3GPP2 C.S0005-E

Version 1.0

Date: September 2009

Upper Layer (Layer 3) Signaling Standard for cdma2000 Spread Spectrum Systems

Revision E

CONTENTS

CONTENTS

CONTENTS

CONTENTS

CONTENTS

CONTENTS

CONTENTS

CONTENTS

CONTENTS

CONTENTS

CONTENTS

CONTENTS

CONTENTS

CONTENTS

CONTENTS

CONTENTS

CONTENTS

CONTENTS

CONTENTS

CONTENTS

CONTENTS

CONTENTS

CONTENTS

CONTENTS

CONTENTS

CONTENTS

CONTENTS

CONTENTS

CONTENTS

CONTENTS

FIGURES

FIGURES

FIGURES

FIGURES

FIGURES

FIGURES

TABLES

TABLES

TABLES

TABLES

TABLES

TABLES

TABLES

TABLES

TABLES

TABLES

FOREWORD AND SCOPE

(This foreword and scope are not part of this specification)

This Specification was prepared by Technical Specification Group C of the Third Generation Partnership Project 2 (3GPP2). This Specification contains the Layer 3 layer of the IMT-2000 CDMA Multi-Carrier Mode, IMT-2000 CDMA MC, also known as cdma2000®[1]. It provides a specification for land mobile wireless systems based upon cellular principles. This Specification includes the capabilities of Telecommunications Industry Association Standard TIA/EIA-95-B.

This Specification provides the Layer 3 Upper Layer signaling protocol architecture and functionality. Other specifications are required to complete the air interface and the rest of the system. Some of these specifications are listed in the References section.

1. General. This section defines the terms and numeric indications used in this document. This section also describes the general signaling architecture.

2. Requirements for Mobile Station CDMA Operation. This section describes the requirements for mobile stations operating in the CDMA mode. A mobile station complying with these requirements will be able to operate with CDMA base stations complying with this document.

3. Requirements for Base Station CDMA Operation. This section describes the requirements for CDMA base stations. A base station complying with these requirements will be able to operate in the CDMA mode with mobile stations complying with this document.

Annex A. **Reserved**.

Annex B. **CDMA Call Flow Examples**. This informative annex provides examples of simple call flows in the CDMA system.

Annex C. Additional CDMA Call Flows. This informative annex provides examples of additional simple call flows in the CDMA system.

Annex D. CDMA Constants. This normative annex contains tables that give specific values for the constant identifiers found in Section 2 and Section 3.

Annex E. CDMA Retrievable and Settable Parameters. This normative annex describes the mobile station parameters that the base station can set and retrieve.

---

[1]cdma2000® is the trademark for the technical nomenclature for certain specifications and standards of the Organizational Partners (OPs) of 3GPP2. Geographically (and as of the date of publication), cdma2000® is a registered trademark of the Telecommunications Industry Association (TIA-USA) in the United States.

Annex F. Mobile Station Database. This informative annex describes a database model that can be used for mobile stations complying with this document.

Annex G. Encryption Call Flows. This informative annex provides examples of extended encryption call flows in the CDMA system.

NOTES

1. Compatibility, as used in connection with cdma2000®[2], is understood to mean: any cdma2000 mobile station is able to place and receive calls in cdma2000 and IS-95 systems. Conversely, any cdma2000 system is able to place and receive calls for cdma2000 and IS-95 mobile stations.
2. Reserved.
3. This compatibility specification is based upon spectrum allocations that have been defined by various governmental administrations.
4. Each mobile station is assigned either a single unique 32-bit binary serial number (ESN) or a single unique 56-bit binary serial number (MEID) that cannot be changed by the subscriber without rendering the mobile station inoperative (see 2.3.2).
5. "Base station" refers to the functions performed in the fixed network. These functions typically distributed among cells, sectors, and mobile switching centers.
6. This standard uses the following verbal forms: "Shall" and "shall not" identify requirements strictly to be followed in order to conform with the standard and from which no deviation is permitted. "Should" and "should not" indicate that one of several possibilities is recommended as particularly suitable, without mentioning or excluding others; that a certain course of action is preferred but not necessarily required; or that (in the negative form) a certain possibility or course of action is discouraged but not prohibited. "May" and "need not" indicate a course of action permissible within the limits of the standard. "Can" and "cannot" are used for statements of possibility and capability, whether material, physical, or causal.
7. Footnotes appear at various points in this specification to elaborate and further clarify items discussed in the body of the specification.
8. Unless indicated otherwise, this document presents numbers in decimal form. Binary numbers are distinguished in the text by the use of single quotation marks.
9. The following operators define mathematical operations:

   $\times$ indicates multiplication.

   $\lfloor x \rfloor$ indicates the largest integer less than or equal to x: $\lfloor 1.1 \rfloor = 1, \lfloor 1.0 \rfloor = 1$.

   $\lceil x \rceil$ indicates the smallest integer greater or equal to x: $\lceil 1.1 \rceil = 2, \lceil 2.0 \rceil = 2$.

   $|x|$ indicates the absolute value of x: $|-17| = 17$, $|17| = 17$.

---

[2] *"cdma2000® is the trademark for the technical nomenclature for certain specifications and standards of the Organizational Partners (OPs) of 3GPP2. Geographically (and as of the date of publication), cdma2000® is a registered trademark of the Telecommunications Industry Association (TIA-USA) in the United States."*

⊕ indicates exclusive OR (modulo-2 addition).

min (x, y) indicates the minimum of x and y.

max (x, y) indicates the maximum of x and y.

x mod y indicates the remainder after dividing x by y: $x \bmod y = x - (y \times \lfloor x/y \rfloor)$.

weight(x) indicates the number of '1's in the binary representation of x.

>> indicates binary right shift operation.

<< indicates binary left shift operation.

10. While communication between Layer 3 and Layer 2 is specified, there is no requirement to implement layering.

11. The following indentation is advised :

"No indentation

- bullet 1
  - bullet 2
    - bullet 3.
      - bullet 4.
        - bullet 5.
          - bullet 6.
            - bullet 7.

REFERENCES

The following standards contain provisions which, through reference in this text, constitute provisions of this Standard. At the time of publication, the editions indicated were valid. All standards are subject to revision, and parties to agreements based on this Standard are encouraged to investigate the possibility of applying the most recent editions of the standards indicated below.

1. C.S0001-E, *Introduction to cdma2000 Standards for Spread Spectrum Systems*.
2. C.S0002-E, *Physical Layer Standard for cdma2000 Spread Spectrum Systems*.
3. C.S0003-E, *Medium Access Control (MAC) Standard for cdma2000 Spread Spectrum Systems*.
4. C.S0004-E, *Signaling Link Access Control (LAC) Standard for cdma2000 Spread Spectrum Systems*.
5. Reserved.
6. Reserved.
7. ANSI T1.607-2000(R2009), Integrated Services Digital Network (ISDN)–Layer 3 Signaling Specification for Circuit Switched Bearer Service for Digital Subscriber Signaling System Number 1 (DSS1), 2009.
8. ANSI TI.610-1998, Generic Procedures for the Control of ISDN Supplementary Services, 1998.
9. ANSI X3.4-1986, Coded Character Set - 7-bit American National Standard Code for Information Interchange, 1992.
10. C.S0010-C, Recommended Minimum Performance Standards for Base Stations Supporting Dual-Mode Spread Spectrum Mobile Stations.
11. C.S0011-C, Recommended Minimum Performance Standards for Dual-Mode Spread Spectrum Mobile Stations.
12. Reserved.
13. TIA/EIA-41-D, Cellular Radiotelecommunications Intersystem Operations.
14. C.S0015-B, Short Message Services for Spread Spectrum Cellular Systems.
15. S.S0053, Common Cryptographic Algorithms.
16. ITU-T Recommendation E.163, Numbering Plan for the International Telephone Service, 1988. Note: merged with E.164.
17. ITU-T Recommendation E.164 (I.331), Numbering Plan for the ISDN Era, 1991.
18. ITU-T Recommendation E.212, Identification Plan for Land Mobile Stations, 1988.
19. ITU-T Recommendation F.69, The International Telex Service–Service and Operational Provisions of Telex Destination Codes and Telex Network Identifications Codes, 1994.

20. ITU-T Recommendation X.121, International Numbering Plan for Public Data Networks, 1992.

21. EIA/TIA/IS-54-B, Cellular System Dual-Mode Mobile Station - Base Station Compatibility Standard, April 1992.

22. Reserved.

23. Interface Specification for Common Cryptographic Algorithms, Rev C, 1997. Contact the Telecommunications Industry Association, Arlington, VA.

24. TIA/EIA-95-B, Mobile Station-Base Station Compatibility Standard for Dual-Mode Spread Spectrum Cellular System, 1999.

25. TIA/EIA/IS-136, 800 MHz TDMA Cellular-Radio Interface-Mobile Station-Base Station Compatibility, December 1994.

26. C.S0016-C, Over-the-Air Service Provisioning of Mobile Stations in Spread Spectrum Systems.

27. TIA/IS-735, Enhancements to TIA/EIA-41-D & TIA/EIA-664 for Advanced Features in Wideband Spread Spectrum Systems, (R2002).

28. TSB16-A, Assignment of Access Overload Classes in the Cellular Telecommunications Services (2001), June 2001. *(Informative reference)*

29. TSB50, User Interface for Authentication Key Entry, March 1993. *(Informative reference)*

30. C.R1001-G, Administration of Parameter Value Assignments for cdma2000 Spread Spectrum Standards, June 2009. *(Informative reference)*

31. C.S0008-0, *Multi-Carrier Specification for Spread Spectrum System on GSM MAP (MC-MAP) – Lower Layers Air Interface*.

32. C.S0007-0, *Direct Spread Specification for Spread Spectrum System on ANSI-41 (DS-41) – Upper Layers Air Interface*.

33. Reserved.

34. ANSI T1.625, Integrated Services Digital Network (ISDN) – Calling Line Identification Presentation and Restriction Supplementary Services.

35. ITU-T X.213, Information Technology – Open Systems Interconnection – Network Service Definition, November 1995.

36. ITU-T X.25, Interface between Data Terminal Equipment (DTE) and Data Circuit-Terminating Equipment (DCE) for terminals operating in the packet mode and connected to public data networks by dedicated circuit, October 1996.

37. Reserved.

38. Federal Information Processing Standards Publication (FIPS PUB) 180-1.

39. N.S0027, Enhanced International Dialing, Calling Number Identification & Callback, Calling Party Category Identification, May 2001

40. C.S0023-C, Removable User Identity Module (R-UIM) for cdma2000 Spread

Spectrum Systems.

41. National Institute of Standards and Technology, FIPS 180-1, "Secure Hash Standard," April 17, 1995

42. C.S0017-A, Data Service Options for Spread Spectrum Systems

43. C.S0022-B, Position Determination Service Standard for Dual Mode Spread Spectrum Systems

44. S.S0078-B Common Security Algorithms.

45. C.S0057-C Band Class Specification for cdma2000 Spread Spectrum Systems.

46. S.S0055-A Enhanced Cryptographic Algorithms.

47. C.S0072-0, Mobile Station Equipment Identifier (MEID) Support for cdma2000 Spread Spectrum Systems.

48. A.S0011-D to A.S0017-D, Interoperability Specification (IOS) for cdma2000 Access Network Interfaces.

49. C.S0087, E-UTRAN – cdma2000 Connectivity and Interworking: Air Interface Specification

    Editor's Note: The above document is a work in progress and should not be referenced unless and until it is approved and published. Until such time as this Editor's Note is removed, the inclusion of the above document is for informational purposes only.

50. C.S0086, WiMAX™ – HRPD Interworking: Air Interface Specification.

    Editor's Note: The above document is a work in progress and should not be referenced unless and until it is approved and published. Until such time as this Editor's Note is removed, the inclusion of the above document is for informational purposes only.

This page intentionally left blank.

1. GENERAL

This section defines the terms and numeric indications used in this document. This section also describes the general signaling architecture.

1.1 Terms and Numeric Information

1.1.1 Terms

Abbreviated Alert. An abbreviated alert is used to remind the mobile station user that previously selected alternative routing features are still active.

AC. See Authentication Center.

Access Attempt. The entire process of sending one message and receiving (or failing to receive) an acknowledgment for that message, consisting of one or more access sub-attempts. See also Access Probe, Access Probe Sequence, and Access Sub-attempt.

Access Channel. A Reverse CDMA Channel used by mobile stations for communicating to the base station. The Access Channel is used for short signaling message exchanges such as call originations, responses to pages, and registrations. The Access Channel is a slotted random access channel.

Access Channel Message. The information part of an access probe consisting of the message body, length field, and CRC.

Access Channel Message Capsule. An Access Channel message plus the padding.

Access Channel Preamble. The preamble of an access probe consisting of a sequence of all-zero frames that are sent at the 4800 bps rate.

Access Channel Request Message. An Access Channel message that is autonomously generated by the mobile station. See also Access Channel Response Message.

Access Channel Response Message. A message on the Access Channel generated to reply to a message received from the base station.

Access Channel Slot. The assigned time interval for an access probe. An Access Channel slot consists of an integer number of frames. The transmission of an access probe is performed within the boundaries of an Access Channel slot.

Access Entry Handoff. The act of transferring reception of the Paging Channel from one base station to another, when the mobile station is transitioning from the *Mobile Station Idle State* to the *System Access State*.

Access Handoff. The act of transferring reception of the Paging Channel from one base station to another, when the mobile station is in the *System Access State* after an Access Attempt.

Access Overload Class. See Overload Class.

Access Probe. One Access Channel transmission consisting of a preamble and a message. The transmission is an integer number of frames in length and transmits one

Access Channel message. See also Access Probe Sequence, Access Sub-attempt, and Access Attempt.

Access Probe Handoff. A handoff that occurs while the mobile station is performing an Access Attempt in the *System Access State*.

Access Probe Sequence. A sequence of one or more access probes on the Access Channel. Other than the reported pilot information, the same Access Channel message content is transmitted in every access probe of an access sub-attempt. See also Access Probe, Access Sub-attempt, and Access Attempt.

Access Sub-attempt. A sequence of one or more access probe sequences on the Access Channel transmitted to one pilot, containing the same message content other than the reported pilot information. See also Access Probe, Access Probe Sequence, and Access Attempt.

Acknowledgment. A Layer 2 response by the mobile station or the base station confirming that a signaling message was received correctly.

Action Time. The time at which the action implied by a message should take effect.

Active Set. The set of pilots associated with the CDMA Channels containing Forward Traffic Channels assigned to a particular mobile station.

Active User Zone. A user zone in which the mobile station makes its presence known via an explicit registration in order to activate tiered service features. See also CDMA Tiered Services, User Zone, and Passive User Zone.

Aging. A mechanism through which the mobile station maintains in its Neighbor Set the pilots that have been recently sent to it from the base station and the pilots whose handoff drop timers have recently expired.

AKA. Authentication and Key Agreement. An authentication procedure that allows mutual authentication of the mobile station and base station.

A-key. A secret, 64-bit pattern stored in the mobile station and HLR/AC. It is used to generate/update the mobile station's Shared Secret Data.

Alternate Interleaver Pattern. An interleaver pattern used for convolutional coded frames for code combining soft handoff for Radio Configuration 12. The alternate interleaver pattern is used by some base stations in the mobile station active set to increase the probability of frame early termination.

ARQ. Automatic Repeat Request. The ARQ is an automatic retransmission protocol that ensures the delivery of encoder packets from the sender to the receiver by retransmission of portions of a turbo encoded packet based on the feedback from the receiver that indicates if the encoder packets have been received and decoded successfully (ACK) or not (NAK).

Assured Mode. Mode of delivery that guarantees that a PDU will be delivered to the peer. A PDU sent in assured mode is retransmitted by the LAC sublayer, up to a maximum number of retransmissions, until the LAC entity at the sender receives an acknowledgment for the PDU. See also Confirmation of Delivery.

Authentication. A procedure used by a base station to validate a mobile station's identity.

Authentication Center (AC). An entity that manages the authentication information related to the mobile station.

Authentication Response (AUTHR). An 18-bit output of the authentication algorithm. It is used, for example, to validate mobile station registrations, originations and terminations.

Autonomous Registration. A method of registration in which the mobile station registers without an explicit command from the base station.

Auxiliary Pilot Channel. A non-data-bearing, direct-sequence spread spectrum signal optionally transmitted by a CDMA base station.

Auxiliary Transmit Diversity Pilot Channel. A pilot channel, counterpart to an Auxiliary Pilot Channel, that is transmitted by a CDMA base station from the non-primary antenna when orthogonal transmit diversity is employed.

AV. Authentication Vector used by AKA.

Bad Frames. Frames classified as insufficient frame quality or as 9600 bps primary traffic only, with bit errors. See also Good Frames.

Band Class. A set of CDMA frequency assignments and a numbering scheme for these channels. See also CDMA Frequency Assignment.

Base Station. A fixed station used for communicating with mobile stations. Depending upon the context, the term base station may refer to a cell, a sector within a cell, an MSC, or other part of the wireless system. See also MSC.

Base Station Authentication Response (AUTHBS). An 18-bit pattern generated by the authentication algorithm. AUTHBS is used to confirm the validity of base station orders to update the Shared Secret Data.

Base Station Random Variable (RANDBS). A 32-bit random number generated by the mobile station for authenticating base station orders to update the Shared Secret Data.

BCMC Service Layer. The functional components residing above the signaling layer (Layer 3) that provide BCMC services.

BCMC TDM Mode. A mode of operation where a time-division multiplexing (TDM) structure is used on a Forward Supplemental Channel (F-SCH) for BCMC content transmission to mobile stations in *Mobile Station Idle State*.

Blank-and-Burst. The preemption of an entire Traffic Channel frame's primary traffic by signaling traffic or secondary traffic. Blank-and-burst is performed on a frame-by-frame basis.

BLOB. Block of Bits.

bps. Bits per second.

Boosted Mode. Mode of operation of Reverse Packet Data Channel where selected data packets are transmitted by the mobile station at a higher power to increase the probability of being received by the base station.

Broadcast Control Channel. A code channel in a Forward CDMA Channel used for transmission of control information or broadcast messages from a base station to a mobile station.

Broadcast Control Channel Number (BCN). A number that identifies the Broadcast Control Channel. BCN number 1 corresponds to the Primary Broadcast Control Channel. BCN numbers 2 through 7 correspond to other Broadcast Control Channels (if any).

Broadcast User Zone. A user zone that is identified to the mobile station by means of broadcast messages. It corresponds to the RF coverage area of a particular set of cells and sectors. See also CDMA Tiered Services and Mobile-Specific User Zone.

Call Disconnect. The process that releases the resources handling a particular call. The disconnect process begins either when the mobile station user indicates the end of the call by generating an on-hook condition or other call-release mechanism, or when the base station initiates a release.

Call History Parameter (COUNT). A modulo-64 event counter maintained by the mobile station and Authentication Center that is used for clone detection.

Call Rescue Soft Handoff. The ability for a mobile station to autonomously add one or more strong pilots to its Active Set in order to minimize the probability of dropped calls.

Candidate Frequency. The frequency, for which the base station specifies a search set, using a *Candidate Frequency Search Request Message*.

Candidate Set. The set of pilots that have been received with sufficient strength by the mobile station to be successfully demodulated, but have not been placed in the Active Set by the base station. See also Active Set, Neighbor Set, and Remaining Set.

CCK. An encryption key derived from the CMEA key. A 128-bit pattern that is the 64-bit CMEA key concatenated with a copy of itself.

CCSH. See Code Combining Soft Handoff.

CDMA. See Code Division Multiple Access.

CDMA Candidate Frequency. The Candidate Frequency specified for a search of CDMA pilots.

CDMA Channel. The set of channels transmitted between the base station and the mobile stations within a given CDMA Frequency Assignment. See also Forward CDMA Channel and Reverse CDMA Channel.

CDMA Channel Number. An 11-bit number that identifies a CDMA Frequency Assignment.

CDMA Frequency Assignment. A 1.23 or 3.69 MHz segment of spectrum. The center of a CDMA frequency assignment is given by a CDMA Channel Number.

CDMA Preferred Set. The set of CDMA channel numbers in a CDMA system corresponding to Frequency Assignments that a mobile station will normally search to acquire a CDMA Pilot Channel. For CDMA cellular systems, the primary and secondary channels comprise the CDMA Preferred Set.

CDMA Tiered Services. System features and services that are based on location, potentially including private networks. User zones establish the availability of services. See also User Zone, Broadcast User Zone, Mobile-Specific User Zone, Active User Zone, and Passive User Zone.

Center SR3 Frequency. The Spreading Rate 3 frequency that has the center frequency assignment.

Chip. See PN Chip.

CIK. An integrity key derived from the CMEA key. A 128-bit pattern that is the 64-bit CMEA key concatenated with a copy of itself.

CK. Cipher Key. A 128-bit pattern produced by AKA that is used for encryption.

CMEA. Cellular Message Encryption Algorithm.

Code Channel. A subchannel of a Forward CDMA Channel or Reverse CDMA Channel. Each subchannel uses an orthogonal Walsh function or quasi-orthogonal function.

Code Combining Soft Handoff (CCSH). A Soft Handoff method for Fundamental Channels on the forward link in Radio Configuration 12 and Supplemental Channels on the forward link in Radio Configurations 4, 5, and 12. For Supplemental Channels using Turbo codes in this mode, certain base stations encode and transmit the data with the default Turbo Encoder, whereas others use the complementary Turbo Encoder. Mobile stations in soft handoff can then combine both codes to achieve lower code rate. For Fundamental Channels and Supplemental Channels using Convolutional codes in this mode certain base stations transmit using the default interleaver pattern, whereas others use an alternate interleaver pattern. Mobile stations in handoff combine transmissions from both base stations to decode the frames earlier.

Code Division Multiple Access (CDMA). A technique for spread-spectrum multiple-access digital communications that creates channels through the use of unique code sequences.

Code Symbol. The output of an error-correcting encoder. Information bits are input to the encoder and code symbols are output from the encoder. See Convolutional Code.

Configuration Change Indicator. A one-bit datum, sent on the Quick Paging Channel. Appearance of the Configuration Change Indicator in the Quick Paging Channel serves to alert a slotted mode mobile station, operating in the idle state, that, after performing an idle handoff, it should monitor the Paging Channel, the Forward Common Control Channel, or the Primary Broadcast Control Channel in order to determine if it should update its stored parameters.

Confirmation of Delivery. A notification sent by the LAC sublayer to Layer 3 at the sender, when the LAC entity at the sender receives the acknowledgment for a specific PDU sent in assured mode.

Convolutional Code. A type of error-correcting code. A code symbol can be considered as modulo 2 the convolution of the input data sequence with the impulse response of a generator function.

CRC. See Cyclic Redundancy Code.

Cyclic Redundancy Code (CRC). A class of linear error detecting codes that generate parity check bits by finding the remainder of a polynomial division. See also Frame Quality Indicator.

dBm. A measure of power expressed in terms of its ratio (in dB) to one milliwatt.

dBm/Hz. A measure of power spectral density. The ratio, dBm/Hz, is the power in one Hertz of bandwidth, where power is expressed in units of dBm.

dBW. A measure of power expressed in terms of its ratio (in dB) to one Watt.

Dedicated Control Channel. A portion of a Traffic Channel (Forward or Reverse) that carries a combination of user data, signaling, and power control information.

Deinterleaving. The process of unpermuting the symbols that were permuted by the interleaver. Deinterleaving is performed on received symbols prior to decoding.

Direct Channel Assignment. A MS-terminated call set-up procedure where the channel assignment can be sent directly to a mobile station without receiving a page response message from the mobile station.

Discontinuous Transmission (DTX). A mode of operation in which a base station or a mobile station switches its transmitter on and off on a particular code channel autonomously. For the case of DTX operation on the Forward Dedicated Control Channel, the Forward Power Control Subchannel is still transmitted.

Distance-Based Registration. An autonomous registration method in which the mobile station registers whenever it enters a cell whose distance from the cell in which the mobile station last registered exceeds a given threshold.

DTMF. See Dual-Tone Multifrequency.

Dual-Tone Multifrequency (DTMF). Signaling by the simultaneous transmission of two tones, one from a group of low frequencies and another from a group of high frequencies. Each group of frequencies consists of four frequencies.

E_b. A measure of the energy in a signal, at some point in a communication system, per information bit conveyed by that signal, or an average value of such energies. Its relevance to system performance is most often expressed by its ratio to additive noise and interference, such as in E_b/N_0 or E_b/I_0. Such ratios are dimensionless, and are usually expressed in dB units.

E_c/I_0. A notation used to represent a dimensionless ratio of the average power of some code-distinguished CDMA signal channel, typically a pilot, to the total power comprised of signal plus interference, within the signal bandwidth. It is usually expressed in dB units.

Effective Radiated Power (ERP). The product of the power supplied to the antenna and its gain relative to a half-wave dipole in a given direction.

EIRP. See Equivalent Isotropic Radiated Power.

Electronic Serial Number (ESN). A 32-bit number assigned by the mobile station manufacturer, uniquely identifying the mobile station equipment.

Encoder Tail Bits. A fixed sequence of bits added to the end of a block of data to reset the convolutional encoder to a known state.

Enhanced Access Channel. A reverse channel used by mobile station for communicating to the base station. The Enhanced Access Channel operates in the Basic Access Mode, and Reservation Access Mode. It is used for transmission of short messages, such as signaling, MAC messages, response to pages, and call originations. It can also be used to transmit moderate-sized data packets.

Enhanced Access Channel Preamble. A non-data bearing portion of the Enhanced Access probe sent by the mobile station to assist the base station in initial acquisition and channel estimation.

Enhanced Access Channel Slot. The assigned time interval for an enhanced access probe. The transmission of an enhanced access probe is performed within the boundaries of an Enhanced Access Channel slot.

Enhanced Access Data. The data transmitted while in the Basic Access Mode on the Enhanced Access Channel or while in the Reservation Access Mode on a Reverse Common Control Channel.

Enhanced Access Header. A frame containing access origination information transmitted immediately after the Enhanced Access Channel Preamble while in the Reservation Access Mode.

Enhanced Access Probe. One Enhanced Access Channel transmission consisting of an Enhanced Access Channel preamble, optionally an Enhanced Access header, and optionally Enhanced Access data. See also Enhanced Access Probe Sequence.

Enhanced Access Probe Sequence. A sequence of one or more Enhanced Access probes on the Enhanced Access Channel. See also Enhanced Access Probe.

Enhanced Rate Adaptation Mode (ERAM). A flexible and variable data rate mode for the Supplemental Channel operation with turbo codes. ERAM is defined on forward link for Radio Configurations 4 and 5, and on the reverse link for Radio Configuration 4. In this mode, lower rate turbo codes are used to match the desired channel interleaver block size instead of pure code symbol repetitions.

Equivalent Isotropically Radiated Power (EIRP). The product of the power supplied to the antenna and the antenna gain in a direction relative to an isotropic antenna.

ERAM. See Enhanced Rate Adaptation Mode.

Erasure Indicator Bit. See [2].

ERP. See Effective Radiated Power.

ESN. See Electronic Serial Number.

ESN_ME. ESN associated with the mobile equipment. See Electronic Serial Number (ESN)

and ME.

EXT_SSEQ. Security sequence number. A 32-bit crypto-sync that is used for encryption, message integrity, or both.

EXT_UIM_ID. An extended (length more than 32-bits) electronic identification (ID) number that is unique to the R-UIM. See [40]. EXT_UIM_ID can be either SF_EUIMID or LF_EUIMID. The mobile station uses SF_EUIMID in place of MEID, with the exception of the MEID_ME information record, when configured with a R-UIM which indicates that SF_EUIMID is to be used in place of MEID (see [40]).

F-ACKCH. Forward Acknowledgment Channel. A channel used by the base station to acknowledge the successful receipt and decoding of the encoder packets (ACK) sent by the mobile station on Reverse Packet Data Channel or the failure to do so (NAK).

f-csch. Forward common signaling logical channel.

f-dsch. Forward dedicated signaling logical channel.

F-GCH. Forward Grant Channel. A channel used by the base station to assign or "grant" the mobile station a certain data rate on the Reverse Packet Data Channel.

F-RCCH. Forward Rate Control Channel. A channel used by the base station to modify the transmission data rate used on the Reverse Packet Data Channel by the mobile station. The data rates possible are allocated in advance.

Fade Timer. A timer kept by the mobile station as a measure of Forward Traffic Channel continuity. If the fade timer expires, the mobile station drops the call.

Fast Call Setup Mode. Any operational mode of a mobile station in the *Mobile Station Idle State* that can improve setup time for call originations or terminations. See Radio Environment Reporting Mode, Reduced Slot Cycle Mode, and Tracking Zone Mode.

Flash. An indication sent on the Reverse CDMA Channel indicating that the user directed the mobile station to invoke special processing.

Foreign NID Roamer. A mobile station operating in the same system (SID) but in a different network (NID) from the one in which service was subscribed. See also Foreign SID Roamer and Roamer.

Foreign SID Roamer. A mobile station operating in a system (SID) other than the one from which service was subscribed. See also Foreign NID Roamer and Roamer.

Forward CDMA Channel. A CDMA Channel from a base station to mobile stations. The Forward CDMA Channel contains one or more code channels that are transmitted on a CDMA Frequency Assignment using a particular pilot PN offset. The code channels are associated with the Pilot Channel, Sync Channel, Paging Channels, Broadcast Control Channel, Forward Common Control Channels, and Traffic Channels. The Forward CDMA Channel always carries a Pilot Channel and may also carry up to one Sync Channel, up to seven Paging Channels, up to seven Broadcast Control Channels, up to seven Forward Common Control Channels and up to the maximum number of channels allowed for the assigned Radio Configuration minus one Traffic Channels, as long as the total number of channels, including the Pilot Channel, is no greater than the maximum number of channels allowed for the assigned Radio Configuration (see [2] section 3.1.3.1.13).

Forward Acknowledgment Channel. A portion of a Forward CDMA Channel used for the transmission of acknowledgments from a base station to multiple mobile stations in response to the data received on the Reverse Packet Data Channel or the Reverse Fundamental Channel.

Forward Common Acknowledgment Channel. A portion of the Forward CDMA Channel used for the transmission of Acknowledgments from a base station to multiple mobile stations in response to the Reverse Supplemental Channel from mobile stations operating with reverse link Radio Configuration 8. The Forward Common Acknowledgment Channel is used by the base station to early terminate Reverse Supplemental Channel frames.

Forward Common Acknowledgment Subchannel. A subchannel on the Forward Common Acknowledgment Channel used by the base station to early terminate the Reverse Supplemental Channel from a mobile station operating with Radio Configuration 8.

Forward Common Control Channel. A control channel used for the transmission of digital control information from a base station to one or more mobile stations.

Forward Dedicated Control Channel. A Dedicated Control Channel that is transmitted on the Forward CDMA Channel.

Forward Fundamental Channel. A Fundamental Channel that is transmitted on the Forward CDMA Channel.

Forward Packet Data Channel. A portion of a Forward Link channel with Spreading Rate 1 used for the transmission of higher-level data from a base station to a mobile station.

Forward Packet Data Control Channel. A portion of a Forward Link channel with Spreading Rate 1 used for the transmission of the control information for the subpacket being transmitted on the Forward Packet Data Channel.

Forward Pilot Channel. A non-data-bearing direct-sequence spread spectrum signal transmitted continuously by each CDMA base station. The Forward Pilot Channel allows a mobile station to acquire the timing of the Forward CDMA Channel, provides a phase reference for coherent demodulation, and provides a means for signal strength comparisons between base stations for determining when to handoff. Different base stations are identified by different pilot PN sequence time phases. See also Pilot PN Sequence, Pilot PN Sequence Offset.

Forward Supplemental Channel. A Supplemental Channel that is transmitted on the Forward CDMA Channel.

Forward Supplemental Code Channel. A Supplemental Code Channel that is transmitted on the Forward CDMA Channel.

Forward Traffic Channel. One or more code channels used to transport user and signaling traffic from the base station to the mobile station. See Forward Fundamental

Channel, Forward Dedicated Control Channel, Forward Packet Data Channel, Forward Supplemental Channel, and Forward Supplemental Code Channel. [3]

Forward Transmit Diversity Pilot Channel. A pilot channel transmitted by a CDMA base station from the non-primary antenna when orthogonal transmit diversity is employed.

Frame. A basic timing interval in the system. For the Sync Channel, a frame is 26.666... ms long. For the Access Channel, the Paging Channel, the Forward Supplemental Code Channel, and the Reverse Supplemental Code Channel, a frame is 20 ms long. For the Forward Supplemental Channel and the Reverse Supplemental Channel, a frame is 20, 40, or 80 ms long. For the Enhanced Access Channel, the Forward Common Control Channel, and the Reverse Common Control Channel, a frame is 5, 10, or 20 ms long. For the Forward Fundamental Channel, Forward Dedicated Control Channel, Reverse Fundamental Channel, and Reverse Dedicated Control Channel, a frame is 5 or 20 ms long. For the Common Assignment Channel, a frame is 5 ms long. For the Broadcast Control Channel, a frame is 40 ms long; the frame may be transmitted once, twice, or four times. For the Forward Packet Data Control Channel and the Forward Packet Data Channel, a frame could be 1.25, 2.5, or 5 ms long. For the Reverse Acknowledgment Channel and the Reverse Channel Quality Indicator Channel, a frame is 1.25 ms long. For the Reverse Packet Data Channel, the Reverse Packet Data Control Channel, the Reverse Request Channel, the Forward Indicator Control Channel, the Forward Grant Channel, and the Forward Acknowledgment Channel, a frame is 10 ms long.

Frame Category. A classification of a received Traffic Channel frame based upon transmission data rate, the frame contents (primary traffic, secondary traffic, or signaling traffic), and whether there are detected errors in the frame.

Frame Early Termination. A method used to terminate transmission of a frame earlier than the nominal length of the frame (20 ms) if the receiver has successfully received the frame. The receiver transmits an acknowledgment to the transmitter following successful reception of the frame.

Frame Number. CDMA System Time, in integer multiples of 20 ms.

Frame Offset. A time skewing of Traffic Channel frames from System Time in integer multiples of 1.25 ms. The maximum frame offset is 18.75 ms.

Frame Quality Indicator. See [2].

Full TMSI. The combination of TMSI_ZONE and TMSI_CODE. The full TMSI is a globally unique address for the mobile station.

Fundamental Channel. A portion of a Traffic Channel that can carry a combination of primary data, secondary data, signaling, and power control information.

Fundicated Channel. Fundamental Channel, Dedicated Control Channel, or both.

---

[3] The Forward Traffic Channel does not include F-PDCCH, F-CPCCH.

Gating Rate Set. This specifies the set of supported reverse pilot gating rates. The base station and the mobile station may support one or more gating rates.

GHz. Gigahertz (10^9 Hertz).

Global Positioning System (GPS). A US government satellite system that provides location and time information to users. See Navstar GPS Space Segment / Navigation User Interfaces ICD-GPS-200 for specifications.

Good Frames. Frames not classified as bad frames. See also Bad Frames.

GPS. See Global Positioning System.

Handoff. The act of transferring communication with a mobile station from one base station to another.

Hard Handoff. A handoff characterized by a temporary disconnection of the Traffic Channel. Hard handoffs occur when the mobile station is transferred between disjoint Active Sets, when the CDMA Frequency Assignment changes, or when the frame offset changes. See also Soft Handoff.

Hash Function. A function used by the mobile station to select one out of N available resources. The hash function distributes the available resources uniformly among a random sample of mobile stations.

HARQ. Hybrid ARQ (Automatic Repeat Request). A "hybrid ARQ" is a combination of an ARQ with an error correction mechanism to repair some errors in the encoder packet.

Highest SR3 Frequency. The SR3 frequency that has the highest frequency assignment.

HLR. See Home Location Register.

Home Location Register (HLR). The location register to which a MIN/IMSI is assigned for record purposes such as subscriber information.

Home System. The wireless system in which the mobile station subscribes for service.

Hopping Pilot Beacon. A pilot beacon that changes CDMA Frequency periodically to simulate multiple base stations operating on different frequencies. The transmission of the hopping pilot beacon is discontinuous on any CDMA Channel.

Idle Handoff. The act of transferring reception of the Paging Channel, Broadcast Control Channel or the Forward Common Control Channel from one base station to another, when the mobile station is in the *Mobile Station Idle State*.

IK. Integrity Key. A 128-bit pattern produced by AKA that is used for integrity protection.

Implicit Registration. A registration achieved by a successful transmission of an origination or page response on the r-csch.

IMSI. See International Mobile Subscriber Identity.

IMSI_M. MIN-based IMSI using the lower 10 digits to store the MIN.

IMSI_O. Operational value of IMSI used by the mobile station for operation with the base station.

IMSI_T. True IMSI not associated with MIN. This could be 15 digits or fewer.

Interleaving. The process of permuting a sequence of symbols.

International Mobile Subscriber Identity (IMSI). A method of identifying stations in the land mobile service as specified in [18].

kHz. Kilohertz (10^3 Hertz).

ksps. Kilo-symbols per second (10^3 symbols per second).

LAC. See Link Access Control.

Layering. A method of organization for communication protocols in which the transmitted or received information is transferred in pipeline fashion, within each station, in well-defined encapsulated data units between otherwise decoupled processing entities ("layers"). A layer is defined in terms of its communication protocol to a peer layer in another entity and the services it offers to the next higher layer in its own entity.

Layer 1. Layer 1 provides for the transmission and reception of radio signals between the base station and the mobile station. Also see Physical Layer.

Layer 2. Layer 2 provides for the correct transmission and reception of signaling messages, including partial duplicate detection. Layer 2 makes use of the services provided by Layer 1. See also Layering and Layer 3.

Layer 3. Layer 3 provides the control messaging for the wireless telephone system. Layer 3 originates and terminates signaling messages according to the semantics and timing of the communication protocol between the base station and the mobile station. Layer 3 makes use of the services provided by Layer 2. See also Layering and Layer 2.

Link Access Control. See LAC. The LAC Sublayer is the upper sublayer of Layer 2. It implements a data link protocol that provides for the correct transport and delivery of signaling messages generated by Layer 3. The LAC Sublayer makes use of the services provided by the Lower Layers (Layer 1 and the MAC Sublayer).

Local Control. An optional mobile station feature used to perform manufacturer-specific functions.

Logical Channel. A communication path between the mobile station and the base station, described in terms of the intended use of, and access to, the transferred data, and direction of transfer. A logical channel can be "mapped" to and from one or more physical channels.

Logical-to-physical Mapping. The technique for forming associations between logical and physical channels.

Long Code. A PN sequence with period $2^{42} - 1$ that is used for scrambling on the Forward CDMA Channel and spreading on the Reverse CDMA Channel. The long code uniquely identifies a mobile station on both the Reverse Traffic Channel and the Forward Traffic Channel. The long code provides limited privacy. The long code also separates multiple Access Channels and Enhanced Access Channels on the same CDMA Channel. See also Public Long Code and Private Long Code.

Long Code Mask. A 42-bit binary number that creates the unique identity of the long code. See also Public Long Code, Private Long Code, Public Long Code Mask, and Private Long Code Mask.

Lowest SR3 Frequency. The SR3 frequency that has the lowest frequency assignment.

LSB. Least significant bit.

LTU. Logical Transmission Unit. One of more Type 3 MuxPDUs with a 16-bit CRC.

MAC. See Medium Access Control.

MAC-I. Message Authentication Code for message integrity. The 32-bit output of the message integrity algorithm that allows the receiver to authenticate the message.

MACI. A 32-bit LAC Layer field that carries either the MAC-I or the UMAC of a signaling message.

Maximal Length Sequence (m-Sequence). A binary sequence of period 2^n - 1, n being a positive integer, with no internal periodicities. A maximal length sequence can be generated by a tapped n-bit shift register with linear feedback.

MC System. Multi Carrier CDMA System (1x and 3x).

MCC. See Mobile Country Code.

Mcps. Megachips per second (10^6 chips per second).

MCSB. See Message Control and Status Block.

ME. Mobile Equipment. The part of a mobile station that does not include the UIM.

Mean Input Power. The total received calorimetric power measured in a specified bandwidth at the antenna connector, including all internal and external signal and noise sources.

Mean Output Power. The total transmitted calorimetric power measured in a specified bandwidth at the antenna connector when the transmitter is active.

Medium Access Control. See MAC. The MAC Sublayer is the lower sublayer of Layer 2. It implements the medium access protocol and is responsible for transport of LAC protocol data units using the services provided by Layer 1.

MEID. See Mobile Equipment Identifier.

MEID_ME. MEID associated with the mobile equipment. See Mobile Equipment Identifier (MEID) and ME.

Message. A data structure that conveys control information or application information. A message consists of a length field (MSG_LENGTH), a message body (the part conveying the information), and a CRC.

Message Body. The part of the message contained between the length field (MSG_LENGTH) and the CRC field.

Message Capsule. A sequence of bits comprising a single message and padding. The padding always follows the message and may be of zero length.

Message Control and Status Block. In this document, a parameter block representing the PCI being transferred between Layer 3 and Layer 2.

Message CRC. The CRC check associated with a message. See also Cyclic Redundancy Code.

Message Field. A basic named element in a message. A message field may consist of zero or more bits.

Message Record. An entry in a message consisting of one or more fields that repeats in the message.

MHz. Megahertz (10^6 Hertz).

MIN. See Mobile Identification Number.

MNC. See Mobile Network Code.

Mobile Country Code (MCC). A part of the E.212 IMSI identifying the home country. See [18].

Mobile Directory Number. A dialable directory number that is not necessarily the same as the mobile station's air interface identification, i.e., MIN, IMSI_M or IMSI_T.

Mobile Equipment Identifier (MEID). A 56-bit number assigned by the mobile station manufacturer, uniquely identifying the mobile station equipment.

Mobile Identification Number (MIN). The 34-bit number that is a digital representation of the 10-digit number assigned to a mobile station.

Mobile Network Code (MNC). A part of the E.212 IMSI identifying the home network within the home country. See [18].

Mobile Protocol Capability Indicator (MPCI). A 2-bit field used to indicate the mobile station's capabilities.

Mobile-Specific User Zone. A user zone that is identified by the mobile station. The mobile station may consider parameters such as the identity of the serving system, cell, and sector, and the geographic location of that station in making the determination. See also CDMA Tiered Services, User Zone, Broadcast User Zone, Active User Zone, and Passive User Zone.

Mobile Station. A station in the Public Wireless Radio Telecommunications Service intended to be used while in motion or during halts at unspecified points. Mobile stations include portable units (e.g., hand-held personal units) and units installed in vehicles. A mobile station consists of two parts – ME and UIM.

Mobile Station Class. A classification of mobile stations based on characteristics such as slotted operation and transmission power. See [12] and Table 2.3.3-1 of this document.

Mobile Station Identification Number (MSIN). A part of the E.212 IMSI identifying the mobile station within its home network. See [18].

Mobile Station Originated Call. A call originating from a mobile station.

Mobile Station Terminated Call. A call received by a mobile station (not to be confused with a disconnect or call release).

ms. Millisecond (10^{-3} second).

MSB. Most significant bit.

MSC. See Mobile Switching Center.

MSIN. See Mobile Subscriber Identification Number.

Multiplex Option. The ability of the multiplex sublayer and lower layers to be tailored to provide special capabilities. A multiplex option defines such characteristics as the frame format, the maximum number of Supplemental Code Channels supported, and the rate decision rules. See also Multiplex Sublayer.

Multiplex Sublayer. One of the conceptual layers of the system that multiplexes and demultiplexes primary traffic, secondary traffic, and signaling traffic.

NAM. See Number Assignment Module.

National Mobile Subscriber Identity (NMSI). A part of the E.212 IMSI identifying the mobile station within its home country. The NMSI consists of the MNC and the MSIN. See [18].

NDSS. See Network Directed System Selection.

Neighbor Set. The set of pilots associated with the CDMA Channels that are probable candidates for handoff. Normally, the Neighbor Set consists of the pilots associated with CDMA Channels that cover geographical areas near the mobile station. See also Active Set, Candidate Set, Remaining Set, and Private Neighbor Set.

Network. A network is a subset of a wireless system, such as an area-wide cellular network, a private group of base stations, or a group of base stations set up to handle a special requirement. A network can be as small or as large as needed, as long as it is fully contained within a system. See also System.

Network Directed System Selection (NDSS). A feature that allows the mobile station to automatically register with a preferred system while roaming, or to be automatically directed by a service provider, typically the home service provider, to a suggested system, regardless of the frequency band class, cellular band, or PCS frequency block.

Network Identification (NID). A number that uniquely identifies a network within a wireless system. See also System Identification.

NEW_KEY_ID. In *ROP*, this is the index of the pending (CIK, CCK) and NEW_SSEQ_H associated with AUTHR. In *Authentication Response Message*, this is the index of the pending (IK, CK) and NEW_SSEQ_H associated with the (RANDA, AUTHN).

NEW_SSEQ_H. The pending 24-bit security sequence number used for encryption and/or integrity protection.

NEW_SSEQ_H_SIG. An 8-bit digital signature of NEW_SSEQ_H computed by $RAND_S$, SSD_A, and NEW_SSEQ_H.

NID. See Network Identification.

NMSI. See National Mobile Subscriber Identity.

Non-Autonomous Registration. A registration method in which the base station initiates registration. See also Autonomous Registration.

Non-Slotted Mode. An operation mode of the mobile station in which the mobile station continuously monitors the Paging Channel, or the Forward Common Control Channel/ Broadcast Control Channel.

ns. Nanosecond (10^{-9} second).

NULL. Any value that is not in the specified range of a field.

Null Traffic Channel Data. One or more frames of a specified data sequence sent at the lowest agreed-upon rate of the negotiated radio configuration. Null Traffic Channel data may be sent when there is no primary, secondary, or signaling traffic available. Null Traffic Channel data serves to maintain the connectivity between the mobile station and the base station.

Number Assignment Module (NAM). A set of MIN/IMSI-related parameters stored in the mobile station.

Numeric Information. Numeric information consists of parameters that appear as numeric fields in messages exchanged by the base station and the mobile station and information used to describe the operation of the mobile station.

Optional Field. A field defined within a message structure that is optionally transmitted to the message recipient.

Order. A type of message that contains control codes for either the mobile station or the base station.

Ordered Registration. A registration method in which the base station orders the mobile station to send registration related parameters.

Orthogonal Transmit Diversity (OTD). An optional method of transmission of the Forward CDMA Channel that uses two antennas, each transmitting a fraction of the code symbols. It can be used to enhance performance in the presence of multipath fading radio propagation.

OTD. See Orthogonal Transmit Diversity

Overhead Message. A message sent by the base station on the Paging Channel or the Primary Broadcast Control Channel to communicate base-station-specific and system-wide information to mobile stations.

Overload Class (OLC). The means used to control system access by mobile stations, typically in emergency or other overloaded conditions. Mobile stations are assigned one (or more) of sixteen overload classes. Access to the CDMA system can then be controlled on a per class basis by persistence values transmitted by the base station.

PACA. Priority Access and Channel Assignment. See PACA Call.

PACA Call. A priority mobile station originated call for which no traffic channel or voice channel was immediately available, and which has been queued for a priority access channel assignment.

Packet. The unit of information exchanged between the service option applications of the base station and the mobile station.

Padding. A sequence of bits used to fill from the end of a message to the end of a message capsule, typically to the end of the frame or half frame. All bits in the padding are '0'.

Paging. The act of seeking a mobile station when a call has been placed to that mobile station.

Paging Channel. A code channel in a Forward CDMA Channel used for transmission of control information and pages from a base station to a mobile station.

Paging Channel Slot. An 80 ms interval on the Paging Channel. Mobile stations operating in the slotted mode are assigned specific slots in which they monitor messages from the base station.

Paging Indicator. A one-bit datum, sent on the Quick Paging Channel. Quick paging indicators are associated with mobile stations, in pairs, via a hashing algorithm. Appearance of both of its indicators in its assigned Quick Paging Channel slot serves to alert a slotted mode mobile station, operating in the idle state, that it should monitor the Paging Channel or the Forward Common Control Channel starting in the next slot. See also Quick Paging Channel.

Parameter-Change Registration. A registration method in which the mobile station registers when certain of its stored parameters change.

Parity Check Bits. Bits added to a sequence of information bits to provide error detection, correction, or both.

Passive User Zone. A user zone in which the implicit registration that takes place at call set-up is sufficient to trigger a change in tiered service features. See also CDMA Tiered Services, User Zone, and Active User Zone.

PCI. See Protocol Control Information.

PCS. See Personal Communications Services.

PCSC. See Personal Communications Switching Center.

PCS System. See Personal Communications Services System.

PDU. See Protocol Data Unit.

Personal Communications Services System. A configuration of equipment that provides PCS radiotelephone services.

Personal Communications Services (PCS). A family of mobile and portable radio communications services for individuals and businesses that may be integrated with a variety of competing networks. Broadcasting is prohibited and fixed operations are to be ancillary to mobile operations.

Personal Communications Switching Center (PCSC). See Mobile Switching Center (MSC).

Physical Channel. A communication path between stations, described in terms of the RF characteristics such as coding, power control policies, etc.

Physical Layer. The part of the communication protocol between the mobile station and the base station that is responsible for the transmission and reception of data. The physical layer in the transmitting station is presented a frame by the multiplex sublayer and transforms it into an over-the-air waveform. The physical layer in the receiving station transforms the waveform back into a frame and presents it to the multiplex sublayer above it.

Pilot Beacon. A transmit-only base station that broadcasts a Pilot Channel, a Sync Channel, optionally a Paging Channel or a Primary Broadcast Control Channel, but no Forward Common Control Channels and Forward Traffic Channels. The mobile station measures the pilot beacon to assist in CDMA hard handoffs and inter-frequency idle-mode handoffs.

Pilot Channel. A non-data-bearing signal transmitted by a CDMA station. See Forward Pilot Channel, Transmit Diversity Pilot Channel, Auxiliary Pilot Channel, Auxiliary Transmit Diversity Pilot Channel, and Reverse Pilot Channel.

Pilot PN Chip. One bit, or bit pair, of a pilot PN sequence, or the time interval corresponding thereto.

Pilot PN Sequence. A pair of modified maximal length PN sequences used to spread the quadrature components of a CDMA Channel.

Pilot PN Sequence Offset. The time offset of a Forward Pilot Channel from CDMA System time, as transmitted by the base station, expressed modulo the pilot period.

Pilot PN Sequence Offset Index. The pilot PN sequence offset in units of 64 PN chips of a Forward Pilot Channel, relative to the zero offset pilot PN sequence.

Pilot Strength. The ratio of pilot power to total power in the signal bandwidth of a CDMA Forward or Reverse Channel. See also $E_C / \mathbf{I_0}$.

Plus Code Dialing. Plus code dialing relieves the user of the need to dial an international access prefix, which may vary between countries and carriers. This capability allows telephony addresses to be entered, received, displayed, stored and transmitted in an international format (full ITU-T E.164 number, including country code). When addresses are entered by a user, the MS user interface can provide an input aid, such as a key marked with a “+” sign, to indicate that the address is international. When displayed by the MS, they can be identified by a visual device, such as a “+” prefix. When received, transmitted, or stored, an international indicator can be included with the address digits. It will be the responsibility of the network to ignore the international indicator when attached to a national number. This allows users to store and dial all phone numbers in a consistent format, which is particularly useful for international travelers. See [39].

PN. Pseudonoise.

PN Chip. One bit in a PN sequence, or the time duration of such a bit. It corresponds to the smallest modulation interval in a CDMA system.

PN Sequence. Pseudonoise sequence. A deterministic, periodic binary sequence having limited statistical similarity to a Bernoulli (coin-tossing).

Power Control Bit. A bit sent on the Forward Power Control Subchannel or Reverse Power Control Subchannel to signal the mobile station or base station to increase or decrease its transmit power.

Power Control Group. A 1.25 ms interval on the Forward Traffic Channel and the Reverse Traffic Channel. See also Power Control Bit.

Power-Down Registration. An autonomous registration method in which the mobile station registers on power-down.

Power Up Function. A method by which the mobile station increases its output power to support location services.

Power-Up Registration. An autonomous registration method in which the mobile station registers on power-up.

PPM. Parts per million.

Preamble. See Access Channel Preamble and Traffic Channel Preamble.

Primary CDMA Channel. A pre-assigned channel in a CDMA Cellular System used by the mobile station for initial acquisition. See also Secondary CDMA Channel.

Primary Paging Channel (CDMA). The default code channel (code channel 1) assigned for paging on a CDMA Channel.

Primary Pilot. One of the three pilots on the Spreading Rate 3 Forward Channels. The primary pilot may be on any one of the SR3 frequencies and may have a higher transmission power comparing to the pilots on the other two SR3 frequencies.

Primary Traffic. The main traffic stream carried between the mobile station and the base station on the Traffic Channel. See also Secondary Traffic and Signaling Traffic.

Primitive. An atomic, well-defined method of transferring data and control information between two adjacent layers and sublayers. Conventionally represented as a function invocation with the data and/or control information as parameters.

Private Long Code. The long code characterized by the private long code mask. See also Long Code.

Private Long Code Mask. The long code mask used to form the private long code. See also Public Long Code Mask and Long Code.

Private Neighbor Set. The set of pilots associated with the private system base stations that are probable candidates for idle handoff. See also Active Set, Neighbor Set, Remaining Set, and CDMA Tiered Services.

Protocol Control Information (PCI). Data passed between adjacent layers in the protocol stack, together with the SDU, to assist a layer to properly encapsulate/decapsulate the SDU. Examples of PCI in this document are the MCSB and the PCSB.

Protocol Data Unit. Encapsulated data communicated between peer layers on the mobile station and base station. Unless specified otherwise, in this document PDU refers to the Layer 3 protocol data unit transferred at the interface between Layer 3 and Layer 2.

Protocol Stack. Conceptual model of the layered architecture for communication protocols (see Layering) in which layers within a station are represented in the order of their numeric designation and requiring that transferred data be processed sequentially by each layer, in the order of their representation. Graphically, the "stack" is drawn vertically, with the layer having the lowest numeric designation at the base.

Pseudo-ESN. A 32 bit number derived from MEID and used in place of ESN.

Public Long Code. The long code characterized by the public long code mask.

Public Long Code Mask. The long code mask used to form the public long code. The mask can contain a permutation of the mobile station's ESN, or the particular mask specified by the base station. The mask also includes the channel number when used for a Supplemental Code Channel. See also Private Long Code Mask and Long Code.

PUF. See Power Up Function.

PUF Attempt. A sequence of PUF probes sent by the mobile station in response to a *Power Up Function Message*.

PUF Probe. One or more consecutive frames on the Reverse Traffic Channel within which the mobile station transmits the PUF pulse.

PUF Pulse. Portion of PUF probe that may be transmitted at elevated output power.

PUF Target Frequency. The CDMA frequency assignment to which the base station directs a mobile station for transmitting the PUF probe.

Punctured Code. An error-correcting code generated from another error-correcting code by deleting (i.e., puncturing) code symbols from the coder output.

QoS. See Quality of Service.

Quality of Service. Set of parameters and procedures associated with a service and/or user, indicating some of the capabilities and constraints related to the delivery of the service to the user.

Quick Paging. A feature that permits mobile stations to further conserve battery power beyond the savings achieved by slotted mode operation. See also Paging Indicator and Configuration Change Indicator.

Quick Paging Channel. An uncoded, on-off-keyed (OOK) spread spectrum signal sent by base stations to inform slotted mode mobile stations, operating in the idle state, whether to monitor the Paging Channel or the Forward Common Control Channel. See also Quick Paging, Paging Indicator, and Configuration Change Indicator.

Quick Paging Channel Slot. An 80 ms interval on the Quick Paging Channel. See also Paging Indicator and Configuration Change Indicator.

Quick Repeats. Additional transmissions of identical copies of a message within a short interval to increase the probability that the message is received correctly.

r-csch. Reverse common signaling logical channel.

r-dsch. Reverse dedicated signaling logical channel.

R-PDCCH. Reverse Packet Data Control Channel. A control channel used for the transmission of control information for the subpacket being transmitted on the Reverse Packet Data Channel and the Mobile Status Indicator Bit.

R-PDCH. Reverse Packet Data Channel. A portion of a Radio Configuration 7 Reverse Traffic Channel which carries higher-level data and control information from a mobile station to a base station.

R-REQCH. Reverse Request Channel. A control channel used by the mobile station to report available power headroom and buffer status.

R-SPICH. Reverse Secondary Pilot Channel. An unmodulated, direct-sequence spread spectrum signal transmitted by a CDMA mobile station in conjunction with certain transmissions on the Reverse Packet Data Channel. The secondary pilot channel provides additional phase reference for the Reverse Packet Data Channel for coherent demodulation and may provide a means for signal strength measurement.

Radio Configuration. A set of Forward Traffic Channel and Reverse Traffic Channel transmission formats that are characterized by physical layer parameters such as transmission rates, modulation characteristics and spreading rate. See [2].

Radio Configuration Class. A group of Radio Configurations. All Radio Configurations, for the Forward Traffic Channel and the Reverse Traffic Channel, are divided into three classes by the types of pre-spreading symbols (BPSK and QPSK) and spreading rates. RC Class 1 consists of RC 1 and RC 2 for the Forward Traffic Channel and the Reverse Traffic Channel. RC Class 2 consists of RC 3, RC 4, and RC 8 of the Reverse Traffic Channel, and RC 3, RC 4, RC 5, RC 11, and RC12 of the Forward Traffic Channel. RC Class 3 consists of RC 5 and RC 6 of the Reverse Traffic Channel, and RC 6, RC 7, RC 8, and RC 9 of the Forward Traffic Channel.

Radio Environment Reporting Mode. A fast call setup mode of the mobile station in the *Mobile Station Idle State*, in which *Radio Environment Messages* are triggered based on a radio environment report pilot list (RER_PILOT_LIST). This mode may be used to assist the base station with direct channel assignment. See also Direct Channel Assignment.

RANDA. The random challenge number contained in an AV.

RC. See Radio Configuration.

Reduced Slot Cycle Mode. A fast call setup mode of the mobile station in which the mobile station operates in the slotted mode with a shorter slot cycle than the registered slot cycle or in the non-slotted mode for the negotiated duration of time. See also Slotted Mode and Non-Slotted Mode.

RES. A *Registration Accepted Order*, *Extended Channel Assignment Message*, or *Security*

Mode Command Message.

Registration. The process by which a mobile station identifies its location and parameters to a base station.

Registration Zone. A collection of one or more base stations treated as a unit when determining whether a mobile station should perform zone-based registration. See also User Zone, with which it should not be confused.

Release. A process that the mobile station and base station use to inform each other of call disconnect.

Remaining Set. The set of all allowable pilot offsets as determined by PILOT_INC, excluding the pilot offsets of the pilots in the Active Set, Candidate Set, and Neighbor Set. See also Active Set, Candidate Set, and Neighbor Set.

Replay Attack. An attempt by a third party to record an over-the-air message and send it later in time so as to mislead the receiver.

Request. A Layer 3 message generated by either the mobile station or the base station to retrieve information, ask for service, or command an action.

Rescue Channel. A Fundamental Channel used for call rescue soft handoff. The Walsh Code is pre-allocated and advertised to the mobile station. In the event that the mobile station loses the Forward Traffic Channel or declares an acknowledgment failure, communication with a new base station can be established on the Rescue Channel.

Response. A Layer 3 message generated as a result of another message, typically a request.

Reverse Acknowledgment Channel. A portion of Reverse CDMA Channel used for the transmission of acknowledgments from the mobile station to the base station in response to the data transmitted on the Forward Packet Data Channel, the Forward Packet Data Control Channel, the Forward Fundamental Channel and the Forward Supplemental Channel.

Reverse Channel Quality Indicator Channel. A portion of Reverse CDMA Channel used by the mobile station to indicate to the base station the quality of the Forward Link Pilot Channel received at the mobile station.

Reverse CDMA Channel. The CDMA Channel from the mobile station to the base station. From the base station's perspective, the Reverse CDMA Channel is the sum of all mobile station transmissions on a CDMA Frequency Assignment.

Reverse Dedicated Control Channel. A Dedicated Control Channel that is transmitted on the Reverse CDMA Channel.

Reverse Fundamental Channel. A Fundamental Channel that is transmitted on the Reverse CDMA Channel.

Reverse Pilot Channel. A non-data-bearing direct-sequence spread spectrum signal transmitted by each CDMA mobile station whenever the Enhanced Access Channel, Reverse Common Control Channel, or Reverse Traffic Channel is enabled. The Reverse Pilot Channel allows a base station to acquire the timing of the Reverse CDMA Channel

and provides a phase reference for coherent demodulation. The Reverse Pilot Channel may be transmitted either continuously or in gated mode.

Reverse Supplemental Channel. A Supplemental Channel that is transmitted on the Reverse CDMA Channel.

Reverse Supplemental Code Channel. A Supplemental Code Channel that is transmitted on the Reverse CDMA Channel.

Reverse Traffic Channel. A Traffic Channel on which data and signaling are transmitted from a mobile station to a base station. The Reverse Traffic Channel is composed of zero or one Reverse Fundamental Channel, zero to seven Reverse Supplemental Code Channels, zero to two Reverse Supplemental Channels, and zero or one Reverse Dedicated Control Channel. [4]

ROP. A *Registration Message*, *Origination Message*, or *Page Response Message*.

Roamer. A mobile station operating in a wireless system (or network) other than the one from which service was subscribed. See also Foreign NID Roamer and Foreign SID Roamer.

R-UIM. Removable UIM.

SAP. See Service Access Point.

SCI. See Synchronized Capsule Indicator Bit.

SDU. See Service Data Unit.

Search Window. The range of PN sequence offsets that a mobile station searches for a pilot.

Search Window Offset. PN sequence offset used by the mobile station to position the search window when searching for a pilot.

Secondary CDMA Channel. A pre-assigned channel in a CDMA Cellular System used by the mobile station for initial acquisition. See also Primary CDMA Channel.

Secondary Traffic. An additional traffic stream that can be carried between the mobile station and the base station on the Traffic Channel. See also Primary Traffic and Signaling Traffic.

Service Access Point. Conceptual point at the interface between two adjacent layers where services are provided to the upper layer and data and protocol information is exchanged between layers.

Service Configuration. The common attributes used by the mobile station and the base station to build and interpret Traffic Channel frames. Service configuration corresponds to the parameters contained in the Service Configuration information record and the Non-negotiable Service Configuration information record. Examples of such parameters

---

[4] The Reverse Traffic Channel does not include R-CQICH, R-ACKCH.

include Forward and Reverse Traffic Channel multiplex options, Forward and Reverse Traffic Channel transmission rates, service option connections, and reverse pilot gating rate.

Service Configuration Synchronization Identifier (SYNC_ID). An identifier assigned by the base station that identifies a specific Service Configuration information record and Non-negotiable Service Configuration information record.

Service Data Unit. Data transferred between adjacent layers in the protocol stack. Unless specified otherwise in this document SDU refers to the Layer 3 service data unit being transferred to/from Layer 2.

Service Negotiation. The procedures used by the mobile station and base station to establish a service configuration. See also Service Option Negotiation.

Service Option. A service capability of the system. Service options may be applications such as voice, data, or facsimile. See [30].

Service Option Connection. A particular instance or session in which the service defined by a service option is used. Associated with a service option connection are a reference, which is used for uniquely identifying the service option connection, a service option, which specifies the particular type of service in use, a Forward Traffic Channel traffic type, which specifies what type of Forward Traffic Channel traffic is used to support the service option connection, and a Reverse Traffic Channel traffic type, which specifies what type of Reverse Traffic Channel traffic is used by the service option connection.

Service Option Connection Reference. A designator used by the base station and mobile station to uniquely identify a particular service option connection.

Service Option Negotiation. The procedures used by the mobile station and base station to establish a service configuration. Service option negotiation is similar to service negotiation, but allows less flexibility for specifying the attributes of the service configuration. See also Service Negotiation.

Service Redirection. The process by which the base station alters the system selection made by a mobile station. It can be used temporarily during maintenance and testing to divert subscribers to an alternate system.

Serving Frequency. The CDMA frequency on which a mobile station is currently communicating with one or more base stations.

Shared Secret Data (SSD). A 128-bit pattern stored in the mobile station (in semi-permanent memory) and known by the base station. SSD is a concatenation of two 64-bit subsets: SSD_A, which is used to support the authentication procedures, and SSD_B, which serves as one of the inputs to the process generating the encryption mask and private long code.

Short Message Services (SMS). A suite of services such as SMS Text Delivery, Digital Paging (i.e., Call Back Number - CBN), and Voice Mail Notification (VMN).

SID. See System Identification.

Signaling Traffic. Control messages that are carried between the mobile station and the base station on the Traffic Channel. See also Primary Traffic and Secondary Traffic.

Silent Re-origination. An autonomous attempt to re-originate a call after the mobile station Layer 3 receives an access attempt failure indication from Layer 2 following a user-initiated origination or a re-origination. Silent re-origination does not apply to any user-programmable capabilities or services, e.g. user-programmable automatic redial.

Slotted Mode. An operation mode of the mobile station in which the mobile station monitors only selected slots on the Paging Channel or the Forward Common Control Channel when in the *Mobile Station Idle State*.

Soft Handoff. A handoff occurring while the mobile station is in the *Mobile Station Control on the Traffic Channel State*. This handoff is characterized by commencing communications with a new base station on the same CDMA Frequency Assignment before terminating communications with an old base station. See also Hard Handoff.

SOM. Start-of-Message bit.

Space Time Spreading (STS). A forward link transmission method which transmits all forward link channel symbols on multiple antennas and spreads the symbols with complementary Walsh or quasi-orthogonal functions.

Spreading Rate. The PN chip rate of the system, defined as a multiple of 1.2288 Mcps.

Spreading Rate 1. A 1.2288 Mcps chip rate-based system using a direct-spread single carrier.

Spreading Rate 3. A 3.6864 Mcps chip rate-based system using three 1.2288 Mcps carriers on the Forward CDMA Channel. The Reverse CDMA Channel uses a 3.6864 Mcps direct-spread carrier.

sps. Symbols per second.

SR. See Spreading Rate.

SR1. See Spreading Rate 1.

SR3. See Spreading Rate 3.

SR3 Frequencies. CDMA frequencies for the three 1.2288 Mcps carriers on the Forward CDMA Channel. SR3 frequencies include the lowest SR3 frequency, the center SR3 frequency, and the highest SR3 frequency.

SR3 Primary Pilot. See Primary Pilot.

SSD. See Shared Secret Data.

SSEQ. Security sequence number. The 8 LSB of the EXT_SSEQ used for an input to encryption functions and as an input to MACI calculations.

Station Class Mark (SCM). An identification of certain characteristics of a mobile station. Classes are defined in [12] and Table 6.3.3-1 of this document.

Subscriber Authentication Key. A secret, 128-bit pattern stored in the mobile station and AC. It is used to generate/update the mobile station's IK, CK and UAK during AKA procedure.

Supplemental Channel. An optional portion of a Traffic Channel (Forward or Reverse Radio Configurations 3 and above) that operates in conjunction with a Fundamental Channel in that Traffic Channel, and (optionally) with other Supplemental Channels to provide higher data rate services.

Supplemental Code Channel. An optional portion of a Traffic Channel (Forward or Reverse Radio Configurations 1 and 2) that operates in conjunction with a Fundamental Channel in that Traffic Channel, and (optionally) with other Supplemental Code Channels to provide higher data rate services. On this channel a combination of primary data, secondary data, or both (but never signaling information) are transmitted.

Symbol. See Code Symbol and Modulation Symbol.

Sync Channel. Code channel 32 in the Forward CDMA Channel which transports the synchronization message to the mobile station.

Sync Channel Superframe. An 80 ms interval consisting of three Sync Channel frames (each 26.666... ms in length).

System. A system is a wireless communications service that covers a geographic area such as a city, metropolitan region, county, or group of counties. See also Network.

System Identification (SID). A number uniquely identifying a wireless system.

System Time. The time reference used by the system. System Time is synchronous to UTC time (except for leap seconds) and uses the same time origin as GPS time. All base stations use the same System Time (within a small error). Mobile stations use the same System Time, offset by the propagation delay from the base station to the mobile station. See also Universal Coordinated Time.

Target Frequency. The CDMA frequency assignment to which the base station directs a mobile station in a handoff using an *Extended Handoff Direction Message*, a *General Handoff Direction Message*, or a *Universal Handoff Direction Message*.

TD. See Transmit Diversity.

Temporary Mobile Subscriber Identity (TMSI). A temporary mobile station identification assigned by the base station.

Tracking Zone Mode. A fast call setup mode of the mobile station in the *Mobile Station Idle State*, in which *Radio Environment Messages* are triggered based on the tracking zone identifier (TKZ_ID) broadcast by the base station and hysteresis criteria. This mode may be used to assist the base station with direct channel assignment. See also Direct Channel Assignment.

Timer-Based Registration. A registration method in which the mobile station registers whenever a counter reaches a predetermined value. The counter is incremented an average of once per 80 ms period.

Time Reference. A reference established by the mobile station that is synchronous with the earliest arriving multipath component used for demodulation.

TMSI. See Temporary Mobile Subscriber Identity.

TMSI Zone. The administrative zone that allows the TMSI to be reused. The TMSI_CODE has to be unique within a TMSI zone but may be reused in a different TMSI zone. The TMSI zone is identified by the field TMSI_ZONE.

Traffic Channel. A communication path between a mobile station and a base station used for user and signaling traffic. The term Traffic Channel implies a Forward Traffic Channel and Reverse Traffic Channel pair. See also Forward Traffic Channel and Reverse Traffic Channel.

Traffic Channel Preamble. For RC1 and RC2, a sequence of all-zero frames that is sent by the mobile station on the Reverse Traffic Channel as an aid to Traffic Channel acquisition. For RC3 to RC6 inclusive, the traffic preamble is the ungated transmission of the Reverse Pilot.

Transmit Diversity. See Orthogonal Transmit Diversity and Space Time Spreading.

UAK. UIM Authentication Key. A 128-bit pattern produced by AKA that is used for authentication of the R-UIM.

UIM. User Identity Module.

UIM_ID. A 32-bit electronic identification (ID) number that is unique to the R-UIM. The mobile station uses UIM_ID in place of ESN, with the exception of the ESN_ME information record, when configured with a R-UIM which indicates that UIM ID is to be used (see [40]).

UMAC. A 32-bit output of the UMAC algorithm computed by UIM based on MAC-I.

Unassured Mode. Mode of delivery that does not guarantee that a PDU will be delivered to the peer. The LAC entity at the receiver does not acknowledge a PDU sent in unassured mode.

Unique Challenge-Response Procedure. An exchange of information between a mobile station and a base station for the purpose of confirming the mobile station's identity. The procedure is initiated by the base station and is characterized by the use of a challenge-specific random number (i.e., RANDU) instead of the random variable broadcast globally (RAND).

Unique Random Variable (RANDU). A 24-bit random number generated by the base station in support of the Unique Challenge-Response procedure.

Universal Coordinated Time (UTC). An internationally agreed-upon time scale maintained by the Bureau International de l'Heure (BIH) used as the time reference by nearly all commonly available time and frequency distribution systems i.e., WWV, WWVH, LORAN-C, Transit, Omega, and GPS.

User Zone. An area within which CDMA Tiered Services may be provided. It may correspond to an RF coverage area, or it may be established independent of RF topology. User Zones are classified as broadcast versus mobile-specific, and as active versus

passive. See Broadcast User Zone, Mobile-Specific User Zone, Active User Zone, and Passive User Zone. See also Registration Zone, with which it should not be confused.

User Zone Registration. An autonomous registration method in which the mobile station registers when it selects an active user zone while in the Idle State. See also Zone-Based Registration, with which it should not be confused.

Upper Layers. General reference to Layer 3 and the layers above it.

User Zone Exit parameter. A parameter used by the mobile station to determine if it should exit a User Zone.

UTC. Universal Temps Coordiné. See Universal Coordinated Time.

Voice Privacy. The process by which user voice transmitted over a CDMA Traffic Channel is afforded a modest degree of protection against eavesdropping over the air.

Walsh Chip. See [2].

Walsh Function. One of 2^N time orthogonal binary functions (note that the functions are orthogonal after mapping '0' to 1 and '1' to -1).

Wireless Local Loop. Wireless alternative access mechanism to provide standard telecommunication services using standard wireline terminal via a radio link between the network and customer premises equipment.

WLL. See Wireless Local Loop.

Zone-Based Registration. An autonomous registration method in which the mobile station registers whenever it enters a zone that is not in the mobile station's zone list. See also User Zone Registration, with which it should not be confused.

Zone Timer. A timer used by the mobile station to remove outdated entries from its list of zones in which it has previously registered.

µs. Microsecond (10^{-6} second).

1.1.2 Numeric Information

Numeric information is used to describe the operation of the mobile station. The following subscripts are used to clarify the use of the numeric information:

- "s" indicates a value stored in a mobile station's temporary memory.
- "sv" indicates a stored value that varies as a mobile station processes various tasks.
- "sl" indicates the stored limits on values that vary.
- "r" indicates a value received by a mobile station over a CDMA Forward Channel.
- "p" indicates a value set in a mobile station's permanent security and identification memory.
- "s-p" indicates a value stored in a mobile station's semi-permanent security and identification memory.

1.1.2.1 Reserved

1.1.2.2 CDMA Numeric Information

The following are internal values that are stored by the mobile station in temporary memory that are not sent over the air. See Annex F for values stored by the mobile station in permanent and semi-permanent memory.

1XRL_FREQ_OFFSET$_S$ – Frequency offset of the 1X reverse link.

A41_SYS_PAR_MSG_SEQ$_S$ – *ANSI-41 System Parameters Message* sequence number.

ACC_CHAN$_S$ – Number of Access Channels supported by the current Paging Channel.

ACC_ENT_HO_ORDER$_S$ – Access entry handoff permitted from the *Mobile Station Order and Message Processing Operation* of the *Mobile Station Idle State*.

ACCESS_ENTRY_HO$_S$ – Idle handoff permitted when entering the *System Access State*.

ACCESS_HO$_S$ – Handoff permitted after performing an access attempt while the mobile station is in the *System Access State*.

ACCESS_HO_ALLOWED$_S$ – Handoff permitted to the corresponding neighbor base station while in the *System Access State*.

ACCESS_HO_LIST – List of pilots to which access handoff or access probe handoff is permitted.

ACC_HO_LIST_UPD$_S$ – Access handoff list update permitted indicator.

ACCESS_HO_MSG_RSP$_S$ – Access handoff permitted in the *System Access State* between the time that the mobile station receives a message and responds to that message.

ACCESS_PROBE_HO$_S$ – Access probe handoff permitted during an access attempt in the *Mobile Station Origination Attempt Substate* or the *Page Response Substate*.

ACC_MSG_SEQ$_S$ – Last received *Access Parameters Message* or *Enhanced Access Parameters Message* sequence number.

ACC_PROBE_HO_OTHER_MSG$_S$ – Access probe handoff permitted for Access Channel messages other than the *Origination Message*, *Reconnect Message*, and the *Page Response Message*.

ACCT_INCL_EMG$_S$ – Access Control based on Call Type (ACCT) applies to emergency calls indicator.

ACCT_SO_GRP_LIST – List of service option groups that have Access Control based on Call Type (ACCT) enabled.

ACCT_SO_LIST – List of individual service options that have Access Control based on Call Type (ACCT) enabled.

ACH_ACC_TMO$_S$ – Access Channel acknowledgment timeout, in units of 80 ms.
ACK_WAITING$_S$[i] – Acknowledgment status indicator for message sequence number i. Set to YES if an acknowledgment is pending for the message; otherwise, set to NO.

ADD_INTERCEPT$_S$ – The intercept in the inequality criterion for adding a pilot to the Active Set.

ADD_PLCM_FOR_FCH_39$_S$ – The 39 least significant bits of the additional Public Long Code Mask for the forward Fundamental Channel.

ADD_PLCM_FOR_FCH_TYPE$_S$ – Additional Public Long Code Mask for forward Fundamental Channel type indicator.

AGE$_S$ – Neighbor list age. For each pilot in the Neighbor Set, the mobile station increments this counter each time a *Neighbor List Update Message* or an *Extended Neighbor List Update Message* is received. When AGE$_S$ exceeds NGBHR_MAX_AGE, the pilot is deleted from the Neighbor Set.

ALIGN_TIMING_USED$_S$ – Indicates whether the mobile station aligns the times of visits away from the Serving Frequency, as requested by the base station, in the periodic search procedures.

ASSIGNED_QPAGECH$_S$ – Assigned Quick Paging Channel number.

AUTH$_S$ – Current authentication mode.

AUTO_FCSO_ALLOWED$_S$ – Base station support of autonomous *Fast Call Setup Order* indicator.

AUTO_MSG_INTERVAL – Autonomous message interval.

AUTO_MSG_SUPPORTED – Autonomous message supported indicator.

BAD_FRAMES$_S$ – Forward Fundamental Channel bad frames count. The number of received bad Forward Fundamental Channel frames.

BAND_SUBCLASS_IND_REC – Band subclass indicator record. This record specifies the band subclasses that the base station requires the mobile station to report whether it supports.

BASE_CLASS$_S$ – Base station class of the current base station.

BASE_ID$_S$ – Base station identification of the current base station.

BASE_LAT$_S$ – Latitude of the current base station, in units of 0.25 seconds.

BASE_LONG$_S$ – Longitude of the current base station, in units of 0.25 seconds.

BCMC_FLOW_LIST$_S$[i] – BCMC Flow Information. This is an array that contains information corresponding to each BCMC flow being transmitted by the base station in this sector:

- BCMC_FLOW_ID - BCMC flow identifier.
- REGISTRATION_REQ_FLAG – Registration required flag.
- AUTH_SIGNATURE_REQ_IND – Authorization signature required indication.
- BCMC_FLOW_ON_TRAFFIC_IND – BCMC flow on traffic channel supported indicator.

- BCMC_FLOW_ON_IND – BCMC flow On indicator.
- LPM_INFO[j] **-** For each BCMC_FLOW_ID, one or more Logical-to-Physical Mapping entries:
  - FSCH_ID - Forward Broadcast Supplemental Channel identifier.
  - TDM_USED_IND - TDM used indicator.
  - TDM_MASK - TDM mask.
  - TDM_SUPER_PERIOD_MASK - TDM super period mask.
  - TDM_MEGA_PERIOD_MASK - TDM mega period mask.
  - BSR_ID - BCMC Service Reference identifier.
  - NGHBR_INFO[k] - For each Logical-to-Physical Mapping entries, information on one or more neighbor base stations:
    - NGHBR_PN - Neighbor pilot PN sequence offset index.
    - NGHBR_BCMC_CONFIG - Neighbor BCMC Configuration.
    - NGHBR_FSCH_BAND_CLASS - Neighbor band class of the Forward Broadcast Supplemental Channel.
    - NGHBR_FSCH_CDMA_FREQ - Neighbor Frequency assignment of the Forward Broadcast Supplemental Channel.
    - NGHBR_FSCH_CODE_CHAN - Neighbor Forward Broadcast Supplemental Channel Code Channel Index.
    - NGHBR_FSCH_PLCM - Neighbor Public Long Code Mask of the Forward Broadcast Supplemental Channel.
    - NGHBR_FSCH_MUX_OPTION - Neighbor Multiplex Option of the Forward Broadcast Supplemental Channel.
    - NGHBR_FSCH_RC - Neighbor Radio configuration of the Forward Broadcast Supplemental Channel.
    - NGHBR_FSCH_CODING - Neighbor Coding Type of the Forward Broadcast Supplemental Channel.
    - NGHBR_FSCH_OUTERCODE_RATE - Neighbor outer code rate of the Forward Broadcast Supplemental Channel.

- NGHBR_FSCH_OUTERCODE_OFFSET - Neighbor outer coding buffer offset of the Forward Broadcast Supplemental Channel.
- NGHBR_FSCH_NUM_BITS_IDX - Neighbor number of information bits index of the Forward Broadcast Supplemental Channel.
- NGHBR_FSCH_FRAME_40_USED - Neighbor Forward Broadcast Supplemental Channel 40ms frame used indicator.
- NGHBR_FSCH_FRAME_80_USED - Neighbor Forward Broadcast Supplemental Channel 80ms frame used indicator.

BCMC_RETRY_DELAY_LISTs[i] – BCMC Retry Delay List. This is an array that contains retry time corresponding to each BCMC flow rejected with BCMC Reason indicating RETRY_LATER:

- BCMC_FLOW_ID - BCMC flow identifier.
- RETRY_DELAY – Retry time for this BCMC flow.

BEGIN_PREAMBLE$_S$ – A stored variable in the mobile station that contains the size of the preamble that shall be transmitted on a Reverse Supplemental Code Channel at the beginning of a Reverse Supplemental Code Channel transmission.

BKOFF$_S$ – Access Channel probe sequence backoff range.

BRAT$_S$ – Data rate of the Primary Broadcast Control Channel.

BSPM_MSG_SEQs – *BCMC Service Parameters Message* sequence number.

BSPM_WAIT_TIME – The maximum duration the mobile station waits to receive a BCMC Service Parameters Message after sending a Registration Message requesting a BCMC flow.

BYPASS_ALERT_ANSWER$_S$ – Mobile station termination bypass indicator. This is set to '1' if the mobile station is to bypass the *Waiting for Order Substate* and the *Waiting for Mobile Station Answer Substate,* and proceed directly to the *Conversation Substate* when Layer 3 receives a *forward dedicated channel-acquired* indication from Layer 2.

CAND_BAND_CLASS_REC – Candidate band class record. This record specifies the band classes that the base station requires the mobile station to report whether it supports.

CCSH_ENCODER_ACTION_TIME$_S$ - Specifies the time at which Code Combining Soft Handoff Turbo Encoder swapping takes effect.

CDMABAND$_S$. CDMA band class. The CDMA band class currently used by the mobile station.

CDMACH$_S$ – CDMA Channel number. The CDMA Channel number currently used by the mobile station.

CDMA_OFF_TIME_REP_SUP_INDs **–** CDMA off time report supported indicator.

CDMA_OFF_TIME_REP_THRESHOLDs **–** CDMA off time report threshold.

CF_CDMABAND$_S$ – Candidate Frequency CDMA band class. The CDMA band class specified in the *Candidate Frequency Search Request Message*.

CF_CDMACH$_S$ – Candidate Frequency CDMA Channel number. The CDMA Channel number specified in the *Candidate Frequency Search Request Message*.

CF_PILOT_INC$_S$ – PILOT_INC to be used by the mobile station after an inter-frequency hard handoff to the CDMA Candidate Frequency is successfully completed.

CF_SEARCH_PRIORITY_INCL$_S$ – Candidate Frequency neighbor pilots' search priority included indicator.

CF_SRCH_OFFSET_INCL$_S$ – Candidate Frequency neighbor pilot search window offset included indicator.

CF_SRCH_WIN_NGHBR_INCL$_S$ – Candidate Frequency neighbor pilots' search window included indicator.

CF_SRCH_WIN_N$_S$ – Search window size for the Candidate Frequency Search Set.

CF_SRCH_WIN_R$_S$ – Search window size to be used for the Remaining Set after an inter-frequency hard handoff to the CDMA Candidate Frequency is successfully completed.

CF_T_ADD$_S$ – Pilot detection threshold to be used on the CDMA Candidate Frequency. The stored value is a positive value in units of 0.5 dB.

CH_INDs – A two-bit physical channel indicator, based on the currently established physical channels. The least significant bit denotes the Fundamental Channel, and the most significant bit denotes the Dedicated Control Channel.

CHAN_LST_MSG_SEQ$_S$ – *CDMA Channel List Message* sequence number.

CHM_SUPPORTED$_S$ – Indicates whether the base station supports Control Hold Mode operation.

CODE_CHAN_LIST – Code Channel List. A descriptive structure used to manage the Forward Fundamental Channel, and Forward Supplemental Code Channels, if any, associated with the mobile station's Active Set.

COMPLETE_PUF_FRAME$_S$ – Number of power control groups required to make the PUF probe an integer number of frames.

COMPLETE_SEARCH$_S$ – Flag to indicate if the mobile station is to complete the search of the Candidate Frequency Search Set after it has determined that the inter-frequency handoff attempt to the CDMA Candidate Frequency is unsuccessful.

CONFIG_MSG_SEQ$_S$ – Current message sequence number for the *System Parameters Message, Neighbor List Message, Extended Neighbor List Message, General Neighbor List Message, CDMA Channel List Message, Extended System Parameters Message, Global Service Redirection Message, Private Neighbor List Message, User Zone Identification Message, Extended CDMA Channel List Message, Extended Global Service Redirection Message, MC-RR Parameters Message, ANSI-41 System Parameters Message*.

COUNTER_ENABLED$_S$ – Timer-based registration indicator. Set to YES if timer-based registration is enabled; otherwise, set to NO.

C_SIG_ENCRYPT_MODE$_S$ – Common Channel signaling message encryption mode.

CS_SUPPORTED$_S$ – Base station Concurrent Services supported indicator. This 1-bit field is set to '1' if the base station supports concurrent connection of at least two services that use either Primary or Secondary traffic type.

CURR_ACC_MSG_SEQ – Current *Access Parameters Message* or *Enhanced Access Parameters Message* sequence number.

CURRENT_ACTIVE_PILOT$_S$ – Identifies the current pilot in the Active Set during an access attempt.

CURRENT_PUF_PROBE$_S$ – Number of the next PUF probe to be transmitted within the PUF attempt.

DAYLT$_S$ – Daylight Savings Time indicator.

DCCH_BAD_FRAMES$_S$ – Forward Dedicated Control Channel bad frames count. The number of received bad Forward Dedicated Control Channel frames.

DCCH_TOT_FRAMES$_S$ – Total Forward Dedicated Control Channel frames received. The total number of received Forward Dedicated Control Channel frames, counted for Forward Traffic Channel power control.

DECORR – Hashing function input used to decorrelate hashing function applications for the same mobile station.

DEFAULT_CONFIG$_S$ – Mobile station current default configuration.

DELETE_FOR_TMSI$_S$ – A storage variable in the mobile station that indicates whether the mobile station should delete its current TMSI if the TMSI was assigned in a different TMSI zone.

DIFF_RX_PWR_THRESH$_S$ – Threshold for the difference between the received power on the Serving Frequency and the received power on the CDMA Candidate Frequency for the mobile station to search for pilots on the CDMA Candidate Frequency.

DIRECT_CH_ASSIGN_RECOVER_IND$_S$ – Direct Channel Assignment Recover Indicator.

DISTANCE – Distance from registered base station to current base station, used for distance-based registration.

DROP_INTERCEPT$_S$ – The intercept in the inequality criterion for dropping a pilot from the Active Set.

D_SIG_ENCRYPT_MODE$_S$ – Dedicated Channel signaling message encryption mode.

EACH_ACC_TMO$_S$ – Enhanced Access Channel acknowledgment timeout, in units of 20 ms.

EACH_SLOT$_S$ – See [2].

EACH_SLOT_OFFSET1$_S$ – See [2].

EACH_SLOT_OFFSET2$_S$ – See [2].

EARLY_RL_TRANSMIT_IND$_S$ – The early reverse link transmission flag indicates whether,

upon channel assignment, the mobile station is allowed to enable its transmitter and transmit the preamble prior to receiving sufficient energy on the forward link.

EC_I0_THRESH$_S$ – Pilot E_C / $\mathbf{I_0}$ threshold used for system reselection.

EC_THRESH$_S$ – Pilot power threshold used for system reselection.

ENC_KEY_SIZE$_S$ – The key size used for signaling and user information encryption on common channel and dedicated channel.

ENC_KEY[*j*] – An array of encryption keys for signaling and user information encryption on common channel and dedicated channel, where *j* is the key identifier that ranges from '00' to '11'.

SSEQ[5] – An 8-bit temporary variable for encryption/decryption and message integrity.

ENCRYPT_MODE$_S$ – Current message encryption mode.

EXCL_P_REV_MS – Exclude from redirection by MOB_P_REV indicator.

EXT_CHAN_LST$_S$ – *Extended CDMA Channel List Message* sent indicator.

EXT_CHAN_LST_MSG_SEQ$_S$ – *Extended CDMA Channel List Message* sequence number.

EXT_NGHBR_LST_MSG_SEQ$_S$ – Extended Neighbor List Message sequence number.

EXT_PREF_MSID_TYPE$_S$ – Extended preferred mobile station identifier field type.

RX_EXT_SSEQ[*i*][*j*][6] – An array of 32-bit crypto-sync counters used for encryption and message integrity, where *i* = 0 is for unassured messages and *i* = 1 is for assured messages, where *j* is the key identifier that ranges from '00' to '11'.

TX_EXT_SSEQ[*i*][*j*][7] – An array of 32-bit crypto-sync counters used for encryption and message integrity, where *i* = 0 is for unassured messages and *i* = 1 is for assured messages, where *j* is the key identifier that ranges from '00' to '11'.

EXT_SSEQ[8] – A 32-bit temporary variable for encryption and message integrity.

INT_KEY[*j*] – An array of 128-bit integrity keys for message integrity, where *j* is the key identifier that ranges from '00' to '11'.

KEY_ID – A 2-bit index of INT_KEY[.], ENC_KEY[.], TX_EXT_SSEQ[.][.], and RX_EXT_SSEQ[.][.] that are "in use". The values '00' to '01' are used to index 2G keys and security sequence numbers. The values '10' to '11' are used to index 3G keys and security sequence numbers.

EXT_GLOBAL_REDIRECT$_S$ – *Extended Global Service Redirection Message* sent indicator.

---

[5] Formerly called ENC_SEQ.

[6] Formerly called EXT_DECRYPT_SEQ[*i*].

[7] Formerly called EXT_ENCRYPT_SEQ[*i*].

[8] Formerly called EXT_ENC_SEQ[*i*].

EXT_GLOB_SERV_REDIR_MSG_SEQ$_S$ – *Extended Global Service Redirection Message* sequence number.

EXT_SYS_PARAMETER$_S$ – *Extended System Parameters Message* sent indicator.

EXT_SYS_PAR_MSG_SEQs **–** Extended System Parameters Message sequence number.

FBSCH_LIST$_S$[i] – Forward Broadcast Supplemental Channel information. This is an array that contains information corresponding to each Forward Supplemental Channel transmitted by the base station:

- FSCH_ID - Forward Broadcast Supplemental Channel identifier.
- FSCH_BAND_CLASS - Band class of the Forward Broadcast Supplemental Channel.
- FSCH_FREQ - Frequency assignment of the Forward Broadcast Supplemental Channel.
- FSCH_CODE_CHAN - Code Channel index of the Forward Broadcast Supplemental Channel.
- FSCH_PLCM – Public Long Code Mask of the Forward Broadcast Supplemental Channel
- FSCH_MUX_OPTION - Multiplex Option of the Forward Broadcast Supplemental Channel
- FSCH_RC - Radio configuration of the Forward Broadcast Supplemental Channel.
- FSCH_CODING - Coding Type of the Forward Broadcast Supplemental Channel.
- FSCH_OUTERCODE_RATE - Outer code rate of the Forward Broadcast Supplemental Channel.
- FSCH_OUTERCODE_OFFSET - Outer coding buffer offset of the Forward Broadcast Supplemental Channel.
- FSCH_NUM_BITS_IDX - Number of information bits index of the Forward Broadcast Supplemental Channel.
- FSCH_FRAME_40_USED - Forward Broadcast Supplemental Channel 40ms frame used indicator.
- FSCH_FRAME_80_USED - Forward Broadcast Supplemental Channel 80ms frame used indicator.
- TDM_STRUCTURE_IND - Forward Broadcast Supplemental Channel TDM structure used indicator.

- TDM_SLOT_LENGTH - Forward Broadcast Supplemental Channel TDM slot length
- TDM_SUPER_PERIOD_MASK_LEN - TDM super period mask length indicator.
- TDM_MEGA_PERIOD_MASK_LEN - TDM mega period mask length indicator.

$FCCCH_S$ – Current Forward Common Control Channel number.

$FIRST\_ACTIVE\_PILOT_S$ – While the mobile station is in the *System Access State*, identifies the pilot to which the first access probe was transmitted, upon entering the *System Access State*.

$FIXED\_NUM\_PREAMBLE_S$ – Traffic Channel preamble length for fixed preamble transmission.

$FIXED\_PREAMBLE\_TRANSMIT\_IND_S$ – The fixed preamble transmission flag indicates whether the mobile station is allowed to enter the *Traffic Channel Substate* of the *Mobile Station Control on the Traffic Channel State*, after sending the number of preambles specified in *Extended Channel Assignment Message*.

$FOR\_ACKCH\_ASSIGNED_S$ – Forward Acknowledgment Channel assignment indicator.

$FOR\_ACKCH\_COMB\_SEL_S$ – Forward Acknowledgment Channel combining method selector.

$FOR\_ACKCH\_MODE_S$ – Forward Acknowledgment Channel Mode.

$FOR\_ACKCH\_WALSH\_INDEX_S$ – Forward Acknowledgment Channel Walsh Code index.

$FOR\_ACKSCH\_INDEX_S$ – Forward Acknowledgment Channel subchannel index.

$FOR\_CPCCH\_RATE_S$ – Forward Common Power Control Channel Rate.

$FOR\_DCCH\_MUX\_OPTION_S$ – Forward Dedicated Control Channel Multiplex Option.

$FOR\_DURATION_S$ – A stored variable in the mobile station that contains the duration (in units of 80 ms) of a forward Supplemental Code Channel transmission that begins at time $FOR\_START\_TIME_S$.

$FOR\_FCH\_MUX\_OPTION_S$ – Forward Fundamental Channel Multiplex Option.

$FOR\_FCH\_RC_S$ – Forward Fundamental Channel Radio Configuration.

$FOR\_FRAME\_40\_MAX\_RATE_S$ – The maximum data rate for the mobile station's transmission at 40 ms frame length on the Forward Supplemental Channel.

$FOR\_FRAME\_80\_MAX\_RATE_S$ – The maximum data rate for the mobile station's transmission at 80 ms frame length on the Forward Supplemental Channel.

$FOR\_GCH\_ASSIGNED_S$ – Forward Grant Channel assigned indicator.

$FOR\_GCH\_WALSH\_INDEX_S$ – Forward Grant Channel Walsh Index. The Walsh index of the Forward Grant Channel assigned to a mobile station.

$FOR\_LINKED\_HDM\_SEQ_S$ – Storage variable containing the most recent forward sequence number of the *General Handoff Direction Message* to which a *Supplemental Channel*

Assignment Message forward assignment was linked.

FOR_NID_REG$_S$ – Foreign NID roamer autonomous registration enable.

FOR_RCCH_ASSIGNED$_S$ – Assigned Forward Rate Control Channel. An on or off indicator used to determine if Forward Rate Control Channel is assigned or not.

FOR_RCCH_MODE$_S$ – Forward Rate Control Channel mode.

FOR_RCCH_REPETITION$_S$ – Forward Rate Control Channel Subchannel repetition factor.

FOR_RCCH_WALSH_INDEX$_S$ – Forward Rate Control Channel Walsh code.

FOR_RCSCH_INDEX$_S$ – Forward Rate Control Channel subchannel index.

FOR_PDCH_SUPPORTED$_S$ – Forward Packet Data Channel supported indicator.

FOR_PDCH_INCL$_S$ – Forward Packet Data Channel assigned indicator for each pilot in the active set.

FOR_RC$_S$ – Forward Channel Radio Configuration.

FOR_SCH_CC_INDEX$_S$ – Supplemental code channel index used on the Supplemental Channel.

FOR_SCH_DURATION$_S$ – A stored variable in the mobile station, which contains the duration of a forward Supplemental Channel transmission, which begins at time FOR_SCH_START_TIME$_S$.

FOR_SCH_FRAME_LENGTH$_S$ – The Forward Supplemental Channel frame length.

FOR_SCH_RATE$_S$ – The rate of the Forward Supplemental Channel.

FOR_SCH_START_TIME$_S$ – A stored variable in the mobile station which contains the System Time, in units of time specified by START_TIME_UNIT$_S$, (modulo 32) at which the mobile station shall start (or resume) processing Forward Supplemental Channels.

FOR_SID_REG$_S$ – Foreign SID roamer autonomous registration enable.

FOR_START_TIME$_S$ – A stored variable in the mobile station that contains the System Time, in units of 80 ms, (modulo 64) at which the mobile station shall start (or resume) processing Forward Supplemental Code Channels.

FPC_DCCH_CURR_SETPT$_S$ – Current power control subchannel outer loop setpoint for the Forward Dedicated Control Channel.

FPC_DCCH_FER$_S$ – Target frame error rate for the Forward Dedicated Control Channel.

FPC_DCCH_MAX_SETPT$_S$ – Maximum value of the power control subchannel outer loop setpoint for the Forward Dedicated Control Channel.

FPC_DCCH_MIN_SETPT$_S$ – Minimum value of the power control subchannel outer loop setpoint for the Forward Dedicated Control Channel.

FPC_DELTA_SCH_SETPT$_S$ – The difference between the Fundamental Channel current power control subchannel outer loop setpoint and the Supplemental Channel current power control subchannel outer loop setpoint.

FPC_DELTA_SETPT$_S$ – The difference between the Fundamental Channel current power control subchannel outer loop setpoint and the Dedicated Control Channel current power control subchannel outer loop setpoint.

FPC_FCH_CURR_SETPT$_S$ – Current power control subchannel outer loop setpoint for the Forward Fundamental Channel.

FPC_FCH_FER$_S$ – Target frame error rate for the Forward Fundamental Channel.

FPC_FCH_MAX_SETPT$_S$ – Maximum value of the power control subchannel outer loop setpoint for the Forward Fundamental Channel.

FPC_FCH_MIN_SETPT$_S$ – Minimum value of the power control subchannel outer loop setpoint for the Forward Fundamental Channel.

FPC_MODE$_S$ – Forward power control operating mode.

FPC_MODE_NO_SCH$_S$ – Forward power control operating mode except during the forward Supplemental Channel assignment interval.

FPC_MODE_SCH$_S$ – Forward power control operating mode during the forward Supplemental Channel assignment interval.

FPC_PRI_CHAN$_S$ – Primary power control subchannel measured channel.

FPC_SEC_CHAN$_S$ – Index of Forward Supplemental Channel to be measured by the secondary power control subchannel.

FPC_SCH_CURR_SETPT$_S$[i] – Current power control subchannel outer loop setpoint for Forward Supplemental Channel i.

FPC_SCH_FER$_S$[i] – Target frame error rate for Forward Supplemental Channel i.

FPC_SCH_MAX_SETPT$_S$[i] – Maximum value of the power control subchannel outer loop setpoint for Forward Supplemental Channel i.

FPC_SCH_MIN_SETPT$_S$[i] – Minimum value of the power control subchannel outer loop setpoint for Forward Supplemental Channel i.

FPC_SETPT_THRESH$_S$ – Power control subchannel outer loop setpoint report threshold for the Dedicated Control Channel.

FPC_SETPT_THRESH_SCH$_S$ – Power control subchannel outer loop setpoint report threshold for the Supplemental Channel.

FRAME_OFFSET$_S$ – Current Traffic Channel frame offset, in units of 1.25 ms.

FULL_BSPM_IND – Indicates whether mobile station had the complete BSPM information at the time it received the last Full or Differential *BCMC Service Parameters Message*.

FUNDICATED_BCMC_IND$_S$ – Broadcast-Multicast services on Fundicated Channel Indicator.

GEN_NGHBR_LST_MSG_SEQ$_S$ – General Neighbor List Message sequence number.

GLOBAL_REDIRECT$_S$ – *Global Service Redirection Message* sent indicator.

GLOB_SERV_REDIR_MSG_SEQ$_S$ – Global Service Redirection Message sequence number.

GRANTED_MODE$_S$ – Mobile station current granted mode.

HASH_KEY – Hashing function input that determines the return value. Derived from IMSI_O.

HDM_SEQ$_S$ – Last received *Extended Handoff Direction Message*, *General Handoff Direction Message*, or *Universal Handoff Direction Message* sequence number.

HOME_REG$_S$ – Home (non-roaming) autonomous registration enable.

IGNORE_ESCAM$_S$ – Identifies whether a mobile station will process the reverse supplemental channel assignment portion of the subsequent *Supplemental Channel Assignment Message* or *Reverse Supplemental Channel Assignment Mini Message*.

IGNORE_QPCH$_S$ – Ignore QPCH indicators flag. Indicates whether the mobile station is to ignore its assigned paging indicators on the QPCH while operating in the reduced slot cycle mode if the reduced slot cycle index is -3 or -4.

IGNORE_SCAM$_S$ – Identifies whether a mobile station will process the reverse supplemental code channel assignment portion of the subsequent *Supplemental Channel Assignment Message*.

IMSI_10$_S$ – The least significant digit of MNC when the MNC is 3-digit.

IMSI_11_12$_S$ – The 11th and 12th digits of the IMSI used for address matching.

IMSI_O_ADDR_NUM$_S$- The number of digits in the NMSI of the Operational IMSI (IMSI_O) minus four.

IMSI_O_S$_S$ – The last 10-digits of Operational IMSI (IMSI_O).

IMSI_O_11_12$_S$ – The 11th and 12th digits of the Operational IMSI (IMSI_O).

INIT_PWR$_S$ – Initial power offset for Access Channel probes.

LC_STATE$_S$ – Long code state obtained from the *Sync Channel Message*.

LOGICAL_TO_PHYSICAL_MAPPING_TABLE – This table contains the logical to physical mapping for signaling and user traffic.

LP_SEC$_S$ – Leap seconds count (offset of CDMA system time from UTC).

LTM_OFF$_S$ – Local time offset from UTC, in units of 30 minutes.

MAX_ADD_SERV_INSTANCE$_S$ – Maximum number of additional service reference identifiers allowed in origination.

MAX_CAP_SZ$_S$ – Maximum number of Access Channel frames in an Access Channel message capsule, less 3.

MAX_NUM_ALT_SO$_S$ – The maximum number of alternative service option numbers that the mobile station is allowed to include in the *Origination Message* or in the *Page Response Message*.

MAX_NUM_PROBE_HO$_S$ – The maximum number of times that a mobile station is permitted to perform an access probe handoff.

MAX_PWR_PUF$_S$ – Maximum number of PUF probes to be transmitted at maximum mobile station output power during a PUF attempt.

MAX_REQ_SEQ$_S$ – Maximum number of access probe sequences for an Access Channel or Enhanced Access Channel request.

MAX_RER_PILOT_LIST_SIZE$_S$ – Maximum number of pilots to be maintained in the radio environment report pilot list while in the radio environment reporting mode.

MAX_RSP_SEQ$_S$ – Maximum number of access probe sequences for an Access Channel or Enhanced Access Channel response.

MAX_SLOT_CYCLE_INDEX$_S$ – Maximum value of the slot cycle index allowed by the current base station. This parameter can take values between 0 and 7, inclusive.

MCC$_S$ – The Mobile Country Code used for address matching.

MCC_O$_S$ – The Mobile Country Code of IMSI_O.

MC_RR_PAR_MSG_SEQ$_S$ – *MC-RR Parameters Message* sequence number.

MIN_PILOT_EC_I0_THRESH$_S$ – Threshold for total $E_C/\mathbf{I_0}$ of pilots in the Serving Frequency Active Set used in the Periodic Serving Frequency Pilot Report Procedure.

MIN_PILOT_PWR_THRESH$_S$ – Threshold for total E_C of pilots in the Serving Frequency Active Set used in the Periodic Serving Frequency Pilot Report Procedure.

MIN_P_REV$_S$ – Minimum mobile station protocol revision level required for access to the CDMA system.

MIN_SLOT_CYCLE_INDEX – Minimum value of the slot cycle index allowed by the current base station. This parameter can take the values -4 or 0.

MIN_TOTAL_PILOT_EC_I0$_S$ – Total pilot strength threshold for the mobile station to attempt to demodulate the Forward Traffic Channel on the CDMA Candidate Frequency.

MOB_QOS$_S$ – Indicator of whether the mobile station is allowed to request QoS settings in the *Origination Message*, *Origination Continuation Message*, or *Enhanced Origination Message*.

MOB_TERM$_S$ – Mobile station termination indicator. Set to '1' if the mobile station will accept mobile station terminated calls in its current roaming status.

MSG_PSIST$_S$ – Persistence modifier for Access Channel message and Enhanced Access data transmissions.

MS_LAT$_S$ – The latitude of the mobile station as estimated by the base station.

MS_LOC_TSTAMP$_S$ – The time corresponding to the estimate of mobile station's latitude and longitude.

MS_LONG$_S$ – The longitude of the mobile station as estimated by the base station.

MS_INIT_POS_LOC_SUP_IND$_S$ – Mobile station initiated position location determination supported indicator.

MULT_NIDS$_S$ – Multiple NID storage indicator. Set to '1' if the mobile station may store more than one entry in SID_NID_LIST$_S$ for each SID.

MULT_SIDS$_S$ – Multiple SID storage indicator. Set to '1' if the mobile station may store entries in SID_NID_LIST$_S$ having different SIDs.

NDSS_ORIG$_S$ – NDSS Origination Indicator. Indicator used when the mobile station is NDSS-redirected while originating a call.

NEW_BAND_RECORD – Record carrying information pertaining to a channel on a new band to which the mobile station has hashed. The record includes the following fields:

- NEW_BAND_CLASS – The new band class.
- NEW_FREQ – The new frequency in the new band class.

NGHBR_BAND$_S$ – Neighbor band class.

NGHBR_CONFIG$_S$ – Neighbor base station channel allocation configuration.

NGHBR_FREQ$_S$ – Neighbor CDMA channel number.

NGHBR_LST_MSG_SEQ$_S$ – *Neighbor List Message* sequence number.

NGHBR_MAX_AGE$_S$ – Neighbor set maximum age for retention in the set.

NGHBR_PN$_S$ – Neighbor base station Pilot Channel PN sequence offset in units of 64 PN chips.

NGHBR_REC – Record containing information about a neighbor base station (see also NGHBR_REC_LIST).

NGHBR_REC_LIST – Neighbor base station record list. A descriptive structure used to manage the base station's information records about neighbor base stations (see also NGHBR_REC).

NGHBR_SET_ACCESS_INFO$_S$ – Neighbor Set access handoff or access probe handoff information included indicator.

NGHBR_SET_ENTRY_INFO$_S$ – Neighbor Set access entry handoff information included indicator.

NGHBR_SET_SIZE$_S$ – Size of the Neighbor Set.

NGHBR_TIMING_INCL$_S$ – Indicates that hopping pilot beacon timing information is included.

NGHBR_TX_DURATION$_S$ – Hopping pilot beacon transmit time duration.

NGHBR_TX_OFFSET$_S$ – Hopping pilot beacon transmit time offset.

NGHBR_TX_PERIOD$_S$ – Hopping pilot beacon transmit time period.

NID$_S$ – Network identification. A network is a subset of the base stations within a wireless system.

NOM_PWR$_S$ – Nominal transmit power offset. A correction factor to be used by mobile stations in the open loop power estimate.

NUM_FCCCH$_S$ – Number of Forward Common Control Channels supported on the current CDMA channel**.**

NUM_PREAMBLE$_S$ –Traffic Channel preamble length for hard handoff.

NUM_QPCH$_S$ – Number of Quick Paging Channels supported on the current CDMA channel.

NUM_REV_CODES$_S$ – A storage variable in the mobile station that contains the number of Reverse Supplemental Code Channels that will be utilized in the next Reverse Supplemental Code Channel transmission beginning at time REV_START_TIME$_S$. A value of 0 indicates no Reverse Supplemental Code Channel transmission will be permitted (i.e., there is no pending Reverse Supplemental Code Channel transmission).

NUM_SOFT_SWITCHING_FRAMES$_S$ – Number of frames for R-CQICH soft switching. The duration of the cell switching period, during which the mobile station is to transmit the cell switch sequence on the R-CQICH channel when it switches between two pilots which are in different groups.

NUM_SOFT_SWITCHING_FRAMES_CHM$_S$ – Number of frames for R-CQICH soft switching while in Control Hold. The duration of the cell switching period, during which the mobile station, while in Control Hold, is to transmit the cell switch sequence on the R-CQICH channel when it switches between two pilots which are in different groups.

NUM_SOFT_SWITCHING_SLOTS$_S$ – Number of slots per frame for R-CQICH soft switching. The duration of the cell switching slots within a switching frame, during which the mobile station is to transmit the cell switch indication by using Walsh cover of target on the R-CQICH channel when it switches between two pilots which are in different groups.

NUM_SOFT_SWITCHING_SLOTS_CHM$_S$ – Number of slots per frame for R-CQICH soft switching while in Control Hold. The duration of the cell switching slots within a switching frame, during which the mobile station, while in Control Hold, is to transmit the cell switch indication by using Walsh cover of target on the R-CQICH channel when it switches between two pilots which are in different groups.

NUM_SOFTER_SWITCHING_FRAMES$_S$ – Number of frames for R-CQICH softer switching. The duration of the cell switching period, during which the mobile station is to transmit the cell switch sequence on the R-CQICH channel when it switches between two pilots which are in the same group.

NUM_SOFTER_SWITCHING_FRAMES_CHM$_S$ – Number of frames for R-CQICH softer switching while in Control Hold. The duration of the cell switching period, during which the mobile station, while in Control Hold, is to transmit the cell switch sequence on the R-CQICH channel when it switches between two pilots which are in the same group.

NUM_SOFTER_SWITCHING_SLOTS$_S$ – Number of slots per frame for R-CQICH softer switching. The duration of the cell switching slots within a switching frame. During this time the mobile station is to transmit the cell switch indication by using the Walsh cover of the target sector in the cell switch sequence on the R-CQICH channel when it switches between two pilots which are in the same group.

NUM_SOFTER_SWITCHING_SLOTS_CHM$_S$ – Number of slots per frame for R-CQICH softer switching while in Control Hold. The duration of the cell switching slots within a switching frame. During this time the mobile station, while in Control Hold, is to transmit the cell switch indication by using the Walsh cover of the target sector in the cell switch sequence on the R-CQICH channel when it switches between two pilots which are in the same group.

NUM_STEP$_S$ – Number of access probes or enhanced access probes in a single access probe sequence or enhanced access probe sequence.

NUM_SYNC_ID_SUPPORTED – Number of SYNC_IDs supported by the mobile station.

OTHER_REPORTED_LIST – List of other pilots that have pilot strengths exceeding T_ADD and that are not included in ACCESS_HO_LIST.

PACA$_S$ – PACA call indicator. Set to enabled to indicate that the mobile station is waiting for a priority access channel assignment; otherwise, set to disabled. In Sections 2 and 3, PACA$_S$ = 0 is equivalent to setting PACA$_S$ to disabled and PACA$_S$ = 1 is equivalent to setting PACA$_S$ to enabled.

PACA_CANCEL – PACA call cancel indicator. Set to '1' when the mobile station is directed by the user to cancel the PACA call; otherwise, set to '0'.

PACA_SID$_S$ – PACA system identifier. Equal to the SID of the system on which the mobile station originated a PACA call.

PACA_TIMEOUT$_S$ – PACA state timer duration. Specifies how long the mobile station should wait for a *PACA Message* from the base station.

PACKET_ZONE_ID$_S$ – Packet data services zone identifier of the base station.

PAGECH$_S$ – Current CDMA Paging Channel number.

PAGED – Indicator for a page match detected while the mobile station is in the *System Access State*.

PAGE_CHAN$_S$ – Number of Paging Channels supported on the current CDMA channel.

PAM_SZ$_S$ – Number of frames in the Access Channel or Enhanced Access Channel preamble, less 1.

PARAMETER_REG$_S$ – Parameter-change registration enable.

PDCH_CHM_SUPPORTED$_S$ – Indicates whether the base station supports PDCH Control Hold Mode operation.**PDCH_GROUP_IDENTIFIER$_S$** – A three-bit Packet Data Channel group identifier. It is used to determine whether the mobile station should use the softer or soft reselection parameters when repointing between pilots in its Active Set (See [3]).

PDCH_SOFT_SWITCHING_DELAY$_S$ – PDCH soft switching delay. The minimum interruption seen by the mobile station when the mobile station is to transmit the cell switch sequence on the R-CQICH channel when it switches between two pilots which are in different groups.

PDCH_SOFTER_SWITCHING_DELAY$_S$ – PDCH softer switching delay. The minimum interruption seen by the mobile station when the mobile station is to transmit the cell

switch sequence on the R-CQICH channel when it switches between two pilots which are in the same group.

PERIODIC_SEARCH$_S$ – Flag to indicate if the mobile station is to perform a periodic search on the Candidate Frequency.

PGSLOT – Value obtained from the hashing function, used to determine the mobile station's assigned Paging Channel slots.

PILOT_ARRIVAL – Time of occurrence, as measured at the mobile station antenna connector, of the earliest arriving usable multipath component of the pilot. The arrival time is measured relative to the mobile station's time reference.

PILOT_INFO_REQ_SUPPORTED$_S$ – Pilot information request supported indicator.

PILOT_GATING_RATE$_S$ – Reverse pilot gating rate on the Reverse Pilot Channel.

PILOT_GATING_USE_RATE – Reverse pilot gating rate enable indicator. It indicates whether or not the Reverse Pilot Channel is gated.

PILOT_INC$_S$ – Pilot PN sequence offset index increment. The interval between pilots, in units of 64 PN chips, for base stations in a system.

PILOT_PN$_S$ – Pilot Channel PN sequence offset, in units of 64 PN chips, for a base station.

PILOT_PN_PHASE – Calculated Pilot Channel PN phase, in chips, including the PN sequence offset and the arrival time relative to the mobile station's time reference.

PILOT_REPORT$_S$ – Pilot reporting indicator.

PLCM_TYPE$_S$ – Public long code mask type. Indicates the long code mask generation algorithm when Public Long Code Mask is in use. See 2.3.6.

POTENTIAL_CDMACH$_S$ – The CDMA Channel number that could potentially be used by the mobile station.

POWER_DOWN_REG$_S$ – Power down registration enable indicator.

POWER_UP_REG$_S$ – Power up registration enable indicator.

PPSMM_PERIOD$_S$ – The period used in the Periodic Serving Frequency Pilot Report Procedure.

PRAT$_S$ – Data rate of the Paging Channels.

P_REV$_S$ – Protocol revision level supported by a base station.

P_REV_IN_USE$_S$ – Protocol revision level currently in use by a mobile station.

PREF_MSID_TYPE$_S$ – Preferred mobile station identifier field type.

PREVIOUS_ACTIVE_PILOT$_S$ – Identifies the pilot, if any, which was in the Active Set immediately prior to the current pilot in the Active Set, during the current access attempt.

PRI_NGHBR_LST$_S$ – *Private Neighbor List Message* sent indicator.

PRI_NGHBR_PN – Private Neighbor base station Pilot Channel PN sequence offset in units of 64 PN chips.

PRI_NGHBR_REC – Record containing information about a private neighbor base station (see also PRI_NGHBR_REC_LIST).

PRI_NGHBR_REC_LIST – Private neighbor base station record list. A descriptive structure used to manage the base station's information records about private neighbor base stations (see also PRI_NGHBR_REC).

PRI_NGHBR_LST_MSG_SEQ$_S$ – Private Neighbor List Message sequence number.

PROBE_BKOFF$_S$ – Access Channel probe backoff range, in slots.

PROBE_PN_RAN$_S$ – Range for hashing function selection of the delay prior to transmission of Access Channel probes. Value is $\log_2$(range + 1).

PSIST$_S$ – Persistence value for the mobile station's overload class.

PUF_FREQ_INCL$_S$ – Flag to indicate whether the mobile station is to transmit a PUF probe on the serving frequency or on a target frequency.

PUF_INIT_PWR$_S$ – Power increase (in dB) of the first PUF pulse in a PUF attempt.

PUF_INTERVAL$_S$ – Number of frames between the start of each PUF probe.

PUF_PULSE_SIZE$_S$ – Duration of a PUF pulse in power control groups.

PUF_PWR_STEP$_S$ – Amount (in dB) by which the mobile station is to increment the power of a PUF pulse above nominal power from one PUF pulse to the next.

PUF_SETUP_SIZE$_S$ – Number of power control groups within a PUF probe before the transmission of the PUF pulse.

PUF_SF_CDMABAND$_S$ – Serving Frequency CDMA band class.

PUF_SF_CDMACH$_S$ – Serving Frequency CDMA Channel number.

PUF_TF_CDMABAND$_S$ – Target Frequency CDMA band class.

PUF_TF_CDMACH$_S$ – Target Frequency CDMA Channel number.

PUF_TX_PWR$_S$ – Mobile station's output power for the PUF pulse.

PWR_CNTL_STEP$_S$ – Power control step size assigned by the base station that the mobile station is to use for closed loop power control.

PWR_PERIOD_ENABLE$_S$ – Forward power control periodic reporting enabled indicator.

PWR_REP_DELAY$_S$ – Power report delay. The period that the mobile station waits following an autonomous *Power Measurement Report* before restarting frame counting for power control purposes.

PWR_REP_FRAMES$_S$ – Power control reporting frame count. The number of frames over which the mobile station is to count frame errors. Value is $2 \times \log_2$(frames / 5).

PWR_REP_THRESH$_S$ – Power control reporting threshold. The number of bad frames to be received in a measurement period before the mobile station is to generate a *Power Measurement Report Message*.

PWR_STEP$_S$ – Power increment for successive access probes, in units of 1.0 dB.

PWR_THRESH_ENABLE$_S$ – Forward power control threshold reporting enabled indicator.

QOF_ID$_S$ – Quasi-orthogonal function index on the Supplemental Channel.

QPAGECH$_S$ – Current Quick Paging Channel number.

QPCH_CCI_SUPPORTED$_S$ – Flag to indicate if configuration change indicators are supported on the Quick Paging Channel.

QPCH_POWER_LEVEL_PAGE$_S$ – Relative power level of the transmitted Quick Paging Channel Paging Indicator modulation symbols, relative to the Forward Pilot Channel.

QPCH_POWER_LEVEL_CONFIG$_S$ – Relative power level of the transmitted Quick Paging Channel Configuration Change Indicator modulation symbols, relative to the Forward Pilot Channel.

QPCH_RATE$_S$ – Indicator rate of the current Quick Paging Channel(s).

QPCH_SUPPORTED$_S$ – Flag to indicate if the Quick Paging Channel is supported by the base station.

RA – Random access channel number. The Access Channel number generated (pseudo-randomly) by the mobile station.

RAND$_S$ – Authentication random challenge value.

RANDC – The eight most-significant bits of the random challenge value used by the mobile station.

RANDOM_TIME – Random time. A portion of SYS_TIME used to seed the random number generator.

RC_CAP_REQUESTED$_S$ – Radio Configuration Capability indicator. When set to “1” the mobile station shall include the Radio Configuration capabilities that it supports in the *Origination Message and Page Response Message*.

RCCCH_SLOT$_S$ – See [2].

RCCCH_SLOT_OFFSET1$_S$ – See [2].

RCCCH_SLOT_OFFSET2$_S$ – See [2].

REDIRECTION$_S$ – Service redirection indicator. Set to enabled to indicate that service redirection is currently in effect; otherwise, set to disabled.

REDIRECT_REC$_S$ – Holds the service redirection criteria specified in the redirection record of the most recently received *Extended Global Service Redirection Message, Global Service Redirection Message* or *Service Redirection Message*.

REDIRECT_REC_LIST – An array of redirection records selected from the most recently received *Extended Global Service Redirection Message*. Each redirection record in this array specifies a redirection criteria. See REDIRECT_REC$_S$.

REG_COUNT$_S$ – The timer-based registration counter.

REG_COUNT_MAX$_S$ – Timer-based registration count limit. The timer-based registration counter expiration value computed from REG_PRD$_r$.

REG_DIST$_S$ – Registration distance. Distance from last registration that causes a distance-based registration to occur.

REG_ENABLED$_S$ – Autonomous registrations enabled indicator.

REG_NID$_S$ – Network identification corresponding to the base station where the mobile station is considered registered upon receiving confirmation of delivery of *Registration Message*, *Origination Message*, *Page Response Message*, or *Reconnect Message*.

REG_REG_ZONE$_S$ – Registration zone number corresponding to the base station where the mobile station is considered registered upon receiving confirmation of delivery of *Registration Message*, *Origination Message*, *Page Response Message*, or *Reconnect Message*.

REG_SECURITY_RESYNC – Security re-sync required registration indicator.

REG_SID$_S$ – System identification corresponding to the base station where the mobile station is considered registered upon receiving confirmation of delivery of *Registration Message*, *Origination Message*, *Page Response Message*, or *Reconnect Message*.

REGISTERED$_S$ – Mobile station registered indicator.

REG_PRD$_S$ – Registration period. The time interval between timer-based registrations. Value is $4 \times \log_2(\text{time} / 0.08 \text{ s})$.

REG_PSIST$_S$ – Persistence modifier for registration accesses (except ordered registrations).

REG_ZONE$_S$ – Registration zone number of the base station.

REG_ZONE_TIMER$_S$ – Zone timer length corresponding to the base station where the mobile station is considered registered upon receiving confirmation of delivery of *Registration Message*, *Origination Message*, *Page Response Message*, or *Reconnect Message*.

REJECT_UZID$_S$ – User Zone identifier of the User Zone rejected by the base station.

RELEASE_TO_IDLE_IND$_S$ – Indicator of whether the mobile station is allowed to transition directly to the *Mobile Station Idle State* upon releasing all the dedicated channels.

RER_MAX_NUM_MSG$_S$ – The maximum number of Radio Environment Messages that the mobile station is permitted to transmit while in the radio environment reporting mode.

RER_MODE_ENABLED – Flag that indicates whether the radio environment reporting mode is currently enabled at the mobile station.

RER_PILOT_LIST – Radio environment report pilot list used while in the radio environment reporting mode.

RER_MODE_SUPPORTED$_S$ – Base station support of radio environment reporting mode indicator.

RESELECT_INCLUDED$_S$ – System reselection information included indicator. When this is set to '1', the system reselection procedure is enabled.

RESPOND_IND$_S$ – Respond Requested Indicator. Indicates if the mobile station is to acknowledge direct channel assignment by sending a page response message or a reconnect message in unassured mode.

RESQ_ENABLED$_S$ – Call rescue feature enabled indicator. Flag to indicate if the call rescue feature is enabled in the network.

RESQ_ALLOWED_TIME$_S$ – Call rescue allowed timer. Specifies the maximum interval that the mobile station has to begin a call rescue soft handoff attempt, after the call rescue delay timer expires.

RESQ_ATTEMPT_TIME$_S$ – Call rescue attempt timer. Specifies the maximum time a mobile station is allowed to keep its transmitter re-enabled while waiting to receive N_{3m} consecutive good frames during a call rescue soft handoff attempt.

RESQ_CODE_CHAN$_S$ – The code channel index of the Rescue Channel for neighbor base stations that are configured with a Rescue Channel.

RESQ_DELAY_TIME$_S$ – Call rescue delay timer. Specifies the minimum delay before the mobile station can attempt call rescue soft handoff, after the mobile station disables its transmitter due to receiving N_{2m} consecutive bad frames or declaring an acknowledgment failure.

RESQ_MIN_PERIOD$_S$ – Minimum time between consecutive call rescues. Specifies the minimum time after a successful call rescue (i.e. receipt of N_{3m} consecutive good frames by the mobile station after the rescue attempt timer is enabled) before any subsequent call rescue attempts can be initiated.

RESQ_NUM_PREAMBLE_RC1_RC2$_S$ – The Traffic Channel preamble length for Call Rescue Soft Handoff when operating in Radio Configuration 1 or 2.

RESQ_NUM_PREAMBLE$_S$ – The Traffic Channel preamble length for Call Rescue Soft Handoff when operating in Radio Configuration greater than 2.

RESQ_NUM_TOT_TRANS_20MS$_S$ – The required number of transmissions of a regular PDU before declaring a L2 Acknowledgment Failure when Call Rescue is enabled.

RESQ_NUM_TOT_TRANS_5MS$_S$ – The required number of transmissions of a mini PDU before declaring a L2 Acknowledgment Failure when Call Rescue is enabled.

RESQ_POWER_DELTA$_S$ – The power level adjustment to be applied to the last closed-loop power level when re-enabling the transmitter for call rescue soft handoff.

RESQ_QOF$_S$ – The Quasi-Orthogonal Function mask identifier of the Rescue Channel for neighbor base stations that are configured with a Rescue Channel.

RESUME_PREAMBLE$_S$ – A storage variable in the mobile station that contains the size of the preamble that shall be transmitted on a Reverse Supplemental Code Channel at the beginning of transmission on a Reverse Supplemental Code Channel when resuming transmission following an interruption when discontinuous transmission is occurring.

RETRY_DELAY$_S$[*i*] – A storage variable in the mobile station that contains the system time before which the mobile station may not transmit a specific message. The type of message that cannot be transmitted is specified by RETRY_TYPE, represented here by i. A RETRY_DELAY$_S$[i] value of 0 indicates no retry delay is in effect, and a value of '11111111' indicates an infinite retry delay.

RETRY_DELAY_UNIT$_S$ – The units for the value of RETRY_DELAY$_S$. Possible values are

1000ms and 60000ms.

RETRY_DELAY_VALUE$_S$ – The unitless value of the retry delay.

RETRY_TYPE$_S$ – The retry delay type. It specifies the type of message to which the retry delay value applies. If set to a value of 0, it indicates that all retry delay values should be cleared.

RETURN_CAUSE$_S$ – Reason for the mobile station registering or accessing the system.

RETURN_IF_FAIL$_S$ – Return if fail indicator. Set to '1' to indicate that mobile station is to return to the system from which it was redirected if it fails to acquire service on a system using specified redirection criteria. Otherwise, set to '0'.

RETURN_IF_HANDOFF_FAIL$_S$ – Return if handoff fail indicator. Indicates if the mobile station is to resume using the Active Set on the Serving Frequency following an unsuccessful hard handoff attempt.

REV_DCCH_MUX_OPTION$_S$ – Reverse Dedicated Control Channel Multiplex Option.

REV_DTX_DURATION$_S$ – Maximum duration of time in units of 20 ms that the mobile station is allowed to stop transmitting on a Reverse Supplemental Code Channel within the reverse assignment duration.

REV_DURATION$_S$ – A stored variable in the mobile station that contains the duration (in units of 80 ms) of the Reverse Supplemental Code Channel transmission that will begin at time REV_START_TIME$_S$.

REV_FCH_GATING_MODE$_S$ – The reverse Fundamental Traffic Channel gating mode in Radio Configurations 3, 4, 5, and 6 where 50% of the PCGs in the 1500 bps and 1800 bps frames are gated off (see [2]). Set to '1' if the mobile station is operating in the reverse fundamental channel gating mode.

REV_FCH_MUX_OPTION$_S$ – Reverse Fundamental Channel Multiplex Option.

REV_FCH_RC$_S$ – Reverse Fundamental Channel Radio Configuration.

REV_FRAME_40_MAX_RATE$_S$ – The maximum data rate for the mobile station's transmission at 40 ms frame length on the Reverse Supplemental Channel.

REV_FRAME_80_MAX_RATE$_S$ – The maximum data rate for the mobile station's transmission at 80 ms frame length on the Reverse Supplemental Channel.

REV_LINKED_HDM_SEQ$_S$ – Storage variable containing the most recent reverse sequence number of the *General Handoff Direction Message* to which a *Supplemental Channel Assignment Message* reverse assignment was linked.

REV_PDCH_AUTO_ALLOWED$_S$[i] – Reverse Packet Data Channel Autonomous Transmission allowed indicator. An on or off indicator used to identify whether autonomous transmission is allowed or not allowed for each SR_ID.

REV_PDCH_BOOST_ALLOWED$_S$[i] – Reverse Packet Data Channel boost allowed indicator. An on or off indictor that identifies whether traffic to pilot ratio boosting is allowed or not allowed for each SR_ID.

REV_PDCH_BOOST_OVERSHOOT$_S$ – Reverse Packet Data Channel Boost Overshoot.

REV_PDCH_BUFFER_SIZE$_S$[i] – Reverse Packet Data Buffer size. An array of buffer sizes that correspond to the buffer status.

REV_PDCH_DEFAULT_PERSISTENCE$_S$ – Reverse Packet Data Default Persistence. The initial default persistence value.

REV_PDCH_GRANT_PRECEDENCE$_S$ – Reverse Packet Data Channel Grant Precedence Indicator.

REV_PDCH_INIT_TARGET_TPR$_S$ – Reverse Packet Data Channel Initial Target for Traffic to pilot ratio. The initial target traffic to pilot ratio.

REV_PDCH_MAX_AUTO_TPR$_S$ – The maximum traffic to pilot ratio for autonomous transmission.

REV_PDCH_MAX_SIZE_ALLOWED_ENCODER_PACKET$_S$ – Maximum Allowed Reverse Packet Data Channel encoder packet size.

REV_PDCH_MAX_SIZE_SUPPORTED_ENCODER_PACKET – Maximum supported Reverse Packet Data Channel encoder packet size by the mobile station.

REV_PDCH_MAX_TARGET_TPR$_S$ – Reverse Packet Data Maximum Target Traffic to Pilot Ratio. The maximum target traffic to pilot ratio that is allowed.

REV_PDCH_MSIB_SUPPORTED$_S$ – Reverse Packet Data Channel Mobile Station Indicator Supported Bit.

REV_PDCH_MUX_OPTION_HIGH_RATE$_S$ – Reverse Packet Data Channel Multiplex Option for higher data rates indicator.

REV_PDCH_MUX_OPTION_LOW_RATE$_S$ – Reverse Packet Data Channel Multiplex Option for lower data rates indicator.

REV_PDCH_NUM_ARQ_ROUNDS_BOOST$_S$ – The maximum number of ARQ rounds for boosted transmission that can be performed on the Reverse Packet Data Channel.

REV_PDCH_NUM_ARQ_ROUNDS_NORMAL$_S$ – The maximum number of ARQ rounds for non-boosted transmission that can be performed on the Reverse Packet Data Channel.

REV_PDCH_QUICK_START_THRESH$_S$ – Reverse Packet Data Quick Start Threshold**.** The Quick start threshold for the Reverse Packet Data Control Channel.

REV_PDCH_RC – Reverse Packet Data Channel radio configuration.

REV_PDCH_RESET_PERSISTENCE$_S$ – Reverse Packet Data Channel Reset Persistence. Determines the value of current persistence [3] at the end of a non-persistent grant for the Reverse Packet Data Channel.

REV_PDCH_REQCH_TRIGGER$_S$[i] – Reverse Packet Data Request Channel Trigger. The following parameters are contained in this array and will be triggered for the REQCH.

- REV_REQCH_MIN_DURATION – Minimum duration between REQCH messages for this SR_ID.

- REV_REQCH_USE_BUFFER_REPORTS – An on or off indicator used to allow buffer reports.

- REV_REQCH_USE_POWER_REPORTS – An on or off indicator used to allow power status reports.
- REV_REQCH_USE_WATERMARKS – An on or off indicator used to allow watermark reports.
- REV_REQCH_HIGH_WATERMARK – The high watermark level, in octets.
- REV_REQCH_LOW_WATERMARK – The low watermark level, in octets.
- REV_REQCH_CEILING – The high ceiling level, in octets, used for high priority reporting.
- REV_REQCH_FLOOR – The low floor level, in octets, used for high priority reporting.

REV_PDCH_SOFT_HANDOFF_RESET_IND$_S$ – Reverse Packet Data Channel Soft Handoff Reset Indicator. An indicator used to determine whether the Reverse Packet Data Channel control function must be initialized when soft selection is to occur or not.

REV_PDCH_STEP_DOWN$_S$[i] – Reverse Packet Data Channel Step "down" for rate control.

REV_PDCH_STEP_UP$_S$[i] – Reverse Packet Data Channel Step "up" for rate control.

REV_PDCH_TABLE_SEL$_S$ – Reverse Packet Data Channel Table selector.

REV_PDCH_TPR_BOOSTED$_S$[i] – Reverse Packet Data Traffic to Pilot Ratio Boosted. An array indicating the traffic to pilot ratio for boosted traffic.

REV_PDCH_TPR_NORMAL$_S$[i] – Reverse Packet Data Channel Traffic to Pilot Normal. An array indicating the traffic to pilot ratio for non-boosted traffic.

REV_PWR_CNTL_DELAY$_S$ – The reverse link power control delay for the reverse fundamental channel gating mode in Radio Configurations 3, 4, 5, and 6 and the gated preamble transmission on the Enhanced Access Channel or the Reverse Common Control Channel. The delay is the time between the end of the reverse link PCG and the beginning of the forward link PCG minus one, when the round trip delay is zero.

REV_RC$_S$ – Reverse Channel Radio Configuration.

REV_REQCH_ADJ_GAIN$_S$ – Reverse Request Channel Adjustment Gain.

REV_REQCH_HEADROOM_DURATION$_S$ – Reverse Request Channel minimum power headroom update trigger interval.

REV_REQCH_MAX_POWER_UPDATE_DURATION$_S$ – Reverse Request Channel maximum power headroom update trigger interval.

REV_REQCH_POWER_HEADROOM_DECREASE$_S$ – Reverse Request Channel Power headroom decrease delta to trigger power report.

REV_REQCH_POWER_HEADROOM_INCREASE$_S$ – Reverse Request Channel Power headroom increase delta to trigger power report.

REV_REQCH_QUICK_REPEAT_ALLOWED$_S$ – Reverse Request Channel Quick Repeat Allowed indicator.

REV_SCH_DTX_DURATION$_S$ – Maximum duration of time in units of 20 ms that the mobile station is allowed to stop transmitting on a Reverse Supplemental Channel within the reverse assignment duration.

REV_SCH_DURATION$_S$ – A stored variable in the mobile station which contains the duration of the Reverse Supplemental Channel transmission which will begin at time REV_SCH_START_TIME$_S$.

REV_SCH_FRAME_LENGTH$_S$ – The Reverse Supplemental Channel frame length.

REV_SCH_RATE$_S$ – The rate of the Reverse Supplemental Channel.

REV_SCH_START_TIME$_S$ – A stored variable in the mobile station which contains the System Time, in units of time specified by START_TIME_UNIT$_S$, (modulo 32) at which the mobile station shall start (or resume) processing Reverse Supplemental Channels.

REV_SPICH_ADJ_GAIN$_S$ – Reverse Secondary Pilot Channel Adjustment Gain.

REV_SPICH_EP_SIZE$_S$ – Minimum Encoder Packet Size for which the Reverse Secondary Pilot Channel is used.

REV_START_TIME$_S$ – A stored variable in the mobile station that contains the next 80 ms frame boundary (modulo 64) on which the mobile station is assigned to start Reverse Supplemental Code Channel transmission.

REV_WALSH_ID$_S$ – Reverse Supplemental Channel Walsh cover Identifier.

RLGAIN_ACKCH_PILOT$_S$ – Reverse Acknowledgment Channel to pilot adjustment gain.

RLGAIN_CQICH_PILOT$_S$ – Reverse Channel Quality Indicator Channel to pilot adjustment gain.

RLGAIN_PDCCH_PILOT$_S$ – Reverse Packet Data Channel to pilot adjustment gain.

RLGAIN_REQCH_PILOT$_S$ – Reverse Request Channel to pilot adjustment gain.

RLGAIN_SPICH_PILOT$_S$ – Reverse Secondary Pilot Channel to pilot adjustment gain.

RN_HASH_KEY$_S$ – Name of an internal variable having the same value as the mobile station's ESN. This variable is used by procedures defined in [3].

ROAM_INDI$_S$ – Enhanced roaming indicator used for mobile station roaming condition display.

RS – Inter-probe sequence backoff. The delay in slots generated (pseudorandomly) by the mobile station following an unsuccessful access probe sequence or prior to the first access probe in a response attempt.

RSC_END_TIME – Reduced slot cycle mode end time. The system time at which a mobile station operating in the reduced slot cycle mode will exit the mode.

RSC_MODE_ENABLED – Mobile Station flag that indicates whether reduced slot cycle mode is enabled.

$RSCI_S$ – Reduced slot cycle index.

RT – Inter-probe backoff. The delay in slots generated (pseudorandomly) by the mobile station following an unacknowledged access probe.

$RTC\_NOM\_PWR_S$ – Reverse Traffic Channel Nominal Power. The nominal power to be used by the mobile station for its initial transmission on the Reverse Traffic Channel when Direct Channel Assignment is used.

RTC_NOM_PWR_USE_IND – Reverse Traffic Channel Nominal Power Used Indicator. Indicates if the mobile station uses $RTC\_NOM\_PWR_S$. See $RTC\_NOM\_PWR_S$.

$SCAM\_FOR\_DURATION\_MODE_S$ – Indicator for a specific or an indefinite Forward Supplemental Code Channel assignment duration.

$SCAM\_FOR\_ORDER_S$ – The stop or start command set by a *Supplemental Channel Assignment Message* that is linked to a *General Handoff Direction Message*.

$SCAM\_REV\_DURATION\_MODE_S$ – Indicator for a specific or an indefinite Reverse Supplemental Code Channel assignment duration.

$SCH\_BAD\_FRAMES_S$ – Forward Supplemental Channel bad frames count. The number of received bad Forward Supplemental Channel frames.

$SCH\_TOT\_FRAMES_S$ – Total Forward Supplemental Channel frames received. The total number of received Forward Supplemental Channel frames, counted for Forward Traffic Channel power control.

$SCRM\_SEQ\_NUM_S$ – Storage variable containing the most recently transmitted *Supplemental Channel Request Message* sequence number.

$SEARCH\_MODE_S$ – Search mode to be used in a search on the Candidate Frequency.

$SEARCH\_OFFSET_S$ – Time offset of the start of the first search from the action time of the *Candidate Frequency Search Request Message* or the *Candidate Frequency Search Control Message* that starts a search.

$SEARCH\_PERIOD_S$ – Period for search on the Candidate Frequency.

$SEARCH\_PRIORITY_S$ – Neighbor Pilot Channel search priority.

$SEARCH\_PRIORITY\_INCL_S$ – Search priorities included indicator.

$SEARCH\_TIME\_RESOLUTION_S$ – Unit of delay used in the *Candidate Frequency Search Report Message* to report the total and maximum times away from the Serving Frequency.

$SENDING\_BSPM_S$ – *BCMC Service Parameters Message* is being transmitted indicator.

$SENDING\_RAND_S$ – *ANSI-41 RAND Message* sent indicator.

SERV_NEG$_S$ – Service negotiation indicator. Indicates whether the mobile station is to use service negotiation or service option negotiation.

SERV_REQ_NUM$_S$ – Service request sequence number. Sequence number to use when requesting a new service configuration.

SERVSYS$_S$ – Selected serving system indicator for Band Class 0. Set to SYS_A if the mobile station operates in system A; otherwise, set to SYS_B.

SETTING_SEARCH_WIN – SRCH_WIN_NGHBR Setting flag. Set to '1' if the mobile station shall set the SRCH_WIN_NGHBR field of each NGHBR_REC to SEARCH_WIN_N$_S$ for all NGHBR_SET_SIZE$_S$ entries upon receiving the *System Parameters Message*.

SF_ADD_INTERCEPT$_S$ – Intercept of the handoff add criterion for the Serving Frequency, stored during hard handoff.

SF_CDMABAND$_S$ – Serving Frequency CDMA band class, stored during hard handoff.

SF_CDMACH$_S$ – Serving Frequency CDMA Channel number, stored during hard handoff.

SF_CODE_CHAN_LIST$_S$ – Serving Frequency Code Channel List, stored during hard handoff.

SF_DROP_INTERCEPT$_S$ – Intercept of the handoff drop criterion for the Serving Frequency, stored during hard handoff.

SF_ENCRYPT_MODE$_S$ – Message encryption indicator for the Serving Frequency, stored during hard handoff.

SF_FRAME_OFFSET$_S$ – Traffic Channel frame offset used on the Serving Frequency, stored during hard handoff.

SF_NOM_PWR$_S$ – Nominal transmit power offset used on the Serving Frequency, stored during hard handoff.

SF_NOM_PWR_EXT$_S$ – Extended nominal transmit power offset indicator for the Serving Frequency, stored during hard handoff.

SF_P_REV$_S$ – Protocol revision level supported by the base station on the Serving Frequency.

SF_P_REV_IN_USE$_S$ – Protocol revision level currently used by the mobile station on the Serving Frequency.

SF_PLCM_TYPE$_S$ – Public long code mask type for the Serving Frequency, stored during hard handoff.

SF_PLCM_39$_S$ – 39-bit public long code mask specified by the base station for the Serving Frequency, stored during hard handoff.

SF_PRIVATE_LCM$_S$ – Private long code mask indicator for the Serving Frequency, stored during hard handoff.

SF_PVTLCM_42$_S$ – Private long code mask for the Serving Frequency, stored during hard handoff.

$SF\_SERV\_NEG_S$ – Service negotiation indicator for the Serving Frequency, stored during hard handoff.

$SF\_SERVICE\_CONFIG_S$ – Service configuration (service configuration record and non-negotiable service configuration record) for the Serving Frequency.

$SF\_SOFT\_SLOPE_S$ – Slope of the handoff add/drop criterion for the Serving Frequency, stored during hard handoff.

$SF\_SRCH\_WIN\_A_S$ – Search window size for the Active Set and Candidate Set used on the Serving Frequency, stored during hard handoff.

$SF\_SRCH\_WIN\_N_S$ – Search window size for the Neighbor Set used on the Serving Frequency, stored during hard handoff.

$SF\_SRCH\_WIN\_R_S$ – Search window size for the Remaining Set used on the Serving Frequency, stored during hard handoff.

$SF\_T\_ADD_S$ – Pilot detection threshold used on the Serving Frequency, stored during hard handoff.

$SF\_T\_COMP_S$ – Active Set versus Candidate Set comparison threshold used on the Serving Frequency, stored during hard handoff.

$SF\_T\_DROP_S$ – Pilot drop threshold used on the Serving Frequency, stored during hard handoff.

$SF\_T\_TDROP_S$ – Pilot drop timer value used on the Serving Frequency, stored during hard handoff.

$SF\_T\_TDROP\_RANGE_S$ – Pilot drop timer range value used on the Serving Frequency, stored during hard handoff.

$SF\_TOTAL\_EC\_THRESH_S$ – Threshold for total E_C of pilots in the Serving Frequency Active Set used in the Candidate Frequency periodic search procedures.

$SF\_TOTAL\_EC\_IO\_THRESH_S$ – Threshold for total E_C/I_O of pilots in the Serving Frequency Active Set used in the Candidate Frequency periodic search procedures.

SID_S – System identifier.

$SID\_NID\_LIST_S$ – Registration SID, NID list. The SID, NID pairs in which the mobile station has registered.

$SLOT\_CYCLE\_INDEX_S$ – Slot cycle index. This is a signed parameter that can take values between -4 and +7, inclusive. It is computed from the SLOT_CYCLE_INDEX_REG, and bounded by the minimum and maximum slot cycle indices allowed by the current base station.

SLOT_CYCLE_INDEX_REG – Slot cycle index registered. This is a signed parameter that can take values between -4 and +7, inclusive. It is computed based on the slot cycle index value included in the last registration attempt.

SLOT_NUM – Paging Channel or Forward Common Control Channel slot number.

SOFT_SLOPE$_S$ – The slope in the inequality criterion for adding a pilot to the Active Set, or dropping a pilot from the Active Set.

SO_REQ$_S$ – Service option request number. The number of the service option requested by the mobile station during service option negotiation.

SR1_BRAT_NON_TD$_S$ – Spreading Rate 1 Primary Broadcast Control Channel data rate with no transmit diversity.

SR1_BRAT_TD$_S$ – Spreading Rate 1 Primary Broadcast Control Channel data rate with transmit diversity.

SR1_CRAT_NON_TD$_S$ – Spreading Rate 1 coding rate with no transmit diversity.

SR1_CRAT_TD$_S$ – Spreading Rate 1 coding rate with transmit diversity.

SR1_TD_MODE$_S$ – Spreading Rate 1 transmit diversity mode in support of OTD or STS.

SR1_TD_LEVEL$_S$ – Spreading Rate 1 transmit diversity power level.

SR3_BRAT$_S$ – Data rate of the Broadcast Control Channel on SR3 frequencies.

SR3_PRIMARY_PILOT$_S$ – Frequency offset of the primary SR3 pilot.

SR3_PILOT_POWER1$_S$ – The power level of the primary pilot with respect to the pilot on the lower frequency of the two remaining SR3 frequencies.

SR3_PILOT_POWER2$_S$ – The power level of the primary pilot with respect to the pilot on the higher frequency of the two remaining SR3 frequencies.

SRCH_OFFSET_INCL$_S$ – Neighbor pilot search window offset included indicator.

SRCH_OFFSET_NGHBR$_S$ – Neighbor pilot search window offset.

SRCH_WIN_A$_S$ – Search window size for the Active Set and Candidate Set.

SRCH_WIN_NGHBR$_S$ – Neighbor Pilot Channel search window size.

SRCH_WIN_NGHBR_INCL$_S$ – Neighbor Pilot Channel search window size included indicator.

SRCH_WIN_N$_S$ – Search window size for the Neighbor Set.

SRCH_WIN_R$_S$ – Search window size for the Remaining Set.

START_TIME_UNIT$_S$ – A stored variable in the mobile station which contains the time unit used for determining FOR_SCH_START_TIME and REV_SCH_START_TIME on Supplemental Channels.

SYNC_ID$_S$ – Service Configuration Synchronization Identifier identifying the service configuration currently in use (i.e. Service Configuration information record and Non-negotiable Service Configuration information record).

SYS_PAR_MSG_SEQ$_S$ – *System Parameters Message* sequence number.

SYS_TIME$_S$ – Current value of CDMA system time as received in the *Sync Channel Message*.

TA – Acknowledgment response timeout.

T_ADD$_S$ – Pilot detection threshold. The stored value is a positive value in units of 0.5 dB.

T_COMP$_S$ – Active Set versus Candidate Set comparison threshold. The stored value is a positive value in units of 0.5 dB.

T_DROP$_S$ – Pilot drop threshold. The stored value is a positive value in units of 0.5 dB.

T_TDROP_RANGE$_S$ – Pilot drop timer range value.

T_SLOTTED$_S$ – Slotted timer, used for the slotted timer feature.

TAG$_S$ – Transaction identifier. This is a 4-bit parameter maintained by the mobile station which is used to uniquely identify a new call origination (via an *Enhanced Origination Message*) by the mobile station. When the mobile station is to send an *Enhanced Origination Message*, the mobile station increments the stored value of TAG and includes it in the message.

TAG_OUTSTANDING_LIST – List of outstanding TAG values. This corresponds to those values of TAG sent in the *Enhanced Origination Message* which have neither been accepted by the base station (by assigning the requested call) nor rejected by the base station.

TBR_RAND_SUPPR_ENABLE$_S$ – Flag to indicate if suppression of timer-based registration randomization based upon frequent implicit registrations is enabled.

TBR_RAND_WINDOW$_S$ – Indicates the window over which the next timer-based registration following call release is randomized.

TEMP_SUB$_S$ – User Zone temporary subscription flag.

TF_CDMABAND$_S$ – Target Frequency CDMA band class. The CDMA band class specified in the *Extended Handoff Direction Message* or the *General Handoff Direction Message*.

TF_CDMACH$_S$ – Target Frequency CDMA Channel number. The CDMA Channel number specified in the *Extended Handoff Direction Message* or the *General Handoff Direction Message*.

TF_RESET_FPC$_S$ – Flag to initialize the Forward Traffic Channel power control counters on the Target Frequency.

TF_RESET_L2$_S$ – Flag to reset acknowledgment procedures on the Target Frequency.

TF_T_ADD$_S$ – Pilot detection threshold to be used on the Target Frequency. The stored value is a positive value in units of 0.5 dB.

TF_WAIT_TIME$_S$ – Maximum time that the mobile station may wait to receive a period of ($N_{11m} \times 20$) ms with sufficient signal quality on the CDMA Target Frequency.

TKZ_ID$_S$ – Tracking zone identifier used while in tracking zone mode.

TKZ_LIST_LEN$_S$ – Number of tracking zone identifiers to be maintained in the tracking zone list while in tracking zone mode.

TKZ_MAX_NUM_MSG$_S$ – The maximum number of *Radio Environment Messages* that the mobile station is permitted to transmit while in the tracking zone mode.

TKZ_MODE_ENABLED – Flag that indicates whether the tracking zone mode is currently enabled at the mobile station.

TKZ_MODE_PENDING – Flag that indicates whether the tracking zone mode is currently pending at the mobile station. If the tracking zone mode is pending, then it becomes enabled when the radio environment reporting mode is disabled.

TKZ_MODE_SUPPORTED$_S$ – Base station support of tracking zone mode indicator.

TKZ_LIST – Tracking zone list. A list of most recent TKZ_IDs that the mobile station has received while in the tracking zone mode.

TMSI_ZONE$_S$ – TMSI zone number of the base station.

TMSI_ZONE_LEN$_S$ – The number of octets in TMSI zone.

T_MULCHAN$_S$ – The threshold offset that the mobile station is to use when reporting neighbor pilot strength measurements in a *Supplemental Channel Request Message*. The stored value is a positive value in units of 0.5 dB.

TOTAL_PUF_PROBES$_S$ – Maximum number of PUF probes transmitted in a PUF attempt.

TOTAL_ZONES$_S$ – Number of registration zones to be retained in ZONE_LIST$_S$.

TOT_FRAMES$_S$ – Total Forward Fundamental Channel frames received. The total number of received Forward Fundamental Channel frames, counted for Forward Traffic Channel power control.

TX_PWR_LIMIT$_S$ – Transmit Power Limit. If the mobile station is operating in the 1915MHz – 1920MHz block of the PCS band, the mobile station is to limit its transmission power to no more than the value indicated by this field.

T_TDROP$_S$ – Pilot drop timer value.

USE_ERAM$_S$ – Use ERAM indicator. Indicates whether ERAM is to be used on the flexible and variable data rate Supplemental Channel with turbo codes in RC4 and RC5 Forward Link and RC4 Reverse Link.

USE_FOR_HDM_SEQ$_S$ – Storage variable containing a flag indicating a pending *Supplemental Channel Assignment Message* forward assignment that is linked to a *General Handoff Direction Message*.

USE_REV_HDM_SEQ$_S$ – Storage variable containing a flag indicating a pending *Supplemental Channel Assignment Message* reverse assignment that is linked to a *General Handoff Direction Message*.

USE_T_ADD_ABORT$_S$ – A storage variable in the mobile station that contains the Reverse Supplement Code Channel assignment T_ADD abort indicator.

USE_TMSI$_S$ – Base station's preference of the use of TMSI.

USER_ZONE_ID$_S$ – *User Zone Identification Message* sent indicator.

USER_ZONE_ID_MSG_SEQ$_S$ – User Zone Identification Message sequence number.

UZ_EXIT_IN_USE$_S$ – The User Zone Exit parameter that the mobile station received from the *User Zone Identification Message* broadcast by the last base station of the old user zone.

$UZ\_EXIT\_RCVD_S$ – The User Zone Exit parameter that the mobile station just received from the *User Zone Identification Message* broadcast by the currently serving base station.

$UZID_S$ – User Zone identifier.

UZ_REC – Record containing information about a User Zone broadcast by the base station (see also UZ_REC_LIST).

UZ_REC_LIST – Broadcast User Zone record list. A descriptive structure used to manage the base station's information records about broadcast User Zones (see also UZ_REC).

UZ_REV_S – User Zone update revision number.

$ZONE\_LIST_S$ – Registration zone list. List of zones in which the mobile station has registered.

$ZONE\_TIMER_S$ – Zone timer length.

1.2 Signaling Architecture

Layer 3 signaling for cdma2000 is modeled as follows:

- **Protocol Layer**. Layer 3 generates Layer 3 PDUs and passes these PDUs to Lower Layers, where proper encapsulation into Lower Layer PDUs is performed. On the receiving end, Lower Layer PDUs are decapsulated and the resulting SDUs are sent from Lower Layers to Layer 3 for processing.
- **Service Access Points**. SAPs and corresponding communication primitives are defined between the Layer 3 and Lower Layers over the data plane. No SAPs are defined for communications through the control plane.

1.3 Signaling and Functionality

1.3.1 General Architecture

The general architecture is presented in Figure 1.3.1-1.

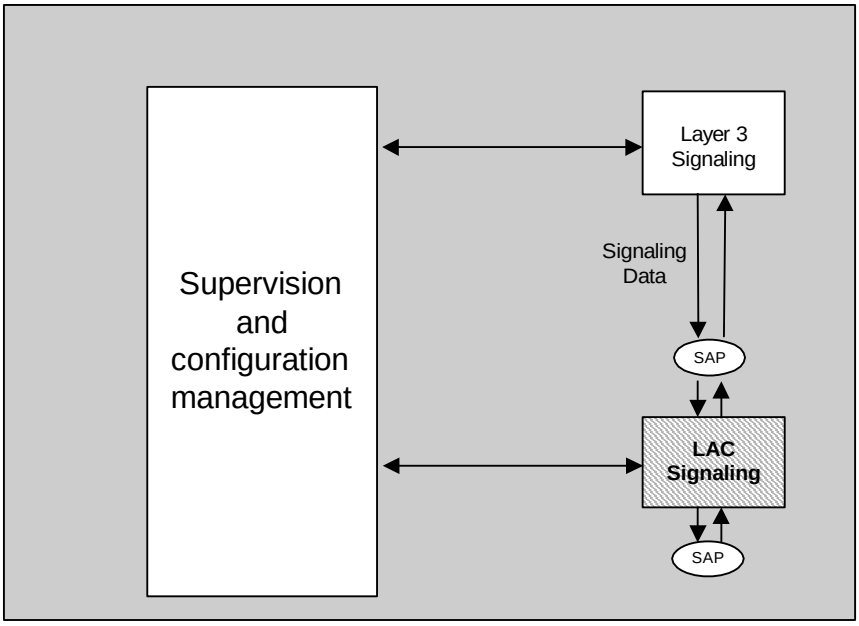

Figure 1.3.1-1. cdma2000 Signaling – General Architecture

1.3.2 Interface to Layer 2

The interface between Layer 3 and Layer 2 is a Service Access Point (SAP). At the SAP, Layer 3 and Layer 2 exchange Service Data Units (SDU) and interface control information in the form of Message Control and Status Blocks (MCSB) using a set of primitives.

1.3.2.1 Message Control and Status Block (MCSB)

The MCSB is a parameter block for the defined primitives, containing relevant information about an individual Layer 3 message (PDU), as well as instructions on how the message may be handled or how it is to be (for transmission), or was (for reception), processed by

Layer 2. The MCSB is a conceptual construct and is not subject to detailed specification in this document; see [4] for more information on the content of the MCSB.

1.3.2.2 Interface Primitives

The following primitives are defined for communication between the Layer 3 and Layer 2:

Name: **L2-Data.Request**
Type: Request
Direction: Layer 3 to Layer 2
Parameters: PDU, MCSB
Action: The PDU is handed to Layer 2 for delivery across the radio interface.

Name: **L2-Data.Confirm**
Type: Confirm
Direction: Layer 2 to Layer 3
Parameters: MCSB
Action: Reception of the specified (in the MCSB) transmitted PDU was acknowledged at Layer 2 by the addressee.

Name: **L2-Data.Indication**
Type: Indication
Direction: Layer 2 to Layer 3
Parameters: PDU, MCSB
Action: The received PDU is handed to Layer 3.

Name: **L2-Condition.Notification**
Type: Indication
Direction: Layer 2 to Layer 3
Parameters: MCSB
Action: Layer 3 is notified of a relevant event (e.g. abnormal condition) detected at Layer 2. Details are indicated via the MCSB.

Name: **L2-Supervision.Request**
Type: Request

Direction: Layer 3 to Layer 2

Parameters: MCSB

Action: Layer 2 executes a control command as directed by Layer 3. This could be, for example, an order to abandon retransmission of a message or an order for local reset for the message sequence number, acknowledgment sequence number and duplicate detection.

1.3.3 Reserved

1.3.4 Functional Description

In the Data Plane, Layer 3 originates and terminates signaling data units according to the semantic and timing of the communication protocol between the base station and the mobile station. From a semantic point of view the signaling data units are referred to as "messages" (or "orders"). From a protocol point of view, the signaling data units are PDUs. In general, the language of this specification does not explicitly distinguish between the terms "PDU" and "Message". It is considered that the context provides enough information to allow the reader to make the appropriate distinctions.

1.3.5 PDU Transmission and Reception

Layer 3 employs the services offered at the interface with Layer 2 to transfer PDUs to and from the Layer 3 entity.

When requesting the transmission of a PDU, Layer 3 will typically specify whether the transfer will be performed in *assured mode* or in *unassured mode* (for example, by setting the proper parameters in the MCSB argument of the L2-Data.Request primitive). For transmission in assured mode, Layer 3 may specify if *confirmation of delivery* of the PDU is required.

Layer 2 guarantees that an assured mode PDU received from the transmitting Layer 3 entity is delivered to the receiving Layer 3 entity. Each assured mode PDU is delivered to the receiving Layer 3 entity only once and without errors. Additionally, if the transmitting Layer 3 entity requests confirmation of delivery of an assured mode PDU, Layer 2 will send an indication to the transmitting Layer 3 entity (for example by using the L2-Data.Confirm primitive) when Layer 2 receives an acknowledgment for that PDU. If Layer 2 is not able to deliver an assured mode PDU, it sends an indication of the failure to Layer 3 which can then take corrective action.

Layer 2 does not guarantee that an unassured mode PDU received from the transmitting Layer 3 entity is delivered to the receiving Layer 3 entity. Thus, Layer 2 acknowledgments may not be required for unassured mode PDUs. To increase the probability of delivery of unassured mode PDUs, Layer 3 may request Layer 2 to send those PDUs multiple times in quick repeat sequence and rely on the duplicate detection capabilities of the receiver to achieve uniqueness of delivery.

Layer 3 can also request Layer 2 to perform a reset of the Layer 2 ARQ procedures (for example, by using the L2-Supervision.Request primitive).

This page intentionally left blank.

2. REQUIREMENTS FOR MOBILE STATION CDMA OPERATION

This section defines requirements that are specific to CDMA mobile station equipment and operation. A CDMA mobile station may support operation in one or more band classes.

2.1 Reserved

2.2 Reserved

2.3 Security and Identification

2.3.1 Mobile Station Identification Number

Mobile stations operating in the CDMA mode are identified by the International Mobile Subscriber Identity (IMSI).[9] Mobile Stations shall have two different identifiers, IMSI_T and IMSI_M. The IMSI consists of up to 15 numerical characters (0-9). The first three digits of the IMSI are the Mobile Country Code (MCC), and the remaining digits are the National Mobile Subscriber Identity (NMSI). The NMSI consists of the Mobile Network Code (MNC) and the Mobile Station Identification Number (MSIN). The IMSI structure is shown in Figure 2.3.1-1.

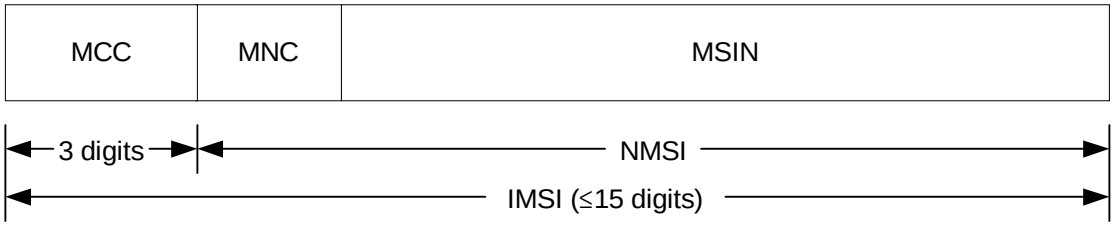

MCC Mobile Country Code
MNC Mobile Network Code
MSIN Mobile Station Identifier Number
NMSI National Mobile Station Identity
IMSI International Mobil Station Identity

Figure 2.3.1-1. IMSI Structure

An IMSI that is 15 digits in length is called a class 0 IMSI (the NMSI is 12 digits in length); an IMSI that is less than 15 digits in length is called a class 1 IMSI (the NMSI is less than 12 digits in length).

[9] See [18].

IMSI_M is an IMSI that contains a MIN in the lower ten digits of the NMSI. An IMSI_M is always a class 0 IMSI. If the IMSI_M is not programmed, the mobile station shall set the four least-significant digits of the IMSI_M to the value of the ESN_p, converted directly from binary to decimal, modulo 10000, and the mobile station shall set the other digits to 0.

IMSI_T is an IMSI that is not associated with the MIN assigned to the mobile station. An IMSI_T can be a class 0 or class 1 IMSI. If the IMSI_T is not programmed, the mobile station shall set the four least-significant digits of the IMSI_T to the value of the ESN_p, converted directly from binary to decimal, modulo 10000, and the mobile station shall set the other digits to 0.

When operating in the CDMA mode the mobile station shall set its operational IMSI value, IMSI_O, to either the IMSI_M or the IMSI_T depending on the capabilities of the base station (See 2.6.2.2.5).

An IMSI_S is a 10-digit (34-bit) number derived from the IMSI. When an IMSI has 15 digits, IMSI_S is equal to the least significant ten digits of the IMSI. When an IMSI has fewer than fifteen digits, zeros are added to the most significant side of MSIN to obtain a 15-digit padded IMSI; IMSI_S is equal to the last 10-digit of the padded IMSI.

A 10-digit IMSI_S consists of 3- and 7-digit parts, called IMSI_S2 and IMSI_S1, respectively, as illustrated in Figure 2.3.1-2. IMSI_S is mapped into a 34-bit number (see 2.3.1.1). The IMSI_S derived from IMSI_M is designated IMSI_M_S. The IMSI_S derived from IMSI_T is designated IMSI_T_S. The IMSI_S derived from IMSI_O is designated IMSI_O_S.

The mobile station shall have memory to store the 34-bit $IMSI\_M\_S_p$ and the 34-bit $IMSI\_T\_S_p$. $IMSI\_M\_S_p$ is represented by the 10-bit $IMSI\_M\_S2_p$ and the 24 bit $IMSI\_M\_S1_p$. $IMSI\_T\_S_p$ is represented by the 10-bit $IMSI\_T\_S2_p$ and the 24 bit $IMSI\_T\_S1_p$.

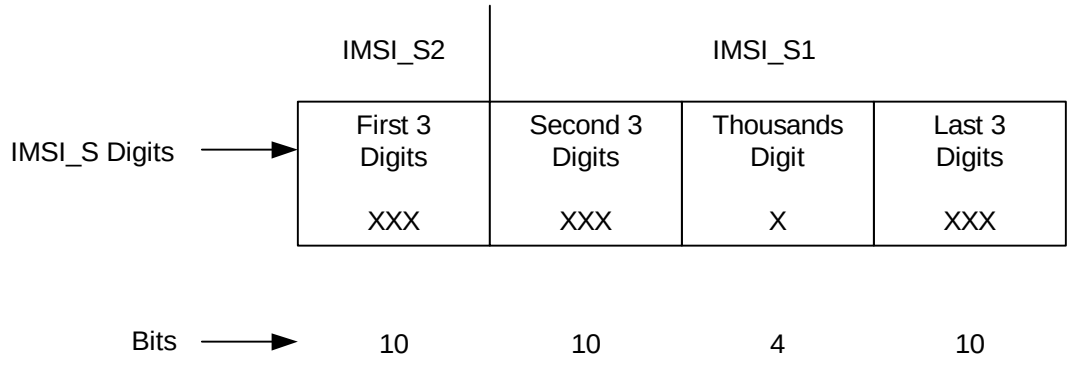

Figure 2.3.1-2. IMSI_S Binary Mapping

When an IMSI has 15 digits, IMSI_11_12 is equal to the 11th and 12th digits of the IMSI. When an IMSI has fewer than 15 digits, zeros are added to the most significant side of

MSIN to obtain a 15-digit padded IMSI; the IMSI_11_12 is equal to the 11th and 12th digits of the resulting number.

IMSI_11_12 is encoded as described in 2.3.1.2. The mobile station shall have memory to store the 7-bit $IMSI\_M\_11\_12_p$ and the 7-bit $IMSI\_T\_11\_12_p$.

The 3-digit MCC is encoded as described in 2.3.1.3. The mobile station shall have memory to store the 10-bit MCC_M_p and the 10-bit MCC_T_p.

If the mobile station has a class 1 IMSI_T, it shall have memory to store $IMSI\_T\_ADDR\_NUM_p$. $IMSI\_T\_ADDR\_NUM_p$ is equal to the number of digits in the NMSI[10] minus four.

2.3.1.1 Encoding of IMSI_M_S and IMSI_T_S

The IMSI_M_S and IMSI_T_S binary mapping is defined as follows:

1. The first three digits of the IMSI_M_S and the first three digits of the IMSI_T_S are mapped into ten bits (corresponding to $IMSI\_M\_S2_p$ and $IMSI\_T\_S2_p$, respectively) by the following coding algorithm:
   a. Represent these three digits as D_1 D_2 D_3 with the digit equal to zero being given the value of ten.
   b. Compute $100 \times D_1 + 10 \times D_2 + D_3 - 111$.
   c. Convert the result in step b to binary by the standard decimal-to-binary conversion as shown in Table 2.3.1.1-1.

[10] It is assumed that the number of digits in NMSI is greater than three.

Table 2.3.1.1-1. Decimal to Binary Conversion Table

Decimal Number	Binary Number
0	0000000000
1	0000000001
2	0000000010
3	0000000011
4	0000000100
•	•
•	•
•	•
998	1111100110
999	1111100111

2. The second three digits of IMSI_M_S and the second three digits of IMSI_T_S are mapped into the ten most significant bits of $IMSI\_M\_S1_p$ and $IMSI\_T\_S1_p$, respectively, by the coding algorithm indicated in 1.

3. The last four digits of IMSI_M_S and the last four digits of IMSI_T_S are mapped into the 14 least significant bits of $IMSI\_M\_S1_p$ and $IMSI\_T\_S1_p$, respectively, as follows:

   a. The thousands digit is mapped into four bits by a Binary-Coded-Decimal (BCD) conversion, as shown in Table 2.3.1.1-2.

   b. The last three digits are mapped into ten bits by the coding algorithm indicated in 1.

Table 2.3.1.1-2. BCD Mapping

Decimal Digit	Binary Number
1	0001
2	0010
3	0011
4	0100
5	0101
6	0110
7	0111
8	1000
9	1001
0	1010

The following example illustrates the IMSI_T_S2$_p$ and IMSI_T_S1$_p$ calculation procedure. Let the IMSI_T be the 9-digit number 123456789. Since the IMSI_T has fewer than ten digits, the nine least significant digits of the IMSI_T_S are equal to the IMSI_T digits and the most significant IMSI_T_S digit is set to zero. So the 10-digit IMSI_T_S is 012 345 6 789. IMSI_T_S2$_p$ and IMSI_T_S1$_p$ are calculated as follows:

- IMSI_T_S2$_p$. The ten-bit IMSI_T_S2$_p$ is derived from the first three digits of the IMSI_T_S (i.e., 012):

  a. D1 = 10; D2 = 1; D3 = 2.

  b. $100 \times D1 + 10 \times D2 + D3 - 111 = 100 \times 10 + 10 \times 1 + 2 - 111 = 901$.

  c. 901 in binary is ‘11 1000 0101’.

  Therefore, IMSI_T_S2$_p$ is ‘11 1000 0101’.

- IMSI_T_S1$_p$. The ten most significant bits of IMSI_T_S1$_p$ are derived from the second three digits of the IMSI_T_S (i.e., 345):

  a. D1= 3; D2 = 4; D 3 = 5.

  b. $100 \times D1 + 10 \times D2 + D3 - 111 = 100 \times 3 + 10 \times 4 + 5 - 111 = 234$.

  c. 234 in binary is ‘0011 1010 10’.

The next four most significant bits of IMSI_T_S1$_p$ are derived from the thousands digit of the IMSI_T_S (i.e., 6) by BCD conversion: 6 in BCD is ‘0110’.

The ten least significant bits of IMSI_T_S1$_p$ are derived from the last three digits of the IMSI_T_S (i.e., 789):

a. $D_1 = 7$; $D_2 = 8$; $D_3 = 9$.

b. $100 \times D_1 + 10 \times D_2 + D_3 - 111 = 100 \times 7 + 10 \times 8 + 9 - 111 = 678$.

c. 678 in binary is '10 1010 0110'.

Therefore, $IMSI\_T\_S1_p$ is '0011 1010 1001 1010 1010 0110'.

2.3.1.2 Encoding of IMSI_M_11_12 and IMSI_T_11_12

The IMSI_M_11_12 and IMSI_T_11_12 binary mapping is defined as follows:

1. Represent the 11th digit as D_{11} and the 12th digit as D_{12} with the digit equal to zero being given the value of ten.
2. Compute $10 \times D_{12} + D_{11} - 11$.
3. Convert the result in step 2 to binary by a standard decimal-to-binary conversion as described in Table 2.3.1.1-1 and limit the resulting number to the 7 least significant bits.

2.3.1.3 Encoding of the MCC_M and MCC_T

The MCC_M and MCC_T binary mapping is defined as follows:

1. Represent the 3-digit Mobile Country Code as D_1 D_2 D_3 with the digit equal to zero being given the value of ten.
2. Compute $100 \times D_1 + 10 \times D_2 + D_3 - 111$.
3. Convert the result in step (2) to binary by a standard decimal-to-binary conversion as described in Table 2.3.1.1-1.

2.3.1.4 Mobile Directory Number

A Mobile Directory Number (MDN) is a dialable number associated with the mobile station through a service subscription. A Mobile Directory Number is not necessarily the same as the mobile station identification on the air interface, i.e., MIN, IMSI_M or IMSI_T. An MDN consists of up to 15 digits. The mobile station should have memory to store at least one Mobile Directory Number (see Table F.3-1).

2.3.2 Electronic Serial Number (ESN), R-UIM Identifier (UIM_ID), and Mobile Equipment Identifier (MEID)

The mobile station shall be configured with 32-bit ESN or 56-bit MEID, but not both. All mobile stations with $MOB\_P\_REV_p$ less than 11 shall be configured with ESN. All mobile stations with $MOB\_P\_REV_p$ greater than or equal to 11 shall be configured with MEID. The ESN or MEID is used to uniquely identify a mobile station in a wireless system.

2.3.2.1 Electronic Serial Number (ESN)

The ESN value is available to procedures in the mobile station as the value of the variable ESN_p. The value of the variable $RN\_HASH\_KEY_s$ is the same as the value of the variable ESN_p, and need not be stored separately.

2.3.2.2 Mobile Equipment Identifier (MEID)

The MEID value is available to procedures in the mobile station as the value of the

variable $MEID_p$. If the mobile station is configured with MEID, ESN_p stores 32-bit pseudo-ESN value derived from MEID as defined in 2.3.2.2.1.

2.3.2.2.1 Pseudo-ESN

Pseudo-ESN is a 32-bit identifier derived from MEID.

Mobile station shall use the following procedure to derive pseudo-ESN from MEID[11]:

1. The upper 8 bits of pseudo-ESN shall be set to 0x80.
2. The lower 24 bits of pseudo-ESN shall be the 24 least significant bits of the SHA-1 digest of the MEID. See [41] for the specification of the SHA-1 algorithm.

2.3.2.3 R-UIM Identifier (UIM_ID, EXT_UIM_ID)

If the mobile station has a R-UIM which indicates that UIM ID is to be used, then the mobile station shall use UIM_ID instead of ESN in every place where ESN is used in this document with the exception of the ESN_ME information record (see [40]).

If the mobile station has a R-UIM which indicates that SF_EUIMID is to be used in place of MEID, then the mobile station shall use SF_EUIMID instead of MEID in every place where MEID is used in this document with the exception of the MEID_ME information record (see [40]).

2.3.3 Station Class Mark

Class-of-station information referred to as the station class mark (SCM_p) must be stored in a mobile station. The digital representation of this class mark is specified in Table 2.3.3-1.

[11] Example: if the 56-bit MEID is (hexadecimal) FF 00 00 01 12 34 56, the pseudo-ESN is (hexadecimal) 80 07 37 E1.

Table 2.3.3-1. Station Class Mark

Function	Bit(s)	Setting
Extended SCM Indicator	7	Band Classes 1,4,14 1XXXXXXX Other bands 0XXXXXXX
Dual Mode	6	Always 0[12] (CDMA Only) X0XXXXXX
Slotted Class	5	Non-Slotted XX0XXXXX Slotted XX1XXXXX
MEID support indicator[13]	4	MEID not configured XXX0XXXX MEID configured XXX1XXXX
25 MHz Bandwidth	3	Always 1 XXXX1XXX
Transmission	2	Continuous XXXXX0XX Discontinuous XXXXX1XX
Power Class for Band Class 0 Analog Operation	1 - 0	Always 00[14] XXXXXX00

The mobile station shall set the Power Class function bits to ‘00’.

The mobile station shall set bit 4 (MEID support indicator) of the Station Class Mark field to ‘1’ in the *Registration Message*, *Origination Message*, *Page Response Message*, *Terminal Information* and *Extended Terminal Information* information record.

2.3.4 Registration Memory

The mobile station shall have memory to store one element in the zone-based registration list $ZONE\_LIST_{s\text{-}p}$ (see 2.6.5.1.5 and 2.6.5.5). This stored element shall include both REG_ZONE and the corresponding (SID, NID) pair. The data retention time under power-off conditions shall be at least 48 hours. If, after 48 hours, the data integrity cannot be guaranteed, then the entry in $ZONE\_LIST_{s\text{-}p}$ shall be deleted upon power-on.

---

[12] ‘Dual Mode’ bit is always set to ‘0’ to indicate ‘CDMA only’ mode.

[13] The corresponding bit ‘4’ was previsouly defined as the IS-54 Power Class which was always set to ‘0’. The base station uses this field to identify mobile stations that comply with [47].

[14] ‘Power Class for Band Class 0 Analog Operation’ bits are always set to ‘00’ to indicate mobile station does not support analog mode operation.

The mobile station shall have memory to store one element in the system/network registration list $SID\_NID\_LIST_{s-p}$ (see 2.6.5.1.5 and 2.6.5.5). The data retention time under power-off conditions shall be at least 48 hours. If, after 48 hours, the data integrity cannot be guaranteed, then the entry in $SID\_NID\_LIST_{s-p}$ shall be deleted upon power-on.

The mobile station shall have memory to store the distance-based registration variables $BASE\_LAT\_REG_{s-p}$, $BASE\_LONG\_REG_{s-p}$, and $REG\_DIST\_REG_{s-p}$ (see 2.6.5.1.4 and 2.6.5.5). The data retention time under power-off conditions shall be at least 48 hours. If, after 48 hours, the data integrity cannot be guaranteed, then $REG\_DIST\_REG_{s-p}$ shall be set to zero upon power-on.

2.3.5 Access Overload Class

The 4-bit access overload class indicator ($ACCOLC_p$) is used to identify which overload class controls access attempts by the mobile station and is used to identify redirected overload classes in global service redirection.

The mobile station shall store 4-bit access overload class ($ACCOLC_p$). Mobile stations that are not for test or emergency use should be assigned to overload classes ACCOLC 0 through ACCOLC 9. For mobile stations that are classified as overload classes ACCOLC 0 through ACCOLC 9, the mobile station's 4-bit access overload class indicator ($ACCOLC_p$) shall be automatically derived from the last digit of the associated decimal representation of the IMSI_M by a decimal to binary conversion as specified in Table 2.3.5-1. When a mobile station's IMSI_M is updated, the mobile station shall re-calculate the $ACCOLC_p$ as indicated above. Mobile stations designated for test use should be assigned to ACCOLC 10; mobile stations designated for emergency use should be assigned to ACCOLC 11. ACCOLC 12 through ACCOLC 15 are reserved.[15] Programming the 4-bit $ACCOLC_p$ for overload classes ACCOLC 10 through ACCOLC 15 as specified in Table 2.3.5-2 shall require a special facility only available to equipment manufacturers and system operators.

The content of $ACCOLC_p$ shall not be visible through the mobile station's display.

[15] For more information, refer to [28].

Table 2.3.5-1. ACCOLCp Mapping for ACCOLC 0 through ACCOLC 9

Last Digit of the Decimal Representation of the IMSI (decimal)	$ACCOLC_p$
0	0000
1	0001
2	0010
3	0011
4	0100
5	0101
6	0110
7	0111
8	1000
9	1001

Table 2.3.5-2. ACCOLCp Mapping for ACCOLC 10 through ACCOLC 15

Overload Class (decimal)	$ACCOLC_p$
10	1010
11	1011
12	1100
13	1101
14	1110
15	1111

2.3.6 Public Long Code Mask and Private Long Code Mask

The Public Long Code Mask and the Private Long Code Mask consist of 42 bits (see [2]).

When using a Public Long Code Mask, the long code mask is generated based on the value of $PLCM\_TYPE_S$. When using the Private Long Code Mask, the value of $PLCM\_TYPE_S$ is maintained unless updated by the base station.

2.3.6.1 Public Long Code Mask Formats

The 42 bit Public Long Code Mask PLCM_42 is generated using PLCM_37 or PLCM_40 as defined in section 2.3.6.1.1, where the least significant bits PLCM_37 or PLCM_40 are set

as defined in this section below.

The 42 bit Public Long Code Mask ADD_PLCM_FOR_FCH_42 is generated using ADD_PLCM_FOR_FCH_40 as defined in section 2.3.6.1.1, where the least significant bits ADD_PLCM_FOR_FCH_40 are set as defined in this section below.

The 42 bit Public Long Code Mask ADD_PLCM_FOR_SCH_42 is generated using ADD_PLCM_FOR_SCH_35 as defined in section 2.3.6.1.1, where the least significant bits ADD_PLCM_FOR_SCH_35 are set as defined in this section below.

If $PLCM\_TYPE_s$ is equal to '0000', the 37 least significant bits (PLCM_37) are set as follows:

- Bits M_{36} through M_{32} shall be set to '11000';
- Bits M_{31} through M_0 shall be set to a permutation of the mobile station's ESN as follows:

$$ESN = (E_{31}, E_{30}, E_{29}, E_{28}, E_{27}, E_{26}, E_{25}, \ldots E_2, E_1, E_0)$$

$$\text{Permuted ESN} = (E_0, E_{31}, E_{22}, E_{13}, E_4, E_{26}, E_{17}, E_8, E_{30}, E_{21}, E_{12}, E_3, E_{25}, E_{16}, E_7, E_{29}, E_{20}, E_{11}, E_2, E_{24}, E_{15}, E_6, E_{28}, E_{19}, E_{10}, E_1, E_{23}, E_{14}, E_5, E_{27}, E_{18}, E_9).$$

If $PLCM\_TYPE_s$ is equal to '0001', the 40 least significant bits (PLCM_40) are set as follows:

- Bit M_{39} shall be set to '1';
- Bits M_{38} through M_0 of the public long code mask shall be specified by $PLCM\_39_s$ and shall be set as follows:

$$PLCM\_39_s = (P_{38}, P_{37}, P_{36}, P_{35}, P_{34}, P_{33}, P_{32}, \ldots P_2, P_1, P_0)$$

If $ADD\_PLCM\_FOR\_FCH\_TYPE_s$ is equal to '1', the 40 least significant bits (ADD_PLCM_FOR_FCH_40) are set as follows:

- Bit M_{39} shall be set to '1';
- Bits M_{38} through M_0 of the public long code mask shall be specified by $ADD\_PLCM\_FOR\_FCH\_39_s$ and shall be set as follows:

$$ADD\_PLCM\_FOR\_FCH\_39_s = (P_{38}, P_{37}, P_{36}, P_{35}, P_{34}, P_{33}, P_{32}, \ldots P_2, P_1, P_0)$$

If $ADD\_PLCM\_FOR\_SCH\_TYPE_s$ is equal to '1', the 35 least significant bits (ADD_PLCM_FOR_SCH_35) are set as follows:

- Bits M_{34} through M_0 of the public long code mask shall be specified by $ADD\_PLCM\_FOR\_SCH\_35_s$ and shall be set as follows:

$$ADD\_PLCM\_FOR\_SCH\_35_s = (P_{34}, P_{33}, P_{32}, P_{31}, P_{30}, P_{29}, P_{28}, \ldots P_2, P_1, P_0)$$

If $PLCM\_TYPE_s$ is equal to '0010', the 37 least significant bits (PLCM_37) are set as follows:

- Bits M_{36} through M_{34} shall be set to '001';
- Bits M_{33} through M_0 shall be set to IMSI_O_S.

If $PLCM\_TYPE_s$ is equal to '0011', the 37 least significant bits (PLCM_37) are set as follows:

- Bits M_{36} through M_{34} shall be set to '000';
- Bits M_{33} through M_0 shall be set to IMSI_O_S.

If $PLCM\_TYPE_s$ is equal to '0100', the 40 least significant bits (PLCM_40) are set as follows:

- Bit M_{39} shall be set to '0';
- Bits M_{38} through M_0 shall be set as follows:
- The 39 least significant bits of the SHA-1 digest of the MEID[16]. See [41] for the specification of the SHA-1 algorithm.

2.3.6.1.1 Public Long Code Mask PLCM_42, ADD_PLCM_FOR_FCH_42 and ADD_PLCM_FOR_SCH_42

If PLCM_37 is defined, the public long code mask PLCM_42 shall be as follows: bits M_{36} through M_0 of the public long code mask shall be specified by PLCM_37 (see 2.3.6). Bits M_{41} through M_{37} shall be set to '11000'. The resulting public long code mask PLCM_42 is shown in Figure 2.3.6.1-1 (a).

If PLCM_40 is defined, the public long code mask PLCM_42 shall be as follows: bits M_{39} through M_0 of the public long code mask shall be specified by PLCM_40 (see 2.3.6.1). Bits M_{41} through M_{40} shall be set to '10'. The resulting public long code mask PLCM_42 is shown in Figure 2.3.6.1-1 (b).

If ADD_PLCM_FOR_FCH_40 is defined, the public long code mask ADD_PLCM_FOR_FCH_42 shall be as follows: bits M_{39} through M_0 of the public long code mask shall be specified by ADD_PLCM_FOR_FCH_40 (see 2.3.6.1). Bits M_{41} through M_{40} shall be set to '10'. The resulting public long code mask ADD_PLCM_FOR_FCH_42 is shown in Figure 2.3.6.1-1 (c).

If ADD_PLCM_FOR_SCH_35 is defined, the public long code mask ADD_PLCM_FOR_SCH_42 shall be as follows: bits M_{34} through M_0 of the public long code mask shall be specified by ADD_PLCM_FOR_SCH_35 (see 2.3.6.1). Bits M_{41} through M_{35} shall be set to '1100111'. The resulting public long code mask ADD_PLCM_FOR_SCH_42is shown in Figure 2.3.6.1-1 (d).

[16] Example: if the 56-bit MEID is (hexadecimal) FF 00 00 01 12 34 56, the bits M_{38} through M_0 of PLCM are (hexadecimal) 1A 0E 07 37 E1, and (binary) '001 1010 0000 1110 0000 0111 0011 0111 1110 0001'.

41 40	39 ... 37	36 ... 0
11	000	PLCM_37

a) Public Long Code Mask PLCM_42 given PLCM_37

41 40	39 ... 0
10	PLCM_40

b) Public Long Code Mask PLCM_42 given PLCM_40

41 40	39 ... 0
10	ADD_PLCM_FOR_FCH_40

c) Public Long Code Mask ADD_PLCM_FOR_FCH_42 given ADD_PLCM_FOR_FCH_40

41 35	34 ... 0
1100111	ADD_PLCM_FOR_SCH_35

d) Public Long Code Mask ADD_PLCM_FOR_SCH_42 given ADD_PLCM_FOR_SCH_35

Figure 2.3.6.1-1. Public Long Code Mask PLCM_42, ADD_PLCM_FOR_FCH_42, or ADD_PLCM_FOR_SCH_42 Format

2.3.6.2 Private Long Code Mask PVTLCM_42

The 42 bit private long code mask PVTLCM_42 shall be as follows: Bits M_{41} through M_{40} shall be set to '01'. Bits M_{39} through M_0 shall be the 40 least significant bits of the Voice Privacy Mask (VPM) generated by the Key_VPM_Generation procedure or CDMA_3G_2G_Conversion procedure. M_0 of the private long code mask shall be the least significant bit of the VPM. See [15] for details of the Key_VPM_Generation procedure and see [44] for details of the CDMA_3G_2G_Conversion procedure. The resulting private long code mask PVTLCM_42 is shown in Figure 2.3.6.2-1.

41 40	39 ... 0
01	40 LSBs of VPM

Figure 2.3.6.2-1 Private Long Code Mask PVTLCM_42 Format

2.3.7 Reserved

2.3.8 Home System and Network Identification

The mobile station shall provide memory to store at least one home (SID_p, NID_p) pair. The mobile station shall also provide memory to store the 1-bit parameters $MOB\_TERM\_HOME_p$, $MOB\_TERM\_FOR\_SID_p$, and $MOB\_TERM\_FOR\_NID_p$ (see 2.6.5.3).

2.3.9 Local Control Option

If the mobile station supports the local control option, a means shall be provided within the mobile station to enable or disable the local control option.

2.3.10 Preferred Operation Selection

2.3.10.1 Preferred System

If the mobile station supports operation in Band Class 0 or Band Class 3 (see [2]), a means shall be provided within the mobile station to identify the preferred system. In addition, the mobile station may provide a means for allowing operation only with System A or only with System B.

2.3.10.2 Reserved

2.3.11 Discontinuous Reception

The mobile station shall provide memory to store the preferred slot cycle index, $SLOT\_CYCLE\_INDEX_p$ (see 2.6.2.1.1.3.2).

2.3.12 Authentication, Encryption of Signaling Information/User Data and Voice Privacy

2.3.12.1 Authentication

Authentication is the process by which information is exchanged between a mobile station and base station for the purpose of confirming the identity of the mobile station. A successful outcome of the authentication process occurs only when it can be demonstrated that the mobile station and base station possess identical sets of shared secret data.

The authentication algorithms are described in [15]. The interface (input and output parameters) for the algorithms is described in [23], Table 2.3.12.1-1 summarizes the setting of the input parameters of the Auth_Signature procedure for each of its uses in this standard.

For authentication purposes, the mobile station shall use IMSI_M if it is programmed; otherwise, the mobile station shall use IMSI_T. The base station uses the IMSI selected according to the same criteria.

Table 2.3.12.1-1. Auth_Signature Input Parameters

Procedure	RAND_CHALLENGE	ESN	AUTH_ DATA	SSD_ AUTH	SAVE_ REGISTERS
Unique Challenge (2.3.12.1.4)	RANDU and 8 LSBs of IMSI_S2	ESN_p	IMSI_S1	SSD_A	TRUE if GEN_CMEAKEY is set to 1 in the AUCM; otherwise FALSE

2.3.12.1.1 Shared Secret Data (SSD)

SSD is a 128-bit quantity that is stored in semi-permanent memory in the mobile station and is readily available to the base station. As depicted in Figure 2.3.12.1.1-1, SSD is partitioned into two distinct subsets. Each subset is used to support a different process.

Contents	SSD_A	SSD_B
Length (bits)	64	64

Figure 2.3.12.1.1-1. Partitioning of SSD

SSD_A is used to support the authentication procedures and SSD_B is used to support voice privacy (see 2.3.12.3) and message encryption (see 2.3.12.2). SSD is generated according to the procedure specified in 2.3.12.1.5. The SSD shall not be accessible to the user.

2.3.12.1.2 Random Challenge Memory (RAND)

RAND is a 32-bit value held in the mobile station. When operating in CDMA mode, it is equal to the RAND value received in the last *Access Parameters Message* (see 3.7.2.3.2.2) or the *ANSI-41 RAND Message* (see 3.7.2.3.2.31) of the CDMA f-csch.

$RAND_s$ is used in conjunction with SSD_A and other parameters, as appropriate, to authenticate mobile station originations, terminations and registrations.

2.3.12.1.3 Call History Parameter ($COUNT_{s-p}$)

$COUNT_{s-p}$ is a modulo-64 count held in the mobile station. $COUNT_{s-p}$ is updated by the mobile station when a *Parameter Update Order* is received on the f-dsch (see 3.7.4).

2.3.12.1.4 Unique Challenge-Response Procedure

The Unique Challenge-Response Procedure is initiated by the base station and can be carried out either on the f-csch and r-csch, or on the f-dsch and r-dsch. The procedure is as follows:

The base station generates the 24-bit quantity RANDU and sends it to the mobile station in the *Authentication Challenge Message* on either the f-csch or f-dsch. Upon receipt of the *Authentication Challenge Message*, the mobile station shall set the input parameters of the Auth_Signature procedure (see [23] section 2.3) as illustrated in Figure 2.3.12.1.5-3. The 24 most significant bits of the RAND_CHALLENGE input parameter shall be filled with RANDU, and the 8 least significant bits of RAND_CHALLENGE shall be filled with the 8 least significant bits of IMSI_S2.

The mobile station shall set the SAVE_REGISTERS input parameter to TRUE if the GEN_CMEAKEY field is set to ‘1’ and FALSE if the GEN_CMEAKEY is set to ‘0’.

The mobile station shall then execute the Auth_Signature procedure. The 18-bit output AUTH_SIGNATURE shall be used to fill the AUTHU field of the *Authentication Challenge Response Message*, which shall be sent to the base station.

The base station computes the value of AUTHU in the same manner as the mobile station, but using its internally stored value of SSD_A. The base station compares its computed value of AUTHU to the value received from the mobile station. If the comparison fails, the base station may deny further access attempts by the mobile station, drop the call in progress, or initiate the process of updating SSD (see 2.3.12.1.5).

Upon receiving delivery confirmation for the *Authentication Challenge Response Message* from the LAC layer indicating a successful Unique Challenge, MS may perform the following procedure: If GEN_CMEAKEY was set to ‘1’ in the *Authentication Challenge Message* and either of the following conditions is met:

- If neither encryption nor integrity protection is turned on and mobile station wants to turn on encryption or integrity protection or both.
- If the encryption or integrity protection is turned on and mobile station wants to switch to new keys based on new SSD.

the mobile station shall perform the following procedures:

- If MSG_INTEGRITY_SUPs is equal to ‘1’, the mobile station then associates a pending key id NEW_KEY_ID with the pending CMEAKEY.
- The mobile station shall send a *Security Mode Request Message*. If MSG_INTEGRITY_SUPs is equal to ‘0’, the mobile station shall select a 24-bit number and include this number in the NEW_SSEQ_H field in the *Security Mode Request Message*; otherwise, the mobile station shall select a 24-bit number and deliver this number to the LAC Layer along with the *Security Mode Request Message*.

- Upon reception of the *Security Mode Request Message*, the base station validates the NEW_SSEQ_H_SIG field in the message. If validation returns success, then the CMEAKEY associated with the AUTHU generated during Unique Challenge-Response procedure and the pending NEW_SSEQ_H can become "in use" in the base station. If Voice Privacy was enabled during this procedure, the base station shall indicate to the mobile station to disable Voice Privacy. The base station then confirms the key set-up by sending the *Security Mode Command Message* to the mobile station. Upon reception of *Security Mode Command Message*, the CMEAKEY associated with the AUTHU generated during Unique Challenge-Response procedure, the pending NEW_SSEQ_H and key id become "in use" for the mobile station.

2.3.12.1.5 Updating the Shared Secret Data (SSD)

SSD is updated using the SSD_Generation procedure (see [23], section 2.2.1), initialized with mobile station specific information, random data, and the mobile station's A-key. The A-key is 64 bits long. It is assigned to the mobile station and is stored in the mobile station's permanent security and identification memory. The A-key is known only to the mobile station and to its associated Home Location Register/Authentication Center (HLR/AC) (see [13]). Non-manual methods, such as described in [26], are preferred for entry of the A-key into the mobile station. A manual method of entry that may be used when automated methods are not available is described in [29].

The SSD update procedure is performed as follows (see Figure 2.3.12.1.5-1):

The base station sends an *SSD Update Message* on either the f-csch or the f-dsch. The RANDSSD field of the *SSD Update Message* contains the same value used for the HLR/AC computation of SSD.

Upon receipt of the *SSD Update Message* the mobile station shall set the input parameters of the SSD_Generation procedure (see [23], section 2.2.1) as illustrated in Figure 2.3.12.1.5-2. The mobile station shall then execute the SSD_Generation procedure. The mobile station shall set SSD_A_NEW and SSD_B_NEW to the outputs of the SSD_Generation procedure.

The mobile station shall then select a 32-bit random number, RANDBS, and shall send it to the base station in a *Base Station Challenge Order* on the r-csch or r-dsch.

Both the mobile station and the base station shall then set the input parameters of the Auth_Signature procedure (see [23], section 2.3) as illustrated in Figure 2.3.12.1.5-3 and shall execute the Auth_Signature procedure.

The mobile station and base station shall set the SAVE_REGISTERS input parameter to FALSE.

The mobile station and base station shall execute the Auth_Signature procedure. AUTHBS is set to the 18-bit result AUTH_SIGNATURE. The base station sends its computed value of AUTHBS to the mobile station in a *Base Station Challenge Confirmation Order* on the f-csch or the f-dsch.

Upon receipt of the *Base Station Challenge Confirmation Order* the mobile station shall compare the received value of AUTHBS to its internally computed value. (If the mobile station receives a *Base Station Challenge Confirmation Order* when an SSD update is not in progress, the mobile station shall respond with an *SSD Update Rejection Order*.)

If the comparison is successful, the mobile station shall execute the SSD_Update procedure (see [23], section 2.2.2) to set SSD_A and SSD_B to SSD_A_NEW and SSD_B_NEW, respectively. The mobile station shall then send an *SSD Update Confirmation Order* to the base station, indicating successful completion of the SSD update.

If the comparison is not successful, the mobile station shall discard SSD_A_NEW and SSD_B_NEW. The mobile station shall then send an *SSD Update Rejection Order* to the base station, indicating unsuccessful completion of the SSD update.

Upon receipt of the *SSD Update Confirmation Order*, the base station sets SSD_A and SSD_B to the values received from the HLR/AC (see [13]).

If the mobile station fails to receive the *Base Station Challenge Confirmation Order* within T_{64m} seconds of when the acknowledgment to the *Base Station Challenge Order* was received, the mobile station shall discard SSD_A_NEW and SSD_B_NEW. The mobile station shall then terminate the SSD update process.

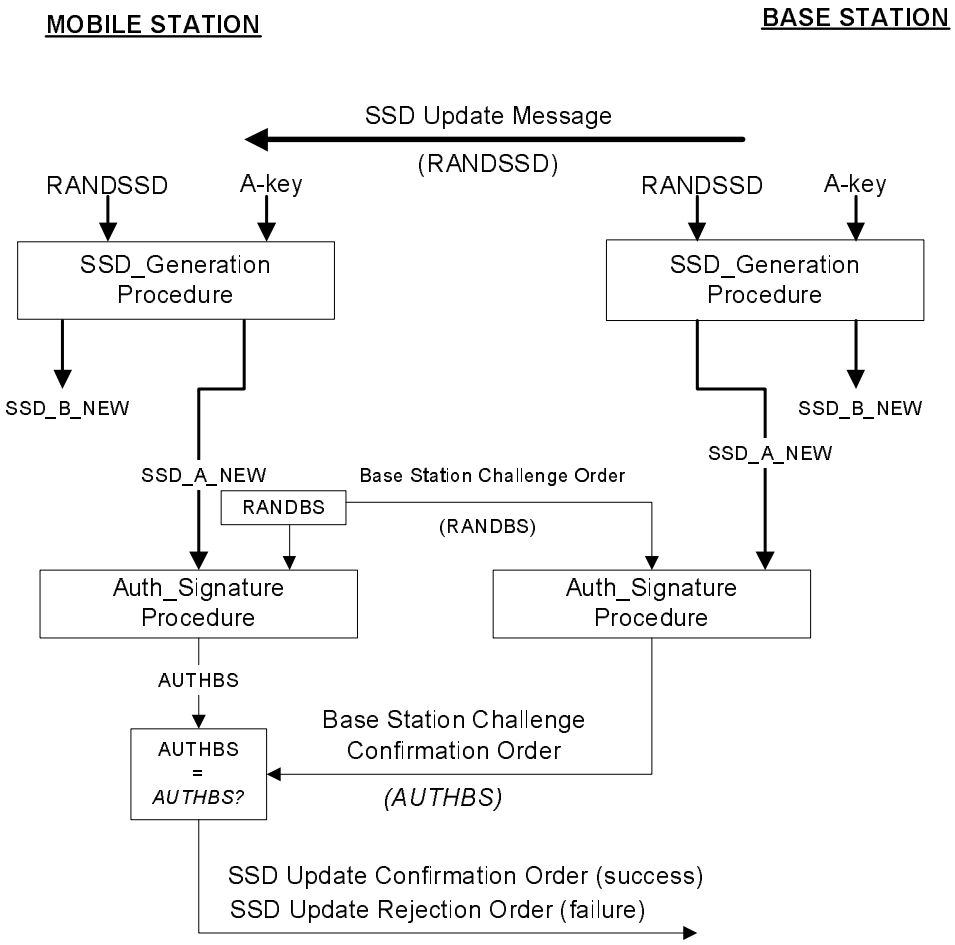

Figure 2.3.12.1.5-1. SSD Update Message Flow

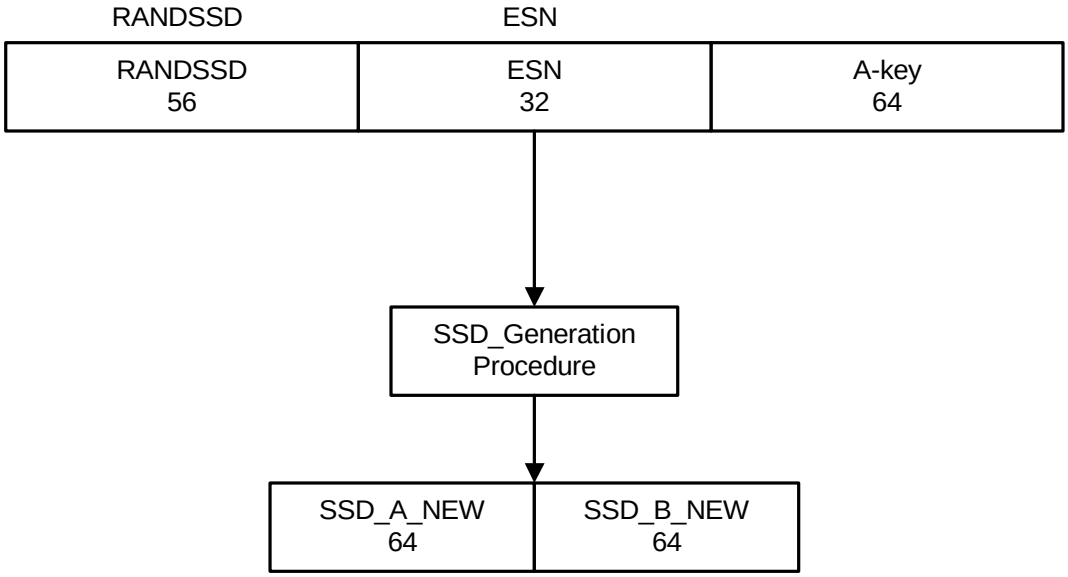

Figure 2.3.12.1.5-2. Computation of Shared Secret Data (SSD)

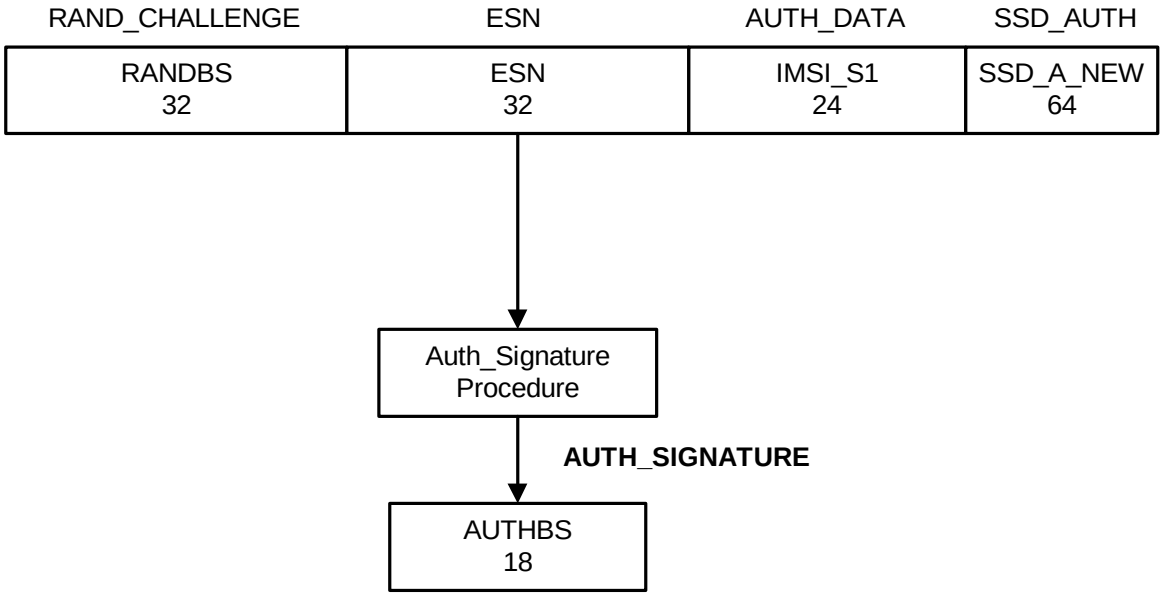

Figure 2.3.12.1.5-3. Computation of AUTHBS

2.3.12.2 Signaling Message Encryption

In an effort to enhance the authentication process and to protect sensitive subscriber information (such as PINs), a method is provided to encrypt certain fields of selected f-dsch or r-dsch signaling messages.

The following is a description of the messages on f-dsch (see 2.3.12.2.1) and r-dsch (see 2.3.12.2.2) that are enciphered using the Cellular Message Encryption Algorithm (see section 2.5.1, [15]) or the Enhanced Cellular Message Encryption Algorithm (see section 2.5.2, [15]), and when ENCRYPT_MODE_S is set to '01' or '10'. The availability of encryption algorithm information is under government control.

For each message, the enciphered fields are identified. The messages are grouped by channel designation.

Messages shall not be encrypted if authentication is not performed (AUTH_S is set to '00'). See [23] for details of the initialization and use of the encryption procedure.

Signaling message encryption is controlled for each call individually. If P_REV_IN_USE_S is less than or equal to six, the mobile station identifies its encryption capability in the ENCRYPTION_SUPPORTED field in *the Origination Message* and the *Page Response Message* as shown in Table 2.7.1.3.2.4-5. If P_REV_IN_USE_S is greater than or equal to seven, the mobile station identifies its encryption capability in the SIG_ENCRYPT_SUP field in *Registration Message*, *Origination Message*, *Page Response Message*, *Security Mode Request Message*, and the encryption capability information record in *Status Response Message* and *Extended Status Response Message*, as shown in Table 2.7.1.3.2.1-5. The initial encryption mode for the call is established by setting the ENCRYPT_MODE field to '00', '01', or '10' in the *Channel Assignment Message* or in the *Extended Channel Assignment Message*. If ENCRYPT_MODE is set to '00', message encryption is off. To turn encryption on after channel assignment, the base station sends one of the following f-dsch messages to the mobile station:

- *Extended Handoff Direction Message* with the ENCRYPT_MODE field set to '01' or '10'
- *General Handoff Direction Message* with the ENCRYPT_MODE field set to '01' or '10'
- *Universal Handoff Direction Message* with the ENCRYPT_MODE field set to '01' or '10'
- *Message Encryption Mode Order* with the ENCRYPT_MODE field set to '01' or '10'

To turn signaling message encryption off, the base station sends one of the following f-dsch messages to the mobile station:

- *Extended Handoff Direction Message* with the ENCRYPT_MODE field set to '00'
- *General Handoff Direction Message* with the ENCRYPT_MODE field set to '00'
- *Universal Handoff Direction Message* with the ENCRYPT_MODE field set to '00'
- *Message Encryption Mode Order* with the ENCRYPT_MODE field set to '00'

Encryption shall apply only to the part of the Layer 3 message specified below.

When encryption is off, all fields of all Layer 3 messages sent by the mobile station and base station are unencrypted.

When additional octets are inserted, the overall Lower Layers message length is updated to reflect the addition. Specific Layer 3 record length fields (e.g., RECORD_LEN, NUM_FIELDS, or NUM_DIGITS) shall not be affected by the insertion of additional bits.

If the Enhanced Cellular Message Encryption Algorithm is used, the following requirements apply:

- The mobile station and base station shall each maintain an 8-bit encryption sequence counter. The encryption sequence counter shall be incremented modulo 256 for each new encryption. The counter value, hereafter called ES_COUNT, shall be used to form the SYNC parameter of the Enhanced Cellular Message Encryption Algorithm as described below.
- As part of each encryption, an additional octet of value ES_COUNT shall be inserted immediately following the encrypted part of the message. This additional octet shall not be encrypted. The additional octet shall be removed from the message after decryption.

2.3.12.2.1 Encrypted Messages on the f-dsch

When encryption is on ($ENCRYPT\_MODE_S$ equal to binary ‘01’ or ‘10’), the encryptable fields of the following messages sent on f-dsch, as listed below, shall be encrypted. All other messages sent on f-dsch shall be unencrypted.

1. Alert With Information Message (see 3.7.3.3.2.3) and Extended Alert With Information Message (see 3.7.3.3.2.42) are encrypted.

   The type-specific fields of all information records (see 3.7.5) shall be encrypted. For each information record, the type-specific fields shall be treated by the encryption procedure as a new single message. If the type-specific fields of an information record consist of a single octet (RECORD_LEN field equal to 1), an additional octet of value ‘00000000’ shall be inserted following the information record and shall be encrypted as if part of the record. (If the RECORD_LEN field is 0, the information record contains no type-specific fields, and the record contains no encrypted data.)

   No other fields in the *Alert With Information Message* and *Extended Alert With Information Message* are encrypted.

   If the Enhanced Cellular Message Encryption Algorithm is used ($ENCRYPT\_MODE_S$ equal to binary ‘10’), the following requirements apply for each information record:

   - The DATA_TYPE parameter shall be set to ‘0’.
   - The SYNC parameter shall be set as follows:
     - SYNC[0] = ES_COUNT
     - SYNC[1] = RECORD_TYPE

2. Flash With Information Message (see 3.7.3.3.2.14) and Extended Flash With Information Message (see 3.7.3.3.2.43) are encrypted.

The type-specific fields of all information records (see 3.7.5) shall be encrypted. For each information record, the type-specific fields shall be treated by the encryption procedure as a new single message. If the type-specific fields of an information record consist of a single octet (RECORD_LEN field equal to 1), an additional octet of value '00000000' shall be inserted following the information record and shall be encrypted as if part of the record. (If the RECORD_LEN field is 0, the information record contains no type-specific fields, and the record contains no encrypted data.)

No other fields in the *Flash With Information Message* and *Extended Flash With Information Message* are encrypted.

If the Enhanced Cellular Message Encryption Algorithm is used ($ENCRYPT\_MODE_S$ equal to binary '10'), the following requirements apply for each information record:

- The DATA_TYPE parameter shall be set to '0'.
- The SYNC parameter shall be set as follows:
  - SYNC[0] = ES_COUNT
  - SYNC[1] = RECORD_TYPE

3. *Send Burst DTMF Message* (see 3.7.3.3.2.9) is encrypted.

The DIGITi fields of the *Send Burst DTMF Message* shall be encrypted. These fields are treated by the encryption procedure as a new single message, with the 4-bit digit codes packed into consecutive octets. If the NUM_DIGITS field contains an odd number, four bits of value '0000' shall follow the last digit and shall be included in the encrypted message. If NUM_DIGITS is less than 3, an additional eight bits of value '00000000' shall follow the DIGITi fields and shall be included in the encrypted part of the message.

If the Enhanced Cellular Message Encryption Algorithm is used ($ENCRYPT\_MODE_S$ equal to binary '10'), the following requirements apply:

- The DATA_TYPE parameter shall be set to '0'.
- The SYNC parameter shall be set as follows:
  - SYNC[0] = ES_COUNT
  - SYNC[1] = MSG_TYPE = '00001001'

4. *Continuous DTMF Tone Order* (see 3.7.3.3.2.1) is encrypted.

The 16 bits comprised of ADD_RECORD_LEN, the order-specific fields and the first five (5) bits of the RESERVED field shall be encrypted. These fields shall be treated by the encryption procedure as a new single message.

If the Enhanced Cellular Message Encryption Algorithm is used ($ENCRYPT\_MODE_S$ equal to binary '10'), the following requirements apply:

- The DATA_TYPE parameter shall be set to '0'.
- The SYNC parameter shall be set as follows:
  - SYNC[0] = ES_COUNT

- SYNC[1] = MSG_TYPE = ‘00000001’

5. *Data Burst Message* (see 3.7.3.3.2.4) is encrypted.

   If BURST_TYPE is equal to ‘111110’ or ‘111111’, all CHARi fields after the first two shall be encrypted; otherwise, all CHARi fields shall be encrypted.

   If the CHARi field consists of a single octet (NUM_FIELDS field equal to 1), an additional octet of value ‘00000000’ shall be inserted following the information record and shall be encrypted as if part of the record. (If the NUM_FIELDS field is 0, the information record contains no type-specific fields, and the record contains no encrypted data).

   If the Cellular Message Encryption Algorithm is used ($ENCRYPT\_MODE_S$ equal to binary ‘01’), the following requirements apply:

   - If BURST_TYPE is equal to ‘000011’ (SMS) or ‘000100’ (OTASP), the message shall be encrypted.
   - For all other values of BURST_TYPE, the message shall be encrypted only if encryption is required by the service option standard governing use of the *Data Burst Message;* otherwise, the message shall not be encrypted.

   If the Enhanced Cellular Message Encryption Algorithm is used ($ENCRYPT\_MODE_S$ equal to binary ‘10’), the following requirements apply:

   - If BURST_TYPE is equal to ‘000100’ (OTASP), the DATA_TYPE parameter shall be set to ‘0’. Otherwise, the DATA_TYPE parameter shall be set to ‘1’.
   - The SYNC parameter shall be set as follows:
     - SYNC[0] = ES_COUNT
     - SYNC[1] = MSG_TYPE = ‘00000100’

6. Power Up Function Completion Message (see 3.7.3.3.2.30) is encrypted.

   If the LOC_IND field is set to ‘1’, the fields RESERVED (3 bits), MS_LAT (22 bits), MS_LONG (23 bits), and MS_LOC_TSTAMP (24 bits) are encrypted. These fields shall be treated by the encryption procedure as a new single message.

   Otherwise, if the LOC_IND field is set to ‘0’, no fields in this message are encrypted.

   If the Enhanced Cellular Message Encryption Algorithm is used ($ENCRYPT\_MODE_s$ equal to binary ‘10’), the following requirements apply:

   - The DATA_TYPE parameter shall be set to ‘1’.
   - The SYNC parameter shall be set as follows:
     - SYNC[0] = ES_COUNT
     - SYNC[1] = MSG_TYPE = ‘00011110’

2.3.12.2.2 Encrypted Messages on the r-dsch

When encryption is on ($ENCRYPT\_MODE_S$ equal to binary ‘01’ or ‘10’) the encryptable fields of the following r-dsch Layer 3 messages, as listed below, shall be encrypted. All

other r-dsch messages shall be unencrypted.

1. Origination Continuation Message (see 2.7.2.3.2.9) and Enhanced Origination Message are encrypted.

The CHARi fields of the *Origination Continuation Message* and *Enhanced Origination Message* shall be encrypted. These fields shall be treated by the encryption procedure as a new single message, with the character codes packed into consecutive octets. If DIGIT_MODE is '0' and the NUM_FIELDS field contains an odd number, four bits of value '0000' shall follow the last digit and shall be included in the encrypted part of the message. In addition, if $ENCRYPT\_MODE_S$ is equal to '01', the following requirement applies

- If DIGIT_MODE is '0' and NUM_FIELDS is less than 3, or if DIGIT_MODE is '1' and NUM_FIELDS is less than 2, an additional eight bits of value '00000000' shall follow the CHARi fields and shall be included in the encrypted part of the message.

If the Enhanced Cellular Message Encryption Algorithm is used ($ENCRYPT\_MODE_S$ equal to binary '10'), the following requirements apply:

- The DATA_TYPE parameter shall be set to '0'.
- The SYNC parameter shall be set as follows:
  - SYNC[0] = ES_COUNT
  - SYNC[1] = MSG_TYPE = '00001001' for *Origination Continuation Message*
  - SYNC[1] = MSG_TYPE = '00011010' for *Enhanced Origination Message*

The type-specific fields of all information records (see 2.7.4) in the *Origination Continuation Message* and *Enhanced Origination Message* shall be encrypted. For each information record, the type-specific fields shall be treated by the encryption procedure as a new single message. If the type-specific fields of an information record consist of a single octet (RECORD_LEN field equal to 1), an additional octet of value '00000000' shall be inserted following the information record and shall be encrypted as if part of the record. (If the RECORD_LEN field is 0, the information record contains no type-specific fields, and the record contains no encrypted data.)

If the Enhanced Cellular Message Encryption Algorithm is used ($ENCRYPT\_MODE_S$ equal to binary '10'), the following requirements apply for each information record:

- The DATA_TYPE parameter shall be set to '0'.
- The SYNC parameter shall be set as follows:
  - SYNC[0] = ES_COUNT
  - SYNC[1] = RECORD_TYPE

2. Flash With Information Message (see 2.7.2.3.2.3) and Extended Flash With Information Message (see 2.7.2.3.2.32) are encrypted.

The type-specific fields of all information records (see 2.7.4) shall be encrypted. For each information record, the type-specific fields shall be treated by the encryption

procedure as a new single message. If the type-specific fields of an information record consist of a single octet (RECORD_LEN field equal to 1), an additional octet of value '00000000' shall be inserted following the information record and shall be encrypted as if part of the record. (If the RECORD_LEN field is 0, the information record contains no type-specific fields, and the record contains no encrypted data.)

No other fields in the *Flash With Information Message* and *Extended Flash With Information Message* are encrypted.

If the Enhanced Cellular Message Encryption Algorithm is used ($ENCRYPT\_MODE_S$ equal to binary '10'), the following requirements apply for each information record:

- The DATA_TYPE parameter shall be set to '0'.
- The SYNC parameter shall be set as follows:
  - SYNC[0] = ES_COUNT
  - SYNC[1] = RECORD_TYPE

3. *Send Burst DTMF Message* (see 2.7.2.3.2.7) is encrypted.

The DIGITi fields of the *Send Burst DTMF Message* shall be encrypted. These fields shall be treated by the encryption procedure as a new single message, with the 4-bit digit codes packed into consecutive octets. If the NUM_DIGITS field contains an odd number, four bits of value '0000' shall follow the last digit and shall be included in the encrypted message. If NUM_DIGITS is less than 3, an additional eight bits of value '00000000' shall follow the DIGITi fields and shall be included in the encrypted part of the message.

If the Enhanced Cellular Message Encryption Algorithm is used ($ENCRYPT\_MODE_S$ equal to binary '10'), the following requirements apply:

- The DATA_TYPE parameter shall be set to '0'.
- The SYNC parameter shall be set as follows:
  - SYNC[0] = ES_COUNT
  - SYNC[1] = MSG_TYPE = '00000111'

4. *Continuous DTMF Tone Order* (see 2.7.2.3.2.1) is encrypted.

The 16 bits comprised of ADD_RECORD_LEN, the order-specific fields and the first five (5) bits of the RESERVED field shall be encrypted. These fields shall be treated by the encryption procedure as a new single message.

If the Enhanced Cellular Message Encryption Algorithm is used ($ENCRYPT\_MODE_S$ equal to binary '10'), the following requirements apply:

- The DATA_TYPE parameter shall be set to '0'.
- The SYNC parameter shall be set as follows:
  - SYNC[0] = ES_COUNT
  - SYNC[1] = MSG_TYPE = '00000001'

5. *Data Burst Message* (see 2.7.2.3.2.4) is encrypted.

   If BURST_TYPE is equal to '111110' or '111111', all CHARi fields after the first two shall be encrypted; otherwise, all CHARi fields shall be encrypted.

   If the CHARi field consists of a single octet (NUM_FIELDS field equal to 1), an additional octet of value '00000000' shall be inserted following the information record and shall be encrypted as if part of the record. (If the NUM_FIELDS field is 0, the information record contains no type-specific fields, and the record contains no encrypted data).

   If the Cellular Message Encryption Algorithm is used ($ENCRYPT\_MODE_S$ equal to binary '01'), the following requirements apply:

   - If BURST_TYPE is equal to '000011' (SMS) or '000100' (OTASP), the message shall be encrypted.
   - For all other values of BURST_TYPE, the message shall be encrypted only if encryption is required by the service option standard governing use of the *Data Burst Message;* otherwise, the message shall not be encrypted.

   If the Enhanced Cellular Message Encryption Algorithm is used ($ENCRYPT\_MODE_S$ equal to binary '10'), the following requirements apply:

   - If BURST_TYPE is equal to '000100' (OTASP), the DATA_TYPE parameter shall be set to '0'. Otherwise, the DATA_TYPE parameter shall be set to '1'.
   - The SYNC parameter shall be set as follows:
     - SYNC[0] = ES_COUNT
     - SYNC[1] = MSG_TYPE = '00000100'

2.3.12.3 Voice Privacy

Also see [2].

Voice privacy is provided in the CDMA system by means of the private long code mask used for PN spreading.

Voice privacy is provided on the Traffic Channels only. All calls are initiated using the public long code mask for PN spreading. The mobile station user may request voice privacy during call set-up using the *Origination Message* or *Page Response Message,* and during Traffic Channel operation using the *Long Code Transition Request Order.*

The transition to private long code mask shall not be performed if authentication is not performed ($AUTH_S$ is set to '00' or mobile station unable to perform authentication).

To initiate a transition to the private or public long code mask, either the base station or the mobile station sends a *Long Code Transition Request Order* on the f-dsch or r-dsch. The mobile station actions in response to receipt of this order are specified in 2.6.4, and the base station actions in response to receipt of this order are specified in 3.6.4.

The base station can also cause a transition to the private or public long code mask by sending the *Extended Handoff Direction Message*, the *General Handoff Direction Message*, or the *Universal Handoff Direction Message* with the PRIVATE_LCM bit set appropriately.

2.3.12.4 Extended Encryption for Signaling Message and User Information

Extended encryption is an encryption framework used for encrypting/decrypting both signaling messages and user information on f/r-dsch, f/r-csch, or f/r-dtch. Signaling message and user information encryption algorithms can be negotiated independently. Signaling message and user information encryption can be turned on or off independently.

Signaling messages or user information shall not be encrypted if authentication is not performed (i.e., when $MSG\_INTEGRITY\_SUP_S$ is equal to '0' and $AUTH_S$ is set to '00' (see 2.3.12.1)) or authentication has not been performed (i.e., when $MSG\_INTEGRITY\_SUP_S$ is equal to '1' and the INT_KEY[KEY_ID] is equal to NULL (see 2.3.12.5)).

2.3.12.4.1 Extended Encryption for Signaling Messages

Signaling messages with zero length shall be sent un-encrypted, in which case Layer 3 shall indicate to LAC layer that the messages are sent un-encrypted.

All mini messages shall be sent un-encrypted.

When sending a Registration Accepted Order, Security Mode Command Message, or Base Station Reject Order, the base station should use assured mode.

2.3.12.4.1.1 Extended Encryption for Signaling on f/r-csch

To turn f/r-csch signaling encryption on or off, the base station sends a *Registration Accepted Order* or *Security Mode Command Message* on f-csch, with the C_SIG_ENCRYPT_MODE field set to one of the values specified in Table 3.7.4.5-1. The value of $C\_SIG\_ENCRYPT\_MODE_r$ is then stored in $C\_SIG\_ENCRYPT\_MODE_S$.

If $C\_SIG\_ENCRYPT\_MODE_S$ is not equal to '000' and ENC_KEY[KEY_ID] is not equal to NULL, all f/r-csch signaling messages shall be encrypted based on the value of $C\_SIG\_ENCRYPT\_MODE_S$ using the procedures specified in 2.3.12.4.1.3; except for the exceptions listed below in the rest of this section.

On the f-csch, *General Page Message*, *Universal Page Message*, *Registration Request Order*, *Authentication Challenge Message*, *Registration Accepted Order*, *Base Station Reject Order*, and *Authentication Request Message* shall be sent un-encrypted. *Channel Assignment Message*, *Extended Channel Assignment Message*, and *Security Mode Command Message* may be sent un-encrypted. All overhead messages and all signaling messages with a broadcast address type shall be sent un-encrypted.

On the r-csch, *Registration Message*, *Page Response Message*, *Reconnect Message* (if sent in response to a *General Page Message* or a *Universal Page Message*), *Authentication Challenge Response Message*, *Security Mode Request Message*, *Authentication Response Message*, *Mobile Station Reject Order* (ORDQ = '00010110', '00011000', '00011001' or '00011010') and *Authentication Resynchronization Message* shall be sent un-encrypted.

When sending an *Origination Message*, if all of the following conditions are true, the mobile station shall not include the dialed digits in the *Origination Message*, and the mobile station shall include the dialed digits in the *Origination Continuation Message*:

- The base station supports extended encryption;
- $C\_SIG\_ENCRYPT\_MODE_S$ is equal to '000' or ENC_KEY[KEY_ID] is equal to NULL;
- C_SIG_ENCRYPT_REQ is set to '1' or D_SIG_ENCRYPT_REQ is set to '1' in the *Origination Message*;
- The mobile station does not recognize that this is an emergency call.

2.3.12.4.1.2 Extended Encryption for Signaling on f/r-dsch

The initial mode of extended encryption for f/r-dsch signaling messages is established by sending a *Channel Assignment Message* or *Extended Channel Assignment Message* with the ENCRYPT_MODE field set to '11'[17] and the D_SIG_ENCRYPT_MODE field set to one of the values specified in Table 3.7.4.5-1. The value of $D\_SIG\_ENCRYPT\_MODE_r$ is then stored in $D\_SIG\_ENCRYPT\_MODE_S$.

To turn f/r-dsch signaling encryption on or off after channel assignment, the base station sends a *General Handoff Direction Message* or *Universal Handoff Direction Message* with the ENCRYPT_MODE field and the D_SIG_ENCRYPT_MODE field set accordingly. Alternatively, the base station may send a *Security Mode Command Message* on f-dsch with the D_SIG_ENCRYPT_MODE field set accordingly.

If $D\_SIG\_ENCRYPT\_MODE_S$ is not equal to '000' and ENC_KEY[KEY_ID] is not equal to NULL, all f/r-dsch signaling messages shall be encrypted based on the value of $D\_SIG\_ENCRYPT\_MODE_S$ using the procedures specified in 2.3.12.4.1.3, except for the exceptions listed below in the rest of this section.

On the f-dsch, the *Security Mode Command Message* may be sent un-encrypted. The *Base Station Reject Order, Authentication Challenge Message* and *Authentication Request Message* shall be sent un-encrypted.

On the r-dsch, the *Security Mode Request Message, Authentication Challenge Response Message, Authentication Response Message, Mobile Station Reject Order* (ORDQ = '00010110', '00011000', '00011001' or '00011010') and *Authentication Resynchronization Message* shall be sent un-encrypted.

2.3.12.4.1.3 Signaling Encryption/Decryption Procedures

In order to perform signaling encryption, message integrity, or both, on f/r-csch or f/r-dsch, both the mobile station and the base station shall each maintain the following 32-bit counters:

[17] If ENCRYPT_MODE is set to a value other than '11', see section 2.3.12.2.1.

- TX_EXT_SSEQ[*i*][*j*] (the 32-bit crypto-sync for encryption and message integrity. *i* = 0 and 1, *j* = '00' to '11')
- RX_EXT_SEQ[*i*][*j*] (the 32-bit crypto-sync for decryption and message integrity. *i* = 0 and 1, *j* = '00' to '11')

The above counters in the base station and the mobile station shall only be initialized by a *Registration Accepted Order*, *Channel Assignment Message*, *Extended Channel Assignment Message*, or *Security Mode Command Message* in response to a *Registration Message*, *Origination Message*, *Page Response Message*, or *Security Mode Request Message* that carries a NEW_SSEQ_H field with a valid NEW_SSEQ_H_SIG field.[18] The response to a *Registration Message* is a *Registration Accepted Order*. The response to an *Origination Message* or *Page Response Message* is a *Channel Assignment Message* or *Extended Channel Assignment Message*. The response to a *Security Mode Request Message* is a *Security Mode Command Message*.

Upon initialization of the crypto-sync counters, the following initialization shall be performed at the mobile station: the 24 most significant bits of TX_EXT_SSEQ[*i*][KEY_ID] and RX_EXT_SSEQ[*i*][KEY_ID] shall be initialized by the value of the NEW_SSEQ_H field included in the message for *i* = 0 and 1.

The sender shall perform the following procedures for each Layer 3 PDU (including all Layer 3 PDU retransmitted by Layer 3) that is to be encrypted:

1. Append between 0 and 7 inclusive padding bits (set to any random combination of '0's and '1's) to the Layer 3 PDU such that the padded Layer 3 PDU in bits is an integer multiple of eight (the padding bits become part of the L3 PDU).
2. Compute an 8-bit Layer 3 PDU CRC as specified in 2.3.12.1.4 over the un-encrypted Layer 3 PDU (including the padding bits, if any).
3. Append the 8-bit CRC to the end of the Layer 3 PDU.
4. If the PDU is to be transmitted on f/r-csch, let SDU_ENCRYPT_MODE equal $C\_SIG\_ENCRYPT\_MODE_S$. If the PDU is to be transmitted on f/r-dsch, let SDU_ENCRYPT_MODE equal $D\_SIG\_ENCRYPT\_MODE_S$. If the Layer 3 PDU uses unassured mode, let *i* = 0; otherwise, let *i* = 1.
5. Let EXT_SSEQ equal TX_EXT_SSEQ[*i*][KEY_ID]. Encrypt the concatenated Layer 3 PDU and the 8-bit CRC by using EXT_SSEQ and the encryption algorithm specified by SDU_ENCRYPT_MODE, in accordance with 2.3.12.4.3.
6. The sender shall pass the encrypted concatenated Layer 3 PDU, the 8-bit Layer 3 CRC, the 32-bit EXT_SSEQ, SDU_ENCRYPT_MODE, and an indication whether the Layer 3 PDU shall be integrity-protected to the LAC layer.

---

[18] The mobile station should select a different value of NEW_SSEQ_H every time NEW_SSEQ_H is included in a message. This is to prevent the re-use of the same 24 most significant bits of the 32-bit crypto-sync.

7. Set TX_EXT_SSEQ[*i*][KEY_ID] to (TX_EXT_SSEQ[*i*][KEY_ID] + 1) mod 2^{32}.

The receiver shall perform the following procedures upon reception of an encrypted signaling message with an 8-bit SDU_SSEQ field or a 32-bit EXT_SSEQ passed by the LAC Layer (e.g., if SDU_ENCRYPT_MODE indicated by LAC Layer is not equal to '000'):

1. If the Layer 3 PDU uses unassured mode, let i = 0 and N = 8; otherwise, let i = 1 and N = 4. Let V be the 8 least significant bits of RX_EXT_SSEQ[*i*][SDU_KEY_ID]. Perform the duplicate detection procedures in accordance with 2.3.12.4.1.5 using N and V, before proceeding further.
2. If SDU_SSEQ is supplied by the LAC Layer, the mobile station shall construct EXT_SSEQ as follows:

   If (SDU_SSEQ - V) mod 256 < 128:

   EXT_SSEQ = (RX_EXT_SSEQ[*i*][SDU_KEY_ID] + (SDU_SSEQ - V) mod 256) mod 2^{32}

   Else:

   EXT_SSEQ = (RX_EXT_SSEQ[*i*][SDU_KEY_ID] - (V - SDU_SSEQ) mod 256) mod 2^{32}
3. Remove the LAC Layer padding, at the end of the Layer 3 PDU, if any, such that the Layer 3 PDU is octet aligned.
4. Decrypt the concatenated Layer 3 PDU and the 8-bit Layer 3 CRC using EXT_SSEQ and the encryption algorithm specified by SDU_ENCRYPT_MODE, in accordance with 2.3.12.4.3.
5. Compute an 8-bit CRC as specified in 2.3.12.4.1.4 over the un-encrypted Layer 3 PDU (excluding the received 8-bit CRC).
6. Compare the value of the computed CRC with the decrypted 8-bit CRC. If the two CRCs are equal, the decryption is defined to be successful; otherwise the decryption is defined to be unsuccessful.
7. If the decryption was unsuccessful, the message shall be discarded; otherwise, if SDU_SSEQ is supplied by the LAC Layer and ((SDU_SSEQ - V) mod 256) < 128, the receiver shall set RX_EXT_SEQ[*i*] to EXT_SSEQ constructed in step 2 above.
8. If the base station can not decrypt an *Origination Message* or the LAC Layer indicates that the MACI is not valid in an *Origination Message*, the base station should send a *Base Station Reject Order* (ORDQ = '00000000'). If the base station can not decrypt any other message or the LAC Layer indicates that the MACI is not valid for other message, the base station should send a *Base Station Reject Order* (ORDQ = '00000001').

2.3.12.4.1.4 Computation of the 8-bit Layer 3 PDU CRC Field

The generator polynomials for the 8-bit Layer 3 PDU CRC field shall be as follows:

$$g(x) = x^8 + x^7 + x^4 + x^3 + x + 1$$

The Layer 3 PDU CRC field shall be computed according to the following procedure using the logic shown in Figures 2.3.12.4.5-1:

- Initially, all shift register elements shall be set to logical one and the switches shall be set in the up position.
- The register shall be clocked a number of times equal to the number bits in the Layer 3 PDU with those bits as input.
- The switches shall be set in the down position so that the output is a modulo-2 addition with a ‘0’ and the successive shift register inputs are ‘0’.
- The register shall be clocked an additional 8 number of times.
- These additional bits shall be the Layer 3 PDU CRC field indicator bits.
- The bits shall be transmitted in the order calculated.

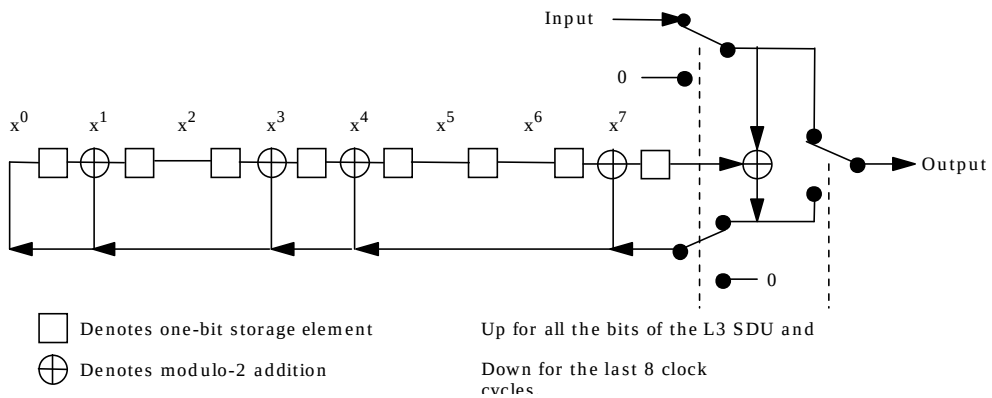

Figure 2.3.12.4.1.4-1. 8-Bit Layer 3 SDU CRC Field Calculation

2.3.12.4.1.5 Duplicate Detection of Security Sequence Number

This section describes the duplicate detection of encrypted signaling messages (see the decryption procedures at the receiver described in 2.3.12.4.1.3).

Given the value of the latest sequence number received, *V*, and the window size, *N* (see the decryption procedures at the receiver described in 2.3.12.4.1.3), the 8-bit encryption sequence number space at the receiver can be divided into the following three segments as shown in Figure 2.3.12.4.1.5-1:

- Segment #1 - sequence numbers from ((V - N + 1) mod 256) to V inclusive (the anti-replay window)
- Segment #2 - sequence numbers from ((V + 1) mod 256) to ((V + 127) mod 256) inclusive (future sequence numbers)
- Segment #3 - sequence numbers from ((V + 128) mod 256) to ((V - N) mod 256) inclusive (past sequence numbers)

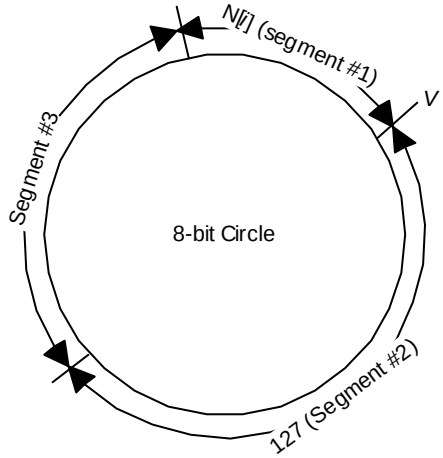

Figure 2.3.12.4.1.5-1 An 8-bit Encryption Sequence Number Space Divided into 3 Segments

If the received sequence number, SDU_SSEQ, belongs to segment #1, the receiver shall check whether SDU_SSEQ has already been received.[19] If SDU_SSEQ has been received already, the receiver shall discard the message and shall not perform the remaining steps of the decryption procedures described in 2.3.12.4.1.3; otherwise, the receiver shall continue the decryption procedures described in 2.3.12.4.1.3.

If the received sequence number, SDU_SSEQ, belongs to segment #2, the receiver shall continue the decryption procedures described in 2.3.12.4.1.3.

If the received sequence number, SDU_SSEQ, belongs to segment #3, the receiver shall discard the message and shall not perform the remaining steps of the decryption procedures described in 2.3.12.4.1.3.

2.3.12.4.2 Extended Encryption for User Information

Extended encryption can be turned on or off independently for each individual service on f/r-dtch.

---

[19] The actual means of checking is left to implementation. One simple implementation is for the receiver to maintain an N-bit bitmap, w, to represent the sequence numbers in segment #1. The order of w is most significant bit first (i.e., $w[N-1]$, $w[N-2]$,..., $w[1]$, $w[0]$). Let $w[0]$ represent V, $w[1]$ represent $((V - 1) \bmod 256)$, etc. $w[i]$ = '1' means sequence number i has already been received. When a message with sequence number i has been decrypted successfully, $w[i]$ is set to '1'. Whenever V moves from V_1 to V_2, left-shift w $((V_2 - V_1) \bmod 256)$ times. Each time w is left-shifted, stuff a '0' at the eight end of w. After all the shifting, set $w(0)$ to '1'.

The initial encryption mode of user information of a service is established by sending a *Security Mode Command Message* on f-csch or by setting the UI_ENCRYPT_MODE field in the Service Configuration information record, with the UI_ENCRYPT_MODE field set to one of the values specified in 3.7.5.7-3. The value of the UI_ENCRYPT_MODE field is then stored in $SO\_CON\_REC_S[j]$.UI_ENCRYPT_MODE, where $SO\_CON\_REC_S[j]$ is the service option connection record (see 2.6.4.1.12) corresponding to the service.

To turn user information encryption for a service on or off after channel assignment, the base station sends a *Security Mode Command Message* on f-dsch with the UI_ENCRYPT_MODE field set accordingly. Explicit action time should be used when sending the *Security Mode Command Message*.

User information shall be encrypted based on the value of $SO\_CON\_REC_S[j]$.UI_ENCRYPT_MODE, where $SO\_CON\_REC_S[j]$ is the service option connection record (see 2.6.4.1.12) corresponding to the service.

2.3.12.4.2.1 User Information Encryption/Decryption Procedures

If $P\_REV\_IN\_USE_S$ is less than nine and extended encryption for user information is turned on for a service, the sender shall encrypt each data block (see [3]) from that service, in accordance with 2.3.12.4.3, before passing the data blocks to MAC Layer. On the receiver side, the receiver shall decrypt each data block for that service from MAC Layer, in accordance with 2.3.12.4.3, before passing them to that service.

If $P\_REV\_IN\_USE_S$ is greater than or equal to nine and extended encryption for user information is turned on for a service, the sender shall encrypt the user data in the service layer before passing it to the MAC Layer. On the receiver side, the receiver shall pass each data block from MAC Layer to that service. Details of encryption are specified in the corresponding service option specification (see [30]).

If $P\_REV\_IN\_USE_S$ is greater than or equal to nine and extended encryption for user information is turned on for a voice service option[20], the sender shall encrypt each data block from the voice service, in accordance with 2.3.12.4.3, before passing the data blocks to MAC Layer. On the receiver side, the receiver shall decrypt each data block for the voice service from MAC Layer, in accordance with 2.3.12.4.3, before passing them to that service.

2.3.12.4.3 Interface to the Encryption Algorithms

Figure 2.3.12.4.3-1 shows the structure for encrypting/decrypting both signaling messages and user information. Various encryption algorithms can be used with this structure. The encryption algorithm takes all or part of the following parameters as inputs, as illustrated in Figure 2.3.12.4.3-1. The actual inputs to the algorithm are specified in the rest of this section.

---

[20] Voice service option refers to SO 60, SO 61 or any service option in Service Option Group 0 in [30].

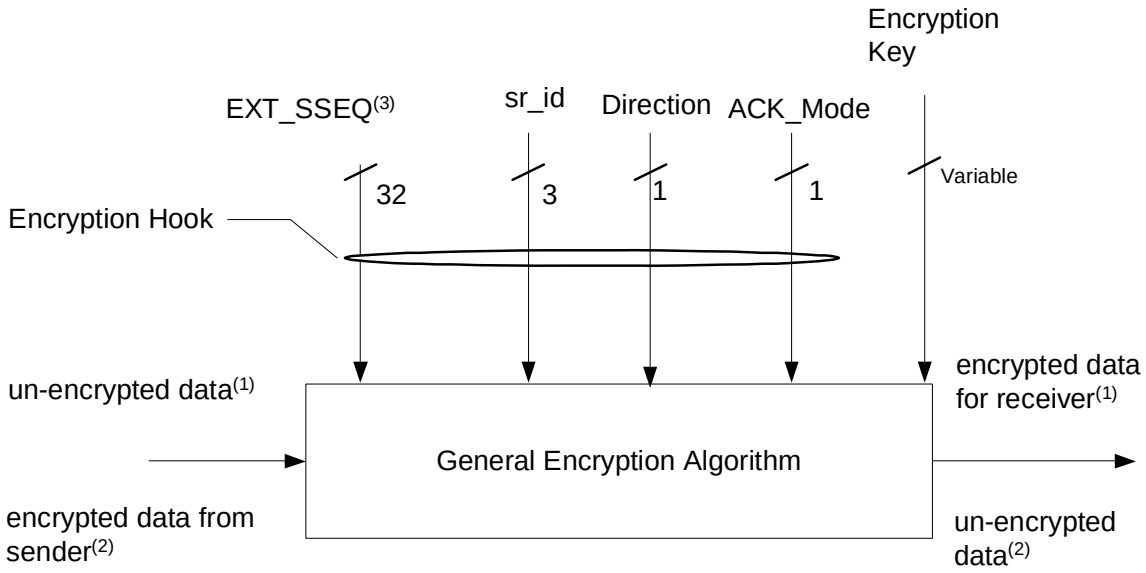

Notes:
(1) For encryption only
(2) For decryption only
(3) The following value shall be used instead of EXT_SSEQ for user information: $\lfloor sys\_time/20 \rfloor \bmod 2^{32}$, where sys_time is the system time, in units of ms, corresponding to the start of the frame that carries the user information bits.

Figure 2.3.12.4.3-1. Encryption Input Parameters

The inputs to the encryption algorithm are described as follows:

- EXT_SSEQ - A 32-bit Security Encryption Sequence Number for encryption/decryption.
- sr_id - Service Reference Identifier (see [3]), which identifies the associated service option instance.
- Direction - The direction of the data being encrypted/decrypted. This shall be set to ‘0’ if the data is transmitted on or received on a forward link. Otherwise, it shall be set to ‘1’.
- Encryption Key – Session Key for Encryption. This shall be a result of successful Session Key Agreement between the base station and the mobile station. The Encryption Key shall be stored by the mobile station in ENC_KEY[KEY_ID].
- Channel_id – Channel identifier, which identifies the physical channel that carries the data to be encrypted or decrypted. This is applicable only to user information encryption on f/r-dtch. Channel_id shall be set to, ‘000’ for Fundamental Channel, ‘001’ for Dedicated Control Channel, ‘010’ for Supplemental Code Channel, ‘011’ for Supplemental Channel 0, and ‘101’ for Supplemental Channel 1.
- ACK_Mode – The delivery mode (unassured or assured) of the signaling message.

This shall be set to ‘0’ if the message is delivered using unassured mode; otherwise, this shall be set to ‘1’.

If the Enhanced Cellular Message Encryption Algorithm is used for encrypting/decrypting signaling messages, the input parameters of the Enhanced Cellular Message Encryption Algorithm (see [23]) shall be set as follows:

- The DATA_TYPE parameter shall be set to ‘0’.
- The SYNC parameter shall be set as follows:
  - SYNC[0] = EXT_SSEQ [7:0][21].
  - SYNC[1] = (ACK_Mode |Direction | EXT_SSEQ [13:8]), where “|” denotes concatenation and EXT_SSEQ_S [13:8] is bits 8 through 13 of EXT_SSEQ (with the LSB being bit 0).
- The CMEAKEY[0-7] parameter shall be set to the first 64 bits of ENC_KEY[KEY_ID].

If the Rijndael Encryption Algorithm is used for encrypting/decrypting signaling messages, the input parameters of ESP_AES (see [44]) shall be set as follows:

- The encryption key parameter shall be set to ENC_KEY[KEY_ID].
- The FRESH parameter shall be set to (ACK_Mode | sr_id [2:0] | Direction | EXT_SSEQ [31:0] | ‘000’).
- The FRESHSIZE parameter shall be set to 5.
- The BUF parameter shall be set to the pointer of the most significant bit of the buffer[22] that contains the data to be encrypted or decrypted.
- The BIT_OFFSET parameter shall be set to the offset between the bit position of the most significant bit of the data to be encrypted/decrypted and the bit position of the most significant bit of the buffer (e.g., if the bit position of the most significant bit of the data to be encrypted/decrypted and the bit position of the most significant bit of the buffer are equal, BIT_OFFSET = 0).
- The BIT_COUNT parameter shall be set to the number of bits of the data to be encrypted/decrypted.
- The full 128 bits of ENC_KEY[KEY_ID] shall be used.

If the Rijndael Encryption Algorithm is used for encrypting/decrypting user information, the input parameters of ESP_AES (see [44]) shall be set as follows:

- The encryption key parameter shall be set to ENC_KEY[KEY_ID].

---

[21] *Z* [*y*:*x*] denotes bit *x* to bit *y* of the binary value *Z* with bit 0 the least significant bit of *Z*.

[22] “Buffer” refers to the physical memory that stores the data to be encrypted or decrypted. The octets in the buffer are assumed to be most-significant first, and the first bit of the buffer is the most significant bit of the first octet.

- The FRESH parameter shall be set to (sr_id [2:0] | Direction | ($\lfloor$sys_time/20$\rfloor$ mod 2^{32}) [31:0]| Channel_id [2:0] | '0'), where sys_time is the system time, in units of ms, corresponding to the start of the physical layer frame that carries the data block(s).
- The FRESHSIZE parameter shall be set to 5.
- The BUF parameter shall be set to the pointer of the most significant bit of the buffer[23] that contains the data to be encrypted or decrypted.
- The BIT_OFFSET parameter shall be set to the offset between the bit position of the most significant bit of the data to be encrypted/decrypted and the bit position of the most significant bit of the buffer (e.g., if the bit position of the most significant bit of the data to be encrypted/decrypted and the bit position of the most significant bit of the buffer are equal, BIT_OFFSET = 0).
- The BIT_COUNT parameter shall be set to the number of bits of the data to be encrypted/decrypted.
- The full 128 bits of ENC_KEY[KEY_ID] shall be used.

2.3.12.4.4 Encryption Negotiation

The mobile station shall indicate to the base station the encryption algorithms supported by using SIG_ENCRYPT_SUP and UI_ENCRYPT_SUP in one of the following messages:

- *Registration Message*
- *Origination Message*
- *Page Response Message*
- *Security Mode Request Message*
- *Status Response Message* (in Encryption Capability information record)
- *Extended Status Response Message* (in Encryption Capability information record)

The base station may turn on or turn off the encryption of the voice, data services, or signaling encryption with a *Security Mode Command Message*, *Universal Handoff Direction Message*, or *General Handoff Direction Message* sent on f-dsch or *Security Mode Command Message* sent on f-csch. Similarly, the mobile station may propose to turn on or turn off the user information encryption or signaling encryption with a *Security Mode Request Message* sent on r-dsch or r-csch.

[23] "Buffer" refers to the implementation-dependent physical memory that stores the data to be encrypted or decrypted. The octets in the buffer are assumed to be most-significant first, and the first bit of the buffer is the most significant bit of the first octet.

2.3.12.4.5 Computation of NEW_SSEQ_H_SIG

The NEW_SSEQ_H_SIG field (included in the *Registration Message, Origination Message, Page Response Message, and Security Mode Request Message*) is a signature of the 24 most significant bits of the crypto-sync (NEW_SSEQ_H). The mobile station shall compute this 8-bit field as follows:

1. The mobile station shall construct the *message bits* as shown in Figure 2.3.12.4.5-1.

   For messages that are sent on the r-csch, X is set to $RAND_S$. For messages that are sent on the r-dsch, X is set to $(\lfloor sys\_time/20000 \rfloor) \bmod 2^{32}$, where sys_time is the system time in ms at which the message is assembled.

MSB		LSB
SSD_A (64 bits)	X (32 bits)	ENC_SEQ_H (24 bits)

Figure 2.3.12.4.5-1. Message Bits

2. The mobile station shall pad the *message bits* constructed in the previous step, as specified in [38], and compute the 160-bit *message digest* as specified in [38].
3. The mobile station shall store the 8 rightmost (least significant) bits of the *message digest* in NEW_SSEQ_H_SIG.

2.3.12.5 Authentication and Key Set-up Procedures when $P\_REV\_IN\_USE_S$ >= 10

If $P\_REV\_IN\_USE_S$ is equal to or greater than ten and $MSG\_INTEGRITY\_SUP_S$ is equal to '1', then message integrity is performed (see [4]). The mobile station performs authentication in accordance with the procedures in this section. Before any message integrity or extended encryption (see 2.3.12.4) can be performed, the mobile station and base station need to set up the same set of integrity key, encryption key, and security sequence number in a secured manner.

There are two types of keys that the base station could obtain from the network – the CMEA key or the (IK, CK) pair. Each requires a different method to be established. CMEA key is the key generated using CAVE during 2G authentication as described in 2.3.12.1. The (IK, CK) pair is a result of AKA (3G authentication. See [44]).

All base stations with P_REV greater than or equal to ten shall be able to execute 2G authentication or AKA. Whether the AKA procedures are actually performed on a mobile station depends on various factors such as whether the HLR/AC has enabled AKA, whether the ANSI-41 interfaces between the MSC/VLR and AC supports AKA, etc.

All mobile stations with MOB_P_REV greater than or equal to ten shall support 2G authentication, AKA, and message integrity.

In general, when an idle mobile station does not have any integrity key and encryption key to use, it starts the 2G authentication and key set-up procedures by registering via a *Registration Message*, *Origination Message*, or *Page Response Message*.

Details of Authentication and Key Set-Up Procedures are described in the rest of this section.

The mobile station requests (IK, CK) from the UIM. If (IK, CK) are available, the mobile station has already performed the 3G authentication and the (IK, CK) may still be valid, in which case, the mobile station needs to perform the (IK, CK) restoration procedures in 2.3.12.5.3 to restore the (IK, CK).

If (IK, CK) in the UIM are not available, the mobile station sets KEY_ID to NULL to indicate that the mobile station does not have any integrity key and encryption key and thus not authenticated. The mobile station then registers and sends an *ROP*. The *ROP* contains a new key id (NEW_KEY_ID) and a new security sequence number (NEW_SSEQ_H) associated with the AUTHR (see [4]) of the message. The mobile station also starts a Key Set-Up timer. [24]

Since the mobile station does not know beforehand whether the serving base station it roams to supports 2G authentication, 3G authentication, or both, the mobile station always starts with 2G authentication. When a mobile station sends an *ROP*, it always starts with performing the 2G authentication by including an AUTHR (see [4]) in the message. If an AKA is performed during a 2G authentication, the mobile station will abort the 2G authentication.

The types of authentication are distinguished according to what the network provides the base station with during the authentication process. If the base station receives a CMEA key, 2G authentication is performed (see 2.3.12.5.1). If the base station receives Authentication Vectors (AV's), 3G authentication is performed (see 2.3.12.5.2).

In the 2G authentication, the mobile station concatenates the CMEA key with a copy of itself to form a 128-bit key to be used as both the integrity key, CIK, and the encryption key, CCK. The CIK and CCK will be referred to as the (CIK, CCK) pair.

In the 3G authentication, the mobile station uses IK as the integrity key and CK as the encryption key – referred to as the (IK, CK) pair.

The key strength of CCK or CK may be reduced by the "Key Strength Reduction Algorithm" (see 2.3.12.5.4), which takes the key and converts it into another key of the same length but with the entropy reduced. For simplicity, all the procedures hereafter only mention CCK and CK.

---

[24] If the base station knows it is not going to get any keys from the network for whatever reason, the base station should indicate so in the *Registration Accepted Order*, so that the mobile station could stop waiting. However, if there is no current CIK "in use", the *Registration Accepted Order* could not be MAC'ed, in which case, it is up to the mobile station whether or not to trust the *Registration Accepted Order*.

Whenever the key set-up is complete, all the messages shall include a MACI with the following exceptions:

- On the f-csch, the *General Page Message*, *Universal Page Message*, *Registration Request Order*, *Authentication Request Message* and *Authentication Challenge Message* shall not include a MACI. The *Extended Channel Assignment Message* may not include a MACI. All overhead messages and all signaling messages with a broadcast address type shall not include a MACI.
- On the f-dsch, the *Authentication Challenge Message* shall not include a MACI.
- On the r-csch or r-dsch, the *Authentication Response Message*, *Authentication Resynchronization Message* and *Mobile Station Reject Order* (ORDQ = '00010110', '00011000', '00011001' or '00011010') shall not include a MACI.
- All mini messages shall not include a MACI.

When the mobile station sends a *Registration Message*, *Origination Message*, or *Page Response Message* when RESTORE_KEYS is equal to '1', Layer 3 shall deliver the message with a 24-bit number (selected by Layer 3) to LAC. The 24-bit number is used to perform the MAC-I computation and to initialize TX_EXT_SSEQ[*i*][*j*] and RX_EXT_SSEQ[*i*][*j*], where *i* = '0' or '1', *j* = '00' to '11'.

2.3.12.5.1 2G Authentication when $P\_REV\_IN\_USE_S$ >= 10

This section applies to a base station that performs 2G authentication with the mobile station.

If KEY_ID is equal to NULL and mobile station wants to set up encryption and integrity keys, it shall start Key Set-Up timer with expiration time of T75m seconds and execute the key set-up procedure described in this section by sending an *ROP*.

If an *ROP* does not include a MACI, it implies that the mobile station does not have an integrity key, in which case, the base station gets a CMEA key from the network and authenticates the mobile station's AUTHR (which is always included, see [4]). If the authentication is successful, when the CMEA key is available at the base station, the base station uses assured mode to send a *RES* that includes a Message Authentication Code generated using the pending CIK, and the pending NEW_SSEQ_H (proposed by the mobile station). Upon reception of the *RES*, the mobile station validates the MACI. If the validation is successful, the pending (CIK, CCK) and NEW_SSEQ_H can become "in use" in the mobile station. The mobile station stores the NEW_KEY_ID in KEY_ID, the CIK in INT_KEY[KEY_ID], and the CCK in ENC_KEY[KEY_ID].

The mobile station then stops the Key Set-Up timer and sends a *Security Mode Completion Order* using assured mode to the base station that includes a Message Authentication Code. At this point, if the base station successfully validates the *Security Mode Completion Order* that the mobile station sends, the pending (CIK, CCK) and NEW_SSEQ_H can become "in use" in the base station; otherwise, the base station resends the *RES* until it receives a valid *Security Mode Completion Order* from the mobile station. If the mobile station receives a *RES* with an invalid MACI, the mobile station shall enter the *System Determination Substate* with an encryption/message integrity failure indication.

Once (CIK, CCK) has been established, the mobile station can perform integrity protection and encryption.

If the Key Set-Up timer expires and the mobile station determines that it is not attempting to originate an emergency call, the mobile station may go to the *System Determination Substate* with an encryption/message integrity failure indication, which will trigger re-registrations or the mobile station may continue with normal Layer 3 Signaling procedures, not to retry key set-up, and not to perform message integrity in both directions[25]. If the mobile station retries key set-up but still cannot establish the keys after an implementation dependent number of retries, the mobile station may reject the serving base station.

If the *ROP* includes a MACI in addition to AUTHR, this implies the mobile station has an integrity key, in which case, the base station has two options. It can either continue using the current (CIK, CCK) or change to a new pair.

If the base station decides to change to a new pair of (CIK, CCK), the base station will perform the key set-up procedures described above.

If the base station decides not to change to any new keys, the base station sends to the mobile station an *RES* that includes a Message Authentication Code. Upon reception of the *RES*, the mobile station validates the MACI and if the MAC-I checks, the mobile station sends a *Security Mode Completion Order* that includes a Message Authentication Code using assured mode and removes the pending keys, the associated key id, and the associated NEW_SSEQ_H.

To minimize race conditions, on the base station side, the base station does not send any messages that are encrypted or include a Message Authentication Code, and are non-essential to the key set-up between the time it receives an *ROP* and the time it receives the *Security Mode Completion Order* of an *RES*, which is always sent using the assured mode. On the mobile station side, to the same purpose, the mobile station does not send any messages that are encrypted or include a Message Authentication Code, and are non-essential to the key set-up between the time it sends an *ROP* and the time it receives an *RES*. Also, the mobile station does not send another *ROP* between the time it sends an *ROP* and the time it receives a *RES*.

2.3.12.5.2 3G Authentication (AKA) when $P\_REV\_IN\_USE_S$ >= 10

This section applies to a base station that performs 3G authentication (AKA) with the mobile station. The AKA procedure and related algorithms take mobile station specific information, data received from base station and the mobile station's subscriber authentication key as inputs. The subscriber authentication key is 128-bits long. It is assigned to the mobile station and is stored in the mobile station's permanent security

[25] This is to allow the mobile station to operate and accept services from the base station without message integrity protection in case the keys cannot be established for whatever reason (e.g., shared secret root keys in the mobile station and base station do not match).

and identification memory. The subscriber authentication key is known only to the mobile station and to its associated Authentication Center (AC) (see [13]). Refer to Figures 2.3.12.5.2-1, 2.3.12.5.2-2, 2.3.12.5.2-3, and 2.3.12.5.2-4. In these figures, the input K is the mobile station's subscriber authentication key.

The purposes of AKA are to mutually authenticate the mobile station and the serving base station, and to establish a new set of (IK, CK) and UAK, if supported. Upon completion of AKA, CK and IK are stored in the mobile station while UAK, if supported, is stored in the UIM. Mentioning of (IK, CK) hereafter already implicitly implies that UAK is also included, if supported. When extended encryption is turned on, CK is used as the encryption key in the extended encryption described in 2.3.12.4. IK is used as the integrity key to provide message integrity check in the base station. UAK is used to convert the result of message integrity check, MAC-I, into UMAC.

AKA can be initiated by the base station at any time for any reason. For example, when (IK, CK) expires in the mobile station. Also, when the base station receives an *ROP*, the base station checks if the *ROP* contains a MACI or not. If there is no MACI, or the MACI does not check, or can not be checked, the base station may initiate AKA. Regardless of the reasons, if the base station initiates AKA, the following events occur.

The base station invokes the procedure by selecting the next unused AV from the ordered array of AV's stored in the VLR. If an AV is not available in the serving node, one (or more) AV's are requested from the subscriber's home system. The base station sends the mobile station an *Authentication Request Message* which contains the random challenge RANDA and the authentication token for network authentication, AUTN, associated with the selected AV.

Each AV contains the following information (see figure 2.3.12.5.2-1):

- Authentication Random Challenge Number (RANDA)
- Expected Result (XRES)
- Encryption Key (CK)
- Integrity Key (IK)
- UIM Authentication Key (UAK) (support of this field is optional)
- Authentication Token (AUTN), which consists of the Concealed Sequence Number (CON_SQN), the Authentication Management Function (AMF), and the Message Authentication Code (MAC-A).

Upon reception of the *Authentication Request Message*, the mobile station aborts any pending 2G key set-up, starts the Key Set-Up timer with expiration time of T75m seconds and the UIM computes the expected message authentication code (XMAC). If this is not equal to the MAC-A received in the AUTN, the mobile station shall enter the *System Determination Substate* with an encryption/message integrity failure indication; otherwise, the UIM verifies that the sequence number SQN (see [46]) received in the AUTN is in the correct range (a test of freshness).

If the UIM determines that the received SQN is not in the correct range (see [46]), the mobile station sends an *Authentication Resync Message* to the base station that includes

the concealed value of the sequence number stored in the UIM (CON_MS_SQN). If the SQN is in the correct range, the UIM computes the (IK, CK) pair and the RES and passes the (IK, CK) pair and RES to the mobile station. The mobile station then associates a pending key id NEW_KEY_ID and a pending NEW_SSEQ_H with the pending (IK, CK) pair and sends an *Authentication Response Message* containing RES to the base station. The *Authentication Response Message* shall contain a Message Authentication Code that is computed based on the pending NEW_SSEQ_H and the pending IK.

The mobile station also stores (RANDA, RES, IK, CK, key id, NEW_SSEQ_H) in case it receives, in the near future, the same retransmitted *Authentication Request Message* that requires the mobile station to resend the same *Authentication Response Message*. The UIM stores (IK, CK) until the next successful execution of AKA.

Upon reception of the *Authentication Response Message*, the base station compares RES with the expected response XRES from the selected AV. If XRES equals RES, then the authentication of the user has passed and the pending (IK, CK) and the pending NEW_SSEQ_H can become “in use” in the base station. The base station then confirms the AKA completion by sending an *RES* that includes a Message Authentication Code generated using the pending IK to confirm the use of the pending (IK, CK). Upon reception of this confirmation, the mobile station stops the Key Set-Up timer and the pending (IK, CK), NEW_SSEQ_H, and key id become “in use” for the mobile station. The mobile station stores the NEW_KEY_ID in KEY_ID, the IK in INT_KEY[KEY_ID], and the CK in ENC_KEY[KEY_ID].

Once (IK, CK) has been established, the mobile station may start integrity protection and encryption.

If the Key Set-Up timer expires and the mobile station determines that it is not attempting to originate an emergency call, the mobile station shall go to the *System Determination Substate* with an encryption/message integrity failure indication, which will trigger re-registrations. If the mobile station retries key set-up but still cannot establish the keys after an implementation dependent number of retries, the mobile station may reject the serving base station.

To ensure the base station has agreed to switch to the pending (IK, CK), the mobile station keeps sending the *Authentication Response Message* until it gets the *RES* that includes a Message Authentication Code generated using the pending IK (or until the Key Set-Up timer expires, whichever comes first). Also, if the ME receives the (RANDA, AUTN) that are the same as the last received, the ME does not pass the (RANDA, AUTN) to the UIM but responds with an *Authentication Response Message* including the corresponding RES.

To minimize race conditions, on the base station side, the base station does not send any messages that are encrypted or include a Message Authentication Code, and are non-essential to the key set-up between the time it sends the *Authentication Request Message* and the time it receives the *Authentication Response Message*. On the mobile station side, the mobile station does not send any messages that are encrypted or include a Message Authentication Code, and are non-essential to the key set-up between the time it receives the *Authentication Request Message* and the time it receives the *Security Mode Command Message* that includes a Message Authentication Code generated using the pending IK.

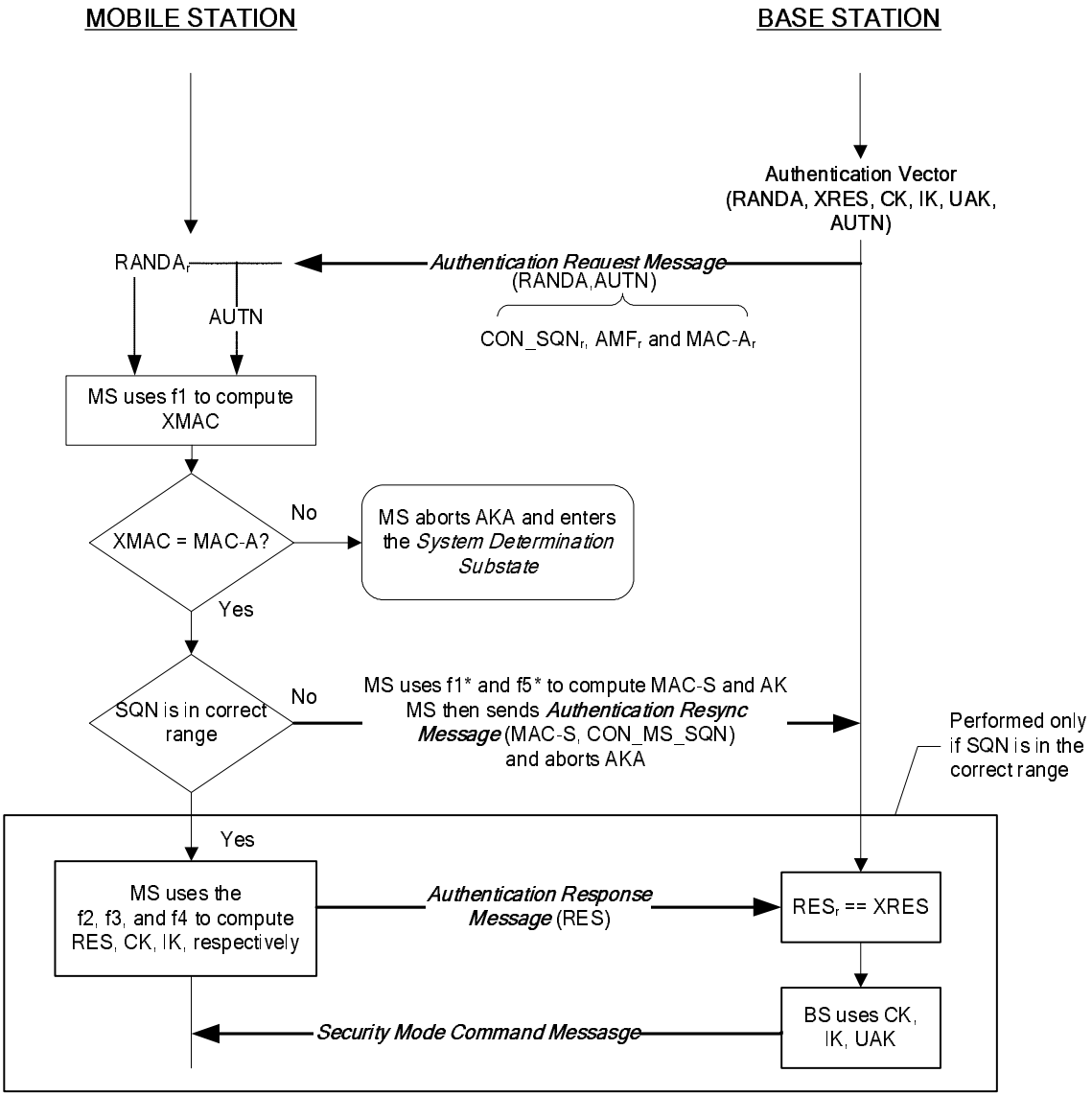

Figure 2.3.12.5.2-1. Authentication and Key Agreement Procedures Message Flow

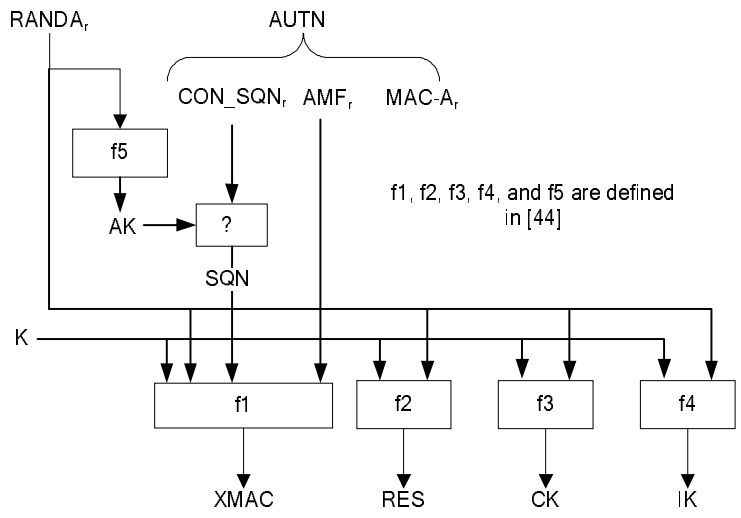

Figure 2.3.12.5.2-2. User Authentication Function used by the Mobile Station

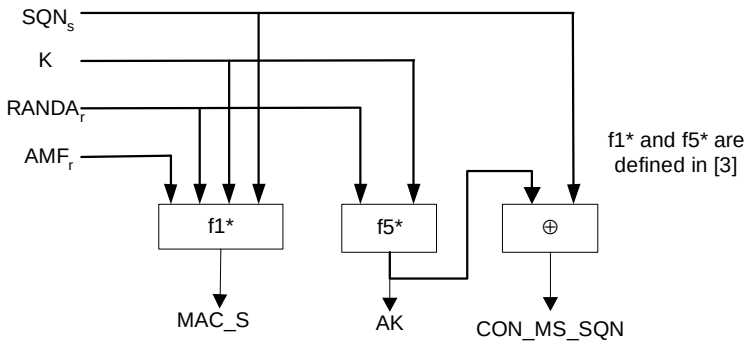

Figure 2.3.12.5.2-3. Function used by the Mobile Station for Calculation of CON_MS_SQN and MACS in case of Out-of-Synch SQN

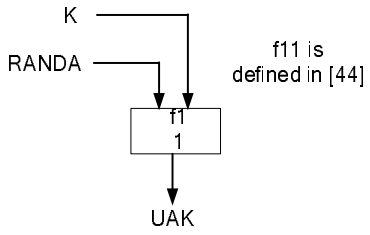

Figure 2.3.12.5.2-4. Function used for Calculation of UAK

2.3.12.5.3 Restoring (IK, CK) upon power on

Since (IK, CK) is stored in UIM even when the mobile station is powered off, it is possible for the mobile station, when the mobile station powers on again, to try to restore and use the stored (IK, CK) in order to avoid unnecessary AKA. However, the mobile station will need to re-establish the crypto-sync and key id, which are not stored when the mobile station is powered off.

If the base station no longer has the (IK, CK) available, the base station initiates an AKA and establishes a new (IK, CK) anyway, thus it will not need the following procedures.

The mobile station could try to restore the key id association with its (IK, CK) via an *ROP* and a subsequent response from the base station. The mobile station sends an *ROP* that includes a Message Authentication Code generated using the stored IK and a pending NEW_SSEQ_H. The mobile station includes the NEW_SSEQ_H in the LAC Layer in the *ROP* and sets the SDU_KEY_ID to a value selected by the mobile station to associate with this (IK, CK). When the base station receives the *ROP*, it validates the MACI using its own IK stored for this mobile station and with the pending NEW_SSEQ_H provided in the message. If the MACI is valid, the base station sends a *Security Mode Command Message* that includes a Message Authentication Code generated using the stored IK and NEW_SSEQ_H.

When the mobile station receives the *RES*, the mobile station validates the MACI. If the MACI checks, the mobile station then starts using the key id for the stored (IK, CK) and the (IK, CK) and NEW_SSEQ_H can become “in use” in the mobile station. The mobile station then sends a *Security Mode Completion Order* that includes a Message Authentication Code using assured mode.

Upon reception of the *Security Mode Completion Order*, base station validates the MACI and if the MACI is valid, the base station starts to set the key id for the (IK, CK) to the value selected by the mobile station (in NEW_KEY_ID and SDU_KEY_ID), regardless of the current key id being used at the base station. The (IK, CK) pair and NEW_SSEQ_H can become in “in use” in the base station. The (IK, CK) pair is now successfully restored. The base station resends the *RES* until it gets the expected *Security Mode Completion Order*.

2.3.12.5.4 Key Strength Reduction Algorithm

Due to local security regulations, the base station may ask the mobile station to perform the Key Strength Reduction Algorithm (by setting $ENC\_KEY\_SIZE_r$) and use the resultant key from the algorithm. The Key Strength Reduction Algorithm uses the encryption key, RAND, and $ENC\_KEY\_SIZE_r$ to determine the values of the inputs to the algorithm. The key strength reduction procedure is shown in Figure 2.3.12.5.4-1. The algorithm is defined in [44].

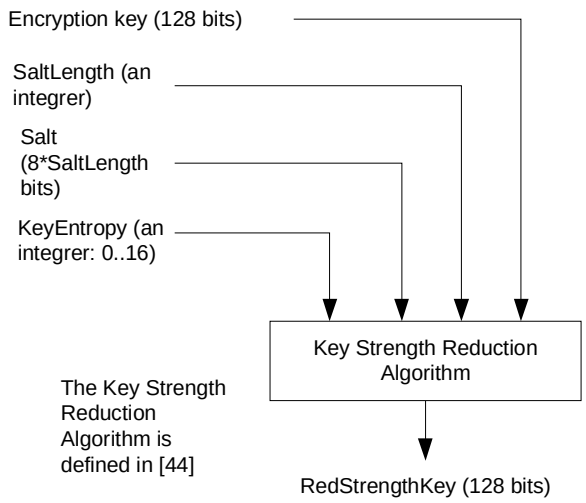

Figure 2.3.12.5.4-1. Key Strength Reduction

The input parameters of KeyStrengthRedAlg (see [44]) shall be set as follows:

- KeyLength shall be set to 16.
- OriginalKey shall be set to ENC_KEY[KEY_ID].
- SaltLength shall be set to 4.
- Salt shall be set to $RAND_S$.
- KeyEntropy shall be set to $ENC\_KEY\_SIZE_r$.

The mobile station shall set the ENC_KEY[KEY_ID] to RedStrengthKey.

2.3.12.5.5 Message Integrity Check Negotiation and Other Requirements

The base station shall indicate the supported user integrity algorithms in the SIG_INTEGRITY_SUP field in the *Extended System Parameters Message* and *ANSI-41 System Parameters Message*.

The mobile station shall indicate to the base station the message integrity algorithms supported and preferred by using SIG_INTEGRITY_SUP and SIG_INTEGRITY_REQ in one of the following messages:

- *Registration Message*
- *Origination Message*
- *Page Response Message*
- *Security Mode Request Message*
- *Status Response Message* (in Encryption Capability information record)
- *Extended Status Response Message* (in Encryption Capability information record)

In response, the base station shall select the integrity algorithm to be used among the

integrity algorithms that are supported by both the mobile station and the base station, and then compute the MAC-I of a *Registration Accepted Order*, *Extended Channel Assignment Message*, or *Security Mode Command Message* based on the selected algorithm.

If and only if the base station sends a *Registration Accepted Order*, *Extended Channel Assignment Message*, or *Security Mode Command Message* with the CHANGE_KEYS field[26] set to '1', the base station shall supply the base station LAC layer with the 24-bit value carried in NEW_SSEQ_H field and the 2-bit value in the NEW_KEY_ID field in the *Registration Message*, *Origination Message*, *Page Response Message*, *Authentication Response Message*, or the *Security Mode Request Message* that the base station is responding to.

2.3.13 Lock and Maintenance Required Orders

The mobile station shall have memory to store the lock reason code ($LCKRSN\_P_{s-p}$) received in the *Lock Until Power-Cycled Order*. The data retention time under power-off conditions shall be at least 48 hours.

The mobile station shall have memory to store the maintenance reason code ($MAINTRSN_{s-p}$) received in the *Maintenance Required Order*. The data retention time under power-off conditions shall be at least 48 hours.

There are no requirements on the use of the lock and maintenance reason codes, and interpretation and use are implementation dependent.

2.3.14 Mobile Station Revision Identification

The mobile station shall provide memory to store the following parameters sent in the *Status Message*, the *Status Response Message*, or *the Extended Status Response Message* (*Terminal Information* record or Extended Terminal information record):

- Mobile manufacturer code ($MOB\_MFG\_CODE_p$)
- Manufacturer's model number (MOB_MODEL_p)
- Firmware revision number ($MOB\_FIRM\_REV_p$)

In addition, the mobile station shall provide memory to store the following parameter for each supported band class:

- Protocol revision number ($MOB\_P\_REV_p$)

2.3.15 Temporary Mobile Subscriber Identity

2.3.15.1 Overview

The Temporary Mobile Subscriber Identity (TMSI) is a temporary locally assigned number used for addressing the mobile station. The mobile station obtains a TMSI when assigned

[26] The base station sets the CHANGE_KEYS field to '1' to trigger the mobile station to reinitialize the crypto-sync and the keys or to reinitialize just the crypto-sync alone depending on different cases.

by the base station. The TMSI as a number does not have any association with the mobile station's IMSI, ESN, or directory number all of which are permanent identifications.

A TMSI zone is an arbitrary set of base stations for the administrative assignment of TMSIs. A TMSI_CODE is uniquely assigned to a mobile station inside a TMSI zone. A TMSI zone is identified by the TMSI_ZONE field. The same TMSI_CODE may be reused to identify a different mobile station in a different TMSI zone. The pair (TMSI_ZONE, TMSI_CODE) is a globally unique identity for the mobile station. This pair is called the full TMSI. The TMSI_CODE can be two, three, or four octets in length. The TMSI_ZONE can range from 1 to 8 octets in length. Figure 2.3.15-1 shows an example of a TMSI_ZONE where the TMSI_ZONE is a subset of the NID (see 2.6.5.2).

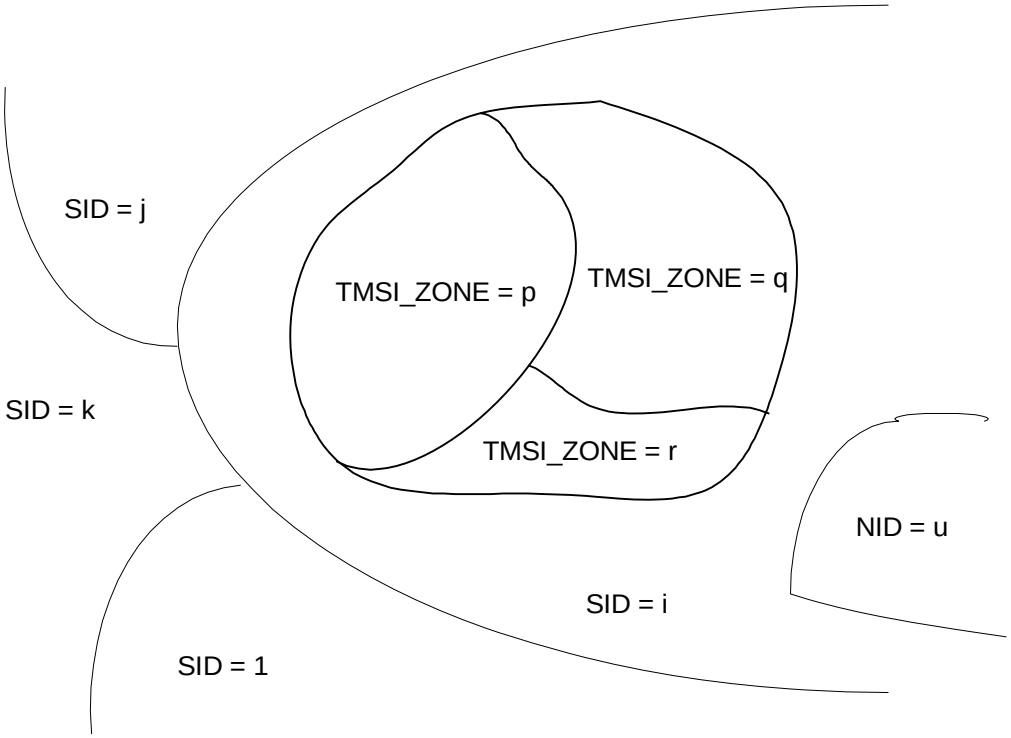

Figure 2.3.15-1. TMSI Zone Example

The base station sends a *TMSI Assignment Message* to assign a TMSI. In response, the mobile station sends a *TMSI Assignment Completion Message*. The base station instructs the mobile station to delete the TMSI by sending a *TMSI Assignment Message* with all the bits in the TMSI_CODE field set equal to '1'.

The TMSI expiration time is used to automatically delete the assigned TMSI. The mobile station obtains the expiration time when the TMSI is assigned in the *TMSI Assignment Message*. The mobile station compares the expiration time to the current System Time when it powers up and periodically during operation.

Whenever the mobile station sends its full TMSI, the mobile station sets a timer, called the full-TMSI timer. If the full-TMSI timer expires, the mobile station deletes the TMSI by setting all bits in the TMSI_CODE field to '1'.

2.3.15.2 TMSI Assignment Memory

The mobile station shall provide memory to store the following parameters:

- 4-bit assigning TMSI zone length ($ASSIGNING\_TMSI\_ZONE\_LEN_{s-p}$)
- 8-octet assigning TMSI zone ($ASSIGNING\_TMSI\_ZONE_{s-p}$)
- 4-octet TMSI code ($TMSI\_CODE_{s-p}$)
- 3-octet TMSI expiration time ($TMSI\_EXP\_TIME_{s-p}$)

2.4 Accumulated Statistics

2.4.1 Monitored Quantities and Statistics

The mobile station shall store the value described in Table 2.4.1-1.

Table 2.4.1-1. Monitored Quantities and Statistics

Quantity Identifier	Length (bits)	Description
OTHER_SYS_TIME	36	The SYS_TIME field from the most recently received *Sync Channel Message*

2.4.2 Accumulated Paging, Broadcast, and Forward Common Control Channel Statistics

The mobile station shall maintain the counters shown in Table 2.4.2-1. The counters shall have the length as specified in Table 2.4.2-1. The mobile station shall initialize each counter described herein to zero upon power-on; the mobile station shall not re-initialize any counter described herein at any other time except upon command from the base station. Each counter shall be maintained modulo 2^{Length}, where Length is specified in Table 2.4.2-1.

The mobile station shall increment the counter PAG_6 each time that it declares a loss of the Paging Channel (see 2.6.2.1.1.4). The mobile station shall increment the counter PAG_7 for each idle handoff it performs. The mobile station shall increment the counter FCCCH_4 each time that it declares a loss of the Forward Common Control Channel (see 2.6.2.1.1.4). The mobile station shall increment the counter BCCH_5 each time that it declares a loss of the Broadcast Control Channel (see 2.6.2.1.1.4).

Table 2.4.2-1. Accumulated PCH/BCCH/F-CCCH Channel Statistics

Counter Identifier	Length (bits)	Description
PAG_6	16	Number of times that the mobile station declared a loss of the Paging Channel
PAG_7	16	Number of mobile station idle handoffs

FCCCH_4	16	Number of times that the mobile station declared a loss of the Forward Common Control Channel
BCCH_5	16	Number of times that the mobile station declared a loss of the Broadcast Control Channel

2.5 Reserved

SECTION (CONTINUED)

2.6 Layer 3 Processing

This section describes mobile station Layer 3 processing. It contains frequent references to the messages that flow between the mobile station and base station. While reading this section, it may be helpful to refer to the PDU formats (see 2.7 and 3.7), and to the message flow examples (see Annex B and Annex C).

The mobile station shall ignore fields at the end of messages that do not exist in the protocol revision supported by the mobile station.

The values for the time and numerical constants used in this section (e.g., T_{20m}, N_{4m}) are specified in Annex D.

As illustrated in Figure 2.6-1, mobile station Layer 3 processing consists of the following states:

- *Mobile Station Initialization State* - In this state, the mobile station selects and acquires a system.
- *Mobile Station Idle State* - In this state, the mobile station monitors messages on the f-csch.
- *System Access State* - In this state, the mobile station sends messages to the base station on the r-csch and receives messages from the base station on the f-csch.
- *Mobile Station Control on the Traffic Channel State* - In this state, the mobile station communicates with the base station using the f/r-dsch and f/r-dtch.

After power is applied to the mobile station, it shall enter the *System Determination Substate* of the *Mobile Station Initialization State* with a power-up indication (see 2.6.1.1).

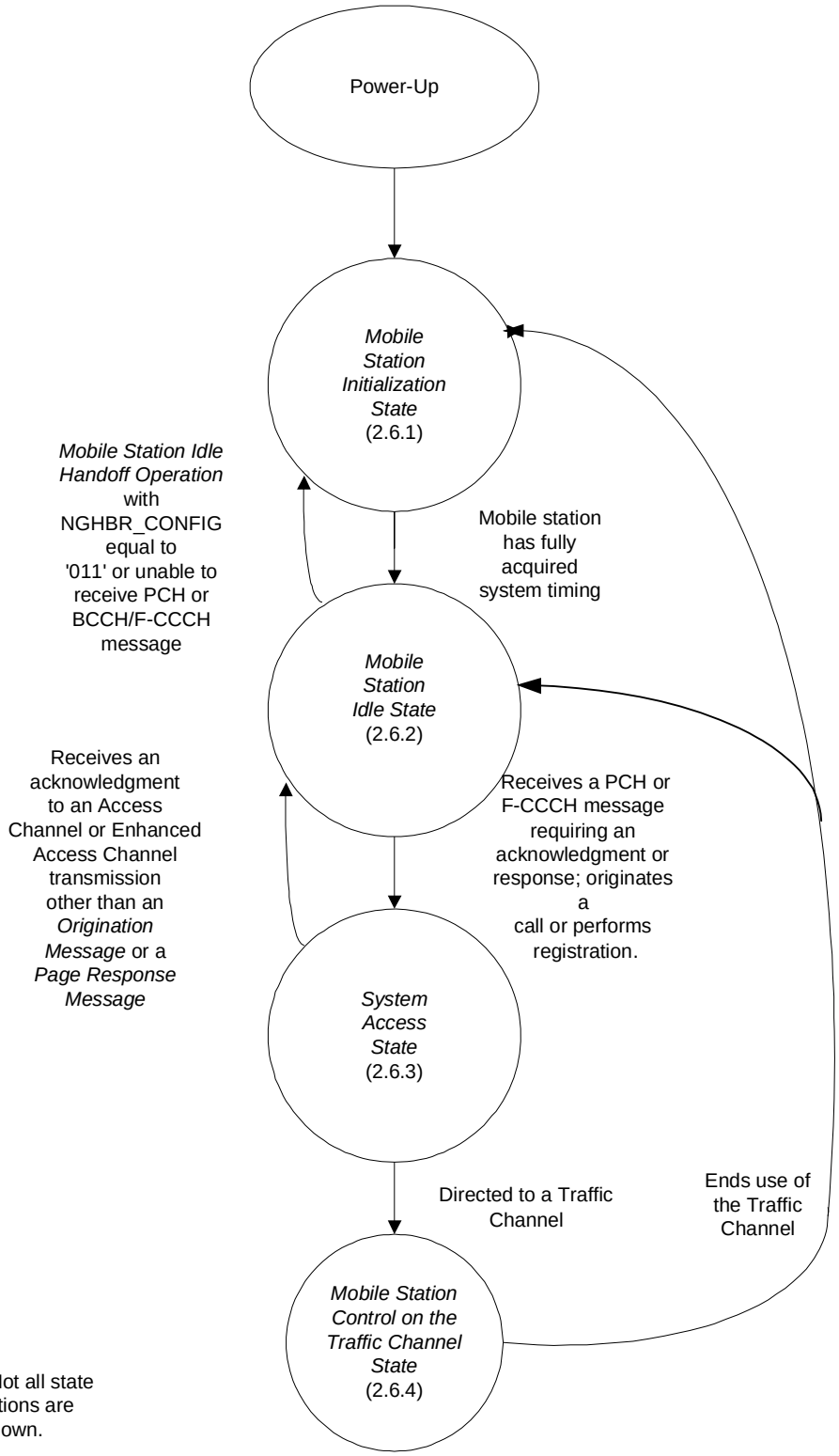

Note: Not all state transitions are shown.

Figure 2.6-1. Mobile Station Layer 3 Processing States

2.6.1 Mobile Station Initialization State

In this state, the mobile station first selects a system to use. If the selected system is a CDMA system, the mobile station proceeds to acquire and then synchronize to the CDMA system.

As illustrated in Figure 2.6.1-1, the *Mobile Station Initialization State* consists of the following substates:

- *System Determination Substate* - In this substate, the mobile station selects which system to use.
- *Pilot Channel Acquisition Substate* - In this substate, the mobile station acquires the Pilot Channel of a CDMA system.
- *Sync Channel Acquisition Substate* - In this substate, the mobile station obtains system configuration and timing information for a CDMA system.
- *Timing Change Substate* - In this substate, the mobile station synchronizes its timing to that of a CDMA system.

While in the *Mobile Station Initialization State*, the mobile station shall update all active registration timers as specified in 2.6.5.5.1.2.

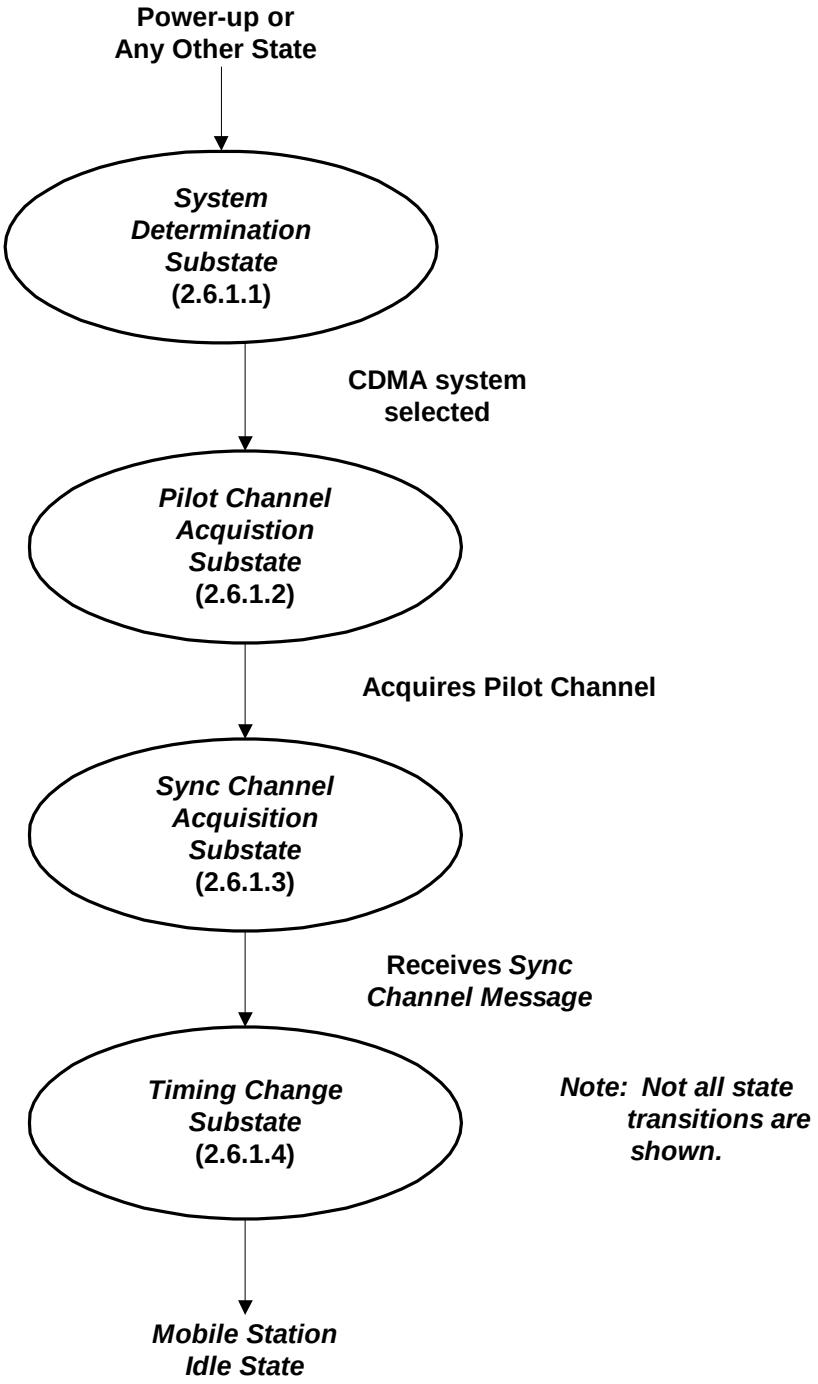

Figure 2.6.1-1. Mobile Station Initialization State

2.6.1.1 System Determination Substate

In this substate, the mobile station selects the system to use.

Upon entering the *System Determination Substate*, the mobile station shall initialize the registration parameters as specified in 2.6.5.5.1.1.

If the mobile station enters the *System Determination Substate* with a power-up indication, the mobile station shall set $RAND_S$ to 0 (see 2.3.12.1.2), $PACA_S$ to disabled, PACA_CANCEL to '0', the PACA state timer to disabled, $NDSS\_ORIG_S$ to disabled, $MAX\_REDIRECT\_DELAY_S$ to 31, $REDIRECTION_S$ to disabled, all entries of $SDB\_SO\_OMIT_S$ to '0', RER_MODE_ENABLED to NO, TKZ_MODE_ENABLED to NO, TKZ_MODE_PENDING to NO, RSC_MODE_ENABLED to NO, and $T\_SLOTTED_S$ to T_{74m}. The mobile station shall select a system in accordance with the custom system selection process (see 2.6.1.1.1) and shall attempt to acquire the selected system (see 2.6.1.1.4).

If the mobile station enters the *System Determination Substate* with any indication other than a power-up indication, and if $PACA_S$ is equal to enabled, the mobile station shall also set $PACA_S$ to disabled, PACA_CANCEL to '0', the PACA state timer to disabled, and should indicate to the user that the PACA call has been canceled.

If the mobile station enters the *System Determination Substate* with an acquisition failure indication, the mobile station shall perform the following:

- If $REDIRECTION_S$ is equal to enabled, the mobile station shall attempt to select another system in accordance with the current redirection criteria (see 2.6.1.1.2). If the mobile station is able to select another system, the mobile station shall attempt to acquire the selected system (see 2.6.1.1.4). Otherwise, if the mobile station has exhausted all possible selections using the current redirection criteria, the mobile station shall perform the following:
  - The mobile station shall set $REDIRECTION_S$ to disabled.
  - The mobile station shall set $RETURN\_CAUSE_S$ to '0001'.
  - If $RETURN\_IF\_FAIL_S$ is equal to '1', the mobile station shall attempt to select the system from which it was redirected and shall attempt to acquire the selected system (see 2.6.1.1.4). The precise process for determining how to select the system from which the mobile station was redirected is left to the mobile station manufacturer.
  - If $RETURN\_IF\_FAIL_S$ is equal to '0', the mobile station shall select a system other than the system from which it was redirected in accordance with the custom system selection process (see 2.6.1.1.1) and shall attempt to acquire the selected system (see 2.6.1.1.4). The precise process that the mobile station uses to avoid selecting the system from which it was redirected is left to the mobile station manufacturer.
- If $REDIRECTION_S$ is equal to disabled, the mobile station shall select a system in accordance with the custom system selection process (see 2.6.1.1.1) and shall attempt to acquire the selected system (see 2.6.1.1.4).

If the mobile station enters the *System Determination Substate* with a new system indication, the mobile station shall set $REDIRECTION_S$ to disabled. If $NDSS\_ORIG_S$ is enabled, the mobile station shall set $NDSS\_ORIG_S$ to disabled and should indicate to the user that the call origination has been canceled. The mobile station shall select a system in accordance with the custom system selection process (see 2.6.1.1.1) and shall attempt to acquire the selected system (see 2.6.1.1.4).

If the mobile station enters the *System Determination Substate* with a new band indication, the mobile station shall set $REDIRECTION_S$ to disabled. If $NDSS\_ORIG_S$ is enabled, the mobile station shall set $NDSS\_ORIG_S$ to disabled and should indicate to the user that the call origination has been canceled. The mobile station shall attempt to acquire the system found on the frequency and band defined in NEW_BAND_RECORD (see 2.6.1.1.4).

If the mobile station enters the *System Determination Substate* with a CDMA available indication, the mobile station shall set $REDIRECTION_S$ to disabled. If $NDSS\_ORIG_S$ is enabled, the mobile station shall set $NDSS\_ORIG_S$ to disabled and should indicate to the user that the call origination is canceled. The mobile station should set $CDMACH_S$ to the CDMA Channel (CDMA_FREQ) specified in the *CDMA Capability Global Action Message* and should attempt to acquire a CDMA system on the specified CDMA channel (see 2.6.1.1.4). If the mobile station does not attempt to acquire a CDMA system on the specified CDMA Channel, the mobile station shall select a system in accordance with the custom system selection process (see 2.6.1.1.1) and shall attempt to acquire the selected system (see 2.6.1.1.4).

If the mobile station enters the *System Determination Substate* with an additional CDMA available indication, the mobile station shall set $REDIRECTION_S$ to disabled. If $NDSS\_ORIG_S$ is enabled, the mobile station shall set $NDSS\_ORIG_S$ to disabled and should indicate to the user that the call origination is canceled. The mobile station should set $CDMACH_S$ to the CDMA Channel (CDMA_FREQ) specified in the *CDMA Info Order* and should attempt to acquire a CDMA system on the specified CDMA channel (see 2.6.1.1.4). If the mobile station does not attempt to acquire a CDMA system on the specified CDMA Channel, the mobile station shall select a system in accordance with the custom system selection process (see 2.6.1.1.1) and shall attempt to acquire the selected system (see 2.6.1.1.4).

If the mobile station enters the *System Determination Substate* with a reselection indication, the mobile station shall set $REDIRECTION_S$ to disabled. If $NDSS\_ORIG_S$ is enabled, the mobile station shall set $NDSS\_ORIG_S$ to disabled and should indicate to the user that the call origination is canceled. The mobile station shall select a system in accordance with the custom system selection process (see 2.6.1.1.1) and shall attempt to acquire the selected system (see 2.6.1.1.4).

If the mobile station enters the *System Determination Substate* with an encryption/message integrity failure indication, the mobile station shall set $REDIRECTION_S$ to disabled, KEY_ID to '00', $D\_SIG\_ENCRYPT\_MODE_S$ to '000', $C\_SIG\_ENCRYPT\_MODE_S$ to '000', $LAST\_2G\_KEY\_ID_S$ to '00', $LAST\_3G\_KEY\_ID_S$ to '10', ENC_KEY[j] to NULL, INT_KEY[j] to NULL, TX_EXT_SSEQ[i][j] to 0, RX_EXT_SSEQ[i][j] to 0, where i ranges from '0' to '1' and j ranges from '00' to '11'. If $NDSS\_ORIG_S$ is enabled, the mobile station shall set $NDSS\_ORIG_S$ to disabled and should indicate to the user that the

call origination is canceled. The mobile station shall select a system in accordance with the custom system selection process (see 2.6.1.1.1) and shall attempt to acquire the selected system (see 2.6.1.1.4).

If the mobile station enters the *System Determination Substate* with a system reselection indication, the mobile station shall set $REDIRECTION_S$ to disabled. If $NDSS\_ORIG_S$ is enabled, the mobile station shall set $NDSS\_ORIG_S$ to disabled and should indicate to the user that the call origination is canceled. The mobile station should attempt to select a system available for system reselection as specified in 2.6.1.1.3, and should attempt to acquire the selected system (see 2.6.1.1.4). The precise process for determining how to select such a system is left to the mobile station manufacturer. If the mobile station does not attempt to select such a system, the mobile station shall select a system in accordance with the custom system selection process (see 2.6.1.1.1) and shall attempt to acquire the selected system (see 2.6.1.1.4).

If the mobile station enters the *System Determination Substate* with a rescan indication, the mobile station shall set $REDIRECTION_S$ to disabled. If $NDSS\_ORIG_S$ is enabled, the mobile station shall set $NDSS\_ORIG_S$ to disabled and should indicate to the user that the call origination is canceled. The mobile station shall select a system in accordance with the custom system selection process (see 2.6.1.1.1) and shall attempt to acquire the selected system (see 2.6.1.1.4).

If the mobile station enters the *System Determination Substate* with a protocol mismatch indication, the mobile station shall perform the following:

- If $REDIRECTION_S$ is equal to enabled, the mobile station shall attempt to select another system in accordance with the current redirection criteria (see 2.6.1.1.2). If the mobile station is able to select another system, the mobile station shall attempt to acquire the selected system (see 2.6.1.1.4). Otherwise, if the mobile station has exhausted all possible selections using the current redirection criteria, the mobile station shall perform the following:
  - The mobile station shall set $REDIRECTION_S$ to disabled.
  - The mobile station shall set $RETURN\_CAUSE_S$ to '0010'.
  - If $RETURN\_IF\_FAIL_S$ is equal to '1', the mobile station shall attempt to select the system from which it was redirected and shall attempt to acquire the selected system (see 2.6.1.1.4). The precise process for determining how to select the system from which the mobile station was redirected is left to the mobile station manufacturer.
  - If $RETURN\_IF\_FAIL_S$ is equal to '0', the mobile station shall select a system other than the system from which it was redirected in accordance with the custom system selection process (see 2.6.1.1.1) and shall attempt to acquire the selected system (see 2.6.1.1.4). The precise process for determining how to avoid the system from which the mobile station was redirected is left to the mobile station manufacturer.

- If $REDIRECTION_S$ is equal to disabled, the mobile station shall select a system in accordance with the custom system selection process (see 2.6.1.1.1) and shall attempt to acquire the selected system (see 2.6.1.1.4).

If the mobile station enters the *System Determination Substate* with a system lost indication, the mobile station shall set $REDIRECTION_S$ to disabled. If $NDSS\_ORIG_S$ is enabled, the mobile station shall set $NDSS\_ORIG_S$ to disabled and should indicate to the user that the call origination is canceled. The mobile station should attempt to select the same system that was lost, and should attempt to acquire the selected system (see 2.6.1.1.4). The precise process for determining how to select the same system is left to the mobile station manufacturer. If the mobile station does not attempt to select the same system, the mobile station shall select a system in accordance with the custom system selection process (see 2.6.1.1.1) and shall attempt to acquire the selected system (see 2.6.1.1.4).

If the mobile station enters the *System Determination Substate* with a lock indication, the mobile station shall set $REDIRECTION_S$ to disabled. If $NDSS\_ORIG_S$ is enabled, the mobile station shall set $NDSS\_ORIG_S$ to disabled and should indicate to the user that the call origination is canceled. The mobile station shall select a system in accordance with the custom system selection process (see 2.6.1.1.1) and shall attempt to acquire the selected system (see 2.6.1.1.4).

If the mobile station enters the *System Determination Substate* with an unlock indication, the mobile station shall set $REDIRECTION_S$ to disabled. If $NDSS\_ORIG_S$ is enabled, the mobile station shall set $NDSS\_ORIG_S$ to disabled and should indicate to the user that the call origination is canceled. The mobile station shall select a system in accordance with the custom system selection process (see 2.6.1.1.1) and shall attempt to acquire the selected system (see 2.6.1.1.4).

If the mobile station enters the *System Determination Substate* with an access denied indication, the mobile station shall set $REDIRECTION_S$ to disabled. If $NDSS\_ORIG_S$ is enabled, the mobile station shall set $NDSS\_ORIG_S$ to disabled and should indicate to the user that the call origination is canceled. The mobile station shall select a system in accordance with the custom system selection process (see 2.6.1.1.1) and shall attempt to acquire the selected system (see 2.6.1.1.4).

If the mobile station enters the *System Determination Substate* with an ACCT blocked indication, the mobile station shall set $REDIRECTION_S$ to disabled. If $NDSS\_ORIG_S$ is enabled, the mobile station shall set $NDSS\_ORIG_S$ to disabled. The mobile station shall select a system in accordance with the custom system selection process (see 2.6.1.1.1) and shall attempt to acquire the selected system (see 2.6.1.1.4).

If the mobile station enters the *System Determination Substate* with an NDSS off indication, the mobile station shall set $REDIRECTION_S$ to disabled. If $NDSS\_ORIG_S$ is enabled, the mobile station shall set $NDSS\_ORIG_S$ to disabled and should indicate to the user that the call origination is canceled. The mobile station shall select a system in accordance with the custom system selection process (see 2.6.1.1.1) and shall attempt to acquire the selected system (see 2.6.1.1.4).

If the mobile station enters the *System Determination Substate* with a release indication and $REDIRECTION_S$ is equal to enabled, the mobile station shall attempt to select the same system on which the release occurred and shall attempt to acquire the selected system (see 2.6.1.1.4). The precise process for determining how to select the same system is left to the mobile station manufacturer. If $REDIRECTION_S$ is equal to disabled, the mobile station shall select a system in accordance with the custom system selection process (see 2.6.1.1.1) and shall attempt to acquire the selected system (see 2.6.1.1.4). If $NDSS\_ORIG_S$ is enabled, the mobile station shall set $NDSS\_ORIG_S$ to disabled.

If the mobile station enters the *System Determination Substate* with an error indication, the mobile station shall set $REDIRECTION_S$ to disabled. If $NDSS\_ORIG_S$ is enabled, the mobile station shall set $NDSS\_ORIG_S$ to disabled and should indicate to the user that the call origination is canceled. The mobile station shall select a system in accordance with the custom system selection process (see 2.6.1.1.1) and shall attempt to acquire the selected system (see 2.6.1.1.4).

If the mobile station enters the *System Determination Substate* with a redirection indication, the mobile station shall set $REDIRECTION_S$ to enabled. The mobile station shall delete all entries from the $ZONE\_LIST_S$ and $SID\_NID\_LIST_S$. The mobile station shall select a system in accordance with the current redirection criteria (see 2.6.1.1.2) and shall attempt to acquire the selected system (see 2.6.1.1.4).

If the mobile station enters the *System Determination Substate* with a registration rejected indication, the mobile station shall perform the following:

- The mobile station shall delete the newly generated encryption key (if any).
- If $REDIRECTION_S$ is equal to enabled, the mobile station shall perform the following:
  - The mobile station shall set $REDIRECTION_S$ to disabled.
  - The mobile station shall set $RETURN\_CAUSE_S$ to '0011'.
  - If $RETURN\_IF\_FAIL_S$ is equal to '1', the mobile station shall attempt to select the system from which it was redirected and shall attempt to acquire the selected system (see 2.6.1.1.4). The precise process for determining how to select the system from which the mobile station was redirected is left to the mobile station manufacturer.
  - If $RETURN\_IF\_FAIL_S$ is equal to '0', the mobile station shall select a system other than the system from which it was redirected in accordance with the custom system selection process (see 2.6.1.1.1) and shall attempt to acquire the selected system (see 2.6.1.1.4). The precise process for determining how to avoid the system from which the mobile station was redirected is left to the mobile station manufacturer.
- If $REDIRECTION_S$ is equal to disabled, the mobile station shall select a system in accordance with the custom system selection process (see 2.6.1.1.1) and shall attempt to acquire the selected system (see 2.6.1.1.4).

If the mobile station enters the *System Determination Substate* with a wrong system indication, the mobile station shall perform the following:

- If $REDIRECTION_S$ is equal to enabled, the mobile station shall attempt to select another system in accordance with the current redirection criteria (see 2.6.1.1.2). If the mobile station is able to select another system, the mobile station shall attempt to acquire the selected system (see 2.6.1.1.4). Otherwise, if the mobile station has exhausted all possible selections using the current redirection criteria, the mobile station shall perform the following:
  - The mobile station shall set $REDIRECTION_S$ to disabled.
  - The mobile station shall set $RETURN\_CAUSE_S$ to '0100'.
  - If $RETURN\_IF\_FAIL_S$ is equal to '1', the mobile station shall attempt to select the system from which it was redirected and shall attempt to acquire the selected system (see 2.6.1.1.4). The precise process for determining how to select the system from which the mobile station was redirected is left to the mobile station manufacturer.
  - If $RETURN\_IF\_FAIL_S$ is equal to '0', the mobile station shall select a system other than the system from which it was redirected in accordance with the custom system selection process (see 2.6.1.1.1) and shall attempt to acquire the selected system (see 2.6.1.1.4). The precise process for determining how to avoid the system from which the mobile station was redirected is left to the mobile station manufacturer.
- If $REDIRECTION_S$ is equal to disabled, the mobile station shall select a system in accordance with the custom system selection process (see 2.6.1.1.1) and shall attempt to acquire the selected system (see 2.6.1.1.4).

If the mobile station enters the *System Determination Substate* with a wrong network indication, the mobile station shall perform the following:

- If $REDIRECTION_S$ is equal to enabled, the mobile station shall attempt to select another system in accordance with the current redirection criteria (see 2.6.1.1.2). If the mobile station is able to select another system, the mobile station shall attempt to acquire the selected system (see 2.6.1.1.4). Otherwise, if the mobile station has exhausted all possible selections using the current redirection criteria, the mobile station shall perform the following:
  - The mobile station shall set $REDIRECTION_S$ to disabled.
  - The mobile station shall set $RETURN\_CAUSE_S$ to '0101'.
  - If $RETURN\_IF\_FAIL_S$ is equal to '1', the mobile station shall attempt to select the system from which it was redirected and shall attempt to acquire the selected system (see 2.6.1.1.4). The precise process for determining how to select the system from which the mobile station was redirected is left to the mobile station manufacturer.

- If $RETURN\_IF\_FAIL_S$ is equal to '0', the mobile station shall select a system other than the system from which it was redirected in accordance with the custom system selection process (see 2.6.1.1.1) and shall attempt to acquire the selected system (see 2.6.1.1.4). The precise process for determining how to avoid the system from which the mobile station was redirected is left to the mobile station manufacturer.

- If $REDIRECTION_S$ is equal to disabled, the mobile station shall select a system in accordance with the custom system selection process (see 2.6.1.1.1) and shall attempt to acquire the selected system (see 2.6.1.1.4).

2.6.1.1.1 Custom System Selection Process

The precise process for custom system selection is left to the mobile station manufacturer.

The mobile station shall perform the custom system selection process as follows:

- The mobile station shall determine which system to use.
- If the mobile station is to use a CDMA system, it shall set $CDMABAND_S$ to the band class (see [30]) for the selected system.
- If the mobile station is to use a CDMA system with $CDMABAND_S$ = '00000' or $CDMABAND_S$ = '00011', it shall perform the following:
  - If the mobile station is to use System A, it shall set $SERVSYS_S$ to SYS_A. If the mobile station is to use System B, it shall set $SERVSYS_S$ to SYS_B.
  - The mobile station shall set $CDMACH_S$ either to the Primary or Secondary CDMA Channel number (see [2]) for the selected serving system ($SERVSYS_S$). If the mobile station fails to acquire a CDMA system on the first CDMA Channel it tries, the mobile station should attempt to acquire on the alternate CDMA Channel (Primary or Secondary) before attempting other alternatives.
- If the mobile station is to use a CDMA system with $CDMABAND_S$ other than '00000' or '00011', it shall set $CDMACH_S$ to the CDMA Channel number (see [2]) for the selected system.

2.6.1.1.2 System Selection Using Current Redirection Criteria

To perform system selection using current redirection criteria:

- When a single redirection record is received in a *Service Redirection Message*, a *Global Service Redirection Message*, or an *Extended Global Service Redirection Message*, the mobile station shall use the information received and stored in the variable $REDIRECT\_REC_S$ to perform current system selection as specified in 2.6.1.1.2.1.
- If multiple redirection records are received in an *Extended Global Service Redirection Message*, the mobile station shall process at most *j* sequential redirection records, where *j* is equal to the number of redirection records in REDIRECT_REC_LIST as follows:

- If the DELETE_TMSI field of REDIRECT_REC_LIST[*k*] is equal to '1', the mobile station shall set all the bits of $TMSI\_CODE_{s-p}$ to '1'; otherwise the mobile station shall set $TMSI\_CODE_{s-p}$ to TEMP_TMSI_CODE.
- Store the redirection record ($REDIRECT\_REC_s$ = REDIRECT_REC_LIST[*k*]).
- If the RECORD_TYPE field of REDIRECT_REC_LIST[*k*] is equal to '00000001' the mobile station shall:
  - Set $CDMA\_MODE_s$ to '1'.
  - Set $DIGITAL\_REG_{s-p}$ to '00000000'.
  - Set the maximum delay upon redirection ($MAX\_REDIRECT\_DELAY_s$ = MAX_REDIRECT_DELAY field of REDIRECT_REC_LIST[*k*]).
- If the mobile station has not exhausted all possible selections using the REDIRECT_REC_LIST[k], the mobile station shall attempt to select a system according to 2.6.1.1.2.1; otherwise, if k is not the last record in REDIRECT_REC_LIST, the mobile station shall continue the system selection with REDIRECT_REC_LIST[k+1].

2.6.1.1.2.1 System Selection Using Current Redirection Record

If the RECORD_TYPE field of $REDIRECT\_REC_s$ is equal to '00000001' and the mobile station supports Band Class 0, the mobile station shall perform system selection as follows:

- If the SYS_ORDERING field is equal to '000', the mobile station shall make sequential system selections as follows:
  - The mobile station shall set $SERVSYS_s$ either to SYS_A or SYS_B. The precise process for determining how many system selections to make and for determining whether to use SYS_A or SYS_B is left to the mobile station manufacturer.
- If the SYS_ORDERING field is equal to '001', the mobile station shall select no more than one system selection as follows:
  - The mobile station shall set $SERVSYS_s$ to SYS_A.
- If the SYS_ORDERING field is equal to '010', the mobile station shall select no more than one system selection as follows:
  - The mobile station shall set $SERVSYS_s$ to SYS_B.
- If the SYS_ORDERING field is equal to '011', the mobile station shall make at most two sequential system selections as follows:
  - For the first system selection, the mobile station shall set $SERVSYS_s$ to SYS_A.
  - For the second system selection, the mobile station shall set $SERVSYS_s$ to SYS_B.
- If the SYS_ORDERING field is equal to '100', the mobile station shall make at most 2 sequential system selections as follows:

- For the first system selection, the mobile station shall set $SERVSYS_S$ to SYS_B.
- For the second system selection, the mobile station shall set $SERVSYS_S$ to SYS_A.

- If the SYS_ORDERING field is equal to '101', the mobile station shall make at most 2 sequential system selections as follows:
  - For the first system selection, the mobile station shall set $SERVSYS_S$ either to SYS_A or SYS_B. The precise process for determining whether to use SYS_A or SYS_B first is left to the mobile station manufacturer.
  - For the second system selection, the mobile station shall set $SERVSYS_S$ to SYS_B if SYS_A was used for the first selection, or to SYS_A if SYS_B was used for the first selection.

If the RECORD_TYPE field of $REDIRECT\_REC_S$ is equal to '00000010', the mobile station shall perform system selection as follows:

- If the mobile station supports CDMA mode operation in the band class identified by the BAND_CLASS field, the mobile station shall make at most *n* sequential system selections, where *n* is equal to the value of the NUM_CHANS field, as follows:
  - For the ith system selection, where *i* ranges from 1 to *n*:
    - If the mobile station supports operation on the CDMA channel associated with the value of the ith occurrence of the CDMA_CHAN field and the CDMA channel is supported for at least one band subclass listed in the record (when included), the mobile station shall set $CDMACH_S$ to the value of the ith occurrence of the CDMA_CHAN field and shall set $CDMABAND_S$ to the value specified in the BAND_CLASS field.
    - Otherwise, the mobile station shall not make the ith system selection.

2.6.1.1.3 System Selection Using System Reselection Criteria

The precise process for selecting a system using system reselection criteria is left to the mobile station manufacturer. The mobile station should use information received in the *Neighbor List Message*, *Extended Neighbor List Message*, *General Neighbor List Message*, or the *Universal Neighbor List Message* to perform the system reselection process as follows:

- If there are pilots in the Neighbor List on a different Frequency Assignment than that of the mobile station, the mobile station may select the CDMA system consisting of these neighbor pilots. If the mobile station is to use a CDMA system, it shall set $CDMABAND_S$ to the band class (see [30]) for the selected system and shall set $CDMACH_S$ to the CDMA Channel number (see [2]) for the selected system.

2.6.1.1.4 Acquiring the Selected System

The mobile station shall attempt to acquire the selected system as follows:

- If the selected system is a CDMA system, the mobile station shall enter the *Pilot Channel Acquisition Substate*.

2.6.1.2 Pilot Channel Acquisition Substate

In this substate, the mobile station acquires the Pilot Channel of the selected CDMA system.

Upon entering the *Pilot Channel Acquisition Substate*, the mobile station shall tune to the CDMA Channel number equal to $CDMACH_s$, shall set its code channel for the Pilot Channel (see [2]) and shall search for the Pilot Channel for no longer than T_{20m} seconds (see Annex D). If the mobile station acquires the Pilot Channel, the mobile station shall enter the *Sync Channel Acquisition Substate*.

If the mobile station determines that it is unlikely to acquire the Pilot Channel within T_{20m} seconds, the mobile station may enter the *System Determination Substate* with an acquisition failure indication (see 2.6.1.1). The time, to either acquire the Pilot Channel or determine that Pilot Channel acquisition is unlikely, shall not exceed T_{20m} seconds (see Annex D), after which the mobile station shall enter the *System Determination Substate* with an acquisition failure indication (see 2.6.1.1).

2.6.1.3 Sync Channel Acquisition Substate

In this substate, the mobile station receives and processes the *Sync Channel Message* to obtain system configuration and timing information. A valid *Sync Channel Message* is one that passes the CRC check and is in the appropriate format according to the protocol revision of the base station.

Upon entering the *Sync Channel Acquisition Substate*, the mobile station shall set its code channel for the Sync Channel (see [2]).

If the mobile station does not receive a valid *Sync Channel Message* within T_{21m} seconds, the mobile station shall enter the *System Determination Substate* with an acquisition failure indication.

If the mobile station receives a valid *Sync Channel Message* within T_{21m} seconds, but the protocol revision level supported by the mobile station ($MOB\_P\_REV_p$ of the current band class) is less than the minimum protocol revision level supported by the base station ($MIN\_P\_REV_r$), the mobile station shall enter the *System Determination Substate* with a protocol mismatch indication (see 2.6.1.1).

If the mobile station receives a valid *Sync Channel Message* within T_{21m} seconds, but the values of the $PRAT_r$, the $SR1\_BRAT\_NON\_TD_r$, the $SR1\_BRAT\_TD_r$, or the $SR3\_BRAT_r$ fields are designated as reserved by the protocol revision level supported by the mobile station ($MOB\_P\_REV_p$ of the current band class), the mobile station shall enter the *System Determination Substate* with a protocol mismatch indication (see 2.6.1.1).

If the mobile station receives a valid *Sync Channel Message* within T_{21m} seconds and the protocol revision level supported by the mobile station ($MOB\_P\_REV_p$ of the current band class) is greater than or equal to the minimum protocol revision level supported by the

base station ($MIN\_P\_REV_r$), the mobile station shall store the following information from the message:

- Protocol revision level ($P\_REV_s = P\_REV_r$)
- Minimum protocol revision level ($MIN\_P\_REV_s = MIN\_P\_REV_r$)
- System identification ($SID_s = SID_r$)
- Network identification ($NID_s = NID_r$)
- Pilot PN sequence offset index ($PILOT\_PN_s = PILOT\_PN_r$)
- Long code state ($LC\_STATE_s = LC\_STATE_r$)
- System Time ($SYS\_TIME_s = SYS\_TIME_r$)
- Paging Channel data rate ($PRAT_s = PRAT_r$)
- Protocol revision level currently in use ($P\_REV\_IN\_USE_s$ = the lesser value of P_REV_s and $MOB\_P\_REV_p$ of the current band class)
- SR1 Non-TD BCCH support indicator ($SR1\_BCCH\_NON\_TD\_INCL_s = SR1\_BCCH\_NON\_TD\_INCL_r$)
- SR1 TD BCCH support indicator ($SR1\_TD\_INCL_s = SR1\_TD\_INCL_r$)
- If $SR1\_BCCH\_NON\_TD\_INCL_r$ is equal to '1':
  - $SR1\_BRAT\_NON\_TD_s = SR1\_BRAT\_NON\_TD_r$;
  - $SR1\_CRAT\_NON\_TD_s = SR1\_CRAT\_NON\_TD_r$;
  - $BCCH\_CODE\_CHAN\_NON\_TD_s = SR1\_BCCH\_CODE\_CHAN\_NON\_TD_r$.
- If $SR1\_TD\_INCL_r$ is included and is equal to '1', and the mobile station supports the Transmit Diversity indicated by $SR1\_TD\_MODE_r$:
  - $SR1\_BRAT\_TD_s = SR1\_BRAT\_TD_r$;
  - $SR1\_CRAT\_TD_s = SR1\_CRAT\_TD_r$;
  - $BCCH\_CODE\_CHAN\_TD_s = SR1\_BCCH\_CODE\_CHAN\_TD_r$.
- If the mobile station supports the Transmit Diversity, $SR1\_BCCH\_NON\_TD\_INCL_r$ is equal to '1', and $SR1\_TD\_INCL_r$ is equal to '0':
  - $SR1\_BRAT\_TD_s = SR1\_BRAT\_NON\_TD_r$;
  - $SR1\_CRAT\_TD_s = SR1\_CRAT\_NON\_TD_r$;
  - $BCCH\_CODE\_CHAN\_TD_s = SR1\_BCCH\_CODE\_CHAN\_NON\_TD_r$.
- SR3 support indicator ($SR3\_INCL_s = SR3\_INCL_r$)

The mobile station shall ignore any fields at the end of the *Sync Channel Message* that are not defined according to the protocol revision level ($MOB\_P\_REV_p$ of the current band class) being used by the mobile station.

The mobile station may store the following information from the message:

- Number of leap seconds that have occurred since the start of System Time ($LP\_SEC_s = LP\_SEC_r$)
- Offset of local time from System Time ($LTM\_OFF_s = LTM\_OFF_r$)
- Daylight savings time indicator ($DAYLT_s = DAYLT_r$)

If $REDIRECTION_s$ and $NDSS\_ORIG_s$ are equal to disabled, the mobile station may enter the *System Determination Substate* with a reselection indication (see 2.6.1.1).

If $REDIRECTION_s$ is equal to enabled, the EXPECTED_SID field of $REDIRECT\_REC_s$ is not equal to 0, and SID_r is not equal to EXPECTED_SID, the mobile station shall enter the *System Determination Substate* with a wrong system indication (see 2.6.1.1). If $REDIRECTION_s$ is equal to enabled, the EXPECTED_NID field of $REDIRECT\_REC_s$ is not equal to 65535, and NID_r is not equal to EXPECTED_NID, the mobile station shall enter the *System Determination Substate* with a wrong network indication.

If $P\_REV\_IN\_USE_s$ is less than 6, the mobile station shall set $POTENTIAL\_CDMACH_s$ to $CDMA\_FREQ_r$.

If $P\_REV\_IN\_USE_s$ is equal to six, the mobile station shall perform the following:

- If the mobile station supports the Quick Paging Channel or any radio configuration in the Radio Configuration Class 2 or 3 (see 1.1.1), the mobile station shall set $POTENTIAL\_CDMACH_s$ equal to $EXT\_CDMA\_FREQ_r$; otherwise, the mobile station shall set $POTENTIAL\_CDMACH_s$ equal to $CDMA\_FREQ_r$.

If $P\_REV\_IN\_USE_s$ is greater than six, the mobile station shall perform the following:

- If the mobile station supports Spreading Rate 3 on the common channels and $SR3\_INCL_s$ is equal to ‘1’, the mobile station shall set:
  - $BRAT_s = SR3\_BRAT_r$;
  - $BCCH\_CODE\_RATE_s = 1/3$;
  - $BCCH_s = SR3\_BCCH\_CODE\_CHAN_r$;
  - $SR3\_PRIMARY\_PILOT_s = SR3\_PRIMARY\_PILOT_r$;
  - $SR3\_PILOT\_POWER1_s = SR3\_PILOT\_POWER1_r$;
  - $SR3\_PILOT\_POWER2_s = SR3\_PILOT\_POWER2_r$;
  - If $SR3\_CENTER\_FREQ\_INCL_r$ is equal to ‘1’, $POTENTIAL\_CDMACH_s = SR3\_CENTER\_FREQ_r$; otherwise, $POTENTIAL\_CDMACH_s = EXT\_CDMA\_FREQ_r$.
- If the mobile station does not support Spreading Rate 3 on the common channel or if $SR3\_INCL_s$ is equal to ‘0’, the mobile station shall perform the following:
  - If $SR1\_TD\_INCL_r$ is equal to ‘1’ and the mobile station supports the Transmit Diversity mode specified by $SR1\_TD\_MODE_r$, the mobile station shall set:
    - $SR1\_TD\_MODE_s = SR1\_TD\_MODE_r$
    - $SR1\_TD\_POWER\_LEVEL_s = SR1\_TD\_POWER\_LEVEL_r$
    - $BRAT_s = SR1\_BRAT\_TD_r$

+ $BCCH\_CODE\_RATE_S = SR1\_CRAT\_TD_r$,
+ $BCCH_S = SR1\_BCCH\_CODE\_CHAN\_TD_r$,
+ $POTENTIAL\_CDMACH_S = SR1\_CDMA\_FREQ\_TD_r$

– Otherwise, if $SR1\_BCCH\_NON\_TD\_INCL_r$ is equal to '1', the mobile station shall set:

+ $BRAT_S = SR1\_BRAT\_NON\_TD_r$
+ $BCCH\_CODE\_RATE_S = SR1\_CRAT\_NON\_TD_r$,
+ $BCCH_S = SR1\_BCCH\_CODE\_CHAN\_NON\_TD_r$,
+ If $SR1\_NON\_TD\_FREQ\_INCL_r$ is equal to '1', $POTENTIAL\_CDMACH_S = SR1\_CDMA\_FREQ\_NON\_TD_r$; otherwise, $POTENTIAL\_CDMACH_S = EXT\_CDMA\_FREQ_r$

– Otherwise, the mobile station shall perform the following:

+ If the mobile station supports the Quick Paging Channel or any radio configuration in the Radio Configuration Class 2 or 3 (see 1.1.1), the mobile station shall set $POTENTIAL\_CDMACH_S = EXT\_CDMA\_FREQ_r$; otherwise, the mobile station shall set $POTENTIAL\_CDMACH_S = CDMA\_FREQ_r$.

If $POTENTIAL\_CDMACH_S$ is different from $CDMACH_S$, the mobile station shall set $CDMACH_S = POTENTIAL\_CDMACH_S$ and then tune to the CDMA Channel ($CDMACH_S$).

The mobile station shall enter the *Timing Change Substate*.

2.6.1.4 Timing Change Substate

Figure 2.6.1.4-1 illustrates the mobile station timing changes that occur in this substate. The mobile station synchronizes its long code timing and system timing to those of the CDMA system, using the $PILOT\_PN_S$, LC_STATE_S, and SYS_TIME_S values obtained from the received *Sync Channel Message*. SYS_TIME_S is equal to the System Time (see [2]) corresponding to 320 ms past the end of the last 80 ms superframe (see [2]) of the received *Sync Channel Message* minus the pilot PN sequence offset. LC_STATE_S is equal to the system long code state (see [2]) corresponding to SYS_TIME_S.

In the *Timing Change Substate*, the mobile station shall synchronize its long code timing to the CDMA system long code timing derived from LC_STATE_S, and synchronize its system timing to the CDMA system timing derived from SYS_TIME_S.

The mobile station shall perform the following:

- If $SR1\_BCCH\_NON\_TD\_INCL_S$ is equal to '1', or if $SR1\_TD\_INCL_S$ is equal to '1' and the mobile supports the transmit diversity mode specified by $SR1\_TD\_MODE_S$, or if the mobile station supports Spreading Rate 3 on the common channel and $SR3\_INCL_S$ is equal to '1', the mobile station shall:

- Set the stored message sequence numbers $CONFIG\_MSG\_SEQ_S$, $A41\_SYS\_PAR\_MSG\_SEQ_S$, $ACC\_MSG\_SEQ_S$, $MC\_RR\_PAR\_MSG\_SEQ_S$, $UNI\_NGHBR\_LST\_MSG\_SEQ_S$, $EXT\_GLOB\_SERV\_REDIR\_MSG\_SEQ_S$, $EXT\_CHAN\_LST\_MSG\_SEQ_S$, $FD\_CHAN\_LST\_MSG\_SEQ_S$, $USER\_ZONE\_ID\_MSG\_SEQ_S$ and $PRI\_NGHBR\_LST\_MSG\_SEQ_S$ variables to NULL (see 2.6.2.2);
- Set the index number of the Primary Broadcast Control Channel (BCN) to 1;
- Set $IMSI\_11\_12_S$, $IMSI\_10_S$ and MCC_S to NULL;
- Perform registration initialization as specified in 2.6.5.5.1.3; and
- If the bits of $TMSI\_CODE_{S\text{-}p}$ are not all equal to '1' and if SYS_TIME_S exceeds $TMSI\_EXP\_TIME_{S\text{-}p} \times 2^{12}$, the mobile station shall set all the bits of $TMSI\_CODE_{S\text{-}p}$ to '1'.

• Otherwise, the mobile station shall:

- Set $PAGECH_S$ to the Primary Paging Channel (see [2]);
- Set $PAGE\_CHAN_S$ to '1';
- Set the stored message sequence numbers $CONFIG\_MSG\_SEQ_S$, $SYS\_PAR\_MSG\_SEQ_S$, $ACC\_MSG\_SEQ_S$, $NGHBR\_LST\_MSG\_SEQ_S$, $GEN\_NGHBR\_LST\_MSG\_SEQ_S$, $EXT\_NGHBR\_LST\_MSG\_SEQ_S$, $CHAN\_LST\_MSG\_SEQ_S$, $EXT\_SYS\_PAR\_MSG\_SEQ_S$, $GLOB\_SERV\_REDIR\_MSG\_SEQ_S$, $EXT\_GLOB\_SERV\_REDIR\_MSG\_SEQ_S$, $EXT\_CHAN\_LST\_MSG\_SEQ_S$, $FD\_CHAN\_LST\_MSG\_SEQ_S$, $USER\_ZONE\_ID\_MSG\_SEQ_S$ and $PRI\_NGHBR\_LST\_MSG\_SEQ_S$ variables to NULL (see 2.6.2.2);
- Set $IMSI\_11\_12_S$, $IMSI\_10_S$ and MCC_S to NULL;
- Perform registration initialization as specified in 2.6.5.5.1.3; and
- If the bits of $TMSI\_CODE_{S\text{-}p}$ are not all equal to '1' and if SYS_TIME_S exceeds $TMSI\_EXP\_TIME_{S\text{-}p} \times 2^{12}$, the mobile station shall set all the bits of $TMSI\_CODE_{S\text{-}p}$ to '1'.

The mobile station shall enter the *Mobile Station Idle State*.

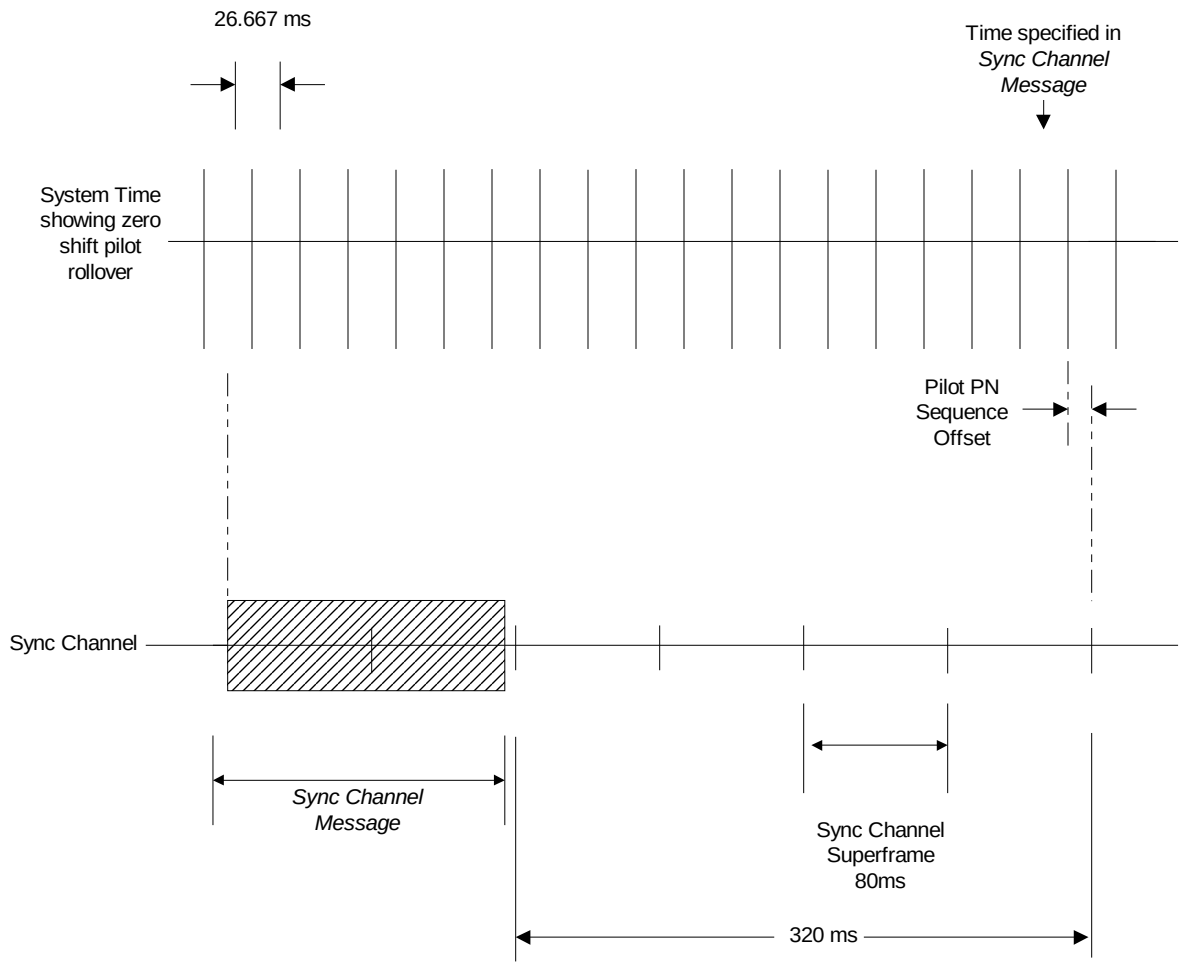

Figure 2.6.1.4-1. Mobile Station Internal Timing

2.6.2 Mobile Station Idle State

In this state, the mobile station monitors the Paging Channel or the Quick Paging Channel or Forward Common Control Channel/Primary Broadcast Control Channel. The mobile station can receive messages, receive an incoming call (mobile station terminated call), initiate a call (mobile station originated call), cancel a PACA call, initiate a registration, or initiate a message transmission.

The mobile station may monitor the Quick Paging Channel to determine if it should receive messages from the Paging Channel or Forward Common Control Channel.

Upon entering the *Mobile Station Idle State*, the mobile station shall perform the following if RSC_MODE_ENABLED is equal to NO:

- Set $SLOTTED_S$ to YES if $T\_SLOTTED_S$ is equal to 0 or if the mobile station does not support the slotted timer; otherwise, enable the $T_{MS\_Slotted}$ timer with the duration specified by $T\_SLOTTED_S$ if it is not already enabled, and set $SLOTTED_S$ to NO.

Upon entering the *Mobile Station Idle State* from the *Mobile Station Initialization State*, the mobile station shall perform the following:

- If $SR1\_BCCH\_NON\_TD\_INCL_S$ is equal to '1', or if $SR1\_TD\_INCL_S$ is equal to '1' and the mobile station supports the transmit diversity mode specified by $SR1\_TD\_MODE_S$, or if the mobile station supports Spreading Rate 3 on the common channel and $SR3\_INCL_S$ is equal to '1', the mobile station shall perform the following:
  - Set its Primary Broadcast Control Channel code channel to $BCCH_S$,
  - Set the Primary Broadcast Control Channel data rate as determined by $BRAT_S$,
  - Set the Primary Broadcast Control Channel code rate as determined by $BCCH\_CODE\_RATE_S$, and
  - Perform common channel supervision as specified in 2.6.2.1.1.4.
- Otherwise, the mobile station shall perform the following:
  - Set its code channel to $PAGECH_S$,
  - Set the Paging Channel data rate as determined by $PRAT_S$, and
  - Perform Paging Channel supervision as specified in 2.6.2.1.1.4.

Upon entering the *Mobile Station Idle State* from the *Mobile Station Control on the Traffic Channel State*, the mobile station shall perform all of the following:

- Perform common channel supervision as specified in 2.6.2.1.1.4.

If $REDIRECTION_S$, $PACA_S$, and $NDSS\_ORIG_S$ are equal to disabled, the mobile station may exit the *Mobile Station Idle State* at any time and enter the *System Determination Substate* of the *Mobile Station Initialization State* with a reselection indication (see 2.6.1.1).

While in the *Mobile Station Idle State*, the mobile station shall perform the following procedures:

- The mobile station shall perform Paging Channel or Forward Common Control Channel monitoring procedures as specified in 2.6.2.1.1.
- The mobile station shall perform message acknowledgment procedures as specified in [4].
- The mobile station shall perform registration procedures as specified in 2.6.2.1.3.
- The mobile station shall perform idle handoff procedures as specified in 2.6.2.1.4.
- The mobile station shall perform system reselection procedures as specified in 2.6.2.1.6.
- The mobile station shall perform the *Response to Overhead Information Operation* as specified in 2.6.2.2 whenever the mobile station receives a system overhead message *(ANSI-41 System Parameters Message, Enhanced Access Parameters Message, Extended CDMA Channel List Message, MC-RR Parameters Message, Universal Neighbor List Message, ANSI-41 RAND Message, System Parameters Message, Access Point Identification Message, Access Point Identification Text Message,CDMA Channel List Message, Extended System Parameters Message, Neighbor List Message, Extended Neighbor List Message, General Neighbor List Message, Access Point Pilot Information Message, Global Service Redirection Message, Extended Global Service Redirection Message, User Zone Identification Message, Private Neighbor List Message, Access Parameters Message General Overhead Information Message, Flex Duplex CDMA Channel List Message or Alternative Technologies Information Message).*
- The mobile station shall perform the *Mobile Station Page Match Operation* as specified in 2.6.2.3 whenever it receives a mobile station-directed page.
- The mobile station shall perform the *Mobile Station Order and Message Processing Operation* as specified in 2.6.2.4 whenever a message or order directed to the mobile station is received other than a mobile station-directed page.
- The mobile station shall set $NDSS\_ORIG_S$ to disabled if directed by the user to cancel the call origination.
- The mobile station shall perform the *Mobile Station Origination Operation* as specified in 2.6.2.5 if directed by the user to initiate a call, or if $NDSS\_ORIG_S$ is equal to enabled.
- If $RETRY\_DELAY_S[001]$ or $RETRY\_DELAY_S[101]$ is not set to 0:
  - The mobile station shall not send any *Origination Message* containing a packet data service option[1] or *Reconnect Message* (with ORIG_IND set to '1') for connecting a packet data service option until the maximum of the system time stored in $RETRY\_DELAY_S[001]$ and $RETRY\_DELAY_S[101]$.

[1] Packet data service option refers to SO 60, SO 61 or any service option in Service Option Group 4 and 5 in [30]

- At the system time stored in $RETRY\_DELAY_S[001]$, the mobile station shall reset $RETRY\_DELAY_S[001]$ to 0.
- At the system time stored in $RETRY\_DELAY_S[101]$, the mobile station shall reset $RETRY\_DELAY_S[101]$ to 0.

- The mobile station shall perform the *Mobile Station PACA Cancel Operation* as specified in 2.6.2.8, if $PACA_S$ is equal to enabled and any one of the following conditions is met:
  - PACA_CANCEL is equal to '1'; or
  - The mobile station is directed by the user to cancel the PACA call.
- If the PACA state timer expires, the mobile station shall perform the following:
  - The mobile station should enter the *Update Overhead Information Substate* of the *System Access State* (see 2.6.3) with an origination indication within T_{33m} seconds to re-originate the PACA call.
  - Otherwise, the mobile station shall perform the *Mobile Station PACA Cancel Operation* as specified in 2.6.2.8.
- If the mobile station supports *Data Burst Message* transmission, it shall perform the *Mobile Station Message Transmission Operation* as specified in 2.6.2.6 if directed by the user to transmit a message.
- If the mobile station supports BCMC operation, it shall perform the procedures as specified in 2.6.13.
- If $RETRY\_DELAY_S[100]$ or $RETRY\_DELAY_S[101]$ is not set to 0:
  - The mobile station shall not send any Short Data Burst (see [30], [42]) until the maximum of the system time stored in $RETRY\_DELAY_S[100]$ and $RETRY\_DELAY_S[101]$.
  - At the system time stored in $RETRY\_DELAY_S[100]$, the mobile station shall reset $RETRY\_DELAY_S[100]$ to 0.
  - At the system time stored in $RETRY\_DELAY_S[101]$, the mobile station shall reset $RETRY\_DELAY_S[101]$ to 0.
- If the mobile station supports the *Device Information Message* on the r-csch, $AUTO\_MSG\_SUPPORTED_S$ is equal to '1', and the mobile station has detected a change in hook status since the last time when the mobile station sent hook status information, the mobile station shall perform the following:
  - If the autonomous message timer has expired or is disabled, the mobile station shall perform the *Mobile Station Message Transmission Operation* as specified in 2.6.2.6.
  - If the autonomous message timer has not expired, the mobile station shall set the autonomous message timer equal to $AUTO\_MSG\_INTERVAL_S$ and shall restart the timer.

- If the mobile station supports the *Fast Call Setup Order* with ORDQ equal to '00000000' on the r-csch, $AUTO\_FCSO\_ALLOWED_S$ is equal to '1', RSC_MODE_ENABLED is equal to NO, $SLOTTED_S$ is equal to YES, and the mobile station would like to request operation in reduced slot cycle mode, it shall perform the *Mobile Station Message Transmission Operation* as specified in 2.6.2.6.
- The mobile station shall perform the *Mobile Station Power-Down Operation* as specified in 2.6.2.7 if directed by the user to power down.
- If the bits of $TMSI\_CODE_{s\text{-}p}$ are not all equal to '1' and if System Time (in 80 ms units) exceeds $TMSI\_EXP\_TIME_{s\text{-}p} \times 2^{12}$, the mobile station shall set all the bits of $TMSI\_CODE_{s\text{-}p}$ to '1' within T_{66m} seconds.
- If the full-TMSI timer expires or has expired, the mobile station shall set all the bits of $TMSI\_CODE_{s\text{-}p}$ to '1'. The mobile station shall update the registration variables as described in 2.6.5.5.2.5.
- If the key setup timer expires or has expired and mobile station determines that it is not originating an emergency call, the mobile station may set REG_SECURITY_RESYNC[2] to YES and go to the *System Determination Substate* with an encryption/message integrity failure indication (see 2.3.12.5 for details).
- If TKZ_MODE_ENABLED is set to YES, the mobile station shall perform the following:
  - If TKZ_ID_S is not equal to any entry in TKZ_LIST, TKZ_SID_S is equal to SID_S, TKZ_NID_S is equal to NID_S, and $TKZ\_MODE\_SUPPORTED_S$ is equal to '1', the mobile station shall send a *Radio Environment Message* by performing the *Mobile Station Message Transmission Operation* as specified in 2.6.2.6.
  - If the TKZ timer of any entry in TKZ_LIST has expired, the mobile station shall delete that entry.
  - If the tracking zone update timer expires, the mobile station shall disable the tracking zone update timer and set TKZ_MODE_ENABLED to NO.
- If $P\_REV\_IN\_USE_S$ is less than 11 after the mobile station performs an idle handoff, the mobile station shall set $TBR\_RAND\_SUPPR\_ENABLE_S$ to '0', and shall set $TBR\_RAND\_WINDOW_S$ to '11'.

2.6.2.1 Idle Procedures

2.6.2.1.1 Forward Channel Monitoring Procedures

2.6.2.1.1.1 General Overview

The Paging Channel is divided into 80 ms slots called Paging Channel slots. Paging and control messages for a mobile station operating in the non-slotted mode can be received in

[2] REG_SECURITY_RESYNC was formerly called REG_ENCRYPT_RESYNC.

any of the Paging Channel slots; therefore, the non-slotted mode of operation requires the mobile station to monitor all slots.

The Forward Common Control Channel is divided into 80 ms slots called Forward Common Control Channel slots. Paging and mobile directed messages for a mobile station operating in the non-slotted mode can be received in any of the Forward Common Control Channel slots. The overhead messages can be received on the Primary Broadcast Control Channel. Therefore, the non-slotted mode of operation requires the mobile station to continuously monitor the Forward Common Control Channel/Primary Broadcast Control Channel.

2.6.2.1.1.1.1 General Overview for Individually Addressed Messages

The Paging Channel or the Forward Common Control Channel protocol provides for scheduling the transmission of messages for a specific mobile station in certain assigned slots. Support of this feature is optional and may be enabled by each mobile station. A mobile station that monitors the Paging Channel or the Forward Common Control Channel only during certain assigned slots is referred to as operating in the slotted mode. During the slots in which the Paging Channel or the Forward Common Control Channel is not being monitored, the mobile station can stop or reduce its processing for power conservation. A mobile station may not operate in the slotted mode in any state except the *Mobile Station Idle State*.

A mobile station operating in the slotted mode generally monitors the Paging Channel or the Forward Common Control Channel for one or two slots per slot cycle. The mobile station can specify its preferred slot cycle using the SLOT_CYCLE_INDEX and SIGN_SLOT_CYCLE_INDEX fields in the *Registration Message*, *Origination Message*, or *Page Response Message*. The mobile station can also specify a reduced slot cycle using the RSCI field of the *Fast Call Setup Order*, *Release Order* (ORDQ = '00000011') or *Extended Release Response Message*, which enables the mobile station to operate in the reduced slot cycle mode. The length of the slot cycle, T, in units of 1.28 seconds,[3] is given by

$$T = 2^i,$$

where i is the selected slot cycle index (see 2.6.2.1.1.3) which can take the values -4, -3, -2, -1, 0, 1, 2, 3, 4, 5, 6, and 7.

Using the Terminal Information record of the *Status Response Message* or the *Extended Status Response Message*,

- if $P\_REV\_IN\_USE_S$ is less than eleven, the mobile station reports max (0, SLOT_CYCLE_INDEX_REG) with the SLOT_CYCLE_INDEX field.

[3] When SIGN_SLOT_CYCLE_INDEX is equal to '1', the minimum length slot cycle consists of 16 slots of 80 ms each, hence 1.28 seconds. When SIGN_SLOT_CYCLE_INDEX is equal to '0', the minimum length slot cycle consists of one slot of 80 ms, hence 80 ms. When operating in the reduced slot cycle mode, the minimum length slot cycle is also 80 ms.

- if $P\_REV\_IN\_USE_S$ is greater than or equal to eleven, the mobile station reports its last registered slot cycle, SLOT_CYCLE_INDEX_REG with the SLOT_CYCLE_INDEX and SIGN_SLOT_CYCLE_INDEX fields.

Using the Extended Terminal Information record of the *Extended Status Response Message* the mobile station reports its last registered slot cycle, SLOT_CYCLE_INDEX_REG with the SLOT_CYCLE_INDEX and SIGN_SLOT_CYCLE_INDEX fields.

When in the *Mobile Station Control on the Traffic Channel State*, using the Terminal Information record of the *Status Response Message* or the *Status Message*,

- if $P\_REV\_IN\_USE_S$ is less than eleven, the mobile station reports max (0, SLOT_CYCLE_INDEX_REG) with the SLOT_CYCLE_INDEX field.
- if $P\_REV\_IN\_USE_S$ is greater than or equal to eleven, the mobile station reports its last registered slot cycle, SLOT_CYCLE_INDEX_REG with the SLOT_CYCLE_INDEX and SIGN_SLOT_CYCLE_INDEX fields.

When in the *Mobile Station Control on the Traffic Channel State*, using the Extended Terminal Information record of the *Status Response Message*, the mobile station reports its last registered slot cycle, SLOT_CYCLE_INDEX_REG with the SLOT_CYCLE_INDEX and SIGN_SLOT_CYCLE_INDEX fields.

A mobile station operating in the slotted mode may optionally monitor additional slots to receive broadcast messages and/or broadcast pages (see 2.6.2.1.1.3.3 and 2.6.2.1.1.3.4).

There are $16 \times T$ slots in a slot cycle.

SLOT_NUM is the Paging Channel or the Forward Common Control Channel slot number, modulo the maximum length slot cycle (2048 slots). That is, the value of SLOT_NUM is

$$\text{SLOT\_NUM} = \lfloor t/4 \rfloor \bmod 2048,$$

where t is the System Time in 20ms frames. For each mobile station, the starting times of its slot cycles are offset from the slot in which SLOT_NUM equals zero by a fixed, randomly selected number of slots as specified in 2.6.2.1.1.3.

Figure 2.6.2.1.1.1-1 shows an example for a slot cycle length of 1.28 seconds, in which the computed value of PGSLOT (see 2.6.2.1.1.3) is equal to 6, so that one of the mobile station's slot cycles begins when SLOT_NUM equals 6. The mobile station begins monitoring the Paging Channel or the Forward Common Control Channel at the start of the slot in which SLOT_NUM equals 6. The next slot in which the mobile station must begin monitoring the Paging Channel or the Forward Common Control Channel is 16 slots later, i.e., the slot in which SLOT_NUM is 22.

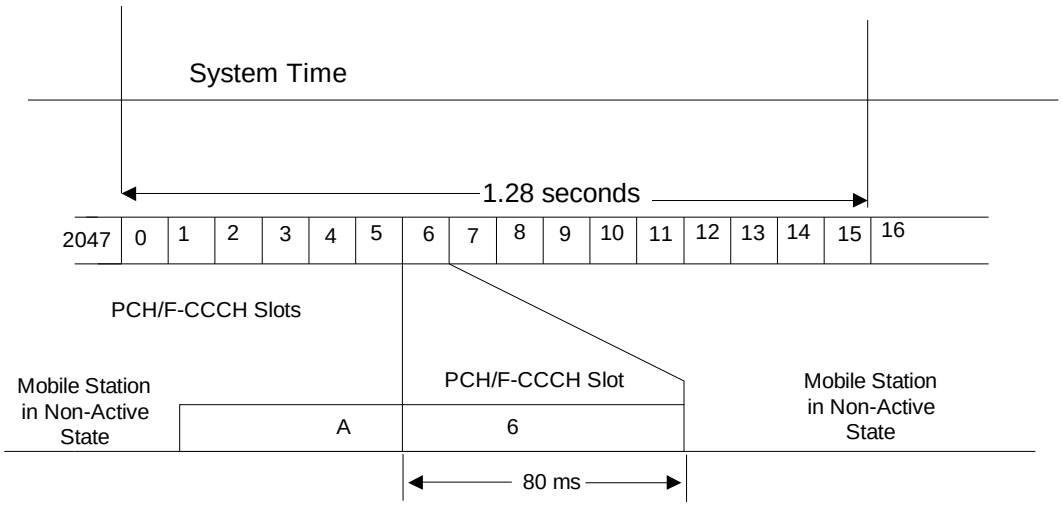

A - Reacquisition of CDMA System
6 - Mobile Station's Assigned PCH/F-CCCH Slot

Figure 2.6.2.1.1.1-1. Mobile Station Idle Slotted Mode Structure Example

2.6.2.1.1.1.1.1 Overview of Stopping Monitoring via the General Page Message

Layer 3 determines when a mobile station operating in the slotted mode may stop monitoring the Paging Channel or the Forward Common Control Channel based upon indications received from Layer 2 (see [4]). When the *General Page Message* is used, Layer 2 determines whether there is an address mismatch or a broadcast address mismatch, based upon the address information received in the *General Page Message*. Based upon the address mismatch and broadcast address mismatch indications received from Layer 2, Layer 3 can determine when no further messages or records addressed to an individual mobile station will be present in the slot.

A *General Page Message* contains four fields: CLASS_0_DONE, CLASS_1_DONE, TMSI_DONE, and ORDERED_TMSIS, which indicate when a mobile station operating in the slotted mode may stop monitoring the Paging Channel or the Forward Common Control Channel.

When CLASS_0_DONE is set to ‘1’ during a mobile station’s assigned slot and the mobile station is operating in the slotted mode, no further messages or records addressed by a class 0 IMSI will be directed to the mobile station during the current slot. When CLASS_1_DONE is set to ‘1’ during a mobile station’s assigned slot and the mobile station is operating in the slotted mode, no further messages or records addressed by a class 1 IMSI will be directed to the mobile station during the current slot. Similarly, when TMSI_DONE is set to ‘1’ during a mobile station’s assigned slot and the mobile station is operating in the slotted mode, no further messages or records addressed by a TMSI will be directed to the mobile station during the current slot.

The field ORDERED_TMSIS, when set to '1' during a mobile station's assigned slot, indicates that the base station has ordered TMSI page records directed to mobile stations operating in the slotted mode so that the resulting TMSI_CODE values are in ascending order in the *General Page Messages* in the slot.

A mobile station which is operating in the slotted mode, has a class 0 IMSI assigned, and does not have a TMSI assigned (all the bits of $TMSI\_CODE_{s-p}$ are equal to '1'), may stop monitoring the Paging Channel or the Forward Common Control Channel after processing a *General Page Message* containing CLASS_0_DONE equal to '1'. Similarly, a mobile station which is operating in the slotted mode, has a class 1 IMSI assigned, and does not have a TMSI assigned (all the bits of $TMSI\_CODE_{s-p}$ are equal to '1'), may stop monitoring the Paging Channel or the Forward Common Control Channel after processing a *General Page Message* containing CLASS_1_DONE equal to '1'.

A mobile station which is operating in the slotted mode, has a class 0 IMSI assigned, and has a TMSI assigned (the bits of $TMSI\_CODE_{s-p}$ are not all equal to '1'), may stop monitoring the Paging Channel or the Forward Common Control Channel after processing a *General Page Message* containing both CLASS_0_DONE equal to '1' and TMSI_DONE equal to '1'. Similarly, a mobile station which is operating in the slotted mode, has a class 1 IMSI assigned, and has a TMSI assigned (the bits of $TMSI\_CODE_{s-p}$ are not all equal to '1'), may stop monitoring the Paging Channel or the Forward Common Control Channel after processing a *General Page Message* containing both CLASS_1_DONE equal to '1' and TMSI_DONE equal to '1'.

If ORDERED_TMSIS is equal to '1' and CLASS_0_DONE is equal to '1', a mobile station which has a class 0 IMSI assigned, is operating in the slotted mode, and has a TMSI assigned (the bits of $TMSI\_CODE_{s-p}$ are not all equal to '1'), may stop monitoring the Paging Channel or the Forward Common Control Channel after processing a page record with a TMSI_CODE value of higher numerical value than $TMSI\_CODE_{s-p}$.

If ORDERED_TMSIS is equal to '1' and CLASS_1_DONE is equal to '1', a mobile station which has a class 1 IMSI assigned, is operating in the slotted mode, and has a TMSI assigned (the bits of $TMSI\_CODE_{s-p}$ are not all equal to '1'), may stop monitoring the Paging Channel or the Forward Common Control Channel after processing a page record with a TMSI_CODE value of higher numerical value than $TMSI\_CODE_{s-p}$.

The mobile station continues to monitor the Paging Channel or the Forward Common Control Channel for one additional slot unless, within its assigned slot, the mobile station receives a *General Page Message* containing the appropriate indicator permitting it to stop monitoring the Paging Channel or the Forward Common Control Channel (CLASS_0_DONE, CLASS_1_DONE, TMSI_DONE, or ORDERED_TMSIS equal to '1', whichever is appropriate). This allows the base station to carry over a message begun in the assigned slot into the following slot, if necessary.

2.6.2.1.1.1.1.2 Overview of Stopping Monitoring via the Universal Page Message

Layer 3 determines when a mobile station operating in the slotted mode may stop monitoring the Forward Common Control Channel based upon indications from Layer 2 (see [4]). When the *Universal Page Message* is used on the Forward Common Control Channel, Layer 2 determines whether there is an address mismatch or a broadcast address mismatch, based upon the address information received in the *Universal Page Message*. Based upon the address mismatch and broadcast address mismatch indications received from Layer 2, Layer 3 can determine when no further messages or records addressed to an individual mobile station will be present in the slot.

The *Universal Page Message* contains the READ_NEXT_SLOT field, which, when equal to '1' and received in an assigned slot, indicates to a mobile station that it is to monitor the Forward Common Control Channel in time to receive the first bit of the slot following the assigned slot. This allows the base station to use both an assigned slot and the following slot for pages if all of the pages for an assigned slot cannot be fit into the assigned slot. The *Universal Page Message* also contains the READ_NEXT_SLOT_BCAST field, which, when equal to '1' and received in an assigned slot or broadcast slot, indicates to a mobile station configured to receive broadcast messages that it is to monitor the Forward Common Control Channel in time to receive the first bit of the subsequent slot. This allows the base station to use the subsequent slot for enhanced broadcast pages if all of the enhanced broadcast pages for an assigned slot or broadcast slot cannot be fit into the slot.

2.6.2.1.1.1.2 Overview of Broadcast Messages on Paging Channel

The Paging Channel protocol provides two methods for the transmission of broadcast messages. Each method enables mobile stations operating in the slotted mode or in the non-slotted mode to receive broadcast messages. A broadcast message on the Paging Channel is a *Data Burst Message* that has a broadcast address type. A mobile station operating in the slotted mode has assigned slots that it monitors to receive Paging Channel messages (see 2.6.2.1.1.1). A broadcast page is a record within a *General Page Message* that has a broadcast address type. A base station may transmit a broadcast page in an assigned slot to inform mobile stations monitoring that slot that a broadcast message will be transmitted in a predetermined subsequent slot. A slot that a mobile station monitors in order to receive either a broadcast page or a broadcast message is referred to as a broadcast slot.

2.6.2.1.1.1.2.1 Method 1: Multi-Slot Broadcast Message Transmission

According to this method, a broadcast message is sent in a sufficient number of assigned slots such that it may be received by all mobile stations that are operating in the slotted mode.

Figure 2.6.2.1.1.1.2.1-1 shows an example for the case when the maximum slot cycle index is equal to 0. In this example, the broadcast message fits in a single slot. The *Data Burst Message* is transmitted in 16 consecutive slots.

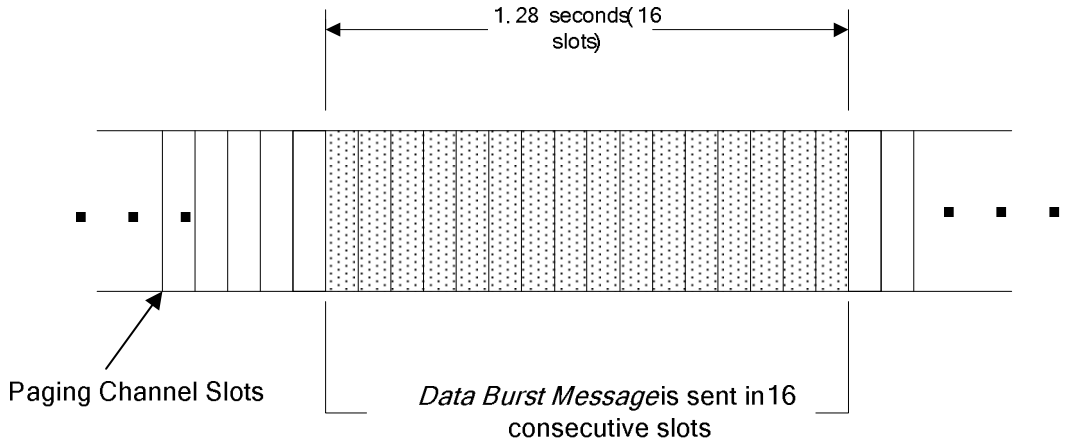

Figure 2.6.2.1.1.1.2.1-1. Multi-Slot Broadcast Message Transmission Example

2.6.2.1.1.1.2.2 Method 2: Periodic Broadcast Paging

According to this method, mobile stations configured to receive broadcast messages monitor a specific broadcast slot (the first slot of a broadcast paging cycle; see 2.6.2.1.1.3.3). There are two methods of sending broadcast messages used with Periodic Broadcast Paging.

If all of the broadcast messages to be transmitted fit within the first slot of a broadcast paging cycle, they may all be transmitted in this broadcast slot. If there is a single broadcast message to be transmitted, it may be transmitted beginning in this broadcast slot.

Alternately, one or more broadcast pages may be transmitted in the first slot of a broadcast paging cycle. Each broadcast page is associated with a subsequent broadcast slot. For each broadcast page, an associated broadcast message may be transmitted in the associated subsequent broadcast slot. The broadcast slot for the associated broadcast message is determined according to the position of the broadcast page within the *General Page Message* transmitted in the first slot of the broadcast paging cycle.

Figure 2.6.2.1.1.1.2.2-1 shows an example of Periodic Broadcast Paging when the broadcast index is set to 1. A *General Page Message* containing three broadcast pages is transmitted in the first slot of the broadcast paging cycle. For each of the three broadcast pages, a *Data Burst Message* is transmitted in a subsequent slot.

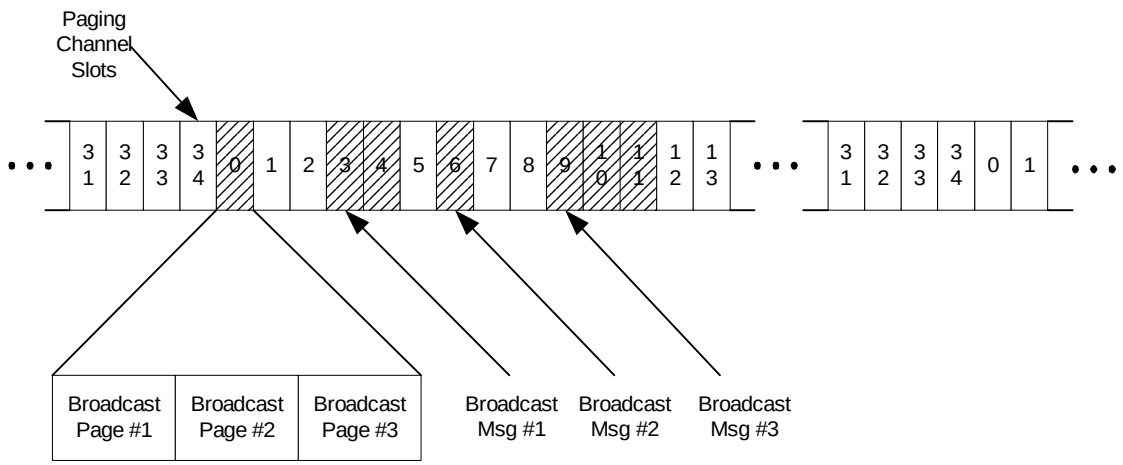

Figure 2.6.2.1.1.1.2.2-1. Periodic Broadcast Paging Example

2.6.2.1.1.1.3 Overview of Broadcast Messages on Broadcast Control Channel

The Broadcast Control Channel/Forward Common Control Channel protocol provides two methods for the transmission of broadcast messages. Each method enables mobile stations operating in the slotted mode or in the non-slotted mode to receive broadcast messages on the Broadcast Control Channel when $NUM\_BCCH\_BCAST_S$ is not equal to '000'. A broadcast message on the Broadcast Control Channel is a *Data Burst Message* that has a broadcast address type. A mobile station operating in the slotted mode has assigned Forward Common Control Channel slots that it monitors to receive Forward Common Control Channel messages (see 2.6.2.1.1.1). A mobile station operating in the slotted mode and configured to receive broadcast messages may also have special assigned Forward Common Control Channel slots, called broadcast slots, that it monitors to receive enhanced broadcast pages. An enhanced broadcast page is a record within a *General Page Message* or a *Universal Page Message* that has a broadcast address type and that includes broadcast message scheduling information. A base station may transmit an enhanced broadcast page in an assigned Forward Common Control Channel slot, or in a broadcast slot, to inform mobile stations that a broadcast message will be transmitted in a specified Broadcast Control Channel slot. The enhanced broadcast page identifies the Broadcast Control Channel and the slot the mobile station is to monitor to receive the broadcast message.

2.6.2.1.1.1.3.1 Method 1: Multi-Slot Enhanced Broadcast Paging

According to this method, an enhanced broadcast page is sent in a sufficient number of assigned slots on the Forward Common Control Channel such that it may be received by all mobile stations that are operating in the slotted mode.

Figure 2.6.2.1.1.1.3.1-1 shows an example for the case when the maximum slot cycle index is equal to 0. The enhanced broadcast page is transmitted in 16 consecutive slots.

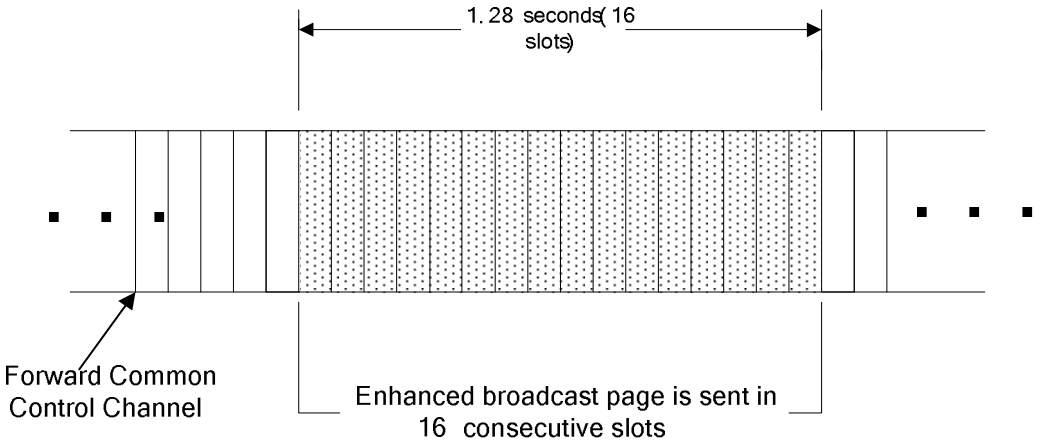

Figure 2.6.2.1.1.1.3.1-1. Multi-Slot Enhanced Broadcast Paging Example

2.6.2.1.1.1.3.2 Method 2: Periodic Enhanced Broadcast Paging

According to this method, mobile stations configured to receive broadcast messages monitor a specific broadcast slot (the first slot of a broadcast paging cycle).

One or more enhanced broadcast pages may be transmitted in the first slot of a broadcast paging cycle and/or in the subsequent slot. Each enhanced broadcast page is associated with a subsequent broadcast slot. The broadcast slot for the associated broadcast message is determined according to a time offset specified in the enhanced broadcast page. In addition, a broadcast slot for a repeat of the broadcast message can be specified via a time offset from the slot of the first broadcast message.

2.6.2.1.1.1.4 Overview of Broadcast Messages on Forward Common Control Channel

The Forward Common Control Channel protocol provides two methods for the transmission of broadcast messages. Each method enables mobile stations operating in the slotted mode or in the non-slotted mode to receive broadcast messages on the Forward Common Control Channel when $NUM\_BCCH\_BCAST_S$ equals '000'. A broadcast message on the Forward Common Control Channel is a *Data Burst Message* that has a broadcast address type. A mobile station operating in the slotted mode has assigned Forward Common Control Channel slots that it monitors to receive Forward Common Control Channel messages (see 2.6.2.1.1.1). An enhanced broadcast page is a record within a *General Page Message* or a *Universal Page Message* that has a broadcast address type. A base station may transmit an enhanced broadcast page in an assigned slot to inform mobile stations monitoring that slot that a broadcast message will be transmitted in the same F-CCCH where the enhanced broadcast page is received. A slot that a mobile station monitors in order to receive either an enhanced broadcast page or a broadcast message is referred to as a broadcast slot.

2.6.2.1.1.1.4.1 Method 1: Multi-Slot Broadcast Message Transmission

According to this method, a broadcast message is sent in a sufficient number of assigned slots on the Forward Common Control Channel such that it may be received by all mobile stations that are operating in the slotted mode.

Figure 2.6.2.1.1.1.4.1-1 shows an example for the case when the maximum slot cycle index is equal to 0. In this example, the broadcast message fits in a single slot. The *Data Burst Message* is transmitted in 16 consecutive slots.

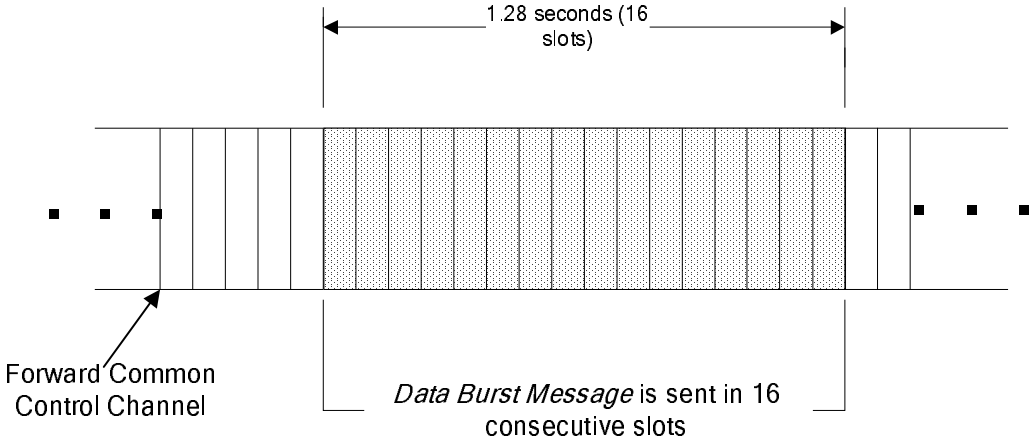

Figure 2.6.2.1.1.1.4.1-1. Multi-Slot Broadcast Message Transmission Example

2.6.2.1.1.1.4.2 Method 2: Periodic Enhanced Broadcast Paging

According to this method, mobile stations configured to receive broadcast messages monitor a specific broadcast slot (the first slot of a broadcast paging cycle). There are two methods of sending broadcast messages used with Periodic Enhanced Broadcast Paging.

If all of the broadcast messages to be transmitted fit within the first slot of a broadcast paging cycle, they may all be transmitted in this broadcast slot. If there is a single broadcast message to be transmitted, it may be transmitted beginning in this broadcast slot.

Alternately, one or more enhanced broadcast pages may be transmitted in the first slot of a broadcast paging cycle. Each enhanced broadcast page is associated with a subsequent broadcast slot. For each enhanced broadcast page, an associated broadcast message may be transmitted in the associated subsequent broadcast slot. The broadcast slot for the associated broadcast message is determined according to a time offset specified in the enhanced broadcast page. In addition, a broadcast slot for a repeat of the broadcast message can be specified via a time offset from the slot of the first broadcast message.

2.6.2.1.1.2 Non-Slotted Mode Requirements

A mobile station operating in the non-slotted mode shall monitor the Paging Channel or the Forward Common Control Channel/Primary Broadcast Control Channel at all times. If the mobile station declares a loss of the Paging Channel or the Forward Common Control

Channel/Primary Broadcast Control Channel (see 2.6.2.1.1.4), the mobile station shall enter the *System Determination Substate* of the *Mobile Station Initialization State* with a system lost indication (see 2.6.1.1).

When a mobile station monitors the Paging Channel or the Forward Common Control Channel in any state other than the *Mobile Station Idle State*, it shall operate in the non-slotted mode.

A mobile station monitoring the Paging Channel shall operate in the non-slotted mode when $PACA_S$ is equal to enabled.

A mobile station monitoring the Paging Channel shall operate in the non-slotted mode when $SLOTTED_S$ is equal to NO.

2.6.2.1.1.3 Slotted Mode Requirements

A mobile station monitoring the Paging Channel shall not operate in the slotted mode if any of the following conditions are true:

- $SLOTTED_S$ is equal to NO,
- Bit 5 of the station class mark is set to '0' (see 2.3.3),
- $PACA_S$ is equal to enabled, or
- The mobile station's configuration parameters are not current (see 2.6.2.2).

A mobile station monitoring the Forward Common Control Channel shall not operate in the slotted mode if either of the following conditions is true:

- Bit 5 of the station class mark is set to '0' (see 2.3.3), or
- The mobile station's configuration parameters are not current (see 2.6.2.2).

A mobile station monitoring the Forward Common Control Channel with bit 5 of the station class mark set to '1' shall monitor all Forward Common Control Channel slots (see 2.6.2.1.1.3.1) if either of the following conditions is true:

- $SLOTTED_S$ is equal to NO, or
- $PACA_S$ is equal to enabled.

During operation in the slotted mode, the mobile station shall ensure that its stored configuration parameter values are current (see 2.6.2.2).

If the mobile station declares a loss of the Paging Channel or the Forward Common Control Channel/Primary Broadcast Control Channel (see 2.6.2.1.1.4), the mobile station shall enter the *System Determination Substate* of the *Mobile Station Initialization State* with a system lost indication (see 2.6.1.1).

2.6.2.1.1.3.1 Monitoring Assigned Slots

The mobile station shall monitor the Paging Channel or the Forward Common Control Channel in each of its assigned slots, if any of the following conditions is true:

- The mobile station does not support Quick Paging Channel operation, or

- $QPCH\_SUPPORTED_S$ is equal to '0', or
- RSC_MODE_ENABLED is equal to YES, $IGNORE\_QPCH_S$ is equal to '1', and $RSCI_S$ is equal to -3 or -4.

If none of the above conditions is true, then for each of its assigned slots, the mobile station shall perform the following:

- The mobile station should check its assigned paging indicators in the complete Quick Paging Channel slot immediately preceding its assigned Paging Channel or Forward Common Control Channel slot, as specified in 2.6.2.1.2.1; the mobile station shall monitor the assigned Paging Channel or Forward Common Control Channel slot if the paging indicators meet the conditions specified in 2.6.2.1.2.2.
- If the mobile station does not check its assigned paging indicators, the mobile station shall monitor its assigned Paging Channel or Forward Common Control Channel slot.

If the mobile station supports Quick Paging Channel operation, the mobile station is configured to receive broadcast messages, $BCAST\_INDEX_S$ is not equal to '000', and $QPCH\_BI\_SUPPORTED_S$ equals '1', then for each of its assigned broadcast slots on the Forward Common Control Channel or Paging Channel, the mobile station shall perform the following:

- The mobile station should check the broadcast indicators in the complete Quick Paging Channel broadcast slot immediately preceding its assigned broadcast slot, as specified in 2.6.2.1.1.3.3.
- The mobile station should receive its assigned broadcast slot on the Forward Common Control Channel or Paging Channel if the broadcast indicators meet the conditions specified in 2.6.2.1.2.1.

The mobile station shall monitor each slot following an assigned slot in which the mobile station received a *Universal Page Message* with READ_NEXT_SLOT equal to '1', and shall begin monitoring the Forward Common Control Channel in time to receive the first bit of the slot. If the mobile station is configured to receive broadcast messages, it shall monitor each slot following an assigned slot in which the mobile station received a *Universal Page Message* with READ_NEXT_SLOT_BCAST equal to '1', and shall begin monitoring the Forward Common Control Channel in time to receive the first bit of the slot.

If $SLOTTED_S$ is equal to NO or $PACA_S$ is equal to enabled, the mobile station may stop monitoring a Forward Common Control Channel slot when Layer 3 receives an address mismatch indication from Layer 2. When the mobile station stops monitoring a Forward Common Control Channel slot when $SLOTTED_S$ is equal to NO or $PACA_S$ is equal to enabled, the mobile station shall begin monitoring the subsequent Forward Common Control Channel slot in time to receive the first bit of the slot.

If the mobile station monitors a Paging Channel or Forward Common Control Channel slot, it shall begin monitoring the Paging Channel or the Forward Common Control Channel in time to receive the first bit of the slot. If the mobile station is not configured to receive broadcast addresses, the mobile station shall continue to monitor the Paging Channel or the Forward Common Control Channel until one of the following conditions is satisfied:

- Layer 3 receives an address mismatch indication from Layer 2 (see [4]); or
- The mobile station monitors the assigned slot and the slot following the assigned slot, and the mobile station receives at least one valid message (see [4]).

If the mobile station is configured to receive broadcast addresses and the mobile station is monitoring a Paging Channel, the mobile station shall continue to monitor the Paging Channel until one of the preceding conditions is satisfied and should monitor the Paging Channel until Layer 3 receives a broadcast address mismatch indication from Layer 2 (see [4]).

If the mobile station is configured to receive broadcast addresses and the mobile station is monitoring a Forward Common Control Channel, the mobile station shall continue to monitor the Forward Common Control Channel until one of the preceding conditions is satisfied and should monitor the Forward Common Control Channel until Layer 3 receives a broadcast address mismatch indication from Layer 2 (see [4]).

The mobile station shall monitor each slot following a broadcast slot in which the mobile station received a *Universal Page Message* with READ_NEXT_SLOT_BCAST equal to '1', and shall begin monitoring the Forward Common Control Channel in time to receive the first bit of the slot.

For each broadcast slot monitored to receive broadcast pages or broadcast messages that is not one of its assigned slots, the mobile station should begin monitoring the Paging Channel or the Forward Common Control Channel in the first bit of the broadcast slot. The mobile station should continue to monitor the Paging Channel or the Forward Common Control Channel until one of the following conditions is satisfied:

- Layer 3 receives a broadcast address mismatch indication from Layer 2; or
- The mobile station monitors the Paging Channel or the Forward Common Control Channel to receive all messages beginning in the broadcast slot and in the slot following the broadcast slot, and the mobile station receives at least one valid message (see [4]).

To determine its assigned slots, the mobile station shall use the hash function specified in 2.6.7.1 to select a number, PGSLOT, in the range 0 to 2047 (spanning the maximum slot cycle length, which is 163.84 seconds). The mobile station's assigned slots shall be those slots in which

$$(\lfloor t/4 \rfloor - \mathrm{PGSLOT}) \bmod (16 \times T) = 0,$$

where t is the System Time in 20ms frames and T is the slot cycle length in units of 1.28 seconds given by

$$T = 2^i,$$

where i is the slot cycle index which can take the values -4, -3, -2, -1, 0, 1, 2, 3, 4, 5, 6, and 7.

For each slot on the Broadcast Control Channel monitored to receive broadcast messages, the mobile station should begin monitoring the Broadcast Control Channel in the first bit of the slot. The mobile station should continue to monitor the Broadcast Control Channel

until one of the following conditions is satisfied:

- The mobile station has monitored all frames of a Broadcast Control Channel slot and the frame quality for all of the frames of the slot was insufficient; or
- The mobile station monitors the Broadcast Control Channel slot specified by the enhanced broadcast page and the slot did not contain an SCI bit set to '1' (see [4]).
- The mobile station has received a broadcast *Data Burst Message* having the same BURST_TYPE and broadcast address as the enhanced broadcast page which announced the *Data Burst Message*.

2.6.2.1.1.3.2 Determination of the Slot Cycle Index

When the SID and NID of the current base station (SID_S and NID_S, as stored from the *System Parameters Message* or *ANSI-41 System Parameters Message*) do not match any entry of $SID\_NID\_LIST_S$, the mobile station shall use a slot cycle index no greater than the smaller of $MAX\_SLOT\_CYCLE\_INDEX_S$ and 1; otherwise:

- If RSC_MODE_ENABLED is equal to YES, the mobile station shall use a slot cycle index no greater than $\min(RSCI_S, SLOT\_CYCLE\_INDEX_S)$.
- Otherwise, the mobile station shall use a slot cycle index no greater than $SLOT\_CYCLE\_INDEX_S$ (see 2.6.2.2.1.6).

If the mobile station is directed by the user to modify the preferred slot cycle index ($SLOT\_CYCLE\_INDEX_p$), the mobile station shall perform parameter-change registration (see 2.6.5.1.6).

2.6.2.1.1.3.3 Slot Cycles for Broadcast Message Transmission

2.6.2.1.1.3.3.1 Slot Cycles for Broadcast Message Transmission on the Paging Channel

Distribution of broadcast messages relies on specially defined Paging Channel slot cycles. The definitions are as follows:

Maximum paging cycle: On the Paging Channel, a maximum paging cycle is a Paging Channel slot cycle (see 2.6.2.1.1.3.1) having a duration of M slots such that:

$$M = 2^i \times 16,\ 0 \le i \le 7$$

where $i = MAX\_SLOT\_CYCLE\_INDEX_S$ as received in the *System Parameters Message*.

The first slot of each maximum paging cycle is any Paging Channel slot in which

$$\lfloor t/4 \rfloor \bmod M = 0,$$

where t represents system time in 20ms frames.

Broadcast paging cycle: On the Paging Channel, a broadcast paging cycle is a Paging Channel slot cycle (see 2.6.2.1.1.3.1) having a duration of B + 3 slots where:

$$B = 2^i \times 16,\ 1 \le i \le 7$$

where i = $BCAST\_INDEX_S$ as received in the *Extended System Parameters Message*, or set by default when the *Extended System Parameters Message* is not sent.

The first slot of each broadcast paging cycle is any Paging Channel slot in which

$$\lfloor t/4 \rfloor \bmod (B + 3) = 0,$$

where t represents system time in 20ms frames.

2.6.2.1.1.3.3.2 Slot Cycles for Broadcast Message Transmission on the Forward Common Control Channel

Distribution of broadcast messages relies on specially defined Forward Common Control Channel slot cycles. The definitions are as follows:

Maximum paging cycle: On the Forward Common Control Channel, a maximum paging cycle is a Forward Common Channel slot cycle (see 2.6.2.1.1.3.1) having a duration of M slots such that:

$$M = 2^i \times 16,\ 0 \le i \le 7$$

where i = $MAX\_SLOT\_CYCLE\_INDEX_S$ as received in the *MC-RR Parameters Message*.

The first slot of each maximum paging cycle is any Forward Common Control Channel slot in which

$$\lfloor t/4 \rfloor \bmod M = 0,$$

where t represents system time in 20ms frames.

Broadcast paging cycle: On the Forward Common Control Channel, a broadcast paging cycle is a Forward Common Control Channel slot cycle (see 2.6.2.1.1.3.1) having a duration of B + 7 slots where:

$$B = 2^{1+i} \times 16,\ 1 \le i \le 7$$

where i = $BCAST\_INDEX_S$ as received in the *MC-RR Parameters Message*.

The first slot of each broadcast paging cycle is any Forward Common Control Channel slot in which

$$\lfloor t/4 \rfloor \bmod (B + 7) = 0,$$

where t represents system time in 20ms frames.

2.6.2.1.1.3.4 Monitoring Paging Channel Broadcasts

The following requirements apply to mobile stations monitoring the Paging Channel and supporting the reception of broadcast messages.

If $BCAST\_INDEX_S$ is equal to '000', the mobile station shall monitor only its assigned Paging Channel slots (see 2.6.2.1.1.3.1).

If $BCAST\_INDEX_S$ is not equal to '000', and the mobile station is configured to receive messages addressed to broadcast addresses, the mobile station should also monitor the Paging Channel beginning with the first slot of each broadcast paging cycle (see 2.6.2.1.1.3.3).

If the mobile station receives a broadcast page containing a burst type and broadcast address for a *Data Burst Message* that the mobile station has been configured to receive (see 2.6.2.3), the mobile station should monitor the slot in which the corresponding broadcast Paging Channel message will be sent, determined as follows:

- The mobile station shall consider a broadcast page to have been received in the paging slot in which the *General Page Message* containing the broadcast page began.
- If $BCAST\_INDEX_S$ is not equal to '000', the paging slot containing the broadcast page is defined as the reference slot.
- Let n represent the ordinal number of the broadcast page relative to other broadcast pages that are contained in the same *General Page Message* (n = 1, 2, 3,...). The mobile station should monitor the Paging Channel slot that occurs $n \times 3$ paging slots after the reference slot.

After receiving a broadcast message or a broadcast page for a *Data Burst Message* and a corresponding broadcast Paging Channel message when $BCAST\_INDEX_S$ is not equal to '000', the mobile station should discard all further broadcast pages and all further broadcast Paging Channel messages containing the same BURST_TYPE and BC_ADDR fields that are received within $4 \times (B + 3)$ paging slots of the first paging slot in the broadcast paging cycle in which the broadcast page or broadcast message was first received. (B + 3 is the duration of the broadcast paging cycle as defined in 2.6.2.1.1.3.3).

After receiving a broadcast message or a broadcast page for a *Data Burst Message* and a corresponding broadcast Paging Channel message when $BCAST\_INDEX_S$ is equal to '000', the mobile station should discard all further broadcast pages and all further broadcast Paging Channel messages containing the same BURST_TYPE and BC_ADDR fields that are received within $16 \times 2^{MAX\_SLOT\_CYLCE\_INDEX_s}$ slots of the paging slot in which the broadcast page or broadcast message was first received.

If the mobile station receives a broadcast page containing a burst type and broadcast address for BCMC that the mobile station has been configured to receive (see 2.6.2.3), the mobile station shall do the following:

- If the burst type and broadcast address[4] indicates that response to the broadcast page is required, then the mobile station shall enter the *Update Overhead Information Substate* of the *System Access State* (see 2.6.3.2) with a page response indication within T_{33m} seconds after the page message is received.
- If the burst type and broadcast address indicates to monitor broadcast messages, then the mobile station shall continue to monitor the paging channel for a *BCMC Service Parameters Message* containing the BCMC_FLOW_ID in the broadcast address as follows:
  - The mobile station shall monitor the F-PCH for the duration of four F-PCH slots from the slot in which the broadcast page was received or until the *BCMC Service Parameters Message* containing the BCMC_FLOW_ID is received; if the mobile station detects the start of the *BCMC Service Parameters Message*, the mobile station shall monitor the F-PCH until the entire *BCMC Service Parameters Message* is received.

2.6.2.1.1.3.5 Support of Broadcast Delivery Options on the Paging Channel

A mobile station configured to receive broadcast messages shall support reception of broadcast messages transmitted using Multi-Slot Broadcast Message Transmission (see 3.6.2.4.1.1.2.1.1).

A mobile station configured to receive broadcast messages shall support reception of broadcast messages transmitted using Periodic Broadcast Paging (see 3.6.2.4.1.1.2.1.2).

2.6.2.1.1.3.6 Monitoring the Forward Common Control Channel for the Enhanced Broadcast Page

The following requirements apply to mobile stations monitoring the Forward Common Control Channel and supporting the reception of broadcast messages.

If $BCAST\_INDEX_S$ is equal to '000', the mobile station shall monitor only its assigned Quick Paging Channel slots or its assigned Forward Common Control Channel slots (see 2.6.2.1.2) for enhanced broadcast pages.

If $BCAST\_INDEX_S$ is not equal to '000', and the mobile station is configured to receive messages addressed to broadcast addresses, the mobile station should also monitor the Quick Paging Channel broadcast slots or the Forward Common Control Channel broadcast slots (see 2.6.2.1.2) beginning with the first slot of each broadcast paging cycle.

If the mobile station receives an enhanced broadcast page containing a burst type and broadcast address for a *Data Burst Message* that the mobile station has been configured to receive and $NUM\_BCCH\_BCAST_S$ does not equal '000', the mobile station should monitor at least one Broadcast Control Channel slot in which the corresponding broadcast message will be sent, determined as follows:

[4] Format of broadcast address for BCMC is defined in BCMC service document (see [30]).

- The mobile station shall monitor the Broadcast Control Channel slot which begins 40 ms × (1 + TIME_OFFSET) later than the beginning of the slot in which the message containing the enhanced broadcast page began or the Broadcast Control Channel slot which begins 40 ms × (1 + REPEAT_TIME_OFFSET) later than the Broadcast Control Channel slot in which the first transmission began.

If the mobile station receives an enhanced broadcast page containing a burst type and broadcast address for a *Data Burst Message* that the mobile station has been configured to receive and $NUM\_BCCH\_BCAST_S$ equals '000', the mobile station should monitor the slot in which the corresponding broadcast Forward Common Control Channel message will be sent, determined as follows:

- The mobile station shall consider an enhanced broadcast page to have been received in the Forward Common Control Channel slot in which the *General Page Message* or the *Universal Page Message* containing the enhanced broadcast page began.
- When $NUM\_BCCH\_BCAST_S$ equals 0, the mobile station shall monitor the Forward Common Control Channel slot which begins 40 ms × (1 + TIME_OFFSET) later than the beginning of the slot in which the message containing the enhanced broadcast page began or the Forward Common Control Channel slot which begins 40 ms × (1 + REPEAT_TIME_OFFSET) later than the Forward Common Control Channel slot in which the first transmission began.

After receiving an enhanced broadcast page for a *Data Burst Message* and a corresponding broadcast message when $BCAST\_INDEX_S$ is not equal to '000', the mobile station should discard all further enhanced broadcast pages containing the same BURST_TYPE and having the same broadcast address that are received within 4 × (B + 7) slots of the first slot in the broadcast paging cycle in which the enhanced broadcast page was received. (B + 7 is the duration of the broadcast paging cycle as defined in 2.6.2.1.1.3.3.1). The mobile station should ignore broadcast messages for which a corresponding enhanced broadcast page was not received.

After receiving an enhanced broadcast page for a *Data Burst Message* and a corresponding broadcast message when $BCAST\_INDEX_S$ is equal to '000', the mobile station should discard all further enhanced broadcast pages containing the same BURST_TYPE and having the same broadcast address that are received within $16 \times 2^{MAX\_SLOT\_CYLCE\_INDEX_s}$ slots of the slot in which the enhanced broadcast page was received. The mobile station should ignore broadcast messages for which a corresponding enhanced broadcast page was not received.

If the mobile station received an enhanced broadcast page for a *Data Burst Message* and a corresponding broadcast message, and the broadcast message announced by a pending enhanced broadcast page containing the same BURST_TYPE and having the same broadcast address has not yet been received, the mobile station shall ignore the pending enhanced broadcast page.

If the mobile station receives a broadcast page containing a burst type and broadcast address for BCMC that the mobile station has been configured to receive (see 2.6.2.3), the mobile station shall do the following:

- If the burst type and broadcast address indicates that response to the broadcast page is required, then the mobile station shall enter the *Update Overhead Information Substate* of the *System Access State* (see 2.6.3.2) with a page response indication within T_{33m} seconds after the page message is received.
- If the burst type and broadcast address indicates to monitor broadcast messages, then the mobile station shall monitor the Primary Broadcast Control Channel slot for a *BCMC Service Parameters Message* containing the BCMC_FLOW_ID in the broadcast address, determined as follows:
  - The mobile station shall start monitoring the Primary Broadcast Control Channel slot which begins 40 ms × (1 + TIME_OFFSET) later than the beginning of the slot in which the message containing the enhanced broadcast page began or the Primary Broadcast Control Channel slot which begins 40 ms × (1 + REPEAT_TIME_OFFSET) later than the Primary Broadcast Control Channel slot in which the first transmission began.
  - The mobile station shall continue to monitor the Primary Broadcast Control Channel for the duration of four F-BCCH slots or until the *BCMC Service Parameters Message* containing the BCMC_FLOW_ID is received; if the mobile station detects the start of the *BCMC Service Parameters Message*, the mobile station shall monitor the F-BCCH until the entire *BCMC Service Parameters Message* is received.

2.6.2.1.1.3.7 Support of Broadcast Delivery Options on the Forward Common Control Channel/Broadcast Control Channel when $NUM\_BCCH\_BCAST_S$ does not equal '000'

A mobile station configured to receive broadcast messages shall support reception of broadcast messages transmitted using Multi-Slot Enhanced Broadcast Paging (see 2.6.2.1.1.1.3.1).

A mobile station configured to receive broadcast messages shall support reception of broadcast messages transmitted using Periodic Enhanced Broadcast Paging (see 2.6.2.1.1.1.3.2).

2.6.2.1.1.3.7.1 Support of Broadcast Delivery Options on the Forward Common Control Channel when $NUM\_BCCH\_BCAST_S$ equals '000'

A mobile station configured to receive broadcast messages shall support reception of broadcast messages transmitted using Multi-Slot Enhanced Broadcast Message Transmission (see 2.6.2.1.1.1.4.1).

A mobile station configured to receive broadcast messages shall support reception of broadcast messages transmitted using Periodic Enhanced Broadcast Paging (see 2.6.2.1.1.1.4.2).

2.6.2.1.1.3.8 Slot Cycles for BSPM Transmission

2.6.2.1.1.3.8.1 BSPM Slot Cycle on the Paging Channel

On the Paging Channel, a BSPM slot cycle is a Paging Channel slot cycle having a duration of B + 1 slots where:

$$B = 2^i \times 16,\ 0 \le i \le 15$$

where i = $BSPM\_PERIOD\_INDEX_S$ as received in the *Extended System Parameters Message*.

The first slot of each BSPM slot cycle is any Paging Channel slot in which

$$\lfloor t/4 \rfloor \bmod (B + 1) = 0,$$

where t represents system time in 20ms frames.

2.6.2.1.1.3.8.2 BSPM Slot Cycle on the Primary Broadcast Control Channel

On the Primary Broadcast Control Channel, a BSPM slot cycle is a Primary Broadcast Control Channel slot cycle having a duration of B + 1 slots where:

$$B = 2^i \times 16,\ 0 \le i \le 15$$

where i = $BSPM\_PERIOD\_INDEX_S$ as received in the *MC-RR Parameters Message*.

The first slot of each BSPM slot cycle is any Primary Broadcast Control Channel slot in which

$$\lfloor t/2 \rfloor \bmod (B + 1) = 0,\ (40ms)$$

$$\lfloor t/4 \rfloor \bmod (B + 1) = 0,\ (80ms)$$

$$\lfloor t/8 \rfloor \bmod (B + 1) = 0,\ (160ms)$$

where t represents system time in 20ms frames and the number in the parenthesis represents the duration of the Primary Broadcast Control Channel slot (see [2]).

2.6.2.1.1.4 Common Channel Supervision

The mobile station shall monitor the Paging Channel, the Forward Common Control Channel, or the Primary Broadcast Control Channel as specified in 2.6.2.1.1. The mobile station shall set a timer for T_{30m} seconds whenever it begins to monitor the Paging Channel, the Forward Common Control Channel, or the Primary Broadcast Control Channel. The mobile station shall reset the timer for T_{30m} seconds whenever it gets an indication that a valid message was received on the Paging Channel, the Forward Common

Control Channel, or the Primary Broadcast Control Channel, whether addressed to the mobile station or not (see [4]). The mobile station shall disable the timer when it is not monitoring the Paging Channel, the Forward Common Control Channel, or the Primary Broadcast Control Channel. If the timer expires, the mobile station shall declare a loss of the Paging Channel, the Forward Common Control Channel, or the Primary Broadcast Control Channel.

2.6.2.1.2 Quick Paging Channel Monitoring Procedures

2.6.2.1.2.1 Overview

The Quick Paging Channel is divided into 80 ms slots called Quick Paging Channel slots.

The Quick Paging Channel protocol provides for scheduling the transmission of paging indicators for a mobile station in Quick Paging Channel slots assigned to the mobile station. Support of this feature is optional.

The Quick Paging Channel protocol provides for scheduling the transmission of configuration change indicators for mobile stations in Quick Paging Channel slots. Support of this feature is optional.

The Quick Paging Channel protocol provides for scheduling the transmission of broadcast indicators for mobile stations in Quick Paging Channel broadcast slots. Support of this feature is optional.

If the mobile station is operating in the slotted mode and it supports the Quick Paging Channel, and $QPCH\_SUPPORTED_S$ is equal to '1', the mobile station monitors paging indicators on the Quick Paging Channel[5] as follows:

The mobile station's assigned Quick Paging Channel slots are offset from its assigned Paging Channel slots or its assigned Forward Common Control Channel slots by 100 ms, as shown in Figure 2.6.2.1.2.1-1. Two paging indicators are assigned to a mobile station in its assigned Quick Paging Channel slot. In the following, t* is the start time of the mobile station's assigned Paging Channel or Forward Common Control Channel slot. According to the hash function specified in 2.6.7.1, paging indicators are assigned as follows:

- The first paging indicator for the mobile station is assigned between (t*-100) ms and (t*-80) ms (marked as 1 in Figure 2.6.2.1.2.1-1) and the second paging indicator is assigned between (t*-60) ms and (t*-40) ms (marked as 3 in the figure); or
- The first paging indicator for the mobile station is assigned between (t*-80) ms and (t*-60) ms (marked as 2 in the figure) and the second paging indicator is assigned between (t*-40) ms and (t*-20) ms (marked as 4 in the figure).

---

[5] One exception is if the mobile station is operating in the reduced slot cycle mode with a reduced slot cycle index of -3 or -4, and $IGNORE\_QPCH_S$ is equal to '1'.

If the mobile station is operating in the slotted mode and it supports the Quick Paging Channel, the mobile station can, when performing an idle handoff to a base station whose Paging Channel or Forward Common Control Channel/Primary Broadcast Control Channel has recently been monitored, monitor one or more configuration change indicators. Configuration change indicators are scheduled every 40 ms on the first Quick Paging Channel.

If the mobile station is operating in the slotted mode, is configured to receive the broadcast messages, supports the Quick Paging Channel, $BCAST\_INDEX_S$ is not equal to '000', $QPCH\_SUPPORTED_S$ is equal to '1', and $QPCH\_BI\_SUPPORTED_S$ is equal to '1', the mobile station monitors broadcast indicators on the Quick Paging Channel as follows:

- The mobile station's assigned Quick Paging Channel broadcast slots are offset from its assigned Forward Common Control Channel or Paging Channel broadcast slots by 100 ms, as shown in Figure 2.6.2.1.2.1-1.
- The mobile station monitors one or more broadcast indicators in an assigned Quick Paging Channel broadcast slot.

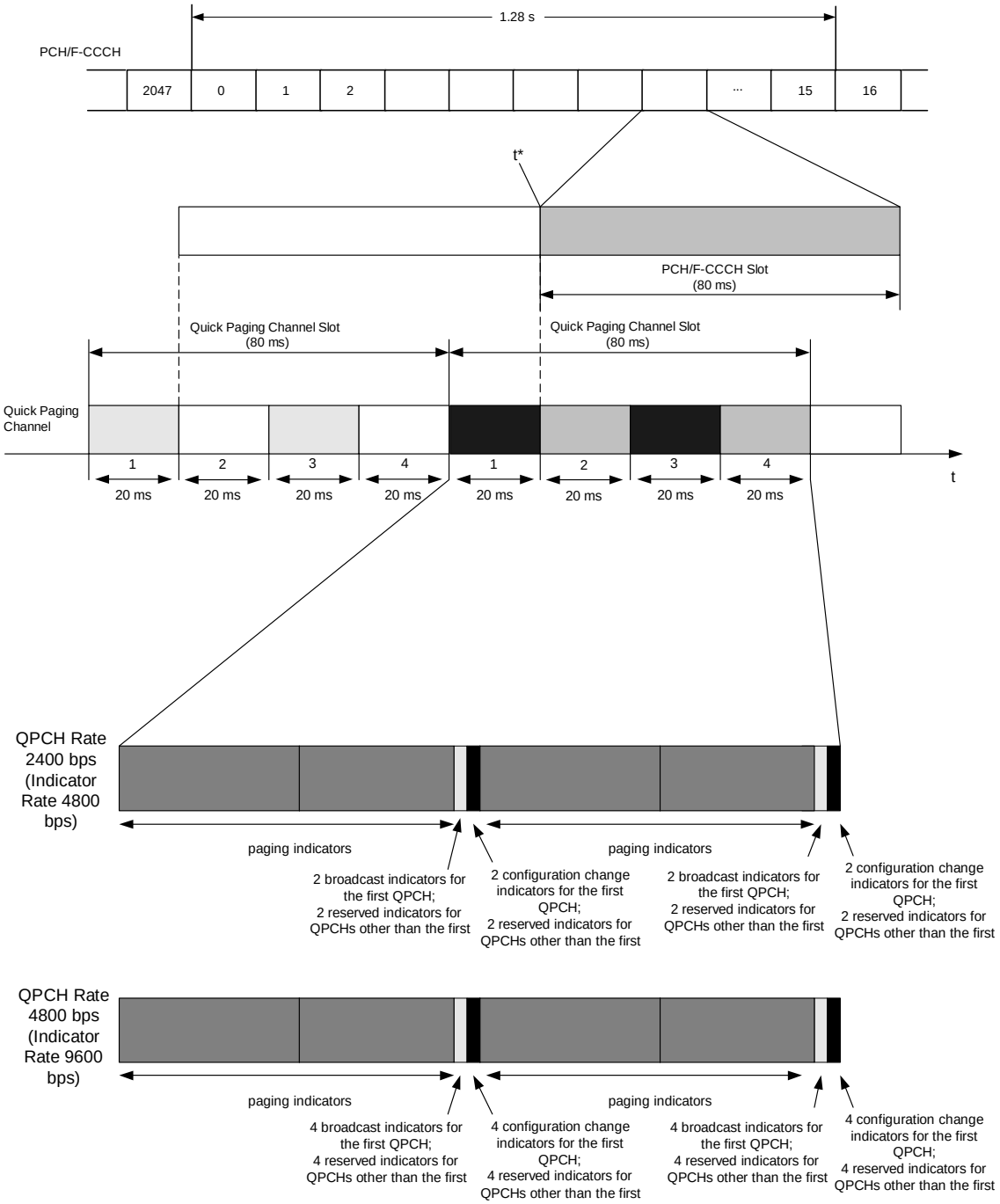

Figure 2.6.2.1.2.1-1. Quick Paging Channel Timeline

2.6.2.1.2.2 Requirements

A mobile station operating in the slotted mode should monitor the paging indicators in the mobile station's assigned Quick Paging Channel slot if all of the following conditions hold:

- The mobile station supports the Quick Paging Channel;
- $QPCH\_SUPPORTED_S$ = '1'; and
- The mobile station is not monitoring the Paging Channel or the Forward Common Control Channel.

The mobile station's assigned Quick Paging Channel slots shall be those slots in which

$$(\lfloor (t+5)/4 \rfloor - PGSLOT) \bmod (16 \times T) = 0.$$

where t is the System Time in 20ms frames, PGSLOT is selected in the range 0 to 2047 by using the hash function specified in 2.6.7.1, and T is the slot cycle length in units of 1.28 seconds such that

$$T = 2^i,$$

and i is the slot cycle index which can take the values -4, -3, -2, -1, 0, 1, 2, 3, 4, 5, 6, and 7.

To determine the position of the mobile station's two assigned paging indicators respective to the beginning of the mobile station's assigned Quick Paging Channel slot, the mobile station shall use the hash function specified in 2.6.7.1. The R1 and R2 outputs of the hashing algorithm correspond to an indicator bit position relative to the beginning of the Quick Paging Channel slot. The hashing algorithm is so devised that two paging indicators (R1 and R2) for a mobile station will be in the first and third quarter slot or the second and fourth quarter slot.

If the mobile station checks assigned paging indicators, the mobile station shall perform the following:

- If the mobile station detects that one of the paging indicators is set to "OFF", the mobile station need not detect another paging indicator.
- If the mobile station does not detect that at least one of the paging indicators is set to "OFF", the mobile station shall monitor its assigned Paging Channel or Forward Common Control Channel slot immediately following its assigned Quick Paging Channel slot.[6]

When performing an idle handoff to a base station whose Paging Channel or Forward Common Control Channel was previously monitored, a mobile station operating in the

[6] A case for which the mobile station may not be able to detect that at least one of the paging indicators is set to "OFF" is for a mobile station that misses a part of or its entire Quick Paging Channel slot during overhead information update. In this case, the mobile station monitors its assigned Paging Channel slot.

slotted mode should monitor one or more configuration change indicators on the first Quick Paging Channel for the new base station if all of the following conditions hold:

- The mobile station supports the Quick Paging Channel;
- The mobile station has knowledge that the new base station supports the Quick Paging Channel;
- The mobile station has knowledge that the new base station supports configuration change indicators,
- The mobile station is not monitoring the Paging Channel or the Forward Common Control Channel; and
- No more than T_{31m} seconds have elapsed since the mobile station last received a valid message on the new Paging Channel or the new Forward Common Control Channel.

Before monitoring a configuration change indicator, the mobile station shall perform the following:

- The mobile station shall set $ASSIGNED\_QPAGECH_S$ equal to $QPAGECH_S$, and
- The mobile station shall set $QPAGECH_S$ equal to 1.

Before monitoring a paging indicator subsequent to monitoring a configuration change indicator, the mobile station shall set $QPAGECH_S$ equal to $ASSIGNED\_QPAGECH_S$.

If the Quick Paging Channel data rate is 2400 bps (indicator rate is 4800 bps), the bit positions of the mobile station's first pair of configuration change indicators shall be the last two bits in the first 40 ms half of a Quick Paging Channel slot. The bit positions of the mobile station's second pair of configuration change indicators shall be the last two bits in a Quick Paging Channel slot.

If the Quick Paging Channel data rate is 4800 bps (indicator rate is 9600 bps), the bit positions of the mobile station's first four configuration change indicators shall be the last four bits in the first 40 ms half of a Quick Paging Channel slot. The bit positions of the mobile station's second four configuration change indicators shall be the last four bits in a Quick Paging Channel slot.

If the mobile station monitors a configuration change indicator and determines that it is set to "OFF", the mobile station can enter or remain in the slotted mode after an idle handoff (see 2.6.2.1.4.2).

If a mobile station is operating in the slotted mode and is configured to receive broadcast messages, it should monitor the broadcast indicators in the mobile station's assigned Quick Paging Channel broadcast slot if all of the following conditions hold:

- The mobile station supports the Quick Paging Channel;
- $BCAST\_INDEX_S$ is not equal to '000'
- $QPCH\_BI\_SUPPORTED_S$ = '1'; and
- The mobile station is not monitoring the Forward Common Control Channel, the Primary Broadcast Control Channel, or the Paging Channel.

The mobile station's assigned Quick Paging Channel broadcast slots shall be those slots in which

$$\lfloor (t+5)/4 \rfloor \bmod (B + 7) = 0.$$

where t is the System Time in 20ms frames, and B is the broadcast paging cycle such that $B = 2^{1+i} \times 16$, $1 \le i \le 7$ and $i = \text{BCAST\_INDEX}_S$ as received in the *MC-RR Parameters Message*.

The mobile station's assigned Quick Paging Channel broadcast slots shall be those slots in which

$$\lfloor (t+5)/4 \rfloor \bmod (B + 3) = 0.$$

where t is the System Time in 20ms frames, and B is the broadcast paging cycle such that $B = 2^{i} \times 16$, $1 \le i \le 7$ and $i = \text{BCAST\_INDEX}_S$ as received in the *Extended System Parameters Message*.

The mobile station should monitor one or more broadcast indicators on the Quick Paging Channel. If the Quick Paging Channel data rate is 2400 bps (indicator rate is 4800 bps), the bit positions of the mobile station's first pair of broadcast indicators shall be the two bits prior to the last two bits in the first 40 ms half of a Quick Paging Channel slot. The bit positions of the mobile station's second pair of broadcast indicators shall be the two bits prior to the last two bits in a Quick Paging Channel slot.

If the Quick Paging Channel data rate 4800 bps (indicator rate is 9600 bps), the bit positions of the mobile station's first four broadcast indicators shall be the four bits prior to the last four bits in the first 40 ms half of a Quick Paging Channel slot. The bit positions of the mobile station's second four broadcast indicators shall be the four bits prior to the last four bits in a Quick Paging Channel slot.

If the mobile station monitors broadcast indicators and determines that they are not set to "OFF", the mobile station should perform the following:

- The mobile station should receive its assigned broadcast slot on the Forward Common Control Channel or Paging Channel immediately following its assigned Quick Paging Channel broadcast slot.

2.6.2.1.3 Registration

While in the *Mobile Station Idle State*, the mobile station shall perform the registration procedures specified in 2.6.5.5.2.1.

2.6.2.1.4 Idle Handoff

2.6.2.1.4.1 Pilot Search

An idle handoff occurs when a mobile station has moved from the coverage area of one base station into the coverage area of another base station during the *Mobile Station Idle State*. If the mobile station detects a Pilot Channel signal from another base station that is sufficiently stronger than that of the current base station, the mobile station determines that an idle handoff should occur.

If both $AP\_IDT\_MSG\_SEQ_S$ and $INTRA\_FREQ\_HO\_HYS_S$ are not set to NULL, the mobile station shall only perform idle handoff to another pilot on the same frequency as the current base station when the following condition is satisfied:

Target Pilot Ec/Io (dB) > ($INTRA\_FREQ\_HO\_SLOPE_S$/8) × Current Pilot Ec/Io (dB) + $INTRA\_FREQ\_HO\_HYS_S$ (dB).

If both $AP\_IDT\_MSG\_SEQ_S$ and $INTER\_FREQ\_HO\_HYS_S$ are not set to NULL, the mobile station shall only perform idle handoff to another pilot on a different frequency than that of the current base station when the following condition is satisfied:

Target Pilot Ec/Io (dB) > ($INTER\_FREQ\_HO\_SLOPE_S$/8) × Current Pilot Ec/Io (dB) + $INTER\_FREQ\_HO\_HYS_S$ (dB).

When multiple idle handoff candidates are available, the mobile station should select, if any, a candidate which supports Primary Broadcast Control Channel.

Pilot Channels are identified by their offsets relative to the zero offset pilot PN sequence (see 3.1.3.2.1). Pilot offsets are grouped into sets describing their status with regard to pilot searching.

The following sets of pilot offsets are defined for a mobile station in the *Mobile Station Idle State*. Each pilot offset is a member of only one set.

- Active Set: The pilot offset of the Forward CDMA Channel whose Paging Channel or Forward Common Control Channel is being monitored.
- Neighbor Set: The offsets of the Pilot Channels that are likely candidates for idle handoff. The members of the Neighbor Set are specified in the *Neighbor List Message*, *Extended Neighbor List Message*, and the *General Neighbor List Message* on the Paging Channel, and the *Universal Neighbor List Message* on the Primary Broadcast Control Channel.
- Remaining Set: The set of all possible pilot offsets in the current system (integer multiples of $PILOT\_INC_S$) on the current CDMA Frequency Assignment, excluding the pilots in the Neighbor Set and the Active Set.
- Private Neighbor Set: The offsets of the Pilot Channels for the private systems that are likely candidates for idle handoff. The members of the Private Neighbor Set are specified in the *Private Neighbor List Message*.

The mobile station shall support a Neighbor Set size of at least N_{8m} pilots (see Annex D).

In the *Mobile Station Idle State*, the mobile station shall continuously search for the strongest Pilot Channel signal on the corresponding CDMA Frequency Assignment whenever it monitors the Paging Channel or the Forward Common Control Channel.

The mobile station may search other frequencies and band classes. For example, if a pilot in the Neighbor Set or in the Private Neighbor Set is on a different Frequency Assignment than that of the mobile station, this frequency should be included in the search criteria. Search performance criteria are defined in [11]. If both $AP\_IDT\_MSG\_SEQ_S$ and $INTER\_FREQ\_SRCH\_TH_S$ are not set to NULL, the MS shall only start searching on

different frequencies than that of the current pilot when its current pilot Ec/Io is below $INTER\_FREQ\_SRCH\_TH_S$.

This search should be governed by the following:

- Active Set: The search window size for the pilot in the Active Set shall be the number of PN chips specified in Table 2.6.6.2.1-1 corresponding to $SRCH\_WIN\_A_S$. The mobile station should center the search window for the pilot of the Active Set around the earliest arriving usable multipath component of the pilot. If the mobile station receives a value greater than or equal to 13 for $SRCH\_WIN\_A_r$, it may store and use the value 13 in $SRCH\_WIN\_A_S$.

- Neighbor Set: The search window size for each pilot in the Neighbor Set shall be the number of PN chips specified in Table 2.6.6.2.1-1 corresponding to $SRCH\_WIN\_NGHBR_S$ field of the NGHBR_REC for the pilot. The mobile station should center the search window for each pilot in the Neighbor Set around the pilot's PN sequence offset plus the corresponding $SRCH\_OFFSET\_NGHBR_S$ (see Table 2.6.6.2.1-2) using timing defined by the mobile station's time reference (see [2]). The mobile station should use the SEARCH_PRIORITY field of the NGHBR_REC for the corresponding pilot to schedule its neighbor search. If ADD_PILOT_REC_INCL field of the NGHBR_REC for the corresponding pilot is equal to '1', the mobile station shall use the information included in the NGHBR_PILOT_REC field for searching the neighbor.

  If the mobile station supports hopping pilot beacons and the TIMING_INCL field of the NGHBR_REC for the corresponding pilot is equal to '1', then the mobile station shall use the information included in the NGHBR_TX_OFFSET, NGHBR_TX_DURATION, and NGHBR_TX_PERIOD fields of the NGHBR_REC for the corresponding pilot to schedule the time for searching the neighbor.

- Remaining Set: The search window size for each pilot in the Remaining Set shall be the number of PN chips specified in Table 2.6.6.2.1-1 corresponding to $SRCH\_WIN\_R_S$. The mobile station should center the search window for each pilot in the Remaining Set around the pilot's PN sequence offset using timing defined by the mobile station's time reference (see [2]). The mobile station should only search for Remaining Set pilots whose pilot PN sequence offset indices are equal to integer multiples of $PILOT\_INC_S$.

- Private Neighbor Set: The search window size for each pilot in the Private Neighbor Set shall be the number of PN chips specified in Table 2.6.6.2.1-1 corresponding to $SRCH\_WIN\_PRI\_NGHBR_S$ field of the PRI_NGHBR_REC for the pilot. The mobile station should center the search window for each pilot in the Private Neighbor Set around the pilot's PN sequence offset using timing defined by the mobile station's time reference (see [2]).

If the mobile station determines that one of the Neighbor Set, Private Neighbor Set or Remaining Set Pilot Channel signals is sufficiently stronger (see [11]) than the Pilot Channel of the Active Set, the mobile station should perform an idle handoff as follows:

- If the mobile station is currently monitoring a Forward Supplemental Channel, the mobile station shall perform an idle handoff as specified in 2.6.13.4;

- Otherwise, the mobile station shall perform an idle handoff as specified in 2.6.2.1.4.2.

If RER_MODE_ENABLED is equal to YES, the mobile station performs idle handoff to a Pilot Channel that is not in RER_PILOT_LIST (see 2.6.4.4.2 and [4]), RER_SID_S is equal to SID_S, RER_NID_S is equal to NID_S, and $RER\_MODE\_SUPPORTED_S$ is equal to '1', the mobile station shall send a *Radio Environment Message* by performing the *Mobile Station Message Transmission Operation* as specified in 2.6.2.6.

A mobile station operating in slotted mode, which is successfully demodulating the Paging Channel or the Forward Common Control Channel, should not perform an idle handoff while it is required to monitor its assigned slot (see 2.6.2.1.1.3.1).

2.6.2.1.4.2 Idle Handoff Procedures

While performing an idle handoff, the mobile station should not begin operating in non-slotted mode after the idle handoff if all of the following conditions hold:

- The mobile station supports the Quick Paging Channel;
- The mobile station has knowledge that the new base station supports configuration change indicators;
- The mobile station determines that the Quick Paging Channel configuration change indicator for the new Quick Paging Channel is set to "OFF" (see 2.6.2.1.2.1); and
- No more than T_{31m} seconds have elapsed since the mobile station last received a valid message on the new Paging Channel or Forward Common Control Channel/Primary Broadcast Control Channel.

Otherwise, the mobile station shall operate in non-slotted mode until the mobile station has received at least one valid configuration message or mobile station-addressed page on the new Paging Channel or Forward Common Control Channel/Primary Broadcast Control Channel. Following the reception of this message the mobile station may resume slotted mode operation in accordance with 2.6.2.1.1.3. After performing an idle handoff, the mobile station shall discard all unprocessed messages received on the old Paging Channel or Forward Common Control Channel/Primary Broadcast Control Channel.

If the new base station is listed in NGHBR_REC_LIST for the old base station (see 2.6.2.2.3, 2.6.2.2.7, and 2.6.2.1.4.1), the mobile station shall use the corresponding 3-bit NGHBR_CONFIG field to determine the actions required to transition to the new base station. If the new base station is not listed in NGHBR_REC_LIST for the old base station, the mobile station shall perform the handoff operation using the same procedure as for a pilot in NGHBR_REC_LIST with the NGHBR_CONFIG field set to '011'.

If the mobile station is currently monitoring the Paging Channel and selected a neighbor base station for idle handoff which supports Primary Broadcast Control Channel, the mobile station shall perform the following:

– The mobile station shall enter the *System Determination Substate* of the *Mobile Station Initialization State* with a new system indication, upon performing idle handoff to this neighbor base station.

– The mobile station shall not perform any of the remaining procedures in this section.

If the NGHBR_CONFIG field is '000', the mobile station shall perform the following:

- The mobile station shall set $ACC\_MSG\_SEQ_S$ and CURR_ACC_MSG_SEQ to NULL (see 2.6.2.2) and shall set $PILOT\_PN_S$ to the pilot offset index of the base station transmitting the new Paging Channel or Forward Common Control Channel/Primary Broadcast Control Channel.

- If the mobile station has not stored configuration parameters for the new Paging Channel or Forward Common Control Channel and Primary Broadcast Control Channel, or if the stored information is not current, the mobile station shall perform the following:

  - If the mobile station has monitored the Paging Channel before the idle handoff, the mobile station shall set $CONFIG\_MSG\_SEQ_S$, $SYS\_PAR\_MSG\_SEQ_S$, $NGHBR\_LST\_MSG\_SEQ_S$, $EXT\_NGHBR\_LST\_MSG\_SEQ_S$, $GEN\_NGHBR\_LST\_MSG\_SEQ_S$, $CHAN\_LST\_MSG\_SEQ_S$, $EXT\_SYS\_PAR\_MSG\_SEQ_S$, $GLOB\_SERV\_REDIR\_MSG\_SEQ_S$, $EXT\_GLOB\_SERV\_REDIR\_MSG\_SEQ_S$, $EXT\_CHAN\_LST\_MSG\_SEQ_S$, $FD\_CHAN\_LST\_MSG\_SEQ_S$, $USER\_ZONE\_ID\_MSG\_SEQ_S$, and $PRI\_NGHBR\_LST\_MSG\_SEQ_S$ to NULL.

  - If the mobile station has monitored the Forward Common Control Channel/Primary Broadcast Control Channel before the idle handoff, the mobile station shall set $CONFIG\_MSG\_SEQ_S$, $A41\_SYS\_PAR\_MSG\_SEQ_S$, $UNI\_NGHBR\_LST\_MSG\_SEQ_S$, $MC\_RR\_PAR\_MSG\_SEQ_S$, $EXT\_GLOB\_SERV\_REDIR\_MSG\_SEQ_S$, $EXT\_CHAN\_LST\_MSG\_SEQ_S$, $FD\_CHAN\_LST\_MSG\_SEQ_S$, $USER\_ZONE\_ID\_MSG\_SEQ_S$, and $PRI\_NGHBR\_LST\_MSG\_SEQ_S$ to NULL.

- If the stored information for the new Paging Channel or the Forward Common Control Channel and Primary Broadcast Control Channel is current, the mobile station shall set $CONFIG\_MSG\_SEQ_S$ to the stored information for the new Paging Channel or Forward Common Control Channel and Primary Broadcast Control Channel, and the mobile station shall set NGHBR_REC_LIST to the stored information for the new Paging Channel or the new Forward Common Control Channel and Primary Broadcast Control Channel.

- If the associated $NGHBR\_BAND_S$ or $NGHBR\_FREQ_S$ of the new base station in NGHBR_REC_LIST of the old base station is not equal to $CDMABAND_S$ and $CDMACH_S$ respectively, the mobile station shall set $CDMABAND_S$ to $NGHBR\_BAND_S$, $CDMACH_S$ to $NGHBR\_FREQ_S$, and tune to the new CDMA Channel. The mobile station shall begin monitoring the Paging Channel or the Forward Common Control Channel/Primary Broadcast Control Channel of the new base station, using the same rate, code rate, and code channel, as applicable.

- If $PACA_S$ is equal to enabled, the mobile station shall enter the *Update Overhead Information Substate* of the *System Access State* (see 2.6.3) with an origination indication within T_{33m} seconds to re-originate the PACA call using the new base station.

If the NGHBR_CONFIG field is '001', the mobile station shall perform the following:

- The mobile station shall set $ACC\_MSG\_SEQ_S$ and CURR_ACC_MSG_SEQ to NULL and shall set $PILOT\_PN_S$ to the pilot offset index of the base station transmitting the new Paging Channel.
- If the stored information for Primary Paging Channel or any of the Paging Channels on the associated $NGHBR\_FREQ_S$ of the new base station in NGHBR_REC_LIST of the old base station is current, the mobile station shall perform the following:
  - The mobile station shall use the hash algorithm specified in 2.6.7.1 to select a new Paging Channel number in the range 1 to $PAGE\_CHAN_S$, where $PAGE\_CHAN_S$ is the value stored for the Paging Channel whose stored information is current. The mobile station shall store the new Paging Channel number as $PAGECH_S$. The mobile station shall perform the following:
    - If the mobile station has not stored configuration parameters for the new Paging Channel, or if the stored parameters are not current (see 2.6.2.2), the mobile station shall set $CONFIG\_MSG\_SEQ_S$, $SYS\_PAR\_MSG\_SEQ_S$, $NGHBR\_LST\_MSG\_SEQ_S$, $EXT\_NGHBR\_LST\_MSG\_SEQ_S$, $GEN\_NGHBR\_LST\_MSG\_SEQ_S$, $CHAN\_LST\_MSG\_SEQ_S$, $EXT\_SYS\_PAR\_MSG\_SEQ_S$, $USER\_ZONE\_ID\_MSG\_SEQ_S$, $PRI\_NGHBR\_LST\_MSG\_SEQ_S$, and $EXT\_GLOB\_SERV\_REDIR\_MSG\_SEQ_S$, $EXT\_CHAN\_LST\_MSG\_SEQ_S$, $FD\_CHAN\_LST\_MSG\_SEQ_S$, and $GLOB\_SERV\_REDIR\_MSG\_SEQ_S$ to NULL.
    - If the stored information for the new Paging Channel is current, the mobile station shall set $CONFIG\_MSG\_SEQ_S$ to the stored information for the new Paging Channel and set NGHBR_REC_LIST to the stored information for the new Paging Channel.
  - If the mobile station has monitored the Forward Common Control Channel/Primary Broadcast Control Channel before the idle handoff, the mobile station shall set Paging Channel data rate, $PRAT_S$ = '00'.
  - If the associated $NGHBR\_BAND_S$ or $NGHBR\_FREQ_S$ of the new base station in NGHBR_REC_LIST of the old base station is not equal to $CDMABAND_S$ and $CDMACH_S$ respectively, the mobile station shall set $CDMABAND_S$ to $NGHBR\_BAND_S$, $CDMACH_S$ to $NGHBR\_FREQ_S$, and tune to the new CDMA Channel. The mobile station shall begin monitoring the new Paging Channel of the new base station.

- If none of the Paging Channel stored information on the associated $NGHBR\_FREQ_S$ of the new base station in NGHBR_REC_LIST of the old base station are current, the mobile station shall perform the following:

  - The mobile station shall set $CONFIG\_MSG\_SEQ_S$, $SYS\_PAR\_MSG\_SEQ_S$, $NGHBR\_LST\_MSG\_SEQ_S$, $EXT\_NGHBR\_LST\_MSG\_SEQ_S$, $GEN\_NGHBR\_LST\_MSG\_SEQ_S$, $CHAN\_LST\_MSG\_SEQ_S$, $EXT\_SYS\_PAR\_MSG\_SEQ_S$, $GLOB\_SERV\_REDIR\_MSG\_SEQ_S$, $EXT\_GLOB\_SERV\_REDIR\_MSG\_SEQ_S$, $EXT\_CHAN\_LST\_MSG\_SEQ_S$, $FD\_CHAN\_LST\_MSG\_SEQ_S$, $USER\_ZONE\_ID\_MSG\_SEQ_S$, and $PRI\_NGHBR\_LST\_MSG\_SEQ_S$ to NULL.

  - If the mobile station has monitored the Forward Common Control Channel/Primary Broadcast Control Channel before the idle handoff, the mobile station shall set Paging Channel data rate, $PRAT_S$ = '00'.

  - The mobile station shall set $PAGE\_CHAN_S$ to '1' and $PAGECH_S$ to the Primary Paging Channel. If the associated $NGHBR\_BAND_S$ or $NGHBR\_FREQ_S$ of the new base station in NGHBR_REC_LIST of the old base station is not equal to $CDMABAND_S$ and $CDMACH_S$ respectively, the mobile station shall set $CDMABAND_S$ to $NGHBR\_BAND_S$, $CDMACH_S$ to $NGHBR\_FREQ_S$, and tune to the new CDMA Channel. The mobile station shall begin monitoring the Primary Paging Channel of the new base station.

- If $PACA_S$ is equal to enabled, the mobile station shall enter the *Update Overhead Information Substate* of the *System Access State* (see 2.6.3) with an origination indication within T_{33m} seconds to re-originate the PACA call using the new base station.

If the NGHBR_CONFIG field is '010', the mobile station shall perform the following:

- The mobile station shall set $ACC\_MSG\_SEQ_S$ and CURR_ACC_MSG_SEQ to NULL and shall set $PILOT\_PN_S$ to the pilot offset index of the base station transmitting the new Paging Channel or Forward Common Control Channel/Primary Broadcast Control Channel.

- If the mobile station has monitored the Paging Channel before the idle handoff, the mobile station shall perform the following:

  - If the stored information for Primary Paging Channel or any of the Paging Channels on the target frequency or any of the frequencies of the new base station is current, the mobile station shall perform the following:

    + The mobile station shall use the hash algorithm specified in 2.6.7.1 and the stored value of the number of CDMA channels to determine the new CDMA Channel and shall set FREQ_NEW to this new CDMA Channel. The mobile station shall perform the following:

- If the stored information for any of the Paging Channels on the CDMA channel specified by FREQ_NEW is current, the mobile station shall perform the following:
  - The mobile station shall use the hash algorithm specified in 2.6.7.1 to select a new Paging Channel number in the range 1 to $PAGE\_CHAN_S$, where $PAGE\_CHAN_S$ is the value stored for the Paging Channel whose stored information is current. The mobile station shall store the new Paging Channel number as $PAGECH_S$. The mobile station shall perform the following:
    - If the mobile station has not stored configuration parameters for the new Paging Channel, or if the stored parameters are not current (see 2.6.2.2), the mobile station shall set $CONFIG\_MSG\_SEQ_S$, $SYS\_PAR\_MSG\_SEQ_S$, $NGHBR\_LST\_MSG\_SEQ_S$, $EXT\_NGHBR\_LST\_MSG\_SEQ_S$, $GEN\_NGHBR\_LST\_MSG\_SEQ_S$, $CHAN\_LST\_MSG\_SEQ_S$, $EXT\_SYS\_PAR\_MSG\_SEQ_S$, $USER\_ZONE\_ID\_MSG\_SEQ_S$, $PRI\_NGHBR\_LST\_MSG\_SEQ_S$, and $EXT\_GLOB\_SERV\_REDIR\_MSG\_SEQ_S$, $EXT\_CHAN\_LST\_MSG\_SEQ_S$, $FD\_CHAN\_LST\_MSG\_SEQ_S$, and $GLOB\_SERV\_REDIR\_MSG\_SEQ_S$ to NULL.
    - If the stored information for the new Paging Channel is current, the mobile station shall set $CONFIG\_MSG\_SEQ_S$ to the stored information for the new Paging Channel and set NGHBR_REC_LIST to the stored information for the new Paging Channel.
  - If the band class corresponding to FREQ_NEW is not equal to $CDMABAND_S$ of the old base station or FREQ_NEW is not equal to $CDMACH_S$ of the old base station, the mobile station shall set $CDMABAND_S$ to band class corresponding to FREQ_NEW and shall set $CDMACH_S$ to FREQ_NEW, and tune to the new CDMA Channel. The mobile station shall begin monitoring the new Paging Channel of the new base station.
- If none of the Paging Channel stored information on the CDMA channel specified by FREQ_NEW are current, the mobile station shall perform the following:
  - The mobile station shall set $CONFIG\_MSG\_SEQ_S$, $SYS\_PAR\_MSG\_SEQ_S$, $NGHBR\_LST\_MSG\_SEQ_S$, $EXT\_NGHBR\_LST\_MSG\_SEQ_S$, $GEN\_NGHBR\_LST\_MSG\_SEQ_S$, $CHAN\_LST\_MSG\_SEQ_S$, $EXT\_SYS\_PAR\_MSG\_SEQ_S$, $GLOB\_SERV\_REDIR\_MSG\_SEQ_S$, $EXT\_GLOB\_SERV\_REDIR\_MSG\_SEQ_S$, $EXT\_CHAN\_LST\_MSG\_SEQ_S$, $FD\_CHAN\_LST\_MSG\_SEQ_S$, $USER\_ZONE\_ID\_MSG\_SEQ_S$, and $PRI\_NGHBR\_LST\_MSG\_SEQ_S$ to NULL.

◊ The mobile station shall set $PAGE\_CHAN_S$ to '1' and $PAGECH_S$ to the Primary Paging Channel. If the band class corresponding to FREQ_NEW is not equal to $CDMABAND_S$ of the old base station or FREQ_NEW is not equal to $CDMACH_S$ of the old base station, the mobile station shall set $CDMABAND_S$ to band class corresponding to FREQ_NEW and shall set $CDMACH_S$ to FREQ_NEW, and tune to the new CDMA Channel. The mobile station shall begin monitoring the Primary Paging Channel of the new base station.

- If none of the Paging Channel stored information on any of the frequencies of the new base station are current, the mobile station shall perform the following:

  + The mobile station shall set $CONFIG\_MSG\_SEQ_S$, $SYS\_PAR\_MSG\_SEQ_S$, $NGHBR\_LST\_MSG\_SEQ_S$, $EXT\_NGHBR\_LST\_MSG\_SEQ_S$, $GEN\_NGHBR\_LST\_MSG\_SEQ_S$, $CHAN\_LST\_MSG\_SEQ_S$, $EXT\_SYS\_PAR\_MSG\_SEQ_S$, $GLOB\_SERV\_REDIR\_MSG\_SEQ_S$, $EXT\_GLOB\_SERV\_REDIR\_MSG\_SEQ_S$, $EXT\_CHAN\_LST\_MSG\_SEQ_S$, $FD\_CHAN\_LST\_MSG\_SEQ_S$, $USER\_ZONE\_ID\_MSG\_SEQ_S$, and $PRI\_NGHBR\_LST\_MSG\_SEQ_S$ to NULL.

  + The mobile station shall set $PAGE\_CHAN_S$ to '1' and $PAGECH_S$ to the Primary Paging Channel. If the associated $NGHBR\_BAND_S$ or $NGHBR\_FREQ_S$ of the new base station in NGHBR_REC_LIST of the old base station is not equal to $CDMABAND_S$ and $CDMACH_S$ of the old base station respectively, the mobile station shall set $CDMABAND_S$ to $NGHBR\_BAND_S$, and $CDMACH_S$ to $NGHBR\_FREQ_S$; otherwise, the mobile station shall set $CDMACH_S$ as follows:

    o If the *Extended CDMA Channel List Message* is being sent on the old base station, set $CDMACH_S$ to the first CDMA Channel given in the *Extended CDMA Channel List Message* for the old base station.

    o Otherwise, set $CDMACH_S$ to the first CDMA Channel given in the *CDMA Channel List Message* for the old base station.

    Then the mobile station shall tune to the new CDMA channel and begin monitoring the Primary Paging Channel of the new base station.

• If the mobile station has monitored the Forward Common Control Channel/Primary Broadcast Control Channel before the idle handoff, the mobile station shall perform the following:

  – If the stored information for any of the Forward Common Control Channels and Primary Broadcast Control Channel on any of the frequencies of the new base station is current, the mobile station shall perform the following:

- The mobile station shall use the hash algorithm specified in 2.6.7.1 and the stored value of the number of CDMA channels to determine the new CDMA Channel and shall set FREQ_NEW to this new CDMA Channel. The mobile station shall perform the following
  - If the stored information for any of the Forward Common Control Channels and Primary Broadcast Control Channel on the CDMA channel specified by FREQ_NEW is current, the mobile station shall perform the following:
    - The mobile station shall use the hash algorithm specified in 2.6.7.1 to select a new Forward Common Control Channel number in the range 1 to NUM_FCCCH_S, where NUM_FCCCH_S is the stored value. The mobile station shall store the new Forward Common Control Channel number as $FCCCH\_ID_S$.
    - If the stored information for this new Forward Common Control Channel and Primary Broadcast Control Channel is current, the mobile station shall perform the following:
      - The mobile station shall set $CONFIG\_MSG\_SEQ_S$ to the stored information for this new Forward Common Control Channel and Primary Broadcast Control Channel and the mobile station shall set NGHBR_REC_LIST to the stored information for this new Forward Common Control Channel and Primary Broadcast Control Channel.
      - If the band class corresponding to FREQ_NEW is not equal to $CDMABAND_S$ of the old base station or FREQ_NEW is not equal to $CDMACH_S$ of the old base station, the mobile station shall set $CDMABAND_S$ to band class corresponding to FREQ_NEW and shall set $CDMACH_S$ to FREQ_NEW, and tune to the new CDMA Channel. The mobile station shall begin monitoring the new Forward Common Control Channel/Primary Broadcast Control Channel of the new base station.
    - If the stored information for this new Forward Common Control Channel and Primary Broadcast Control Channel is not current, the mobile station shall perform the following:
      - The mobile station shall set $CONFIG\_MSG\_SEQ_S$, $A41\_SYS\_PAR\_MSG\_SEQ_S$, $UNI\_NGHBR\_LST\_MSG\_SEQ_S$, $MC\_RR\_PAR\_MSG\_SEQ_S$, $EXT\_GLOB\_SERV\_REDIR\_MSG\_SEQ_S$, $EXT\_CHAN\_LST\_MSG\_SEQ_S$, $FD\_CHAN\_LST\_MSG\_SEQ_S$, $USER\_ZONE\_ID\_MSG\_SEQ_S$, and $PRI\_NGHBR\_LST\_MSG\_SEQ_S$ to NULL.

- If the band class corresponding to FREQ_NEW is not equal to $CDMABAND_S$ of the old base station or FREQ_NEW is not equal to $CDMACH_S$ of the old base station, the mobile station shall set $CDMABAND_S$ to band class corresponding to FREQ_NEW and shall set $CDMACH_S$ to FREQ_NEW, and tune to the new CDMA Channel. The mobile station shall begin monitoring the Primary Broadcast Control Channel of the new base station.

o If none of the Forward Common Control Channel and Primary Broadcast Control Channel stored information on the CDMA channel specified by FREQ_NEW are current, the mobile station shall perform the following:

◊ The mobile station shall set $CONFIG\_MSG\_SEQ_S$, $A41\_SYS\_PAR\_MSG\_SEQ_S$, $UNI\_NGHBR\_LST\_MSG\_SEQ_S$, $MC\_RR\_PAR\_MSG\_SEQ_S$, $EXT\_GLOB\_SERV\_REDIR\_MSG\_SEQ_S$, $EXT\_CHAN\_LST\_MSG\_SEQ_S$, $FD\_CHAN\_LST\_MSG\_SEQ_S$, $USER\_ZONE\_ID\_MSG\_SEQ_S$, and $PRI\_NGHBR\_LST\_MSG\_SEQ_S$ to NULL.

◊ If the associated $NGHBR\_BAND_S$ of the new base station in NGHBR_REC_LIST of the old base station is not equal to $CDMABAND_S$ or the associated $NGHBR\_FREQ_S$ of the new base station in NGHBR_REC_LIST of the old base station is not equal to $CDMACH_S$ of the old base station, the mobile station shall set $CDMABAND_S$ to $NGHBR\_BAND_S$, $CDMACH_S$ to $NGHBR\_FREQ_S$, and tune to the new CDMA Channel. Otherwise, the mobile station shall set $CDMACH_S$ to the first CDMA Channel given in the *Extended CDMA Channel List Message* for the old base station and tune to the new CDMA channel.

◊ Then the mobile station shall begin monitoring the Primary Broadcast Control Channel of the new base station, using the same rate, code rate, and code channel.

– If none of the Forward Common Control Channel and Primary Broadcast Control Channel stored information on any of the frequencies of the new base station are current, the mobile station shall perform the following:

+ The mobile station shall set $CONFIG\_MSG\_SEQ_S$, $A41\_SYS\_PAR\_MSG\_SEQ_S$, $UNI\_NGHBR\_LST\_MSG\_SEQ_S$, $MC\_RR\_PAR\_MSG\_SEQ_S$, $EXT\_GLOB\_SERV\_REDIR\_MSG\_SEQ_S$, $EXT\_CHAN\_LST\_MSG\_SEQ_S$, $FD\_CHAN\_LST\_MSG\_SEQ_S$, $USER\_ZONE\_ID\_MSG\_SEQ_S$, and $PRI\_NGHBR\_LST\_MSG\_SEQ_S$ to NULL.

+ If the associated $NGHBR\_BAND_S$ or $NGHBR\_FREQ_S$ of the new base station in NGHBR_REC_LIST of the old base station is not equal to $CDMABAND_S$ and $CDMACH_S$ of the old base station respectively, the mobile station shall set $CDMABAND_S$ to $NGHBR\_BAND_S$, $CDMACH_S$ to $NGHBR\_FREQ_S$, and tune to the new CDMA Channel. Otherwise, the mobile station shall set $CDMACH_S$ to the first CDMA Channel given in the *Extended CDMA Channel List Message* for the old base station and tune to the new CDMA channel.

+ Then the mobile station shall begin monitoring the Primary Broadcast Control Channel of the new base station, using the same rate, code rate, and code channel.

- If $PACA_S$ is equal to enabled, the mobile station shall enter the *Update Overhead Information Substate* of the *System Access State* (see 2.6.3) with an origination indication within T_{33m} seconds to re-originate the PACA call using the new base station.

If the NGHBR_CONFIG field is '011', the mobile station shall perform the following:

- Enter the *System Determination Substate* of the *Mobile Station Initialization State* with a new system indication (see 2.6.1.1).

If the NGHBR_CONFIG field is '100', the mobile station shall perform the following:

- The mobile station shall set $ACC\_MSG\_SEQ_S$ and CURR_ACC_MSG_SEQ to NULL (see 2.6.2.2) and shall set $PILOT\_PN_S$ to the pilot offset index of the base station transmitting the new Forward Common Control Channel/Primary Broadcast Control Channel.

- If the stored information for any of the Forward Common Control Channels and Primary Broadcast Control Channel on the associated $NGHBR\_FREQ_S$ of the new base station in NGHBR_REC_LIST of the old base station is current, the mobile station shall perform the following:

  – The mobile station shall use the hash algorithm specified in 2.6.7.1 to select a new Forward Common Control Channel number in the range 1 to NUM_FCCCH_S, where NUM_FCCCH_S is the stored value. The mobile station shall store the new Forward Common Control Channel number as $FCCCH\_ID_S$.

  – If the mobile station has not stored configuration parameters for this new Forward Common Control Channel and Primary Broadcast Control Channel, or if the stored information is not current, the mobile station shall perform the following:

    + The mobile station shall set $CONFIG\_MSG\_SEQ_S$, $A41\_SYS\_PAR\_MSG\_SEQ_S$, $UNI\_NGHBR\_LST\_MSG\_SEQ_S$, $MC\_RR\_PAR\_MSG\_SEQ_S$, $EXT\_GLOB\_SERV\_REDIR\_MSG\_SEQ_S$, $EXT\_CHAN\_LST\_MSG\_SEQ_S$, $FD\_CHAN\_LST\_MSG\_SEQ_S$, $USER\_ZONE\_ID\_MSG\_SEQ_S$, and $PRI\_NGHBR\_LST\_MSG\_SEQ_S$ to NULL.

+ If the associated $NGHBR\_BAND_S$ or $NGHBR\_FREQ_S$ of the new base station in NGHBR_REC_LIST of the old base station is not equal to $CDMABAND_S$ and $CDMACH_S$ respectively, the mobile station shall set $CDMABAND_S$ to $NGHBR\_BAND_S$, $CDMACH_S$ to $NGHBR\_FREQ_S$, and tune to the new CDMA Channel.

+ Then the mobile station shall begin monitoring the Primary Broadcast Control Channel of the new base station, using the same rate, code rate, and code channel.

– If the stored information for this new Forward Common Control Channel and Primary Broadcast Control Channel is current, the mobile station shall perform the following:

+ The mobile station shall set $CONFIG\_MSG\_SEQ_S$ to the stored information for this new Forward Common Control Channel and Primary Broadcast Control Channel and the mobile station shall set NGHBR_REC_LIST to the stored information for this new Forward Common Control Channel and Primary Broadcast Control Channel.

+ If the associated $NGHBR\_BAND_S$ or $NGHBR\_FREQ_S$ of the new base station in NGHBR_REC_LIST of the old base station is not equal to $CDMABAND_S$ and $CDMACH_S$ respectively, the mobile station shall set $CDMABAND_S$ to $NGHBR\_BAND_S$, $CDMACH_S$ to $NGHBR\_FREQ_S$, and tune to the new CDMA Channel. The mobile station shall begin monitoring the new Forward Common Control Channel/Primary Broadcast Control Channel of the new base station.

• If none of the Forward Common Control Channel and Primary Broadcast Control Channel stored information on the associated $NGHBR\_FREQ_S$ of the new base station in NGHBR_REC_LIST of the old base station are current, the mobile station shall perform the following:

– The mobile station shall set $CONFIG\_MSG\_SEQ_S$, $A41\_SYS\_PAR\_MSG\_SEQ_S$, $UNI\_NGHBR\_LST\_MSG\_SEQ_S$, $MC\_RR\_PAR\_MSG\_SEQ_S$, $EXT\_GLOB\_SERV\_REDIR\_MSG\_SEQ_S$, $EXT\_CHAN\_LST\_MSG\_SEQ_S$, $FD\_CHAN\_LST\_MSG\_SEQ_S$, $USER\_ZONE\_ID\_MSG\_SEQ_S$, and $PRI\_NGHBR\_LST\_MSG\_SEQ_S$ to NULL.

– If the associated $NGHBR\_BAND_S$ or $NGHBR\_FREQ_S$ of the new base station in NGHBR_REC_LIST of the old base station is not equal to $CDMABAND_S$ and $CDMACH_S$ respectively, the mobile station shall set $CDMABAND_S$ to $NGHBR\_BAND_S$, $CDMACH_S$ to $NGHBR\_FREQ_S$, and tune to the new CDMA Channel.

– The mobile station shall begin monitoring the Primary Broadcast Control Channel of the new base station, using the same rate, code rate, and code channel.

- If $PACA_S$ is equal to enabled, the mobile station shall enter the *Update Overhead Information Substate* of the *System Access State* (see 2.6.3) with an origination indication within T_{33m} seconds to re-originate the PACA call using the new base station.

2.6.2.1.5 Primary Broadcast Control Channel Monitoring

2.6.2.1.5.1 General Overview

The Broadcast Control Channel is divided into 40, 80, or 160 ms slots called the Broadcast Control Channel slots (see 3.1.3.5 in [2]). The Primary Broadcast Control Channel will be used for control messages. Support for the Primary Broadcast Control Channel is mandatory for mobile stations. The Primary Broadcast Control Channel will operate with the Forward Common Control Channels and the Quick Paging Channels, or only with the Forward Common Control Channels.

After a mobile station acquires and synchronizes with a new base station that supports a Primary Broadcast Control Channel, the mobile station monitors the Primary Broadcast Control Channel to receive overhead information. Once the mobile station has received the updated overhead information from the Primary Broadcast Control Channel, the mobile station may begin to monitor a Forward Common Control Channel or a Quick Paging Channel, if it is supported.

2.6.2.1.5.2 Requirements

If the base station supports the Primary Broadcast Control Channel, the mobile station shall monitor the Primary Broadcast Control Channel for overhead messages. If the mobile station determines that the CONFIG_MSG_SEQ has changed, the mobile station shall monitor the Primary Broadcast Control Channel to receive updated overhead messages.

2.6.2.1.6 System Reselection Procedures

If the mobile station supports more than one operating mode or the Remaining Set/Neighbor Set contains pilots on frequencies different from the current frequency, the mobile station shall enter the *System Determination Substate* of the *Mobile Station Initialization State* with a system reselection indication (see 2.6.1.1) if all of the following are true:

- $RESELECT\_INCLUDED_S$ is equal to '1';
- The following inequality is satisfied:

  $-20 \times \log_{10} (E_C/\mathbf{I_0}) > EC\_I0\_THRESH_S$

  where $E_C/\mathbf{I_0}$ is the measured $E_C/\mathbf{I_0}$ of the active pilot; and
- The following inequality is satisfied:

pilot_power < EC_THRESH_S -115

where *pilot_power* (dBm/1.23 MHz) = $10 \times \log_{10}$ (PS) (dB) + mean input power (dBm/1.23 MHz) and PS is the strength of the active pilot, as specified in 2.6.6.2.2.

2.6.2.1.7 Slotted Timer Expiration

Upon expiration of the slotted T_{MS} Slotted timer, the mobile station shall disable the timer, set $T\_SLOTTED_S$ to T_{74m}, and set $SLOTTED_S$ to YES.

2.6.2.1.8 Exiting the Reduced Slot Cycle Mode

If RSC_MODE_ENABLED is equal to YES, then at the system time specified by RSC_END_TIME, the mobile station shall set RSC_MODE_ENABLED to NO and set $SLOTTED_S$ to YES.

2.6.2.1.9 Radio Environment Report Timer Expiration

Upon expiration of the radio environment report timer, the mobile station shall disable the timer and set RER_MODE_ENABLED to NO. If TKZ_MODE_PENDING is equal to YES, then the mobile station shall perform the following:

- Set TKZ_MODE_ENABLED to YES and TKZ_MODE_PENDING to NO.
- Initialize the tracking zone list (TKZ_LIST) to NULL.
- Enable the tracking zone update timer with an initial value of infinity if $TKZ\_UPDATE\_PRD_S$ is equal to '1111'; otherwise, the mobile station shall enable the tracking zone update timer with an initial value of $2^{TKZ\_UPDATE\_PRD_S + 6}$ seconds.

2.6.2.2 Response to Overhead Information Operation

The overhead messages on the Primary Broadcast Control Channel are:

- *ANSI-41 System Parameters Message*
- *MC-RR Parameters Message*
- *Enhanced Access Parameters Message*
- *Universal Neighbor List Message*
- *User Zone Identification Message*
- *Private Neighbor List Message*
- *Extended Global Service Redirection Message*
- *Extended CDMA Channel List Message*
- *ANSI-41 RAND Message*
- *BCMC Service Parameters Message*
- *Access Point Identification Message*
- *Access Point Identification Text Message*
- *Access Point Pilot Information Message*

- *General Overhead Information Message*
- *Flex Duplex CDMA Channel List Message*
- *Alternative Technologies Information Message*

The overhead messages on the Paging Channel are:

- *System Parameters Message*
- *Access Parameters Message*
- *Neighbor List Message*
- *CDMA Channel List Message*
- *Extended System Parameters Message*
- *Global Service Redirection Message*
- *Extended Neighbor List Message*
- *General Neighbor List Message*
- *User Zone Identification Message*
- *Private Neighbor List Message*
- *Extended Global Service Redirection Message*
- *Extended CDMA Channel List Message*
- *Access Point Identification Message*
- *Access Point Identification Text Message*
- *Access Point Pilot Information Message*
- *General Overhead Information Message*
- *Flex Duplex CDMA Channel List Message*
- *Alternative Technologies Information Message*

The *Response to Overhead Information Operation* is performed whenever the mobile station receives an overhead message. The mobile station updates internally stored information from the received message's data fields.

Configuration parameters and access parameters are received in the configuration messages and the *Access Parameters Message* or the *Enhanced Access Parameters Message*.

The configuration messages on the Primary Broadcast Control Channel are:

- *ANSI-41 System Parameters Message*
- *MC-RR Parameters Message*
- *Universal Neighbor List Message*
- *User Zone Identification Message*
- *Private Neighbor List Message*

- *Extended Global Service Redirection Message*
- *Extended CDMA Channel List Message*
- *Access Point Identification Message*
- *Access Point Identification Text Message*
- *Access Point Pilot Information Message*
- *General Overhead Information Message*
- *Flex Duplex CDMA Channel List Message*
- *Alternative Technologies Information Message*

The configuration messages on the Paging Channel are:

- *System Parameters Message*
- *Neighbor List Message*
- *CDMA Channel List Message*
- *Extended System Parameters Message*
- *Global Service Redirection Message*
- *Extended Neighbor List Message*
- *General Neighbor List Message*
- *User Zone Identification Message*
- *Private Neighbor List Message*
- *Extended Global Service Redirection Message*
- *Extended CDMA Channel List Message*
- *Access Point Identification Message*
- *Access Point Identification Text Message*
- *Access Point Pilot Information Message*
- *General Overhead Information Message*
- *Flex Duplex CDMA Channel List Message*
- *Alternative Technologies Information Message*

Associated with the set of configuration messages sent on each Paging Channel or Primary Broadcast Control Channel is a configuration message sequence number (CONFIG_MSG_SEQ). When the contents of one or more of the configuration messages change, the configuration message sequence number is incremented. For each of the configuration messages received, the mobile station stores the configuration message sequence number contained in the configuration message (A41_SYS_PAR_MSG_SEQ$_S$, MC_RR_PAR_MSG_SEQ$_S$, SYS_PAR_MSG_SEQ$_S$, NGHBR_LST_MSG_SEQ$_S$, AP_PILOT_INFO_MSG_SEQ$_S$, EXT_NGHBR_LST_MSG_SEQ$_S$, GEN_NGHBR_LST_MSG_SEQ$_S$, UNI_NGHBR_LST_MSG_SEQ$_S$, CHAN_LST_MSG_SEQ$_S$,

EXT_SYS_PAR_MSG_SEQ$_S$, GLOB_SERV_REDIR_MSG_SEQ$_S$, USER_ZONE_ID_MSG_SEQ$_S$, EXT_CHAN_LST_MSG_SEQ$_S$, FD_CHAN_LST_MSG_SEQ$_S$, EXT_GLOB_SERV_REDIR_MSG_SEQ$_S$, PRI_NGHBR_LST_MSG_SEQ$_S$, AP_IDT_MSG_SEQ$_S$, AP_ID_TEXT_MSG_SEQ$_S$, GOI_MSG_SEQ$_S$ or ATIM_MSG_SEQ$_S$). The mobile station also stores the most recently received configuration message sequence number (CONFIG_MSG_SEQ$_S$) contained in any message (see 2.6.2.2.1, 2.6.2.2.3, 2.6.2.2.4, 2.6.2.2.5, 2.6.2.2.6, 2.6.2.2.7, 2.6.2.2.8, 2.6.2.2.9, 2.6.2.2.10, 2.6.2.2.11, 2.6.2.2.12, 2.6.2.2.13, 2.6.2.2.14, 2.6.2.2.17, 2.6.2.2.19, 2.6.2.2.20, 2.6.2.2.21, 2.6.2.2.22, 2.6.2.2.23, 2.6.2.2.24 and 2.6.2.3). The mobile station examines the stored values of the configuration message sequence numbers to determine whether the configuration parameters stored by the mobile station are current.

The field EXT_SYS_PARAMETER in the *System Parameters Message*, when set equal to '0', indicates that the base station is not sending the *Extended System Parameters Message*. When the mobile station receives the *System Parameters Message* with the EXT_SYS_PARAMETER field set equal to '0', the mobile station shall set EXT_SYS_PAR_MSG_SEQ$_S$ to CONFIG_MSG_SEQ$_S$ to indicate that the *Extended System Parameters Message* is current.

The field EXT_CHAN_LST in the *System Parameters Message*, when set equal to '0', indicates that the base station is not sending the *Extended CDMA Channel List Message*. When the mobile station receives the *System Parameters Message* with the EXT_CHAN_LST field set equal to '0', the mobile station shall set EXT_CHAN_LST_MSG_SEQ$_S$ to CONFIG_MSG_SEQ$_S$ to indicate that the *Extended CDMA Channel List Message* is current.

The field GEN_NGHBR_LST in the *System Parameters Message*, when set equal to '0', indicates that the base station is not sending the *General Neighbor List Message*. When the mobile station receives the *System Parameters Message* with the GEN_NGHBR_LST field set equal to '0', the mobile station shall set the GEN_NGHBR_LST_MSG_SEQ$_S$ to CONFIG_MSG_SEQ$_S$ to indicate that the *General Neighbor List Message* is current.

The field EXT_NGHBR_LST in the *System Parameters Message*, when set equal to '0', indicates that the base station is not sending the *Extended Neighbor List Message*. When the mobile station receives the *System Parameters Message* with the EXT_NGHBR_LST field set equal to '0', the mobile station shall set EXT_NGHBR_LIST_MSG_SEQ$_S$ to CONFIG_MSG_SEQ$_S$ to indicate that the *Extended Neighbor List Message* is current.

The field GLOBAL_REDIRECT in the *System Parameters Message*, when set equal to '0', indicates that the base station is not sending the *Global Service Redirection Message*. When the mobile station receives the *System Parameters Message* with the GLOBAL_REDIRECT field set equal to '0', the mobile station shall set GLOB_SERV_REDIR_MSG_SEQ$_S$ to CONFIG_MSG_SEQ$_S$ to indicate that the *Global Service Redirection Message* is current.

The field EXT_GLOBAL_REDIRECT in the *System Parameters Message* or *MC-RR Parameters Message*, when set equal to '0', indicates that the base station is not sending the *Extended Global Service Redirection Message*. When the mobile station receives the *System Parameters Message* or *MC-RR Parameters Message* with the

EXT_GLOBAL_REDIRECT field set equal to '0', the mobile station shall set EXT_GLOB_SERV_REDIR_MSG_SEQ$_S$ to CONFIG_MSG_SEQ$_S$ to indicate that the *Extended Global Service Redirection Message* is current.

The field USER_ZONE_ID in the *System Parameters Message* or *MC-RR Parameters Message*, when set equal to '0', indicates that the base station is not sending the *User Zone Identification Message*. When the mobile station receives the *System Parameters Message* or *MC-RR Parameters Message* with the USER_ZONE_ID field set equal to '0', the mobile station shall set USER_ZONE_ID_MSG_SEQ$_S$ to CONFIG_MSG_SEQ$_S$ to indicate that the *User Zone Identification Message* is current.

The field PRI_NGHBR_LST in the *System Parameters Message* or *MC-RR Parameters Message*, when set equal to '0', indicates that the base station is not sending the *Private Neighbor List Message*. When the mobile station receives the *System Parameters Message* or *MC-RR Parameters Message* with the PRI_NGHBR_LST field set equal to '0', the mobile station shall set PRI_NGHBR_LST_MSG_SEQ$_S$ to CONFIG_MSG_SEQ$_S$ to indicate that the *Private Neighbor List Message* is current.

The field ATIM_IND in the *System Parameters Message* or *MC-RR Parameters Message*, when set equal to '0' or if ATIM_IND is omitted, indicates that the base station is not sending the *Alternative Technologies Information Message*. When the mobile station receives the *System Parameters Message* or *MC-RR Parameters Message* with the ATIM_IND field set equal to '0', or if the ATIM_IND field is omitted in the *System Parameters Message* or *MC-RR Parameters Message*, the mobile station shall set ATIM_MSG_SEQ$_S$ to CONFIG_MSG_SEQ$_S$ to indicate that the *Alternative Technologies Information Message* is current.

The field AP_PILOT_INFO in the *System Parameters Message* or *MC-RR Parameters Message*, when set equal to '0' or if AP_PILOT_INFO is omitted, indicates that the base station is not sending the *Access Point Pilot Information Message*. When the mobile station receives the *System Parameters Message* or *MC-RR Parameters Message* with the AP_PILOT_INFO field set equal to '0', or if the AP_PILOT_INFO field is omitted in the *System Parameters Message* or *MC-RR Parameters Message*, the mobile station shall set AP_PILOT_INFO_MSG_SEQ$_S$ to CONFIG_MSG_SEQ$_S$ to indicate that the *Access Point Pilot Information Message* is current.

The field AP_IDT in the *System Parameters Message* or *MC-RR Parameters Message*, when set equal to '0' or if AP_IDT is omitted, indicates that the base station is not sending the *Access Point Identification Message*. When the mobile station receives the *System Parameters Message* or *MC-RR Parameters Message* with the AP_IDT field set equal to '0', or if the field AP_IDT is omitted in the *System Parameters Message* or *MC-RR Parameters Message*, the mobile station shall set AP_IDT_MSG_SEQ$_S$ to CONFIG_MSG_SEQ$_S$ to indicate that the *Access Point Identification Message* is current.

The field AP_ID_TEXT in the *System Parameters Message* or *MC-RR Parameters Message*, when set equal to '0' or if AP_ID_TEXT is omitted, indicates that the base station is sending the *Access Point Identification Text Message*. When the mobile station receives the *System Parameters Message* or *MC-RR Parameters Message* with the AP_ID_TEXT field set equal to '0', or if the field AP_ID_TEXT is omitted in the *System Parameters Message* or *MC-RR Parameters Message*, the mobile station shall set AP_ID_TEXT_MSG_SEQ$_S$ to

CONFIG_MSG_SEQ$_S$ to indicate that the *Access Point Identification Text Message* is current.

The field GEN_OVHD_INF_IND in the *System Parameters Message* or *MC-RR Parameters Message*, when set equal to '0' or if GEN_OVHD_INF_IND is omitted, indicates that the base station is not sending the *General Overhead Information Message*. When the mobile station receives the *System Parameters Message* or *MC-RR Parameters Message* with the GEN_OVHD_INF_IND field set equal to '0', or if the GEN_OVHD_INF_IND field is omitted in the *System Parameters Message* or *MC-RR Parameters Message*, the mobile station shall set GOI_MSG_SEQ$_S$ to CONFIG_MSG_SEQ$_S$ to indicate that the *General Overhead Information Message* is current.

The field FD_CHAN_LST_IND in the *System Parameters Message* or *MC-RR Parameters Message*, when set equal to '0' or if FD_CHAN_LST_IND is omitted, indicates that the base station is not sending the *Flex Duplex CDMA Channel List Message*. When the mobile station receives the *System Parameters Message* or *MC-RR Parameters Message* with the FD_CHAN_LST_IND field set equal to '0', or if the FD_CHAN_LST_MSG_SEQ$_S$ field is omitted in the *System Parameters Message* or *MC-RR Parameters Message*, the mobile station shall set FD_CHAN_LST_MSG_SEQ$_S$ to CONFIG_MSG_SEQ$_S$ to indicate that the *Flex Duplex CDMA Channel List Message* is current.

The configuration message sequence number is also included in the *General Page Message* and the *Universal Page Message*. This allows the mobile station to determine whether the stored configuration parameters are current without waiting for a configuration message.

Access Parameters Messages or *Enhanced Access Parameters Messages* are independently sequence-numbered by the ACC_MSG_SEQ field. The mobile station stores the most recently received *Access Parameters Message* or *Enhanced Access Parameters Messages* sequence number (ACC_MSG_SEQ$_S$).

Paging Channels, Broadcast Control Channels, and Forward Common Control Channels shall be considered different if they are transmitted by different base stations, if they are transmitted on different code channels, or if they are transmitted on different CDMA Channels. Configuration and access parameters from one Paging Channel or Primary Broadcast Control Channel shall not be used while monitoring a different Paging Channel or Primary Broadcast Control Channel/Forward Common Control Channel except for registration and authentication parameters while the mobile station is performing an access probe handoff or access handoff. The mobile station shall ignore any overhead message whose PILOT_PN$_r$ field is not equal to the pilot offset index (PILOT_PN$_S$) of the base station whose Paging Channel or Primary Broadcast Control Channel is being monitored.

The mobile station may store the configuration parameters from Paging Channels or Primary Broadcast Control Channel it has recently monitored. When a mobile station starts monitoring a Paging Channel or a Primary Broadcast Control Channel/Forward Common Control Channel that it has recently monitored, the mobile station can determine whether the stored parameters are current by examining the CONFIG_MSG_SEQ$_S$ in a configuration message or a page message.

The mobile station shall use a special value, NULL, to be stored in place of sequence numbers for messages that have not been received or are marked as not current. The special value NULL shall be unequal to any valid message sequence number.

The mobile station shall consider the stored configuration parameters to be current only if all of the following conditions are true:

- If the mobile station is monitoring the Paging Channel, the following stored configuration message sequence numbers ($SYS\_PAR\_MSG\_SEQ_S$, $NGHBR\_LST\_MSG\_SEQ_S$, $EXT\_NGHBR\_LST\_MSG\_SEQ_S$, $CHAN\_LST\_MSG\_SEQ_S$, $EXT\_SYS\_PAR\_MSG\_SEQ_S$, $GEN\_NGHBR\_LST\_MSG\_SEQ_S$, $AP\_IDT\_MSG\_SEQ_S$, $AP\_ID\_TEXT\_MSG\_SEQ_S$, $USER\_ZONE\_ID\_MSG\_SEQ_S$, $PRI\_NGHBR\_LST\_MSG\_SEQ_S$, $EXT\_CHAN\_LST\_MSG\_SEQ_S$, $EXT\_GLOB\_SERV\_REDIR\_MSG\_SEQ_S$ and $GLOB\_SERV\_REDIR\_MSG\_SEQ_S$) are equal to $CONFIG\_MSG\_SEQ_S$; and

- If the mobile station is monitoring the Forward Common Control Channel/ Primary Broadcast Control Channel, the following stored configuration message sequence numbers ($A41\_SYS\_PAR\_MSG\_SEQ_S$, $MC\_RR\_PAR\_MSG\_SEQ_S$, $UNI\_NGHBR\_LST\_MSG\_SEQ_S$, $AP\_IDT\_MSG\_SEQ_S$, $AP\_ID\_TEXT\_MSG\_SEQ_S$, $USER\_ZONE\_ID\_MSG\_SEQ_S$, $PRI\_NGHBR\_LST\_MSG\_SEQ_S$, $EXT\_CHAN\_LST\_MSG\_SEQ_S$, $FD\_CHAN\_LST\_MSG\_SEQ_S$, and $EXT\_GLOB\_SERV\_REDIR\_MSG\_SEQ_S$) are equal to $CONFIG\_MSG\_SEQ_S$; and

- If the mobile station supports flexible spacing between forward and reverse channels, stored configuration message sequence number $FD\_CHAN\_LST\_MSG\_SEQ_S$ is equal to $CONFIG\_MSG\_SEQ_S$; and

- $CONFIG\_MSG\_SEQ_S$ is not equal to NULL; and

- No more than T_{31m} seconds (see Annex D) have elapsed since the mobile station last received a valid message on the Paging Channel or the Primary Broadcast Control Channel/Forward Common Control Channel for which the parameters were stored.

If the configuration parameters are not current, the mobile station shall process the stored parameters upon receipt of the configuration messages as described in 2.6.2.2.1, 2.6.2.2.3, 2.6.2.2.4, 2.6.2.2.5, 2.6.2.2.6, 2.6.2.2.7, 2.6.2.2.8, 2.6.2.2.9, 2.6.2.2.10, 2.6.2.2.11, 2.6.2.2.12, 2.6.2.2.13, 2.6.2.2.14, 2.6.2.2.17, 2.6.2.2.19, 2.6.2.2.20, 2.6.2.2.21, 2.6.2.2.22, 2.6.2.2.23 and 2.6.2.2.24.

2.6.2.2.1 System Parameters Message

Whenever a *System Parameters Message* is received on the Paging Channel, the configuration message sequence number, $CONFIG\_MSG\_SEQ_r$, shall be compared to that stored in $SYS\_PAR\_MSG\_SEQ_S$. If the comparison results in a match, the mobile station may ignore the message. If the comparison results in a mismatch, then the mobile station shall process the remaining fields in the message as described in 2.6.2.2.1.1, 2.6.2.2.1.2, 2.6.2.2.1.3, 2.6.2.2.1.4, 2.6.2.2.1.5, 2.6.2.2.1.6, 2.6.2.2.1.7, 2.6.2.2.1.8, and 2.6.2.2.1.9.

If PAGE_CHAN, REG_PRD, BASE_LAT, BASE_LONG, or PWR_REP_THRESH are not within the valid ranges specified in 3.7.2.3.2.1, then the mobile station shall ignore the *System Parameters Message* that contains them.

If BAND_CLASS is equal to '00001' and if $EXT\_SYS\_PARAMETERS_r$ is not equal to '1', the mobile station shall ignore the *System Parameters Message* containing these fields.

2.6.2.2.1.1 Stored Parameters

The mobile station shall store the following parameters:

- Configuration message sequence number ($CONFIG\_MSG\_SEQ_s = CONFIG\_MSG\_SEQ_r$, $SYS\_PAR\_MSG\_SEQ_s = CONFIG\_MSG\_SEQ_r$)
- Base station identification ($BASE\_ID_s = BASE\_ID_r$)
- Base station class ($BASE\_CLASS_s = BASE\_CLASS_r$)
- Maximum slot cycle index ($MAX\_SLOT\_CYCLE\_INDEX_s = MAX\_SLOT\_CYCLE\_INDEX_r$)
- Home registration indicator ($HOME\_REG_s = HOME\_REG_r$)
- SID roamer registration indicator ($FOR\_SID\_REG_s = FOR\_SID\_REG_r$)
- NID roamer registration indicator ($FOR\_NID\_REG_s = FOR\_NID\_REG_r$)
- Power-up registration indicator ($POWER\_UP\_REG_s = POWER\_UP\_REG_r$)
- Power-down registration indicator ($POWER\_DOWN\_REG_s = POWER\_DOWN\_REG_r$)
- Parameter-change registration indicator ($PARAMETER\_REG_s = PARAMETER\_REG_r$)
- Search window size for the Active Set and Candidate Set ($SRCH\_WIN\_A_s = SRCH\_WIN\_A_r$)
- Search window size for the Neighbor Set ($SRCH\_WIN\_N_s = SRCH\_WIN\_N_r$)
- Search window size for the Remaining Set ($SRCH\_WIN\_R_s = SRCH\_WIN\_R_r$)
- Maximum age for retention of Neighbor Set members ($NGHBR\_MAX\_AGE_s = NGHBR\_MAX\_AGE_r$)
- Power control reporting threshold ($PWR\_REP\_THRESH_s = PWR\_REP\_THRESH_r$)
- Power control reporting frame count ($PWR\_REP\_FRAMES_s = PWR\_REP\_FRAMES_r$)
- Threshold report mode indicator ($PWR\_THRESH\_ENABLE_s = PWR\_THRESH\_ENABLE_r$)
- Periodic report mode indicator ($PWR\_PERIOD\_ENABLE_s = PWR\_PERIOD\_ENABLE_r$).
- Power report delay ($PWR\_REP\_DELAY_s = PWR\_REP\_DELAY_r$)
- Pilot detection threshold ($T\_ADD_s = T\_ADD_r$)
- Pilot drop threshold ($T\_DROP_s = T\_DROP_r$)

- Active Set versus Candidate Set comparison threshold ($T\_COMP_s = T\_COMP_r$)
- Drop timer value ($T\_TDROP_s = T\_TDROP_r$)
- Drop timer range value ($T\_TDROP\_RANGE_s = T\_TDROP\_RANGE_r$) if $T\_TDROP\_RANGE\_INCL_r$ is equal to '1'; otherwise, $T\_TDROP\_RANGE_s$ = '0000'
- *Extended System Parameters Message* sent ($EXT\_SYS\_PARAMETER_s = EXT\_SYS\_PARAMETER_r$)
- *Global Service Redirection Message* sent ($GLOBAL\_REDIRECT_s = GLOBAL\_REDIRECT_r$)
- *Extended Global Service Redirection Message* sent ($EXT\_GLOBAL\_REDIRECT_s = EXT\_GLOBAL\_REDIRECT_r$)
- *Extended Neighbor List Message* sent ($EXT\_NGHBR\_LST_s = EXT\_NGHBR\_LST_r$)
- *General Neighbor List Message* sent ($GEN\_NGHBR\_LST_s = GEN\_NGHBR\_LST_r$)
- *User Zone Identification Message* sent ($USER\_ZONE\_ID_s = USER\_ZONE\_ID_r$)
- *Private Neighbor List Message* sent ($PRI\_NGHBR\_LST_s = PRI\_NGHBR\_LST_r$)
- *Extended CDMA Channel List Message* sent ($EXT\_CHAN\_LST_s = EXT\_CHAN\_LST_r$)
- If $NEG\_SLOT\_CYCLE\_INDEX\_SUP_r$ is included and equal to ‘1’, the mobile station shall set MIN_SLOT_CYCLE_INDEX to -4; otherwise, the mobile station shall set MIN_SLOT_CYCLE_INDEX to 0.
- *Call Recovery Request Message* supported indicator ($CRRM\_MSG\_IND_s = CRRM\_MSG\_IND_r$).

The mobile station shall also store the following parameters:

- If the mobile station is not in the *Origination Attempt Substate*, or *Page Response Substate*, the mobile station shall store the following prior to storing the remaining parameters:
  - Registered system identification ($REG\_SID_s = SID_s$).
  - Registered network identification ($REG\_NID_s = NID_s$).
  - Registered registration zone ($REG\_REG\_ZONE_s = REG\_ZONE_s$).
  - Registered zone timer length ($REG\_ZONE\_TIMER_s = ZONE\_TIMER_r$).
- System identification ($SID_s = SID_r$)
- Network identification ($NID_s = NID_r$)
- Registration zone ($REG\_ZONE_s = REG\_ZONE_r$)
- Number of registration zones to be retained ($TOTAL\_ZONES_s = TOTAL\_ZONES_r$)

- Zone timer length ($ZONE\_TIMER_s = ZONE\_TIMER_r$)
- Multiple SID storage indicator ($MULT\_SIDS_s = MULT\_SIDS_r$)
- Multiple NID storage indicator ($MULT\_NIDS_s = MULT\_NIDS_r$)
- Registration period ($REG\_PRD_s = REG\_PRD_r$)
- Base station latitude ($BASE\_LAT_s = BASE\_LAT_r$)
- Base station longitude ($BASE\_LONG_s = BASE\_LONG_r$)
- Registration distance ($REG\_DIST_s = REG\_DIST_r$)
- Base station horizontal location uncertainty ($LOC\_UNC\_H_s = LOC\_UNC\_H_r$)
- Base station height ($HEIGHT_s = HEIGHT_r$)
- Base station verticl location uncertainty ($LOC\_UNC\_ V_s = LOC\_UNC\_V_r$)

If $EXT\_SYS\_PARAMETER_s$ is equal to '0', then the mobile station shall perform the following:

- Set $EXT\_SYS\_PAR\_MSG\_SEQ_s$ to $CONFIG\_MSG\_SEQ_s$,
- Set $BCAST\_INDEX_s$ to $MAX\_SLOT\_CYCLE\_INDEX_s$,
- Set IMSI_O to IMSI_M by setting $IMSI\_O\_S_s$ to $IMSI\_M\_S_p$ (i.e., setting $IMSI\_O\_S1_s$ to $IMSI\_M\_S1_p$ and $IMSI\_O\_S2_s$ to $IMSI\_M\_S2_p$), MCC_O_s to MCC_M_p, $IMSI\_O\_11\_12_s$ to $IMSI\_M\_11\_12_p$, and $IMSI\_O\_ADDR\_NUM_s$ to $IMSI\_M\_ADDR\_NUM_p$,
- Set $RESELECT\_INCLUDED_s$ to '0',
- For Band Class 0, if the mobile station determines it is operating in Korea, set P_REV_s to '00000010'; otherwise, set P_REV_s to '00000011'. For Band Class 3, set P_REV_s to '00000011'. For Band Class 1 and Band Class 4, set P_REV_s to '00000001', and
- Set $P\_REV\_IN\_USE_s$ to the lesser value of P_REV_s and $MOB\_P\_REV_p$ of the current band class.

If $EXT\_CHAN\_LST_s$ is equal to '0', then the mobile station shall set $EXT\_CHAN\_LST\_MSG\_SEQ_s$ to $CONFIG\_MSG\_SEQ_s$.

If $GLOBAL\_REDIRECT_s$ is equal to '0', then the mobile station shall set $GLOB\_SERV\_REDIR\_MSG\_SEQ_s$ to $CONFIG\_MSG\_SEQ_s$.

If $EXT\_GLOBAL\_REDIRECT_s$ is equal to '0', then the mobile station shall set $EXT\_GLOB\_SERV\_REDIR\_MSG\_SEQ_s$ to $CONFIG\_MSG\_SEQ_s$.

If $EXT\_NGHBR\_LST_s$ is equal to '0', then the mobile station shall set $EXT\_NGHBR\_LST\_MSG\_SEQ_s$ to $CONFIG\_MSG\_SEQ_s$.

If $GEN\_NGHBR\_LST_s$ is equal to '0', then the mobile station shall perform the following:

- Set $GEN\_NGHBR\_LST\_MSG\_SEQ_s$ to $CONFIG\_MSG\_SEQ_s$.
- Set the SRCH_WIN_NGHBR field of NGHBR_REC to $SRCH\_WIN\_N_s$ for all entries.

- Set the SRCH_OFFSET_NGHBR field of NGHBR_REC to '000' for all entries.
- Set the TIMING_INCL field of NGHBR_REC to '0' for all entries.
- Set $RESQ\_ENABLED_S$ to '0'.
- Set the NGHBR_RESQ_CONFIGURED field of NGHBR_REC to '0' for all entries.
- If $EXT\_NGHBR\_LST_S$ is equal to '0':
  - Set the SEARCH_PRIORITY field of the NGHBR_REC to '10' (high) for all entries.
  - Set the NGHBR_BAND field of the NGHBR_REC to $CDMABAND_S$ for all entries.
  - Set the NGHBR_FREQ field of the NGHBR_REC to $CDMACH_S$ for all entries.

If $GEN\_NGHBR\_LST_S$ is equal to '1', $GEN\_NGHBR\_LST\_MSG\_SEQ_S$ is equal to $CONFIG\_MSG\_SEQ_S$, and SETTING_SEARCH_WIN is equal to '1', the mobile station shall perform the following:

- Set the SRCH_WIN_NGHBR field of each NGHBR_REC to $SEARCH\_WIN\_N_S$ for all $NGHBR\_SET\_SIZE_S$ entries.
- Set SETTING_SEARCH_WIN to '0'.

If $USER\_ZONE\_ID_S$ is equal to '0', then the mobile station shall perform the following:

- Set $USER\_ZONE\_ID\_MSG\_SEQ_S$ to $CONFIG\_MSG\_SEQ_S$.
- Set the UZID field of the UZ_REC to '0000000000000000' for all entries.
- Set the UZ_REV field of the UZ_REC to '0000' for all entries.
- Set the TEMP_SUB field of the UZ_REC to '0' for all entries.

If $USER\_ZONE\_ID_S$ is equal to '1' and the mobile station does not support Tiered Services, then the mobile station shall set $USER\_ZONE\_ID\_MSG\_SEQ_S$ to $CONFIG\_MSG\_SEQ_S$.

If $PRI\_NGHBR\_LST_S$ is equal to '0', then the mobile station shall set $PRI\_NGHBR\_LST\_MSG\_SEQ_S$ to $CONFIG\_MSG\_SEQ_S$.

If $PRI\_NGHBR\_LST_S$ is equal to '1' and the mobile station does not support Tiered Services, then the mobile station shall set $PRI\_NGHBR\_LST\_MSG\_SEQ_S$ to $CONFIG\_MSG\_SEQ_S$.

The mobile station shall also store the following parameters:

- *Access Point Pilot Information Message* sent ($AP\_PILOT\_INFO_S = AP\_PILOT\_INFO_r$) if included; otherwise, $AP\_PILOT\_INFO_S$ = '0'

  If the APPIM_PERIOD_INDEX is included in the message $APPIM\_PERIOD\_INDEX_S = APPIM\_PERIOD\_INDEX_r$. Otherwise, $APPIM\_PERIOD\_INDEX_S = 0$.

- *Access Point Identification Message* sent ($AP\_IDT_S = AP\_IDT_r$) if included; otherwise, AP_IDT_S = '0'
- *Access Point Identification Text Message* sent ($AP\_ID\_TEXT_S = AP\_ID\_TEXT_r$) if included; otherwise, $AP\_ID\_TEXT_S$ = '0'

- *General Overhead Information Message* sent ($GEN\_OVHD\_INF\_IND_s = GEN\_OVHD\_INF\_IND_r$) if included; otherwise, $GEN\_OVHD\_INF\_IND_s$ = '0'

  If the GEN_OVHD_CYCLE_INDEX is included in the message $GEN\_OVHD\_CYCLE\_INDEX_s = GEN\_OVHD\_CYCLE\_INDEX_r$. Otherwise, $GEN\_OVHD\_CYCLE\_INDEX_s = 0$.

- *Flex Duplex CDMA Channel List Message* sent ($FD\_CHAN\_LST\_IND_s = FD\_CHAN\_LST\_IND_r$) if included; otherwise, $FD\_CHAN\_LST\_IND_s$ = '0'.

- *Alternative Technologies Information Message* sent ($ATIM\_IND_s = ATIM\_IND_r$) if included; otherwise, $ATIM\_IND_s$ = '0'

  If the ATIM_CYCLE_INDEX is included in the message $ATIM\_CYCLE\_INDEX_s = ATIM\_CYCLE\_INDEX_r$. Otherwise, $ATIM\_CYCLE\_INDEX_s = 0$.

The mobile station shall ignore any fields at the end of the *System Parameters Message* that are not defined according to the protocol revision level ($MOB\_P\_REV_p$ of the current band class) being used by the mobile station.

2.6.2.2.1.2 Paging Channel Assignment Change

If the number of Paging Channels specified in the *System Parameters Message* ($PAGE\_CHAN_r$) is different from $PAGE\_CHAN_s$, the mobile station shall use the hash algorithm specified in 2.6.7.1 to select a new Paging Channel number in the range 1 to $PAGE\_CHAN_r$. The mobile station shall store the new Paging Channel number as $PAGECH_s$. The mobile station shall then set $PAGE\_CHAN_s$ to $PAGE\_CHAN_r$. The mobile station shall set $ACC\_MSG\_SEQ_s$ to NULL. If the mobile station has not stored configuration parameters for the new Paging Channel, or if the stored parameters are not current (see 2.6.2.2), the mobile station shall set $CONFIG\_MSG\_SEQ_s$, $SYS\_PAR\_MSG\_SEQ_s$, $NGHBR\_LST\_MSG\_SEQ_s$, $EXT\_NGHBR\_LST\_MSG\_SEQ_s$, $GEN\_NGHBR\_LST\_MSG\_SEQ_s$, $CHAN\_LST\_MSG\_SEQ_s$, $EXT\_SYS\_PAR\_MSG\_SEQ_s$, $USER\_ZONE\_ID\_MSG\_SEQ_s$, $PRI\_NGHBR\_LST\_MSG\_SEQ_s$, and $EXT\_GLOB\_SERV\_REDIR\_MSG\_SEQ_s$, $EXT\_CHAN\_LST\_MSG\_SEQ_s$, $FD\_CHAN\_LST\_MSG\_SEQ_s$, and $GLOB\_SERV\_REDIR\_MSG\_SEQ_s$ to NULL. The mobile station shall then begin monitoring the new Paging Channel as specified in 2.6.2.1.1.

2.6.2.2.1.3 RESCAN Parameter

If the $RESCAN_r$ field in the *System Parameters Message* equals '1', the mobile station shall enter the *System Determination Substate* of the *Mobile Station Initialization State* with a rescan indication (see 2.6.1.1).

2.6.2.2.1.4 Roaming Status

The mobile station shall determine the roaming status for the mobile station (see 2.6.5.3). The mobile station should indicate to the user whether the mobile station is roaming.

2.6.2.2.1.5 Registration

The mobile station shall update stored variables and perform other registration procedures as specified in 2.6.5.5.2.2.

2.6.2.2.1.6 Slot Cycle Index

The mobile station shall set $SLOT\_CYCLE\_INDEX_S$ to :

$$\max\begin{pmatrix} MIN\_SLOT\_CYCLE\_INDEX_S, \\ \min\left(SLOT\_CYCLE\_INDEX\_REG, MAX\_SLOT\_CYCLE\_INDEX_S\right) \end{pmatrix}.$$

Where, SLOT_CYCLE_INDEX_REG is computed based on the slot cycle index value included in the last registration attempt (see 2.6.5.5.3.1 and 2.6.5.5.3.2).

If the mobile station is operating in the slotted mode, it shall set its slot cycle length as described in 2.6.2.1.1.3.

2.6.2.2.1.7 PACA Disable for SID Change

If $PACA_S$ is equal to enabled, and SID_S is not equal to $PACA\_SID_S$, the mobile station shall set $PACA_S$ to disabled and PACA_CANCEL to ‘0’, shall disable the PACA state timer, and should indicate to the user that the PACA call has been canceled.

2.6.2.2.1.8 Retry Delay Disable for Packet Zone ID or SID/NID Change

The mobile station shall set $RETRY\_DELAY_S$[RETRY_TYPE] to 0 when the mobile station determines that the Packet Zone Identification or the System Identification/Network Identification (SID/NID pair) has been changed, where RETRY_TYPE is equal to ‘001’, ‘010’, ‘011’, ‘100’, or ‘101’.

2.6.2.2.1.9 Encryption key reset for SID/NID Change

When the mobile station determines that the System Identification/Network Identification (SID/NID pair) has been changed, it shall perform the following:

- The mobile station shall disable the key setup timer if the timer is running.
- If there is an entry in the mobile station’s $SID\_NID\_LIST_S$ that matches the previous SID/NID pair, the mobile station shall perform the following:
  - The mobile station shall save the following encryption/integrity related parameters associated with previous SID/NID pair:
    - KEY_ID,
    - ENC_KEY[KEY_ID] and INT_KEY[KEY_ID],
    - TX_EXT_SSEQ[0][KEY_ID], TX_EXT_SSEQ[1][KEY_ID], RX_EXT_SSEQ[0][KEY_ID], and RX_EXT_SSEQ[1][KEY_ID] and
    - $C\_SIG\_ENCRYPT\_MODE_S$.

- If there are more than one SID/NID pairs in the $SID\_NID\_LIST_S$ for which there are assocated encryption/integrity related parameters saved, the mobile station may remove the parameters associated with the SID/NID pair that was visited at the earliest time.

- If there is an entry in the mobile station's $SID\_NID\_LIST_S$ that matches the base station's SID and NID and the following encryption/integrity related parameters last used in that system (SID/NID pair) are stored in the mobile station, the mobile station shall restore them:
  - KEY_ID,
  - ENC_KEY[KEY_ID] and INT_KEY[KEY_ID],
  - TX_EXT_SSEQ[0][KEY_ID], TX_EXT_SSEQ[1][KEY_ID], RX_EXT_SSEQ[0][KEY_ID], and RX_EXT_SSEQ[1][KEY_ID] and
  - $C\_SIG\_ENCRYPT\_MODE_S$.
- Otherwise, the mobile station shall set ENC_KEY['00'], ENC_KEY['01'], INT_KEY['00'], and INT_KEY['01'] to NULL.

2.6.2.2.2 Access Parameters Message

Whenever an *Access Parameters Message* is received on the Paging Channel, the sequence number, $ACC\_MSG\_SEQ_r$, shall be compared to $ACC\_MSG\_SEQ_S$. If the comparison results in a match, the mobile station may ignore the message. If the comparison results in a mismatch, then the mobile station shall process the remaining fields in the message as follows.

If PROBE_PN_RAN, MAX_REQ_SEQ, or MAX_RSP_SEQ are not within the valid ranges specified in 3.7.2.3.2.2, then the mobile station shall ignore the *Access Parameters Message* that contains them.

The mobile station shall store the following parameters:

- *Access Parameters Message* sequence number ($ACC\_MSG\_SEQ_S = ACC\_MSG\_SEQ_r$)
- Number of Access Channels ($ACC\_CHAN_S = ACC\_CHAN_r$)
- Nominal transmit power offset ($NOM\_PWR_S = NOM\_PWR_r$)
- Initial power offset for access ($INIT\_PWR_S = INIT\_PWR_r$)
- Power increment ($PWR\_STEP_S = PWR\_STEP_r$)
- Number of access probes ($NUM\_STEP_S = NUM\_STEP_r$)
- Maximum Access Channel message capsule size ($MAX\_CAP\_SZ_S = MAX\_CAP\_SZ_r$)
- Access Channel preamble length ($PAM\_SZ_S = PAM\_SZ_r$)
- Persistence modifier for Access Channel attempts for registrations which are not responses to the *Registration Request Order* ($REG\_PSIST_S = REG\_PSIST_r$)

- Persistence modifier for Access Channel attempts for message transmissions ($MSG\_PSIST_s = MSG\_PSIST_r$)
- If $PSIST\_EMG\_INCL_r$ is equal to '0', the mobile station shall set the persistence modifier for emergency calls from mobile stations in access overload classes 0 to 9 ($PSIST\_EMG_s$) to '000'; otherwise, the mobile station shall set $PSIST\_EMG_s$ equal to $PSIST\_EMG_r$.
- Time randomization for Access Channel probes ($PROBE\_PN\_RAN_s = PROBE\_PN\_RAN_r$)
- Acknowledgment timeout ($ACH\_ACC\_TMO_s = ACC\_TMO_r$)
- Access Channel probe backoff range ($PROBE\_BKOFF_s = PROBE\_BKOFF_r$)
- Access Channel probe sequence backoff range ($BKOFF_s = BKOFF_r$)
- Maximum number of probe sequences for an Access Channel request ($MAX\_REQ\_SEQ_s = MAX\_REQ\_SEQ_r$)
- Maximum number of probe sequences for an Access Channel response ($MAX\_RSP\_SEQ_s = MAX\_RSP\_SEQ_r$)
- If $CDMABAND_s$ is equal to '0', the mobile station shall set extended nominal transmit power $NOM\_PWR\_EXT_s$ to '0'; otherwise, the mobile station shall store extended nominal transmit power ($NOM\_PWR\_EXT_s = NOM\_PWR\_EXT_r$).
- IC threshold ($IC\_THRESH_s = -7$)

The mobile station shall also store the following parameters:

- Authentication mode (if $AUTH_r$ is equal to '00' or '01', then $AUTH_s = AUTH_r$; otherwise $AUTH_s$ = '01')
- Random challenge value ($RAND_s = RAND_r$)

The mobile station shall ignore any fields at the end of the *Access Parameters Message* which are not defined according to the protocol revision level ($MOB\_P\_REV_p$ of the current band class) being used by the mobile station.

The mobile station shall store the persistence parameter number according to the following rule: If the mobile station's access overload class is in the range 0-9, set $PSIST_s$ equal to $PSIST(0\text{-}9)_r$; otherwise set $PSIST_s$ equal to $PSIST(n)_r$, where n is equal to the mobile station access overload class.

The mobile station shall store the Access Control based on Call Type (ACCT) information as follows:

- Set ACCT_SO_LIST to NULL.
- Set ACCT_SO_GRP_LIST to NULL.
- If $ACCT\_INCL_r$ is equal to '1' and $ACCOLC_p$ is in the range 0 to 9, then the mobile station shall perform the following:
  - Set $ACCT\_INCL\_EMG_s$ to $ACCT\_INCL\_EMG_r$.

- If $ACCT\_SO\_INCL_r$ is equal to '1', then for each $ACCT\_SO_r$ included in this message:
  - If $ACCT\_AOC\_BITMAP\_INCL_r$ is equal to '0', or if $ACCT\_AOC\_BITMAP\_INCL_r$ is equal to '1' and the bit in the associated $ACCT\_AOC\_BITMAP1_r$ corresponding to the mobile station's $ACCOLC_p$ (see Table 3.7.2.3.2.2-1) is equal to '1', then add $ACCT\_SO_r$ to ACCT_SO_LIST.
- If $ACCT\_SO\_GRP\_INCL_r$ is equal to '1', then for each $ACCT\_SO\_GRP_r$ included in this message:
  - If $ACCT\_AOC\_BITMAP\_INCL_r$ is equal to '0', or if $ACCT\_AOC\_BITMAP\_INCL_r$ is equal to '1' and the bit in the associated $ACCT\_AOC\_BITMAP2_r$ corresponding to the mobile station's $ACCOLC_p$ (see Table 3.7.2.3.2.2-1) is equal to '1', then add $ACCT\_SO\_GRP_r$ to ACCT_SO_GRP_LIST.

The mobile station shall set CURR_ACC_MSG_SEQ equal to $ACC\_MSG\_SEQ_s$.

2.6.2.2.3 Neighbor List Message

Whenever a valid *Neighbor List Message* is received on the current Paging Channel ($PAGECH_s$), the configuration message sequence number, $CONFIG\_MSG\_SEQ_r$, shall be compared to that stored in $NGHBR\_LST\_MSG\_SEQ_s$. If the comparison results in a match, the mobile station may ignore the message. If the comparison results in a mismatch, then the mobile station shall process the remaining fields in the message as follows.

If the PILOT_INC field is not within the valid range specified in 3.7.2.3.2.3, then the mobile station shall ignore the *Neighbor List Message* that contains it.

The mobile station shall store the following parameters:

- Configuration message sequence number ($CONFIG\_MSG\_SEQ_s = CONFIG\_MSG\_SEQ_r$, $NGHBR\_LST\_MSG\_SEQ_s = CONFIG\_MSG\_SEQ_r$)
- Pilot PN sequence offset increment ($PILOT\_INC_s = PILOT\_INC_r$)

The mobile station shall set $NGHBR\_SET\_SIZE_s$ to the number of neighboring base stations contained in the *Neighbor List Message*.

For each of the neighboring base stations contained in the *Neighbor List Message*, the mobile station shall perform the following:

- If the ith occurrence of $NGHBR\_CONFIG_r$ is equal to '000', '001', or '010', set the NGHBR_CONFIG field of NGHBR_REC[i] to the ith occurrence of $NGHBR\_CONFIG_r$; otherwise, set the NGHBR_CONFIG field of NGHBR_REC [i] to '011'.
- Set the NGHBR_PN field of NGHBR_REC [i] to the ith occurrence of $NGHBR\_PN_r$.

If $GEN\_NGHBR\_LST\_MSG\_SEQ_s$ is not equal to $CONFIG\_MSG\_SEQ_s$, the mobile station shall perform the following:

- Set the SEARCH_PRIORITY field of the NGHBR_REC to '10' (high) for all $NGHBR\_SET\_SIZE_s$ entries.

- Set the NGHBR_BAND field of NGHBR_REC to $CDMABAND_s$ for all $NGHBR\_SET\_SIZE_s$ entries.
- If $NGHBR\_CONFIG_r$ equals '010', set the NGHBR_FREQ field of NGHBR_REC to the first CDMA Channel listed in the *CDMA Channel List Message or Extended CDMA Channel List Message* transmitted by the current base station for all $NGHBR\_SET\_SIZE_s$ entries; otherwise, set the NGHBR_FREQ field of NGHBR_REC to $CDMACH_s$ for all $NGHBR\_SET\_SIZE_s$ entries.
- Set the SRCH_WIN_NGHBR field of NGHBR_REC to $SRCH\_WIN\_N_s$ for all $NGHBR\_SET\_SIZE_s$ entries.
- Set the SRCH_OFFSET_NGHBR field of NGHBR_REC to '000' for all entries.

The mobile station shall set the ACCESS_ENTRY_HO field of the NGHBR_REC to '0' for all $NGHBR\_SET\_SIZE_s$ entries if any of the following conditions are met:

- $EXT\_SYS\_PARAMETER_s$ is equal to '0',
- $NGHBR\_SET\_ENTRY\_INFO_s$ is equal to '0', or
- $EXT\_SYS\_PAR\_MSG\_SEQ_s$ is not equal to $CONFIG\_MSG\_SEQ_s$.

The mobile station shall set the ACCESS_HO_ALLOWED field of the NGHBR_REC to '0' for all $NGHBR\_SET\_SIZE_s$ entries if any of the following conditions are met:

- $EXT\_SYS\_PARAMETER_s$ is equal to '0',
- $NGHBR\_SET\_ACCESS\_INFO_s$ is equal to '0', or
- $EXT\_SYS\_PAR\_MSG\_SEQ_s$ is not equal to $CONFIG\_MSG\_SEQ_s$.

The mobile station shall update the idle handoff Neighbor Set (see 2.6.2.1.4) so that it consists only of pilot offsets listed in the *Neighbor List Message*. If the *Neighbor List Message* contains more pilot offsets than the mobile station can store, the mobile station shall store the pilot offsets beginning at the start of the *Neighbor List Message*, up to the limits of the mobile station's Neighbor Set storage capacity.

2.6.2.2.4 CDMA Channel List Message

Whenever a *CDMA Channel List Message* is received on the Paging Channel, the configuration message sequence number, $CONFIG\_MSG\_SEQ_r$, shall be compared to that stored in $CHAN\_LST\_MSG\_SEQ_s$. If the comparison results in a match, the mobile station may ignore the message. If the comparison results in a mismatch, then the mobile station shall process the remaining fields in the message as follows.

The mobile station shall store the following parameters:

- Configuration message sequence number ($CONFIG\_MSG\_SEQ_s = CONFIG\_MSG\_SEQ_r$, $CHAN\_LST\_MSG\_SEQ_s = CONFIG\_MSG\_SEQ_r$)

The mobile station shall perform the following:

- If $SYS\_PAR\_MSG\_SEQ_s$, $EXT\_SYS\_PAR\_MSG\_SEQ_s$, and $FD\_CHAN\_LST\_MSG\_SEQ_s$ are current,

- If $EXT\_CHAN\_LST_S$ is equal to '1', the mobile station shall ignore this message.
- If $EXT\_CHAN\_LST_S$ is equal to '0', the mobile station shall process this message as described below.

• Otherwise,

- if the mobile station does not support flexible spacing between forward and reverse channels the mobile station shall process this message after $SYS\_PAR\_MSG\_SEQ_S$ and $EXT\_SYS\_PAR\_MSG\_SEQ_S$ are current.
- Otherwise, the mobile station shall process this message after $SYS\_PAR\_MSG\_SEQ_S$, $EXT\_SYS\_PAR\_MSG\_SEQ_S$, and $FD\_CHAN\_LST\_MSG\_SEQ_S$ become current.

If the $FD\_CHAN\_LST\_SEQ_S$ is current and the mobile station supports at least one bandclass listed by the base station in the *Flex Duplex CDMA Channel List Message*, the mobile station shall ignore this message. Otherwise, mobile station shall process this message as follows:

The mobile station shall use the hash algorithm specified in 2.6.7.1 and the number of channels listed in the *CDMA Channel List Message* to determine the CDMA Channel (Frequency Assignment) for its Paging Channel. If the CDMA Frequency Assignment has changed (the computed CDMA Channel is different from $CDMACH_S$), the mobile station shall perform the following actions:

- Set $CDMACH_S$ to the new CDMA Channel.
- Set $PAGE\_CHAN_S$ to '1'.
- Set $PAGECH_S$ to the Primary Paging Channel.
- If the stored configuration parameters is not current (see 2.6.2.2) for the corresponding base station and frequency assignment, set $CONFIG\_MSG\_SEQ_S$, $SYS\_PAR\_MSG\_SEQ_S$, $NGHBR\_LST\_MSG\_SEQ_S$, $CHAN\_LST\_MSG\_SEQ_S$, $EXT\_NGHBR\_LST\_MSG\_SEQ_S$, $GEN\_NGHBR\_LST\_MSG\_SEQ_S$, $EXT\_SYS\_PAR\_MSG\_SEQ_S$, $GLOB\_SERV\_REDIR\_MSG\_SEQ_S$, $USER\_ZONE\_ID\_MSG\_SEQ_S$, $PRI\_NGHBR\_LST\_MSG\_SEQ_S$, $EXT\_CHAN\_LST\_MSG\_SEQ_S$, $FD\_CHAN\_LST\_MSG\_SEQ_S$, $EXT\_GLOB\_SERV\_REDIR\_MSG\_SEQ_S$, and $ACC\_MSG\_SEQ_S$ to NULL.
- Tune to the new CDMA Channel.

2.6.2.2.5 Extended System Parameters Message

Whenever an *Extended System Parameters Message* is received on the Paging Channel, the configuration message sequence number, $CONFIG\_MSG\_SEQ_r$, shall be compared to that stored in $EXT\_SYS\_PAR\_MSG\_SEQ_S$. If the comparison results in a match, the mobile station may ignore the message. If the comparison results in a mismatch, then the mobile station shall process the remaining fields in the message as follows.

If the protocol revision level supported by the mobile station ($MOB\_P\_REV_p$) is less than the minimum protocol revision level supported by the base station ($MIN\_P\_REV_r$), the mobile station shall enter the *System Determination Substate* of the *Mobile Station*

Initialization State with a protocol mismatch indication (see 2.6.1.1). Otherwise, the mobile station shall store the following parameters:

- Configuration message sequence number ($CONFIG\_MSG\_SEQ_s = CONFIG\_MSG\_SEQ_r$, $EXT\_SYS\_PAR\_MSG\_SEQ_s = CONFIG\_MSG\_SEQ_r$)
- Preferred Access Channel MSID type ($PREF\_MSID\_TYPE_s = PREF\_MSID\_TYPE_r$)
- Extended Preferred Access Channel MSID type ($EXT\_PREF\_MSID\_TYPE_s = EXT\_PREF\_MSID\_TYPE_r$) if included; otherwise, set $EXT\_PREF\_MSID\_TYPE_s$ to NULL.
- MEID Required indicator ($MEID\_REQD_s = MEID\_REQD_r$) if included; otherwise, set $MEID\_REQD_s$ to '0'
- Broadcast slot cycle index ($BCAST\_INDEX_s = BCAST\_INDEX_r$)
- The mobile station shall set its operational IMSI, IMSI_O, as follows:
  - If $IMSI\_T\_SUPPORTED_r$ is equal to '0', the mobile station shall set IMSI_O to $IMSI\_M_p$.
  - If $IMSI\_T\_SUPPORTED_r$ is equal to '1' and the mobile station's $IMSI\_T_p$ has been programmed, the mobile station shall set IMSI_O to $IMSI\_T_p$.
  - If $IMSI\_T\_SUPPORTED_r$ is equal to '1' and the mobile station's $IMSI\_T_p$ has not been programmed, the mobile station shall set IMSI_O to $IMSI\_M_p$.
- If MCC_r = '1111111111' and $IMSI\_11\_12_r$ = '1111111', the mobile station shall set the IMSI_O to $IMSI\_M_p$ and store:
  - Mobile Country Code ($MCC_s = MCC\_M_p$) and
  - IMSI 11th and 12th digits ($IMSI\_11\_12_s = IMSI\_M\_11\_12_p$);

  otherwise, the mobile station shall store:
  - Mobile Country Code ($MCC_s = MCC_r$) and
  - IMSI 11th and 12th digits ($IMSI\_11\_12_s = IMSI\_11\_12_r$).
- Least significant digit of MNC ($IMSI\_10_s = IMSI\_10_r$), if included.
- If IMSI_O is set to the IMSI_M, the mobile station shall set:
  - $IMSI\_O\_S_s$ to $IMSI\_M\_S_p$ (i.e., $IMSI\_O\_S1_s$ to $IMSI\_M\_S1_p$ and $IMSI\_O\_S2_s$ to $IMSI\_M\_S2_p$)
  - $IMSI\_O\_11\_12_s$ to $IMSI\_M\_11\_12_p$
  - MCC_O_s to MCC_M_p
  - $IMSI\_O\_ADDR\_NUM_s$ to $IMSI\_M\_ADDR\_NUM_p$
- If IMSI_O is set to the IMSI_T, the mobile station shall set:
  - $IMSI\_O\_S_s$ to $IMSI\_T\_S_p$ (i.e., $IMSI\_O\_S1_s$ to $IMSI\_T\_S1_p$ and $IMSI\_O\_S2_s$ to $IMSI\_T\_S2_p$).

- IMSI_O_11_12$_s$ to IMSI_T_11_12$_p$
- MCC_O$_s$ to MCC_T$_p$
- IMSI_O_ADDR_NUM$_s$ to IMSI_T_ADDR_NUM$_p$

- If IMSI_O has been changed, the mobile station shall set SYS_PAR_MSG_SEQ$_s$, CHAN_LST_MSG_SEQ$_s$, EXT_CHAN_LST_MSG_SEQ$_s$, FD_CHAN_LST_MSG_SEQ$_s$ to NULL, and set PAGE_CHAN$_s$ to '1', and set PAGECH$_s$ to the Primary Paging Channel.
- Protocol revision level (P_REV$_s$ = P_REV$_r$) if included in the message; otherwise, set P_REV$_s$ as follows:
  - For Band Class 0, if the mobile station determines it is operating in Korea, set P_REV$_s$ to '00000010'; otherwise, set P_REV$_s$ to '00000011'.
  - For Band Class 3, set P_REV$_s$ to '00000011'.
  - For Band Class 1 and Band Class 4, set P_REV$_s$ to '00000001'.
- Minimum protocol revision level (MIN_P_REV$_s$ = MIN_P_REV$_r$) if included in the message; otherwise, MIN_P_REV$_s$ = '00000010' for Band Class 0, MIN_P_REV$_s$ = '00000001' for Band Class 1 and Band Class 4, and MIN_P_REV$_s$ = '00000011' for Band Class 3.
- Protocol revision level currently in use (P_REV_IN_USE$_s$ = the lesser value of P_REV$_s$ and MOB_P_REV$_p$ of the current band class)
- Slope of the handoff add/drop criterion (SOFT_SLOPE$_s$ = SOFT_SLOPE$_r$) if included in the message; otherwise, SOFT_SLOPE$_s$ = '000000'.
- Intercept of the handoff add criterion (ADD_INTERCEPT$_s$ = ADD_INTERCEPT$_r$)
- Intercept of the handoff drop criterion (DROP_INTERCEPT$_s$ = DROP_INTERCEPT$_r$)
- Delete foreign TMSI (DELETE_FOR_TMSI$_s$ = DELETE_FOR_TMSI$_r$)
- Use TMSI (USE_TMSI$_s$ = USE_TMSI$_r$)
- TMSI zone length (TMSI_ZONE_LEN$_s$ = TMSI_ZONE_LEN$_r$)
- TMSI zone number (TMSI_ZONE$_s$ = TMSI_ZONE$_r$)
- Maximum number of alternative service options (MAX_NUM_ALT_SO$_s$ = MAX_NUM_ALT_SO$_r$).
- System reselection indicator (RESELECT_INCLUDED$_s$ = RESELECT_INCLUDED$_r$) if included in the message; otherwise, RESELECT_INCLUDED$_s$ = '0'.
- Pilot reporting indicator (PILOT_REPORT$_s$ = PILOT_REPORT$_r$)
- Neighbor Set access entry handoff information indicator (NGHBR_SET_ENTRY_INFO$_s$ = NGHBR_SET_ENTRY_INFO$_r$) if included in the message; otherwise, NGHBR_SET_ENTRY_INFO$_s$ = '0'.

- Neighbor Set access handoff information indicator ($NGHBR\_SET\_ACCESS\_INFO_s$ = $NGHBR\_SET\_ACCESS\_INFO_r$) if included in the message; otherwise, $NGHBR\_SET\_ACCESS\_INFO_s$ = '0'.
- Short Data Burst supported indicator ($SDB\_SUPPORTED_s$ = $SDB\_SUPPORTED_r$)
- Nominal reverse traffic channel output power offset relative to Reverse Pilot Channel power ($RLGAIN\_TRAFFIC\_PILOT_s$ = $RLGAIN\_TRAFFIC\_PILOT_r$)
- Broadcast GPS Assist Indicator ($BROADCAST\_GPS\_ASST_s$ = $BROADCAST\_GPS\_ASST_r$)
- Reverse Power Control Delay ($REV\_PWR\_CNTL\_DELAY_s$ = $REV\_PWR\_CNTL\_DELAY_r$) if included
- Permission for the mobile station to request QoS settings in the *Origination Message*, *Origination Continuation Message*, or *Enhanced Origination Message* (MOB_QOS_s = MOB_QOS_r)
- If $ENC\_SUPPORTED_r$ is equal to '1', the mobile station shall store:
  - Signaling encryption supported indicator ($SIG\_ENCRYPT\_SUP_s$ = $SIG\_ENCRYPT\_SUP_r$)
  - User information encryption supported indicator ($UI\_ENCRYPT\_SUP_s$ = $UI\_ENCRYPT\_SUP_r$)
- Sync ID supported indicator ($USE\_SYNC\_ID_s$ = $USE\_SYNC\_ID_r$)
- Concurrent services supported indicator ($CS\_SUPPORTED_s$ = $CS\_SUPPORTED_r$)
- Maximum number of additional service reference identifiers allowed in origination ($MAX\_ADD\_SERV\_INSTANCE_s$ = $MAX\_ADD\_SERV\_INSTANCE_r$), if included; otherwise, the mobile station shall set $MAX\_ADD\_SERV\_INSTANCE_s$ to 0.
- Primary Broadcast Control Channel supported indicator ($BCCH\_SUPPORTED_s$ = $BCCH\_SUPPORTED_r$).
- Pilot information request supported indicator ($PILOT\_INFO\_REQ\_SUPPORTED_s$ = $PILOT\_INFO\_REQ\_SUPPORTED_r$).
- Message integrity supported indicator ($MSG\_INTEGRITY\_SUP_s$ = $MSG\_INTEGRITY\_SUP_r$), if $P\_REV\_IN\_USE_s$ is greater than or equal to 10; otherwise, $MSG\_INTEGRITY\_SUP_s$ = 0.
- If $MSG\_INTEGRITY\_SUP_r$ is equal to '1' and $SIG\_INTEGRITY\_SUP\_INCL_r$ is equal to '1', the mobile station shall store the message integrity algorithms that the base station supports ($SIG\_INTEGRITY\_SUP_s$ = $SIG\_INTEGRITY\_SUP_r$); otherwise, the mobile station shall set $SIG\_INTEGRITY\_SUP_s$ to '00000000'.
- Band class information request indicator ($BAND\_CLASS\_INFO\_REQ_s$ = $BAND\_CLASS\_INFO\_REQ_r$)
- Alternate CDMA band class ($ALT\_BAND\_CLASS_s$ = $ALT\_BAND\_CLASS_r$), if $BAND\_CLASS\_INFO\_REQ_r$ is equal to '1'.

- CDMA off time report supported indicator ($CDMA\_OFF\_TIME\_REP\_SUP\_IND_s$ = $CDMA\_OFF\_TIME\_REP\_SUP\_IND_r$)
- If $CDMA\_OFF\_TIME\_REP\_SUP\_IND_r$ is equal to '1', the mobile station shall store:
  - CDMA off time report threshold ($CDMA\_OFF\_TIME\_REP\_THRESHOLD_s$ = $CDMA\_OFF\_TIME\_REP\_THRESHOLD_r$ in units specified by $CDMA\_OFF\_TIME\_REP\_UNIT_r$)
- Control Hold Mode supported indicator ($CHM\_SUPPORTED_s$ = $CHM\_SUPPORTED_r$) if included; otherwise, the mobile station shall perform the following:
  - If $P\_REV\_IN\_USE_s$ is less than six, set $CHM\_SUPPORTED_s$ to '0'.
  - Otherwise, set $CHM\_SUPPORTED_s$ to '1'.
- Release to Idle State allowed indicator ($RELEASE\_TO\_IDLE\_IND_s$ = $RELEASE\_TO\_IDLE\_IND_r$).
- *Reconnect Message* supported indicator ($RECONNECT\_MSG\_IND_s$ = $RECONNECT\_MSG\_IND_r$).
- Short Data Burst allowed in *Reconnect Message* allowed indicator ($SDB\_IN\_RCNM\_IND_s$ = $SDB\_IN\_RCNM\_IND_r$), if included; otherwise, set SDB_IN_RCNM_INDs to '0'.
- Forward Packet Data Channel supported Indicator ($FOR\_PDCH\_SUPPORTED_s$ = $FOR\_PDCH\_SUPPORTED_r$).
- PDCH Control Hold Mode supported indicator ($PDCH\_CHM\_SUPPORTED_s$ = $PDCH\_CHM\_SUPPORTED_r$) if included; otherwise, set $PDCH\_CHM\_SUPPORTED_s$ to '0'.
- If $RER\_MODE\_SUPPORTED_r$ is not included, the mobile station shall set $RER\_MODE\_SUPPORTED_s$ to '0'; otherwise, the mobile station shall set $RER\_MODE\_SUPPORTED_s$ to $RER\_MODE\_SUPPORTED_r$.
- If $TKZ\_MODE\_SUPPORTED_r$ is not included, the mobile station shall set $TKZ\_MODE\_SUPPORTED_s$ to '0'; otherwise, the mobile station shall set $TKZ\_MODE\_SUPPORTED_s$ to $TKZ\_MODE\_SUPPORTED_r$. If $TKZ\_MODE\_SUPPORTED_s$ is equal to '1', the mobile station shall store the tracking zone identifier (TKZ_ID_s = TKZ_ID_r).
- If $AUTO\_FCSO\_ALLOWED_r$ is not included, the mobile station shall set $AUTO\_FCSO\_ALLOWED_s$ to '0'; otherwise, the mobile station shall set $AUTO\_FCSO\_ALLOWED_s$ to $AUTO\_FCSO\_ALLOWED_r$.
- If $CAND\_BAND\_INFO\_REQ_r$ is included, the mobile station shall set $CAND\_BAND\_INFO\_REQ_s$ to $CAND\_BAND\_INFO\_REQ_r$; otherwise, the mobile station shall set $CAND\_BAND\_INFO\_REQ_s$ to '0'.

- If $BYPASS\_REG\_IND_r$ is included, the mobile station shall set $BYPASS\_REG\_IND_s$ to $BYPASS\_REG\_IND_r$; otherwise, the mobile station shall set $BYPASS\_REG\_IND_s$ to '00'.

If $BCCH\_SUPPORTED_s$ equals '1', the mobile station shall enter the *System Determination Substate* of the *Mobile Station Initialization State* with a new system indication.

If $P\_REV\_IN\_USE_s$ has been changed, the mobile station shall set $ACC\_MSG\_SEQ_s$, CURR_ACC_MSG_SEQ, $SYS\_PAR\_MSG\_SEQ_s$, $EXT\_NGHBR\_LST\_MSG\_SEQ_s$, $GEN\_NGHBR\_LST\_MSG\_SEQ_s$, and $GLOB\_SERV\_REDIR\_MSG\_SEQ_s$ to NULL.

If NGHBR_SET_ENTRY_INFO is equal to '1', the mobile station shall store the access entry handoff in order and message processing operation indicator ($ACC\_ENT\_HO\_ORDER_s$ = $ACC\_ENT\_HO\_ORDER_r$).

If the mobile station supports packet data service options, the mobile station shall store the packet data services zone identifier ($PACKET\_ZONE\_ID_s$ = $PACKET\_ZONE\_ID_r$); otherwise, the mobile station shall set $PACKET\_ZONE\_ID_s$ to '00000000'.

If the mobile station supports packet data service options and the PZ_HYST_ENABLED field is included, the mobile station shall store the packet zone hysteresis enabled indicator ($PZ\_HYST\_ENABLED_s$ = $PZ\_HYST\_ENABLED_r$); otherwise, the mobile station shall set $PZ\_HYST\_ENABLED_s$ to '1'.

If the mobile station supports packet data service options and the PZ_HYST_LIST_LEN field is included, the mobile station shall store the packet zone hysteresis list length ($PZ\_HYST\_LIST\_LEN_s$ = $PZ\_HYST\_LIST\_LEN_r$); otherwise, the mobile station shall set $PZ\_HYST\_LIST\_LEN_s$ to 4.

If the mobile station supports packet data service options and the PZ_HYST_ACT_TIMER field is included, the mobile station shall store the packet zone hysteresis activation timer ($PZ\_HYST\_ACT\_TIMER_s$ = $PZ\_HYST\_ACT\_TIMER_r$); otherwise, the mobile station shall set $PZ\_HYST\_ACT\_TIMER_s$ to 30 seconds.

If the mobile station supports packet data service options and the PZ_HYST_TIMER_MUL field and the PZ_HYST_TIMER_EXP field are included, the mobile station shall store the packet zone hysteresis timer ($PZ\_HYST\_TIMER_s$ = $PZ\_HYST\_TIMER\_MUL_r \times 8 \wedge PZ\_HYST\_TIMER\_EXP_r$); otherwise, the mobile station shall set $PZ\_HYST\_TIMER_s$ to 60 seconds.

If $RESELECT\_INCLUDED_s$ is equal to '1', the mobile station shall store:

- Pilot power threshold (EC_THRESH_s = EC_THRESH_r)
- Pilot E_c/I_0 threshold ($EC\_I0\_THRESH_s$ = $EC\_I0\_THRESH_r$)

If $NGHBR\_SET\_ACCESS\_INFO_s$ is equal to '1', the mobile station shall store:

- Access handoff permitted indicator ($ACCESS\_HO_s$ = $ACCESS\_HO_r$)
- Access probe handoff permitted indicator ($ACCESS\_PROBE\_HO_s$ = $ACCESS\_PROBE\_HO_r$)
- If $ACCESS\_PROBE\_HO_s$ is equal to '1', access handoff list update permitted indicator ($ACC\_HO\_LIST\_UPD_s$ = $ACC\_HO\_LIST\_UPD_r$)

- Maximum number of times that the mobile station is permitted to perform an access probe handoff ($MAX\_NUM\_PROBE\_HO_s = MAX\_NUM\_PROBE\_HO_r$)
- Access handoff permitted for message response indicator ($ACCESS\_HO\_MSG\_RSP_s = ACCESS\_HO\_MSG\_RSP_r$)
- Access probe handoff permitted for other messages indicator ($ACC\_PROBE\_HO\_OTHER\_MSG_s = ACC\_PROBE\_HO\_OTHER\_MSG_r$)

If $NGHBR\_SET\_ENTRY\_INFO_s$ or $NGHBR\_SET\_ACCESS\_INFO_s$ is equal to '1', the mobile station shall store the size of the Neighbor Set ($NGHBR\_SET\_SIZE_s = NGHBR\_SET\_SIZE_r$).

If $NGHBR\_SET\_ENTRY\_INFO_s$ is equal to '0', then for all $NGHBR\_SET\_SIZE_s$ occurrences of ACCESS_ENTRY_HO, the mobile station shall set the ACCESS_ENTRY_HO field of NGHBR_REC[i] to '0'.

If $NGHBR\_SET\_ENTRY\_INFO_s$ is equal to '1', then for all $NGHBR\_SET\_SIZE_s$ occurrences of ACCESS_ENTRY_HO, the mobile station shall set the ACCESS_ENTRY_HO field of NGHBR_REC[i] to the ith occurrence of $ACCESS\_ENTRY\_HO_r$.

If $NGHBR\_SET\_ACCESS\_INFO_s$ is equal to '0', then for all $NGHBR\_SET\_SIZE_s$ occurrences of ACCESS_HO_ALLOWED, the mobile station shall set the ACCESS_HO_ALLOWED field of NGHBR_REC[i] to '0'.

If $NGHBR\_SET\_ACCESS\_INFO_s$ is equal to '1', then for all $NGHBR\_SET\_SIZE_s$ occurrences of ACCESS_HO_ALLOWED, the mobile station shall set the ACCESS_HO_ALLOWED field of NGHBR_REC[i] to the ith occurrence of $ACCESS\_HO\_ALLOWED_r$.

The mobile station shall set all bits of $TMSI\_CODE_{s-p}$ to '1' if all of the following conditions are met:

- The bits of $TMSI\_CODE_{s-p}$ are not all equal to '1',
- $DELETE\_FOR\_TMSI_s$ is equal to '1', and
- $ASSIGNING\_TMSI\_ZONE\_LEN_{s-p}$ is not equal to $TMSI\_ZONE\_LEN_s$, or the least significant $ASSIGNING\_TMSI\_ZONE\_LEN_{s-p}$ octets of $ASSIGNING\_TMSI\_ZONE_{s-p}$ are not equal to $TMSI\_ZONE_s$.

If the mobile station supports the Quick Paging Channel operation:

- The mobile station shall set $QPCH\_SUPPORTED_s$ to $QPCH\_SUPPORTED_r$.
- If $QPCH\_SUPPORTED_r$ = '1':
  - The mobile station shall set $QPCH\_RATE_s$ to $QPCH\_RATE_r$.
  - If the number of Quick Paging Channels specified in the received message (NUM_QPCH_r) is different from NUM_QPCH_s, the mobile station shall use the hash algorithm specified in 2.6.7.1 to select a new Quick Paging Channel number in the range 1 to NUM_QPCH_r. The mobile station shall store the new Quick Paging Channel number as $QPAGECH_s$ and as $ASSIGNED\_QPAGECH_s$. The mobile station shall then set NUM_QPCH_s to NUM_QPCH_r.

  - The mobile station shall set $QPCH\_POWER\_LEVEL\_PAGE_s$ to $QPCH\_POWER\_LEVEL\_PAGE_r$.
  - The mobile station shall set $QPCH\_CCI\_SUPPORTED_s$ to $QPCH\_CCI\_SUPPORTED_r$.
  - If $QPCH\_CCI\_SUPPORTED_r$ = '1', the mobile station shall set $QPCH\_POWER\_LEVEL\_CONFIG_s$ to $QPCH\_POWER\_LEVEL\_CONFIG_r$.
- The mobile station shall set $QPCH\_BI\_SUPPORTED_s$ to $QPCH\_BI\_SUPPORTED_r$, if included.
- If $QPCH\_BI\_SUPPORTED_r$ = '1', the mobile station shall set $QPCH\_POWER\_LEVEL\_BCAST_s$ to $QPCH\_POWER\_LEVEL\_BCAST_r$.

If the mobile station supports the *Device Information Message* on the r-csch, the mobile station shall store:

- Autonomous message supported indicator ($AUTO\_MSG\_SUPPORTED_s$= $AUTO\_MSG\_SUPPORTED_r$)

If $AUTO\_MSG\_SUPPORTED_r$ is equal to '1' and the mobile station supports the *Device Information Message* on the r-csch, the mobile station shall store:

- Autonomous message interval ($AUTO\_MSG\_INTERVAL_s$ = $AUTO\_MSG\_INTERVAL_r$)

The mobile station shall store mobile station initiated position location determination supported indicator ($MS\_INIT\_POS\_LOC\_SUP\_IND_s$ = $MS\_INIT\_POS\_LOC\_SUP\_IND_r$).

The mobile station shall set $FOR\_PDCH\_COMMON\_PARMS_s$ = '0'.

If both $FOR\_PDCH\_SUPPORTED_r$ and $PDCH\_PARMS\_INCL_r$ are included and equal to '1', the mobile station shall perform the following:

- If $FOR\_PDCH\_RLGAIN\_INCL_r$ is included and equal to '1', the mobile station shall set:
  - ($RLGAIN\_ACKCH\_PILOT_s$ = $RLGAIN\_ACKCH\_PILOT_r$).
  - ($RLGAIN\_CQICH\_PILOT_s$ = $RLGAIN\_CQICH\_PILOT_r$).
- The mobile station shall set $NUM\_SOFT\_SWITCHING\_FRAMES_s$ = $NUM\_SOFT\_SWITCHING\_FRAMES_r$ + 1, and $NUM\_SOFTER\_SWITCHING\_FRAMES_s$ = $NUM\_SOFTER\_SWITCHING\_FRAMES_r$ + 1.
- The mobile station shall set $NUM\_SOFT\_SWITCHING\_FRAMES\_CHM_s$ = $NUM\_SOFT\_SWITCHING\_FRAMES_r$ + 1, and $NUM\_SOFTER\_SWITCHING\_FRAMES\_CHM_s$ = $NUM\_SOFTER\_SWITCHING\_FRAMES_r$ + 1.
- The mobile station shall set $NUM\_SOFT\_SWITCHING\_SLOTS_s$ according to Table 3.7.2.3.2.21-9 based on the value of $NUM\_SOFT\_SWITCHING\_SLOTS_r$.
- The mobile station shall set $NUM\_SOFTER\_SWITCHING\_SLOTS_s$ according to Table 3.7.2.3.2.21-9 based on the value of $NUM\_SOFTER\_SWITCHING\_SLOTS_r$.

- The mobile station shall set $PDCH\_SOFT\_SWITCHING\_DELAY_s$ to $PDCH\_SOFT\_SWITCHING\_DELAY_r + 1$, and $PDCH\_SOFTER\_SWITCHING\_DELAY_s$ to $PDCH\_SOFTER\_SWITCHING\_DELAY_r + 1$.
- The mobile station shall set $FOR\_PDCH\_COMMON\_PARMS_s$ = '1'.
- The mobile station shall set $WALSH\_TABLE\_ID_s = WALSH\_TABLE\_ID_r$.
- The mobile station shall set $NUM\_PDCCH_s = NUM\_PDCCH_r$.
- The mobile station shall store $FOR\_PDCCH\_WALSH_s[i]$ to the ith occurrence of $FOR\_PDCCH\_WALSH_r$.

If $FOR\_PDCH\_SUPPORTED_r$ is included and equal to '1', then the mobile station shall set Reverse Packet Data Channel supported indicator ($REV\_PDCH\_SUPPORTED_s = REV\_PDCH\_SUPPORTED_r$).

If $REV\_PDCH\_PARMS\_INCL_r$ is not included, or if it is included and equal to '0', the mobile station shall set $REV\_PDCH\_PARMS\_INCL_s$ to '0'; otherwise, the mobile station shall set $REV\_PDCH\_PARMS\_INCL_s$ to '1' and perform the following:

- If $REV\_PDCH\_RLGAIN\_INCL_r$ is equal to '1', the mobile station shall set:
  - ($RLGAIN\_SPICH\_PILOT_s = RLGAIN\_SPICH\_PILOT_r$).
  - ($RLGAIN\_REQCH\_PILOT_s = RLGAIN\_REQCH\_PILOT_r$).
  - ($RLGAIN\_PDCCH\_PILOT_s = RLGAIN\_PDCCH\_PILOT_r$).
- If $REV\_PDCH\_PARMS\_1\_INCL_r$ is equal to '1', the mobile station shall set:
  - ($REV\_PDCH\_TABLE\_SEL_s = REV\_PDCH\_TABLE\_SEL_r$).
  - ($REV\_PDCH\_MAX\_AUTO\_TPR_s$ to $REV\_PDCH\_MAX\_AUTO\_TPR_r$).
  - ($REV\_PDCH\_NUM\_ARQ\_ROUNDS\_NORMAL_s = REV\_PDCH\_NUM\_ARQ\_ROUNDS\_NORMAL_r+1$).
- If $REV\_PDCH\_OPER\_PARMS\_INCL_r$ is equal to '1', the mobile station shall set:
  - ($REV\_PDCH\_MAX\_SIZE\_ALLOWED\_ENCODER\_PACKET_s = REV\_PDCH\_MAX\_SIZE\_ALLOWED\_ENCODER\_PACKET_r+1$).
  - ($REV\_PDCH\_DEFAULT\_PERSISTENCE_s = REV\_PDCH\_DEFAULT\_PERSISTENCE_r$).
  - ($REV\_PDCH\_RESET\_PERSISTENCE_s = REV\_PDCH\_RESET\_PERSISTENCE_r$).
  - ($REV\_PDCH\_GRANT\_PRECEDENCE_s = REV\_PDCH\_GRANT\_PRECEDENCE_r$).
  - ($REV\_PDCH\_MSIB\_SUPPORTED_s = REV\_PDCH\_MSIB\_SUPPORTED_r$).
  - ($REV\_PDCH\_SOFT\_SWITCHING\_RESET\_IND_s = REV\_PDCH\_SOFT\_SWITCHING\_RESET\_IND_r$).

The mobile station shall store the following parameters:

- *BCMC Service Parameters Message* sent ($SENDING\_BSPM_s = SENDING\_BSPM_r$), if included; otherwise, set $SENDING\_BSPM_s$ to '0'.

- *BCMC Service Parameters Message* transmission periodicity index ($BSPM\_PERIOD\_INDEX_s = BSPM\_PERIOD\_INDEX_r$) if $SENDING\_BSPM_r$ equals '1'; otherwise, $BSPM\_PERIOD\_INDEX_s$ = NULL.

- If $BSPM\_PERIOD\_INDEX_s$ is not equal to NULL, the mobile station shall set BSPM_WAIT_TIME to $(B + 1) \times 160$ms, where

$$B = 2^i \times 16,\ 0 \le i \le 15$$

and $i = BSPM\_PERIOD\_INDEX_s$.

If $CAND\_BAND\_INFO\_REQ_r$ is set to '1', the mobile station shall store the number of candidate band classes minus one ($NUM\_CAND\_BAND\_CLASS_s = NUM\_CAND\_BAND\_CLASS_r$).

If $CAND\_BAND\_INFO\_REQ_r$ is set to '1', the mobile station shall perform the following for each occurrence of the CAND_BAND_CLASS record:

- Set the CAND_BAND_CLASS field of CAND_BAND_CLASS_REC[i] to the ith occurrence of $CAND\_BAND\_CLASS_r$.
- Set the SUBCLASS_INFO_INCL field of CAND_BAND_CLASS_REC[i] to the ith occurrence of $SUBCLASS\_INFO\_INCL_r$.
- If the ith occurrence of $SUBCLASS\_INFO\_INCL_r$ is set to '1', set the SUBCLASS_REC_LEN field of CAND_BAND_CLASS_REC[i] to the ith occurrence of $SUBCLASS\_REC\_LEN_r$.
- If the ith occurrence of $SUBCLASS\_INFO\_INCL_r$ is set to '1', the mobile station shall perform the following for each band subclass indicator received:
  - Set the BAND_SUBCLASS_IND_REC[j] field of CAND_BAND_CLASS_REC[i] to the jth occurrence of $BAND\_SUBCLASS\_IND_r$.

If $TX\_PWR\_LIMIT\_INCL_r$ is set to '1' and the mobile station is operating in the 1915MHz – 1920MHz block of the PCS band, the mobile station shall store the transmit power limit $TX\_PWR\_LIMIT_s = (TX\_PWR\_LIMIT_r - 30dBm)$; otherwise, the mobile station shall set $TX\_PWR\_LIMIT_s$ to the limit defined in [11].

2.6.2.2.6 Global Service Redirection Message

Whenever a *Global Service Redirection Message* is received on the Paging Channel, the configuration message sequence number, $CONFIG\_MSG\_SEQ_r$, shall be compared to that stored in $GLOB\_SERV\_REDIR\_MSG\_SEQ_s$. If the comparison results in a match or if

SYS_PAR_MSG_SEQ$_s$ is not current, the mobile station may ignore the message; otherwise, the mobile station shall store the following parameters:

- Configuration message sequence number (CONFIG_MSG_SEQ$_s$ = CONFIG_MSG_SEQ$_r$, GLOB_SERV_REDIR_MSG_SEQ$_s$= CONFIG_MSG_SEQ$_r$)
- The mobile station shall ignore this message, if any of the following conditions is true:
  - EXT_GLOBAL_REDIRECT$_s$ = '1'
  - EXCL_P_REV_MS$_r$ = '1'
  - Type of redirection as specified by RECORD_TYPE$_r$ is not supported
  - BAND_CLASS$_r$ is not supported (RECORD_TYPE$_r$ = '00000010')
  - None of the included CDMA_CHAN$_r$ are supported (RECORD_TYPE$_r$ = '00000010')

If the subfield corresponding to the access overload class, ACCOLC$_p$, of the mobile station is set equal to '1' in the REDIRECT_ACCOLC$_r$ field of the received message, the mobile station shall store the following parameters and then shall enter the *System Determination Substate* of the *Mobile Station Initialization State* with a redirection indication (see 2.6.1.1):

- Return if fail indicator (RETURN_IF_FAIL$_s$ = RETURN_IF_FAIL$_r$)
- If DELETE_TMSI$_r$ is equal to '1', the mobile station shall set all the bits of TMSI_CODE$_{s-p}$ to '1'
- Redirection record (REDIRECT_REC$_s$ = redirection record from received message)
- If RECORD_TYPE$_r$ = '00000001', the mobile station shall:
  - Set CDMA_MODE$_s$ to '1'
  - Set DIGITAL_REG$_{s-p}$ to '00000000'
  - Set the maximum delay upon redirection (MAX_REDIRECT_DELAY$_s$ = MAX_REDIRECT_DELAY$_r$)

2.6.2.2.7 Extended Neighbor List Message

Whenever a valid *Extended Neighbor List Message* is received on the current Paging Channel (PAGECH$_s$), the configuration message sequence number, CONFIG_MSG_SEQ$_r$, shall be compared to that stored in EXT_NGHBR_LST_MSG_SEQ$_s$. If the comparison results in a match, the mobile station may ignore the message. If the comparison results in a mismatch, then the mobile station shall process the remaining fields in the message as follows.

If the PILOT_INC field is not within the valid range specified in 3.7.2.3.2.14, then the mobile station shall ignore the *Extended Neighbor List Message* that contains it.

The mobile station shall store the following parameters:

- Configuration message sequence number ($CONFIG\_MSG\_SEQ_s = CONFIG\_MSG\_SEQ_r$, $EXT\_NGHBR\_LST\_MSG\_SEQ_s = CONFIG\_MSG\_SEQ_r$, $NGHBR\_LST\_MSG\_SEQ_s = CONFIG\_MSG\_SEQ_r$)
- Pilot PN sequence offset increment ($PILOT\_INC_s = PILOT\_INC_r$)

The mobile station shall set $NGHBR\_SET\_SIZE_s$ to the number of neighboring base stations contained in the *Extended Neighbor List Message*.

For each of the neighboring base stations contained in the *Extended Neighbor List Message*, if $FREQ\_INCL_r$ equals '0', or if $FREQ\_INCL_r$ equals '1' and $NGHBR\_BAND_r$ is supported, the mobile station shall perform the following:

- If the ith occurrence of $NGHBR\_CONFIG_r$ is equal to '000', '001', or '010', set the NGHBR_CONFIG field of NGHBR_REC[i] to the ith occurrence of $NGHBR\_CONFIG_r$; otherwise, set the NGHBR_CONFIG field of NGHBR_REC [i] to '011'.
- Set the NGHBR_PN field of NGHBR_REC[i] to the ith occurrence of $NGHBR\_PN_r$.
- Set the SEARCH_PRIORITY field of NGHBR_REC[i] to the ith occurrence of $SEARCH\_PRIORITY_r$.

For each of the neighboring base stations contained in the *Extended Neighbor List Message*, if $FREQ\_INCL_r$ equals '1' and $NGHBR\_BAND_r$ is supported, the mobile station shall also perform the following:

- Set the NGHBR_BAND field of NGHBR_REC[i] to the ith occurrence of $NGHBR\_BAND_r$.
- Set the NGHBR_FREQ field of NGHBR_REC[i] to the ith occurrence of $NGHBR\_FREQ_r$.

For each of the neighboring base stations contained in the *Extended Neighbor List Message*, if $FREQ\_INCL_r$ equals '0', the mobile station shall also perform the following:

- Set the NGHBR_BAND field of NGHBR_REC[i] to $CDMABAND_s$.
- If $NGHBR\_CONFIG_r$ equals '010', set the NGHBR_FREQ field of NGHBR_REC[i] to the first CDMA Channel listed in the *CDMA Channel List Message or Extended CDMA Channel List Message* transmitted by the current base station; otherwise, set the NGHBR_FREQ field of NGHBR_REC[i] to $CDMACH_s$.

If $GEN\_NGHBR\_LST\_MSG\_SEQ_s$ is not equal to $CONFIG\_MSG\_SEQ_s$, the mobile station shall perform the following:

- Set the SRCH_WIN_NGHBR field of NGHBR_REC to $SRCH\_WIN\_N_s$ for all $NGHBR\_SET\_SIZE_s$ entries.
- Set the SRCH_OFFSET_NGHBR field of NGHBR_REC to '000' for all entries.

The mobile station shall set the ACCESS_ENTRY_HO field of the NGHBR_REC to '0' for all $NGHBR\_SET\_SIZE_s$ entries if any of the following conditions are met:

- $EXT\_SYS\_PARAMETER_S$ is equal to '0',
- $NGHBR\_SET\_ENTRY\_INFO_S$ is equal to '0', or
- $EXT\_SYS\_PAR\_MSG\_SEQ_S$ is not equal to $CONFIG\_MSG\_SEQ_S$.

The mobile station shall set the ACCESS_HO_ALLOWED field of the NGHBR_REC to '0' for all $NGHBR\_SET\_SIZE_S$ entries if any of the following conditions are met:

- $EXT\_SYS\_PARAMETER_S$ is equal to '0',
- $NGHBR\_SET\_ACCESS\_INFO_S$ is equal to '0', or
- $EXT\_SYS\_PAR\_MSG\_SEQ_S$ is not equal to $CONFIG\_MSG\_SEQ_S$.

The mobile station shall update the idle handoff Neighbor Set (see 2.6.2.1.4) so that it consists only of pilot offsets listed in the *Extended Neighbor List Message*. If the *Extended Neighbor List Message* contains more pilot offsets than the mobile station can store, the mobile station shall store the pilot offsets beginning at the start of the *Extended Neighbor List Message*, up to the limits of the mobile station's Neighbor Set storage capacity.

2.6.2.2.8 General Neighbor List Message

Whenever a valid *General Neighbor List Message* is received on the current Paging Channel ($PAGECH_S$), the configuration message sequence number, $CONFIG\_MSG\_SEQ_r$ shall be compared to that stored in $GEN\_NGHBR\_LST\_MSG\_SEQ_S$. If the comparison results in a match, the mobile station may ignore the message. If the comparison results in a mismatch, then the mobile station shall process the remaining fields in the message as follows.

If the PILOT_INC field is not within the valid range specified in 3.7.2.3.2.22, then the mobile station shall ignore the *General Neighbor List Message* that contains it.

The mobile station shall store the following parameters:

- Configuration message sequence number
  ($CONFIG\_MSG\_SEQ_S = CONFIG\_MSG\_SEQ_r$,
  $GEN\_NGHBR\_LST\_MSG\_SEQ_S = CONFIG\_MSG\_SEQ_r$).
- Pilot PN sequence offset increment ($PILOT\_INC_S = PILOT\_INC_r$).

If $NGHBR\_CONFIG\_PN\_INCL_r$ is equal to '1' and $FREQ\_FIELDS\_INCL_r$ is equal to '1', the mobile station shall store the following parameters:

- Configuration message sequence number
  ($EXT\_NGHBR\_LST\_MSG\_SEQ_S = CONFIG\_MSG\_SEQ_r$,
  $NGHBR\_LST\_MSG\_SEQ_S = CONFIG\_MSG\_SEQ_r$).

The mobile station shall set $NGHBR\_SET\_SIZE_S$ to the number of neighboring base stations contained in the *General Neighbor List Message*.

For each of the neighboring base stations contained in the *General Neighbor List Message*, if $FREQ\_INCL_r$ equal '0', or if $FREQ\_INCL_r$ equal '1' and $NGHBR\_BAND_r$ is supported, the mobile station shall perform the following:

- If $NGHBR\_CONFIG\_PN\_INCL_r$ is equal to '1', set the NGHBR_CONFIG and NGHBR_PN fields as follows:
  - If the ith occurrence of $NGHBR\_CONFIG_r$ is equal to '000', '001', or '010', set the NGHBR_CONFIG field of NGHBR_REC[i] to the ith occurrence of $NGHBR\_CONFIG_r$; otherwise, set the NGHBR_CONFIG field of NGHBR_REC[i] to '011'.
  - Set the NGHBR_PN field of NGHBR_REC[i] to the ith occurrence of $NGHBR\_PN_r$.
- If $NGHBR\_SRCH\_MODE_r$ = '00' or '10' and $EXT\_NGHBR\_LST\_MSG\_SEQ_s$ is not equal to $CONFIG\_MSG\_SEQ_r$, set SEARCH_PRIORITY field of each NGHBR_REC to '10' (high) for all $NGHBR\_SET\_SIZE_s$ entries.
- If $NGHBR\_SRCH\_MODE_r$ = '01' or '11', set the SEARCH_PRIORITY field of NGHBR_REC[i] to the ith occurrence of $SEARCH\_PRIORITY_r$.
- If $NGHBR\_SRCH\_MODE_r$ = '00' or '01', set the SRCH_WIN_NGHBR field of each NGHBR_REC to $SEARCH\_WIN_s$ for all $NGHBR\_SET\_SIZE_s$ entries if $SYS\_PAR\_MSG\_SEQ_s$ is equal to $CONFIG\_MSG\_SEQ_s$; otherwise, set SETTING_SEARCH_WIN to '1'.
- If $NGHBR\_SRCH\_MODE_r$ = '00' or '01', set the SRCH_OFFSET_NGHBR field of each NGHBR_REC to '000'.
- If $NGHBR\_SRCH\_MODE_r$ = '10' or '11':
  - set the SRCH_WIN_NGHBR field of NGHBR_REC[i] to the ith occurrence of $SRCH\_WIN\_NGHBR_r$
  - if $SRCH\_OFFSET\_INCL_r$ equals '1', set the SRCH_OFFSET_NGHBR field of NGHBR_REC[i] to the ith occurrence of $SRCH\_OFFSET\_NGHBR_r$, and
  - if $SRCH\_OFFSET\_INCL_r$ equals '0', set the SRCH_OFFSET_NGHBR field of each NGHBR_REC to '000'.
- If USE_TIMING_r is equal to '1', set the TIMING_INCL field of NGHBR_REC[i] to the ith occurrence of $TIMING\_INCL_r$; otherwise, set the TIMING_INCL field of NGHBR_REC to '0' for all entries.
- If $BCCH\_IND\_INCL_r$ is equal to '1', set the BCCH_SUPPORT field of NGHBR_REC[i] to the ith occurrence of $BCCH\_SUPPORT_r$; otherwise, set the BCCH_IND_INCL field of NGHBR_REC to '0' for all entries.
- Set the NGHBR_PDCH_SUPPORTED field of NGHBR_REC[i] to the ith occurrence of $NGHBR\_PDCH\_SUPPORTED_r$ if included; otherwise, set the NGHBR_PDCH_SUPPORTED field of NGHBR_REC to '0' for all entries.
- The mobile station shall set $RESQ\_ENABLED_s = RESQ\_ENABLED_r$. If $RESQ\_ENABLED_s$ is equal to '1', then the mobile station shall store:
  - Call rescue delay timer value ($RESQ\_DELAY\_TIME_s = RESQ\_DELAY\_TIME_r$)

- Call rescue allowed timer value ($RESQ\_ALLOWED\_TIME_s$ = $RESQ\_ALLOWED\_TIME_r$)
- Call rescue attempt timer value ($RESQ\_ATTEMPT\_TIME_s$ = $RESQ\_ATTEMPT\_TIME_r$)
- Code channel index for call rescue ($RESQ\_CODE\_CHAN_s$ = $RESQ\_CODE\_CHAN_r$)
- Quasi-Orthogonal Function mask identifier for call rescue ($RESQ\_QOF_s$ = $RESQ\_QOF_r$)
- Minimum time between consecutive rescues ($RESQ\_MIN\_PERIOD_s$ = $RESQ\_MIN\_PERIOD_r$ + 1) if $RESQ\_MIN\_PERIOD\_INCL_r$ is equal to '1'; otherwise, $RESQ\_MIN\_PERIOD_s$ = '00000'.
- The required number of transmissions of a regular PDU before declaring L2 Acknowledgment Failure when Call Rescue is enabled ($RESQ\_NUM\_TOT\_TRANS\_20MS_s$ = $RESQ\_NUM\_TOT\_TRANS\_20MS_r$) if included; otherwise, set $RESQ\_NUM\_TOT\_TRANS\_20MS_s$ to N_{1m}.
- The required number of transmissions of a mini PDU before declaring L2 Acknowledgment Failure when Call Rescue is enabled ($RESQ\_NUM\_TOT\_TRANS\_5MS_s$ = $RESQ\_NUM\_TOT\_TRANS\_5MS_r$) if included; otherwise, set $RESQ\_NUM\_TOT\_TRANS\_5MS_s$ to N_{15m}.
- The Traffic Channel preamble length for Call Rescue Soft Handoff when operating in Radio Configuration 1 or 2 ($RESQ\_NUM\_PREAMBLE\_RC1\_RC2_s$ = $RESQ\_NUM\_PREAMBLE\_RC1\_RC2_r$).
- The Traffic Channel preamble length for Call Rescue Soft Handoff when operating in Radio Configuration greater than 2 ($RESQ\_NUM\_PREAMBLE_s$ = $RESQ\_NUM\_PREAMBLE_r$).
- The power level adjustment to be applied to the last closed-loop power level when re-enabling the transmitter for call rescue soft handoff ($RESQ\_POWER\_DELTA_s$ = $RESQ\_POWER\_DELTA_r$).
- Set the NGHBR_RESQ_CONFIGURED field of NGHBR_REC[i] to the ith occurrence of $NGHBR\_RESQ\_CONFIGURED_r$.

For each of the neighboring base stations contained in the *General Neighbor List Message*, if $FREQ\_FIELDS\_INCL_r$ equals '1', $FREQ\_INCL_r$ equals '1', and $NGHBR\_BAND_r$ is supported, the mobile station shall also perform the following:

- Set the NGHBR_BAND field of NGHBR_REC[i] to the ith occurrence of $NGHBR\_BAND_r$.
- Set the NGHBR_FREQ field of NGHBR_REC[i] to the ith occurrence of $NGHBR\_FREQ_r$.

For each of the neighboring base stations contained in the *General Neighbor List Message*, if USE_TIMING_r is equal to '1' and $TIMING\_INCL_r$ equals '1', the mobile station shall also perform the following:

- Set the NGHBR_TX_OFFSET field of NGHBR_REC[i] to the ith occurrence of $NGHBR\_TX\_OFFSET_r$.
- If $GLOBAL\_TIMING\_INCL_r$ is equal to '1', then the mobile station shall:
  - Set the NGHBR_TX_DURATION field of NGHBR_REC to $GLOBAL\_TX\_DURATION_r$ for all entries.
  - Set the NGHBR_TX_PERIOD field of NGHBR_REC to $GLOBAL\_TX\_PERIOD_r$ for all entries.
- If $GLOBAL\_TIMING\_INCL_r$ is equal to '0', then the mobile station shall:
  - Set the NGHBR_TX_DURATION field of NGHBR_REC[i] to the ith occurrence of $NGHBR\_TX\_DURATION_r$.
  - Set the NGHBR_TX_PERIOD field of NGHBR_REC[i] to the ith occurrence of $NGHBR\_TX\_PERIOD_r$.

For each of the neighboring base stations contained in the *General Neighbor List Message*, if $FREQ\_FIELDS\_INCL_r$ equals '1' and $FREQ\_INCL_r$ equals '0', or if $FREQ\_FIELDS\_INCL_r$ equals '0' and $EXT\_NGHBR\_LST\_MSG\_SEQ_s$ is not equal to $CONFIG\_MSG\_SEQ_r$, the mobile station shall also perform the following:

- Set the NGHBR_BAND field of NGHBR_REC[i] to $CDMABAND_s$.
- If $NGHBR\_CONFIG_r$ equals '010', set the NGHBR_FREQ field of NGHBR_REC[i] to the first CDMA Channel listed in the *CDMA Channel List Message or Extended CDMA Channel List Message* transmitted by the current base station; otherwise, set the NGHBR_FREQ field of NGHBR_REC[i] to $CDMACH_s$.

The mobile station shall set the ACCESS_ENTRY_HO field of the NGHBR_REC to '0' for all $NGHBR\_SET\_SIZE_s$ entries if any of the following conditions are met:

- $EXT\_SYS\_PARAMETER_s$ is equal to '0'
- $NGHBR\_SET\_ENTRY\_INFO_s$ is equal to '0', or
- $EXT\_SYS\_PAR\_MSG\_SEQ_s$ is not equal to $CONFIG\_MSG\_SEQ_s$.

The mobile station shall set the ACCESS_HO_ALLOWED field of the NGHBR_REC to '0' for all $NGHBR\_SET\_SIZE_s$ entries if any of the following conditions are met:

- $EXT\_SYS\_PARAMETER_s$ is equal to '0'
- $NGHBR\_SET\_ACCESS\_INFO_s$ is equal to '0', or
- $EXT\_SYS\_PAR\_MSG\_SEQ_s$ is not equal to $CONFIG\_MSG\_SEQ_s$.

The mobile station shall update the idle handoff Neighbor Set (see 2.6.2.1.4) so that it consists only of pilot offsets listed in the *General Neighbor List Message*. If the *General Neighbor List Message* contains more pilot offsets than the mobile station can store, the mobile station shall store the pilot offsets beginning at the start of the *General Neighbor List Message*, up to the limits of the mobile station's Neighbor Set storage capacity.

For each of the neighboring base stations contained in the *General Neighbor List Message*, the mobile station shall set the ADD_PILOT_REC_INCL field of NGHBR_REC[i] to the ith

occurrence of $ADD\_PILOT\_REC\_INCL_r$. If $ADD\_PILOT\_REC\_INCL_r$ equals '1', for each pilot included in the message, the mobile station shall also perform the following:

- Set the NGHBR_PILOT_REC_TYPE field of NGHBR_PILOT_REC to $NGHBR\_PILOT\_REC\_TYPE_r$.
- If $NGHBR\_PILOT\_REC\_TYPE_r$ is equal to '000'. The mobile station shall:
  - Set the TD_POWER_LEVEL field of NGHBR_PILOT_REC to $TD\_POWER\_LEVEL_r$.
  - Set the TD_MODE field of NGHBR_PILOT_REC to TD_MODE_r.
- If $NGHBR\_PILOT\_REC\_TYPE_r$ is equal to '001', the mobile station shall:
  - Set the AUX_PILOT_QOF field of NGHBR_PILOT_REC to QOF_r.
  - Set the AUX_PILOT_WALSH_CODE field of NGHBR_PILOT_REC to $AUX\_PILOT\_WALSH_r$ with the Walsh Code length specified by $WALSH\_LENGTH_r$.
- If $NGHBR\_PILOT\_REC\_TYPE_r$ is equal to '010', the mobile station shall:
  - Set the AUX_PILOT_QOF field of NGHBR_PILOT_REC to QOF_r.
  - Set the AUX_PILOT_WALSH_CODE field of NGHBR_PILOT_REC to $AUX\_PILOT\_WALSH_r$ with the Walsh Code length specified by $WALSH\_LENGTH_r$.
  - Set the AUX_TD_POWER_LEVEL field of NGHBR_PILOT_REC to $AUX\_TD\_POWER\_LEVEL_r$.
  - Set the TD_MODE field of NGHBR_PILOT_REC to TD_MODE_r.
- If $NGHBR\_PILOT\_REC\_TYPE_r$ is equal to '011', the mobile station shall:
  - Set the SR3_PRIMARY_PILOT field of NGHBR_PILOT_REC to $SR3\_PRIMARY\_PILOT_r$.
  - Set the SR3_PILOT_POWER1 field of NGHBR_PILOT_REC to $SR3\_PILOT\_POWER1_r$.
  - Set the SR3_PILOT_POWER2 field of NGHBR_PILOT_REC to $SR3\_PILOT\_POWER2_r$.
- If $NGHBR\_PILOT\_REC\_TYPE_r$ is equal to '100', the mobile station shall:
  - Set the SR3_PRIMARY_PILOT field of NGHBR_PILOT_REC to $SR3\_PRIMARY\_PILOT_r$.
  - Set the SR3_PILOT_POWER1 field of NGHBR_PILOT_REC to $SR3\_PILOT\_POWER1_r$.
  - Set the SR3_PILOT_POWER2 field of NGHBR_PILOT_REC to $SR3\_PILOT\_POWER2_r$.
  - Set the AUX_PILOT_QOF field of NGHBR_PILOT_REC to QOF_r.

- Set the AUX_PILOT_WALSH_CODE field of NGHBR_PILOT_REC to $AUX\_PILOT\_WALSH_r$ with the Walsh Code length specified by $WALSH\_LENGTH_r$.
- If $ADD\_INFO\_INCL1_r$ is equal to '1', set the AUX_PILOT_QOF1 field of NGHBR_PILOT_REC to $QOF1_r$ and set the AUX_PILOT_WALSH_CODE1 field of NGHBR_PILOT_REC to $AUX\_PILOT\_WALSH1_r$ with the Walsh Code length specified by $WALSH\_LENGTH1_r$.
- Otherwise, set the AUX_PILOT_QOF1 field of NGHBR_PILOT_REC to QOF_r and set the AUX_PILOT_WALSH_CODE1 field of NGHBR_PILOT_REC to $AUX\_PILOT\_WALSH_r$ with the Walsh Code length specified by $WALSH\_LENGTH_r$.
- If $ADD\_INFO\_INCL2_r$ is equal to '1', set the AUX_PILOT_QOF2 field of NGHBR_PILOT_REC to $QOF2_r$ and set the AUX_PILOT_WALSH_CODE2 field of NGHBR_PILOT_REC to $AUX\_PILOT\_WALSH2_r$ with the Walsh Code length specified by $WALSH\_LENGTH2_r$.
- Otherwise, set the AUX_PILOT_QOF2 field of NGHBR_PILOT_REC to QOF_r and set the AUX_PILOT_WALSH_CODE2 field of NGHBR_PILOT_REC to $AUX\_PILOT\_WALSH_r$ with the Walsh Code length specified by $WALSH\_LENGTH_r$.

If $HRPD\_NGHBR\_INCL_r$ equals '1', the mobile station shall set $NUM\_HRPD\_NGHBR_s$ to $NUM\_HRPD\_NGHBR_r$, the number of neighboring HRPD systems contained in the *General Neighbor List Message*. For each of the neighboring HRPD systems contained in the *General Neighbor List Message*, the mobile station shall perform the following:

- Set the PN field of HRPD_NGHBR_LIST[i] to the ith occurrence of $NGHBR\_PN_r$.
- Set the BAND_CLASS field of HRPD_NGHBR_LIST[i] to the ith occurrence of $NGHBR\_BAND_r$ if $NGHBR\_FREQ\_INCL_r$ equals '1'; otherwise, set the BAND_CLASS field of HRPD_NGHBR_LIST[i] to $CDMABAND_s$.
- Set the CDMA_FREQ field of HRPD_NGHBR_LIST[i] to the ith occurrence of $NGHBR\_FREQ_r$ if $NGHBR\_FREQ\_INCL_r$ equals '1'; otherwise, set the BAND_CLASS field of HRPD_NGHBR_LIST[i] to $CDMACH_s$.
- Set the PN_ASSOCIATION field of HRPD_NGHBR_LIST[i] to the ith occurrence of $PN\_ASSOCIATION\_IND_r$.
- Set the DATA_ASSOCIATION field of HRPD_NGHBR_LIST[i] to the ith occurrence of $DATA\_ASSOCIATION\_IND_r$.

2.6.2.2.9 User Zone Identification Message

Whenever a *User Zone Identification Message* is received on the Paging Channel or Primary Broadcast Control Channel, and if the mobile station supports Tiered Services, the mobile station shall compare the configuration message sequence number, $CONFIG\_MSG\_SEQ_r$, to that stored in $USER\_ZONE\_ID\_MSG\_SEQ_s$. If the comparison results in a match, the mobile station may ignore the message. If the comparison results in a mismatch, then the

mobile station shall process the remaining fields in the message as follows.

The mobile station shall store the following parameters:

- Configuration message sequence number ($CONFIG\_MSG\_SEQ_s = CONFIG\_MSG\_SEQ_r$, $USER\_ZONE\_ID\_MSG\_SEQ_s = CONFIG\_MSG\_SEQ_r$)
- $UZ\_EXIT\_RCVD_s = UZ\_EXIT_r$

The mobile station shall set NUM_UZID_s to the number of User Zones contained in the *User Zone Identification Message*.

For each User Zone contained in the *User Zone Identification Message*, the mobile station shall perform the following:

- Set the UZID field of UZ_REC(i) to the ith occurrence of $UZID_r$.
- Set the UZ_REV field of the UZ_REC(i) to the ith occurrence of UZ_REV_r.
- Set the TEMP_SUB field of the UZ_REC(i) to the ith occurrence of $TEMP\_SUB_r$.

2.6.2.2.10 Private Neighbor List Message

Whenever a *Private Neighbor List Message* is received on the Paging Channel or Primary Broadcast Control Channel, and if the mobile station supports Tiered Services, the mobile station shall compare the configuration message sequence number, $CONFIG\_MSG\_SEQ_r$, to that stored in $PRI\_NGHBR\_LST\_MSG\_SEQ_s$. If the comparison results in a match, the mobile station may ignore the message. If the comparison results in a mismatch, then the mobile station shall process the remaining fields in the message as follows.

The mobile station shall store the following parameters:

- Configuration message sequence number ($CONFIG\_MSG\_SEQ_s = CONFIG\_MSG\_SEQ_r$, $PRI\_NGHBR\_LST\_MSG\_SEQ_s = CONFIG\_MSG\_SEQ_r$)
- Common configuration included indicator ($COMMON\_INCL_s = COMMON\_INCL_r$)

The mobile station shall set $NUM\_PRI\_NGHBR_s$ to the number of Private Neighbor base stations contained in the *Private Neighbor List Message*.

For each Private Neighbor base station contained in the *Private Neighbor List Message* the mobile station shall perform the following:

- Set the SRCH_WIN_PRI_NGHBR field of PRI_NGHBR_REC(i) to $SRCH\_WIN\_PN_r$.
- Set the SID field of PRI_NGHBR_REC(i) to the ith occurrence SID_r.
- Set the NID field of PRI_NGHBR_REC(i) to the ith occurrence NID_r.
- Set the PRI_NGHBR_PN field of PRI_NGHBR_REC(i) to the ith occurrence $PRI\_NGHBR\_PN_r$.
- If $COMMON\_INCL_r$ is equal to '1', then the mobile station shall:
  - Set the BAND_CLASS field of PRI_NGHBR_REC(i) to $COMMON\_BAND\_CLASS_r$.

- Set the NGHBR_FREQ field of PRI_NGHBR_REC(i) to $COMMON\_NGHBR\_FREQ_r$.

- If $COMMON\_INCL_r$ is equal to '0', then the mobile station shall:
  - Set the BAND_CLASS field of PRI_NGHBR_REC(i) to the ith occurrence of $BAND\_CLASS_r$.
  - Set the NGHBR_FREQ field of PRI_NGHBR_REC(i) to the ith occurrence of $NGHBR\_FREQ_r$.
- If i^{th} occurrence of $UZID\_INCL_r$ is equal to '0', then the mobile station shall set the PS_NUM_UZID field of PRI_NGHBR_REC(i) to '0000'.
- If i^{th} occurrence of $UZID\_INCL_r$ is equal to '1', then the mobile station shall set the PS_NUM_UZID field of PRI_NGHBR_REC(i) to the NUM_UZID_r associated with the ith occurrence of $UZID\_INCL_r$.
- For each User Zone supported by the ith private system, the mobile station shall perform the following:
  - Set the PS_UZID(j) field of PRI_NGHBR_REC(i) to the jth occurrence of $UZID_r$.
  - Set the PS_UZ_REV(j) field of PRI_NGHBR_REC(i) to the jth occurrence of UZ_REV_r.
  - Set the PS_TEMP_SUB(j) field of PRI_NGHBR_REC(i) to the jth occurrence of $TEMP\_SUB_r$.

2.6.2.2.11 Extended Global Service Redirection Message

Whenever an *Extended Global Service Redirection Message* is received on the Paging Channel or Primary Broadcast Control Channel, the configuration message sequence number, $CONFIG\_MSG\_SEQ_r$, shall be compared to that stored in $EXT\_GLOB\_SERV\_REDIR\_MSG\_SEQ_s$. If the comparison results in a match, the mobile station may ignore the message. If the comparison results in a mismatch, the mobile station shall store the following parameters:

- Configuration message sequence number
  ($CONFIG\_MSG\_SEQ_s = CONFIG\_MSG\_SEQ_r$,
  $GLOB\_SERV\_REDIR\_MSG\_SEQ_s = CONFIG\_MSG\_SEQ_r$,
  $EXT\_GLOB\_SERV\_REDIR\_MSG\_SEQ_s = CONFIG\_MSG\_SEQ_r$)

The mobile station shall perform the following:

- The mobile station shall set ($RETURN\_IF\_FAIL_s = RETURN\_IF\_FAIL_r$), TEMP_TMSI_CODE to $TMSI\_CODE_{s-p}$, and clear the REDIRECT_REC_LIST. For i =1 to ($NUM\_ADD\_RECORD_r$ + 1), the mobile station shall perform the following:
  - If all the following conditions are satisfied from the ith redirection record:
    - The subfield corresponding to the access overload class, $ACCOLC_p$, of the mobile station is set equal to '1' in the $REDIRECT\_ACCOLC_r$ field or $ADD\_REDIRECT\_ACCOLC_r$ of the ith redirection record.

- MOB_P_REV$_p$ is in the redirection mobile protocol revision range associated with the ith redirection record (REDIRECT_P_REV_INCL$_r$ = '1' and EXCL_P_REV_IND$_r$ = '0', and (REDIRECT_P_MIN$_r$ ≤ MOB_P_REV$_p$ ≤ REDIRECT_P_MAX$_r$) where *i* is equal to 1).
- MOB_P_REV$_p$ is not in any of the excluded mobile protocol revision range associated with the ith redirection record (REDIRECT_P_REV_INCL$_r$ = '1' and EXCL_P_REV_IND$_r$ = '1' and (MOB_P_REV$_p$ < REDIRECT_P_MIN$_r$ or MOB_P_REV$_p$ > REDIRECT_P_MAX$_r$)).
- Type of redirection as specified by RECORD_TYPE$_r$ (*i* is equal to 1) or ADD_RECORD_TYPE$_r$ is supported.
- BAND_CLASS$_r$ is supported (RECORD_TYPE$_r$ = '00000010' or ADD_RECORD_TYPE$_r$ = '00000010').
- At least one of the CDMA_CHAN$_r$ is supported for at least one band subclass (when included) corresponding to REDIRECT_SUBCLASS$_r$ = '1'. (RECORD_TYPE$_r$ = '00000010' or ADD_RECORD_TYPE$_r$ = '00000010').

then mobile station shall store the following parameters from the redirection record:

- Set DELETE_TMSI field of REDIRECT_REC_LIST[*j*] to DELETE_TMSI$_r$ (*i* is equal to 1) or ADD_DELETE_TMSI$_r$, where j (i.e., the initial j value is set to 0) is incremented by 1 whenever the ith redirection record satisfies the redirection record selection conditions above.
- Set REDIRECT_REC_LIST[*j*] to the ith redirection record from the received message.
- Set RECORD_TYPE field of REDIRECT_REC_LIST[*j*] to RECORD_TYPE$_r$ (*i* is equal to 1) or ADD_RECORD_TYPE$_r$.
- If RECORD_TYPE$_r$ = '00000001' (*i* is equal to 1) or ADD_RECORD_TYPE$_r$ = '00000001', the mobile station shall:
  - Set CDMA_MODE$_s$ to '1'
  - Set DIGITAL_REG field of REDIRECT_REC_LIST[*j*] to '00000000'.
  - Set MAX_REDIRECT_DELAY field of REDIRECT_REC_LIST[*j*] to MAX_REDIRECT_DELAY$_r$.
- If LAST_SEARCH_RECORD_IND$_r$ or ADD_LAST_SEARCH_RECORD_IND$_r$ is equal to '1', the mobile station shall ignore the rest of the message.

• If REDIRECT_REC_LIST[*j*] is not empty, the mobile station shall enter the *System Determination Substate* of the *Mobile Station Initialization State* with a redirection indication (see 2.6.1.1); otherwise, the mobile station shall ignore the *Extended Global Service Redirection Message*.

2.6.2.2.12 Extended CDMA Channel List Message Overview

The mobile station may receive the *Extended CDMA Channel List Message* from the Paging Channel or from the Primary Broadcast Control Channel. The mobile station shall follow requirements defined in 2.6.2.2.12.1 or 2.6.2.2.12.2 to process the *Extended CDMA Channel List Message*.

2.6.2.2.12.1 Extended CDMA Channel List Message on Paging Channel

Whenever an *Extended CDMA Channel List Message* is received on the Paging Channel, the mobile station shall compare the configuration message sequence number, $CONFIG\_MSG\_SEQ_r$, to that stored in $EXT\_CHAN\_LST\_MSG\_SEQ_s$. If the comparison results in a match, the mobile station may ignore the message. If the comparison results in a mismatch, then the mobile station shall process the remaining fields in the message as follows:

If the *Extended CDMA Channel List Message* lists CDMA channels from more than one band class and the mobile station hashes to a band class other than the current band class, the mobile station shall process this message after $NGHBR\_LST\_MSG\_SEQ_s$, $EXT\_NGHBR\_LST\_MSG\_SEQ_s$ and $GEN\_NGHBR\_LST\_MSG\_SEQ_s$ become current.

The mobile station shall store the following parameters:

- Configuration message sequence number
  ($CONFIG\_MSG\_SEQ_s = CONFIG\_MSG\_SEQ_r$,
  $EXT\_CHAN\_LST\_MSG\_SEQ_s = CONFIG\_MSG\_SEQ_r$,
  $CHAN\_LST\_MSG\_SEQ_s = CONFIG\_MSG\_SEQ_r$).

The mobile station shall process this message if $FD\_CHAN\_LST\_SEQ_s$ is current and the mobile station does not support any bandclass listed by the base station in the *Flex Duplex CDMA Channel List Message* or if the mobile station does not support flexible spacing between forward and reverse channels. Otherwise, the mobile station shall ignore this message.

The mobile station shall determine the CDMA Channel (Frequency Assignment) for its Paging Channel as follows:

- Starting from an empty list, the mobile station shall generate the first CDMA Channel list from the *Extended CDMA Channel List Message* as follows:
  - For each band class record included in this message, the mobile station shall perform the following:
    - If band subclass information is included for this band class record ($SUBCLASS\_INFO\_INCL_r$ = '1' or $ADD\_SUBCLASS\_INFO\_INCL_r$ = '1'), the mobile station shall add only those channels belonging to the band class and band subclasses that are supported by both the mobile station and the

base station, in the order they appear in the *Extended CDMA Channel List Message*[7].

+ Otherwise (SUBCLASS_INFO_INCL$_r$ = '0', ADD_SUBCLASS_INFO_INCL$_r$ = '0' or P_REV_IN_USE$_s$ is less than 11), the mobile station shall add only those channels that it supports for the associated band class, in the order they appear in the *Extended CDMA Channel List Message*.

– If P_REV_IN_USE$_s$ is greater than or equal to 11, the mobile station shall sort the channels first by the ascending order of band class value, as specified in [30], then by the ascending order of CDMA_FREQ within each band class.

- If RC_QPCH_SEL_INCL$_r$ is equal to '1' and the mobile station is capable of RC greater than 2 or capable of supporting Quick Paging Channel, the mobile station shall eliminate the channels with RC_QPCH_HASH_IND$_r$ equal to '0' from the first CDMA Channel list to generate the second CDMA Channel list while preserving the order in the first CDMA Channel list. Otherwise, the mobile station shall set the second CDMA Channel list to be equal to the first CDMA Channel list.

- The mobile station shall generate the third CDMA Channel list as follows.

  – If CDMA_FREQ_WEIGHT_INCL$_r$ is equal to '0', the mobile station shall set the third CDMA Channel list to be equal to the second CDMA Channel list.

  – If CDMA_FREQ_WEIGHT_INCL$_r$ is equal to '1', starting with an empty third CDMA Channel list, for each entry "E" in the second CDMA Channel list in the order they appear, the mobile station shall append N consecutive entries "E" at the end of the third CDMA Channel list, where N is the weight of "E" and equals either CDMA_FREQ_WEIGHT$_r$+1 or ADD_CDMA_FREQ_WEIGHT$_r$+1 appropriately.

- The mobile station shall generate a CDMA band list as follows. Starting with an empty CDMA band list, for each channel in the third CDMA Channel list in the order they appear, the mobile station shall append an entry equal to the band class of that channel, at the end of the CDMA band list.

- The mobile station shall use the hash algorithm specified in 2.6.7.1 and the size of the CDMA band list to compute the band class for its Paging Channel.

- The mobile station shall eliminate those channels which are not in the computed band class from the third CDMA channel list to generate the final CDMA channel list.

---

[7] The mobile station will not discard frequencies as long as they belong to a subclass that is both listed in the message and supported by the mobile station. If the base station does not list any subclass, the mobile station assumes that all subclasses are supported by the base station. The subclass to frequency mapping is not provided in the *Extended CDMA Channel List Message*; the mobile station needs to refer to [45] to find the mapping.

- If the final CDMA Channel list is empty, the mobile station shall enter the *System Determination Substate* with an acquisition failure indication.
- The mobile station shall then use the hash algorithm specified in 2.6.7.1 and the size of the final CDMA channel list to determine the CDMA Channel (Frequency Assignment) for its Paging Channel.

Figure 2.6.2.2.12.1-1 shows an example of the hashing procedure.

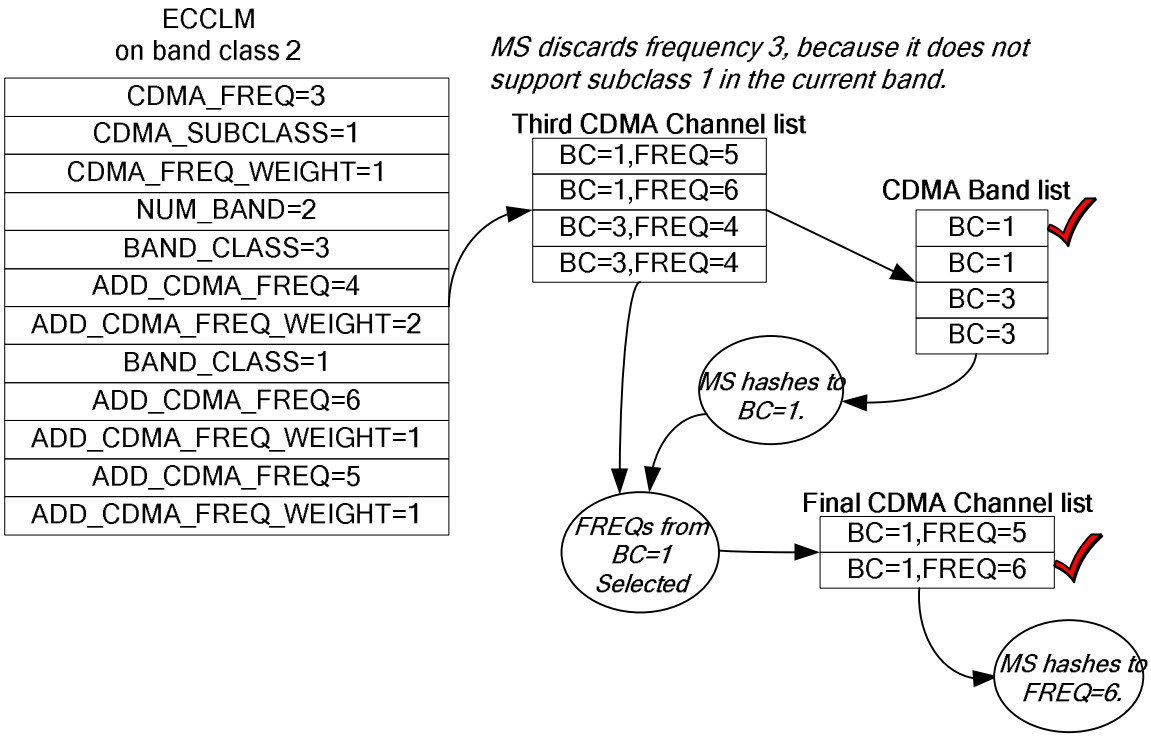

Figure 2.6.2.2.12.1-1. Hashing Example

If the CDMA Frequency Assignment has changed but the band class is the same (the computed CDMA Channel is different from $CDMACH_S$ but the computed CDMA band class is the same as $CDMABAND_S$), the mobile station shall perform the following actions:

- If the stored configuration parameters is not current (see 2.6.2.2) for the corresponding base station and frequency assignment, the mobile station shall perform the following actions:
  - Set $CDMACH_S$ to the new CDMA Channel.
  - Set $PAGE\_CHAN_S$ to '1'.
  - Set $PAGECH_S$ to the Primary Paging Channel.

- Set $CONFIG\_MSG\_SEQ_S$, $SYS\_PAR\_MSG\_SEQ_S$, $NGHBR\_LST\_MSG\_SEQ_S$, $CHAN\_LST\_MSG\_SEQ_S$, $EXT\_CHAN\_LST\_MSG\_SEQ_S$, $FD\_CHAN\_LST\_MSG\_SEQ_S$, $EXT\_NGHBR\_LST\_MSG\_SEQ_S$, $GEN\_NGHBR\_LST\_MSG\_SEQ_S$, $EXT\_SYS\_PAR\_MSG\_SEQ_S$, $GLOB\_SERV\_REDIR\_MSG\_SEQ_S$, $EXT\_GLOB\_SERV\_REDIR\_MSG\_SEQ_S$, $USER\_ZONE\_IDMSG\_SEQ_S$, $PRI\_NGHBR\_LST\_MSG\_SEQ_S$, and $ACC\_MSG\_SEQ_S$ to NULL. The mobile station shall keep the parameters associated with the current overhead messages until they are updated on the new Paging Channel[8].
- Tune to the new CDMA Channel.

- Otherwise, the mobile station shall perform the following actions:
  - Set $CDMACH_S$ to the new CDMA Channel.
  - The mobile station shall use the hash algorithm specified in 2.6.7.1 to select a new Paging Channel number in the range 1 to $PAGE\_CHAN_S$, where $PAGE\_CHAN_S$ is the value stored for the Paging Channel whose stored information is current. The mobile station shall store the new Paging Channel number as $PAGECH_S$.
  - Tune to the new CDMA Channel and shall begin monitoring the new Paging Channel.

If the band class has changed (the computed CDMA band class is different than $CDMABAND_S$), the mobile station shall perform the following actions:

- If $BYPASS\_SYS\_DET\_IND_S$ is equal to '0' for this CDMA channel, the mobile station shall perform the following:
  - Set NEW_BAND_RECORD.NEW_BAND_CLASS to the computed band class
  - Set NEW_BAND_RECORD.NEW_FREQ to the computed CDMA Channel
  - The mobile station shall enter the *System Determination Substate* of the *Mobile Station Initialization State* with a new band indication.
- If $BYPASS\_SYS\_DET\_IND_S$ is equal to '1' for this CDMA channel, the mobile station shall perform the following:
  - If the stored configuration parameters is not current (see 2.6.2.2) for the corresponding base station and frequency assignment, the mobile station shall perform the following actions:
    - Set $CDMACH_S$ to the new CDMA Channel.

---

[8] This is primarily needed when hashing to a band with a different coverage footprint than the current band. The current neighbor list is to be used to search for pilots in the hashed-to band. The search priorities are to be adjusted to take into account the hashed-to frequency (e.g., the pilots in the hashed-to frequency should have the highest priority).

+ Set $CDMABAND_S$ to the new band class.
+ Set $PAGE\_CHAN_S$ to '1'.
+ Set $PAGECH_S$ to the Primary Paging Channel.
+ Set $CONFIG\_MSG\_SEQ_S$, $SYS\_PAR\_MSG\_SEQ_S$, $NGHBR\_LST\_MSG\_SEQ_S$, $CHAN\_LST\_MSG\_SEQ_S$, $EXT\_CHAN\_LST\_MSG\_SEQ_S$, $FD\_CHAN\_LST\_MSG\_SEQ_S$, $EXT\_NGHBR\_LST\_MSG\_SEQ_S$, $GEN\_NGHBR\_LST\_MSG\_SEQ_S$, $EXT\_SYS\_PAR\_MSG\_SEQ_S$, $GLOB\_SERV\_REDIR\_MSG\_SEQ_S$, $EXT\_GLOB\_SERV\_REDIR\_MSG\_SEQ_S$, $USER\_ZONE\_IDMSG\_SEQ_S$, $PRI\_NGHBR\_LST\_MSG\_SEQ_S$, and $ACC\_MSG\_SEQ_S$ to NULL. The mobile station shall keep the parameters associated with the current overhead messages until they are updated on the new Paging Channel[9].
+ Tune to the new CDMA Channel.

– Otherwise, the mobile station shall perform the following actions:
+ Set $CDMACH_S$ to the new CDMA Channel.
+ Set $CDMABAND_S$ to the new band class.
+ The mobile station shall use the hash algorithm specified in 2.6.7.1 to select a new Paging Channel number in the range 1 to $PAGE\_CHAN_S$, where $PAGE\_CHAN_S$ is the value stored for the Paging Channel whose stored information is current. The mobile station shall store the new Paging Channel number as $PAGECH_S$.
+ Tune to the new CDMA Channel and shall begin monitoring the new Paging Channel.

2.6.2.2.12.2 Extended CDMA Channel List Message on Primary Broadcast Control Channel

Whenever the *Extended CDMA Channel List Message* is received on the Primary Broadcast Control Channel, the mobile station shall compare the configuration message sequence number, $CONFIG\_MSG\_SEQ_r$, to that stored in $CONFIG\_MSG\_SEQ_s$. If the comparison results in a match, the mobile station may ignore the message. If the comparison results in a mismatch, the mobile station shall process the remaining fields in the message as follows:

If the *Extended CDMA Channel List Message* lists CDMA channels from more than one band class and the mobile station hashes to a band class other than the current band

[9] This is primarily needed when hashing to a band with a different coverage footprint than the current band. The current neighbor list is to be used to search for pilots in the hashed-to band. The search priorities are to be adjusted to take into account the hashed-to frequency (e.g., the pilots in the hashed-to frequency should have the highest priority).

class, the mobile station shall process this message after $UNI\_NGHBR\_LST\_MSG\_SEQ_s$ becomes current.

The mobile station shall store the following parameters:

- Configuration message sequence number ($CONFIG\_MSG\_SEQ_s = CONFIG\_MSG\_SEQ_r$, $EXT\_CHAN\_LST\_MSG\_SEQ_s = CONFIG\_MSG\_SEQ_r$).

The mobile station shall process this message if $FD\_CHAN\_LST\_SEQ_s$ is current and the mobile station does not support any bandclass listed by the base station in the *Flex Duplex CDMA Channel List Message* or if the mobile station does not support flexible spacing between forward and reverse channels. Otherwise, the mobile station shall ignore this message.

To determine the CDMA Channel (Frequency Assignment) for its Primary Broadcast Control Channel, the mobile station shall first select a subset of CDMA channels from the *Extended CDMA Channel List Message* that will be used for channel hashing. The attributes for channel selection are support for that frequency, the band subclass (if included), RC greater than 2, Quick Paging Channel and transmit diversity. The mobile station shall first select the entire CDMA channel list for channel hashing. Starting from an empty list, the mobile station shall then select the first CDMA Channel list as follows:

- For each band class record included in this message, the mobile station shall perform the following:
  - If band subclass information is included for this band class record ($SUBCLASS\_INFO\_INCL_r$ = '1' or $ADD\_SUBCLASS\_INFO\_INCL_r$ = '1'), the mobile station shall add only those channels belonging to the band class and band subclasses that are supported by both the mobile station and the base station, in the order they appear in the *Extended CDMA Channel List Message*[10].
  - Otherwise ($SUBCLASS\_INFO\_INCL_r$ = '0', $ADD\_SUBCLASS\_INFO\_INCL_r$ = '0' or $P\_REV\_IN\_USE_s$ is less than 11), the mobile station shall add only those channels that it supports for the associated band class, in the order they appear in the *Extended CDMA Channel List Message*.
- If $P\_REV\_IN\_USE_s$ is greater than or equal to 11, the mobile station shall sort the channels first by the ascending order of band class value as specified in [30], then by the ascending order of CDMA_FREQ within each band class.
- If $TD\_SEL\_INCL_r$ is equal to '1', the mobile station shall perform the following:

[10] The mobile station will not discard frequencies as long as they belong to a subclass that is both listed in the message and supported by the mobile station. If the base station does not list any subclass, the mobile station assumes that all subclasses are supported by the base station. The subclass to frequency mapping is not provided in the *Extended CDMA Channel List Message*; the mobile station needs to refer to [45] to find the mapping.

- If the mobile station is capable of supporting the transmit diversity mode specified by TD_MODE_r, the mobile station shall select those CDMA channels that have $TD\_HASH\_IND_r$ set to '1' from the CDMA channel list for the first CDMA Channel list while preserving the order.

- If the mobile station is not capable of supporting the transmit diversity mode specified by TD_MODE_r, the mobile station shall select those CDMA channels that have $TD\_HASH\_IND_r$ set to '0' from the CDMA channel list for the first CDMA Channel list while preserving the order.

- If $TD\_SEL\_INCL_r$ is equal to '0', the mobile station shall select the entire list for the first CDMA Channel list.

From this first CDMA Channel list, the mobile station shall select the second CDMA Channel list as follows:

- If $RC\_QPCH\_SEL\_INCL_r$ is equal to '1' and the mobile station is capable of RC greater than 2 or capable of supporting QPCH, the mobile station shall select those CDMA channels with $RC\_QPCH\_HASH\_IND_r$ set to '1' for the second CDMA Channel list for CDMA channel hashing while preserving the order. If this list is empty, the mobile station shall use the first CDMA Channel list as the second CDMA Channel list for CDMA channel hashing.
- Otherwise, the mobile station shall use the first CDMA Channel list as the second CDMA Channel list for CDMA channel hashing.

From this second CDMA Channel list, the mobile station shall select the third CDMA Channel listsubset as follows:

- If $CDMA\_FREQ\_WEIGHT\_INCL_r$ is equal to '0', the mobile station shall set the third CDMA Channel list to be equal to the second CDMA Channel list
- If $CDMA\_FREQ\_WEIGHT\_INCL_r$ is equal to '1', starting with an empty third CDMA Channel list, for each entry "E" in the second CDMA Channel list in the order they appear, the mobile station shall append N consecutive entries "E" at the end of the third CDMA Channel, where N is the weight of "E" and equals either $CDMA\_FREQ\_WEIGHT_r$+1 or $ADD\_CDMA\_FREQ\_WEIGHT_r$+1 appropriately

The mobile station shall determine the band class for its Primary Broadcast Control Channel as follows:

- The mobile station shall generate a CDMA band list as follows. Starting with an empty CDMA band list, for each channel in the third CDMA Channel list in the order they appear, the mobile station shall append an entry equal to the band class of that channel, at the end of the CDMA band list
- The mobile station shall use the hash algorithm specified in 2.6.7.1 and the size of the CDMA band list to compute the band class for its Primary Broadcast Control Channel.

After the band class has been selected, the mobile station shall determine the CDMA Channel (Frequency Assignment) for its Primary Broadcast Control Channel as follows:

- The mobile station shall eliminate those channels which are not in the computed band class from the third CDMA Channel list to generate the final CDMA Channel list.
- If the final CDMA Channel list is empty, the mobile station shall enter the *System Determination Substate* with an acquisition failure indication
- The mobile station shall then use the hash algorithm specified in 2.6.7.1 with the number of channels in the final CDMA Channel list to determine the CDMA Channel (Frequency Assignment) for its Primary Broadcast Control Channel.

If the CDMA Frequency Assignment has changed but the band class is the same (the computed CDMA Channel is different from $CDMACH_S$ but the computed CDMA band class is $CDMABAND_S$), the mobile station shall perform the following:

- Set $CDMACH_S$ to the new CDMA Channel.
- Set $CONFIG\_MSG\_SEQ_S$, $A41\_SYS\_PAR\_MSG\_SEQ_S$, $MC\_RR\_PAR\_MSG\_SEQ_S$, $UNI\_NGHBR\_LST\_MSG\_SEQ_S$, $EXT\_CHAN\_LST\_MSG\_SEQ_S$, $FD\_CHAN\_LST\_MSG\_SEQ_S$, $USER\_ZONE\_ID\_MSG\_SEQ_S$, and $PRI\_NGHBR\_LST\_MSG\_SEQ_S$ and $ACC\_MSG\_SEQ_S$ to NULL. The mobile station shall keep the parameters associated with the current overhead messages until they are updated on the new Primary Broadcast Control Channel[11].
- If the mobile station is operating in the Spreading Rate 1:
  - If the assigned CDMA channel supports transmit diversity, the mobile station shall set the following fields corresponding to the assigned CDMA channel:
    - $SR1\_TD\_POWER\_LEVEL_S = TD\_POWER\_LEVEL_r$.
    - $SR1\_TD\_MODE_S = TD\_MODE_r$.
    - $BRAT_S = SR1\_BRAT\_TD_S$.
    - $BCCH\_CODE\_RATE_S = SR1\_CRAT\_TD_S$.
    - $BCCH_S = BCCH\_CODE\_CHAN\_TD_S$.
  - Otherwise, the mobile station shall set the following fields corresponding to the assigned CDMA channel:
    - $BRAT_S = SR1\_BRAT\_NON\_TD_S$,
    - $BCCH\_CODE\_RATE_S = SR1\_CRAT\_NON\_TD_S$,

[11] This is primarily needed when hashing to a band with a different coverage footprint than the current band. The current neighbor list is to be used to search for pilots in the hashed-to band. The search priorities are to be adjusted to take into account the hashed-to frequency (e.g., the pilots in the hashed-to frequency should have the highest priority).

+ $BCCH_S$ = BCCH_CODE_CHAN_NON_TD_S,

- Tune to the new CDMA Channel

If the band class has changed (the computed CDMA band class is different than $CDMABAND_S$), the mobile station shall perform the following actions:

- If $BYPASS\_SYS\_DET\_IND_r$ is equal to '0' for this CDMA channel, the mobile station shall perform the following:
  - Set NEW_BAND_RECORD.NEW_BAND_CLASS to the computed band class.
  - Set NEW_BAND_RECORD.NEW_FREQ to the computed CDMA Channel.
  - The mobile station shall enter the *System Determination Substate* of the *Mobile Station Initialization State* with a new band indication.
- If $BYPASS\_SYS\_DET\_IND_r$ is equal to '1' for this CDMA channel, the mobile station shall perform the following:
  - Set $CDMACH_S$ to the new CDMA Channel.
  - Set $CDMABAND_S$ to the new band class.
  - o Set $CONFIG\_MSG\_SEQ_S$, $A41\_SYS\_PAR\_MSG\_SEQ_S$, $MC\_RR\_PAR\_MSG\_SEQ_S$, $UNI\_NGHBR\_LST\_MSG\_SEQ_S$, $EXT\_CHAN\_LST\_MSG\_SEQ_S$, $FD\_CHAN\_LST\_MSG\_SEQ_S$, $USER\_ZONE\_ID\_MSG\_SEQ_S$, and $PRI\_NGHBR\_LST\_MSG\_SEQ_S$ and $ACC\_MSG\_SEQ_S$ to NULL. The mobile station shall keep the parameters associated with the current overhead messages until they are updated on the new Primary Broadcast Control Channel[12].
  - o If the mobile station is operating in the Spreading Rate 1:
    + If the assigned CDMA channel supports transmit diversity, the mobile station shall set the following fields corresponding to the assigned CDMA channel:
      - o $SR1\_TD\_POWER\_LEVEL_S$ = $TD\_POWER\_LEVEL_r$.
      - o $SR1\_TD\_MODE_S$ = TD_MODE_r.
      - o $BRAT_S$ = $SR1\_BRAT\_TD_S$.
      - o $BCCH\_CODE\_RATE_S$ = $SR1\_CRAT\_TD_S$.
      - o $BCCH_S$ = BCCH_CODE_CHAN_TD_S.

[12] This is primarily needed when hashing to a band with a different coverage footprint than the current band. The current neighbor list is to be used to search for pilots in the hashed-to band. The search priorities are to be adjusted to take into account the hashed-to frequency (e.g., the pilots in the hashed-to frequency should have the highest priority).

- Otherwise, the mobile station shall set the following fields corresponding to the assigned CDMA channel:
  - $BRAT_S$ = SR1_BRAT_NON_TD_S,
  - $BCCH\_CODE\_RATE_S$ = SR1_CRAT_NON_TD_S,
  - $BCCH_S$ = BCCH_CODE_CHAN_NON_TD_S,
- Tune to the new CDMA Channel

2.6.2.2.13 ANSI-41 System Parameters Message

Whenever an *ANSI-41 System Parameters Message* is received, the configuration message sequence number, $CONFIG\_MSG\_SEQ_r$, shall be compared to that stored in $A41\_SYS\_PAR\_MSG\_SEQ_S$. If the comparison results in a match, the mobile station may ignore the message. If the comparison results in a mismatch, then the mobile station shall process the remaining fields in the message as described in 2.6.2.2.13.1, 2.6.2.2.13.2, 2.6.2.2.13.3, and 2.6.2.2.13.4.

If REG_PRD is not within the valid range specified in 3.7.2.3.2.31, then the mobile station shall ignore the *ANSI-41 System Parameters Message* that contains it.

2.6.2.2.13.1 Stored Parameters

The mobile station shall store the following parameters:

- Configuration message sequence number ($CONFIG\_MSG\_SEQ_S$ = $CONFIG\_MSG\_SEQ_r$, $A41\_SYS\_PAR\_MSG\_SEQ_S$ = $CONFIG\_MSG\_SEQ_r$)
- Home registration indicator ($HOME\_REG_S$ = $HOME\_REG_r$)
- SID roamer registration indicator ($FOR\_SID\_REG_S$ = $FOR\_SID\_REG_r$)
- NID roamer registration indicator ($FOR\_NID\_REG_S$ = $FOR\_NID\_REG_r$)
- Power-up registration indicator ($POWER\_UP\_REG_S$ = $POWER\_UP\_REG_r$)
- Power-down registration indicator ($POWER\_DOWN\_REG_S$ = $POWER\_DOWN\_REG_r$)
- Parameter-change registration indicator ($PARAMETER\_REG_S$ = $PARAMETER\_REG_r$)
- Preferred Enhanced Access Channel MSID type ($PREF\_MSID\_TYPE_S$ = $PREF\_MSID\_TYPE_r$)
- Extended Preferred Enhanced Access Channel MSID type ($EXT\_PREF\_MSID\_TYPE_S$ = $EXT\_PREF\_MSID\_TYPE_r$), if included; otherwise, set $EXT\_PREF\_MSID\_TYPE_S$ to NULL.
- MEID Required indicator is included ($MEID\_REQD_S$ = $MEID\_REQD_r$), if included; otherwise, set $MEID\_REQD_S$ to ‘0’
- The mobile station shall set its operational IMSI, IMSI_O, as follows:
  - If $IMSI\_T\_SUPPORTED_r$ is equal to ‘0’, the mobile station shall set IMSI_O to $IMSI\_M_p$.

- If $IMSI\_T\_SUPPORTED_r$ is equal to '1' and the mobile station's $IMSI\_T_p$ has been programmed, the mobile station shall set IMSI_O to $IMSI\_T_p$.
- If $IMSI\_T\_SUPPORTED_r$ is equal to '1' and the mobile station's $IMSI\_T_p$ has not been programmed, the mobile station shall set IMSI_O to $IMSI\_M_p$.
- If IMSI_O has been changed, the mobile station shall set $MC\_RR\_PAR\_MSG\_SEQ_s$, $EXT\_CHAN\_LST\_MSG\_SEQ_s$, $FD\_CHAN\_LST\_MSG\_SEQ_s$ to NULL and set NUM_FCCCH_s to '1' and $FCCCH\_ID_s$ to '1'.

- If $OTHER\_INFO\_INCL_r$ is set to '1', the mobile station shall store:
  - Base station identification ($BASE\_ID_s = BASE\_ID_r$)
  - If MCC_r = '1111111111' and $IMSI\_11\_12_r$ = '1111111', the mobile station shall set the IMSI_O to $IMSI\_M_p$ and store:
    - Mobile Country Code ($MCC_s = MCC\_M_p$) and
    - IMSI 11th and 12th digits ($IMSI\_11\_12_s = IMSI\_M\_11\_12_p$);
  - Otherwise, the mobile station shall store:
    - Mobile Country Code ($MCC_s = MCC_r$) and
    - IMSI 11th and 12th digits ($IMSI\_11\_12_s = IMSI\_11\_12_r$).
  - Broadcast GPS assist indicator ($BROADCAST\_GPS\_ASST_s = BROADCAST\_GPS\_ASST_r$)
  - Signaling encryption supported indicator ($SIG\_ENCRYPT\_SUP_s = SIG\_ENCRYPT\_SUP_r$)
- Least significant digit of MNC ($IMSI\_10_s = IMSI\_10_r$), if included.
- If IMSI_O is set to the IMSI_M, the mobile station shall set:
  - $IMSI\_O\_S_s$ to $IMSI\_M\_S_p$ (i.e., $IMSI\_O\_S1_s$ to $IMSI\_M\_S1_p$ and $IMSI\_O\_S2_s$ to $IMSI\_M\_S2_p$)
  - $IMSI\_O\_11\_12_s$ to $IMSI\_M\_11\_12_p$
  - MCC_O_s to MCC_M_p
  - $IMSI\_O\_ADDR\_NUM_s$ to $IMSI\_M\_ADDR\_NUM_p$
- If IMSI_O is set to the IMSI_T, the mobile station shall set:
  - $IMSI\_O\_S_s$ to $IMSI\_T\_S_p$ (i.e., $IMSI\_O\_S1_s$ to $IMSI\_T\_S1_p$ and $IMSI\_O\_S2_s$ to $IMSI\_T\_S2_p$).
  - $IMSI\_O\_11\_12_s$ to $IMSI\_T\_11\_12_p$
  - MCC_O_s to MCC_T_p
  - $IMSI\_O\_ADDR\_NUM_s$ to $IMSI\_T\_ADDR\_NUM_p$
- Delete foreign TMSI ($DELETE\_FOR\_TMSI_s = DELETE\_FOR\_TMSI_r$)

- Use TMSI ($USE\_TMSI_s = USE\_TMSI_r$)
- TMSI zone length ($TMSI\_ZONE\_LEN_s = TMSI\_ZONE\_LEN_r$)
- TMSI zone number ($TMSI\_ZONE_s = TMSI\_ZONE_r$)
- Maximum number of alternative service options ($MAX\_NUM\_ALT\_SO_s = MAX\_NUM\_ALT\_SO_r$).
- The mobile station shall set all bits of $TMSI\_CODE_{s-p}$ to '1' if all of the following conditions are met:
  - The bits of $TMSI\_CODE_{s-p}$ are not all equal to '1',
  - $DELETE\_FOR\_TMSI_s$ is equal to '1', and
  - $ASSIGNING\_TMSI\_ZONE\_LEN_{s-p}$ is not equal to $TMSI\_ZONE\_LEN_s$, or the least significant $ASSIGNING\_TMSI\_ZONE\_LEN_{s-p}$ octets of $ASSIGNING\_TMSI\_ZONE_{s-p}$ are not equal to $TMSI\_ZONE_s$.
- Message integrity supported indicator ($MSG\_INTEGRITY\_SUP_s = MSG\_INTEGRITY\_SUP_r$), if $P\_REV\_IN\_USE_s$ is greater than or equal to 10; otherwise, $MSG\_INTEGRITY\_SUP_s = 0$.
- If $MSG\_INTEGRITY\_SUP_r$ is equal to '1' and $SIG\_INTEGRITY\_SUP\_INCL_r$ is equal to '1', the mobile station shall store the message integrity algorithms that the base station supports ($SIG\_INTEGRITY\_SUP_s = SIG\_INTEGRITY\_SUP_r$); otherwise, the mobile station shall set $SIG\_INTEGRITY\_SUP_s$ to '00000000'.

If the mobile station supports packet data service options, the mobile station shall store the packet data services zone identifier ($PACKET\_ZONE\_ID_s = PACKET\_ZONE\_ID_r$); otherwise, the mobile station shall set $PACKET\_ZONE\_ID_s$ to '00000000'.

If the mobile station supports packet data service options and the PZ_HYST_ENABLED field is included, the mobile station shall store the packet zone hysteresis enabled indicator ($PZ\_HYST\_ENABLED_s = PZ\_HYST\_ENABLED_r$); otherwise, the mobile station shall set $PZ\_HYST\_ENABLED_s$ to '1'.

If the mobile station supports packet data service options and the PZ_HYST_LIST_LEN field is included, the mobile station shall store the packet zone hysteresis list length ($PZ\_HYST\_LIST\_LEN_s = PZ\_HYST\_LIST\_LEN_r$); otherwise, the mobile station shall set $PZ\_HYST\_LIST\_LEN_s$ to 4.

If the mobile station supports packet data service options and the PZ_HYST_ACT_TIMER field is included, the mobile station shall store the packet zone hysteresis activation timer ($PZ\_HYST\_ACT\_TIMER_s = PZ\_HYST\_ACT\_TIMER_r$); otherwise, the mobile station shall set $PZ\_HYST\_ACT\_TIMER_s$ to 30 seconds.

If the mobile station supports packet data service options and the PZ_HYST_TIMER_MUL field and the PZ_HYST_TIMER_EXP field are included, the mobile station shall store the packet zone hysteresis timer ($PZ\_HYST\_TIMER_s = PZ\_HYST\_TIMER\_MUL_r \times 8 \wedge PZ\_HYST\_TIMER\_EXP_r$); otherwise, the mobile station shall set $PZ\_HYST\_TIMER_s$ to 60 seconds.

If the mobile station supports the *Device Information Message* on the r-csch, the mobile

station shall store:

- Autonomous message supported indicator ($AUTO\_MSG\_SUPPORTED_s$= $AUTO\_MSG\_SUPPORTED_r$)

If $AUTO\_MSG\_SUPPORTED_r$ is equal to '1' and the mobile station supports *the Device Information Message* on the r-csch, the mobile station shall store:

- Autonomous message interval ($AUTO\_MSG\_INTERVAL_s$ = $AUTO\_MSG\_INTERVAL_r$)

The mobile station shall store concurrent service supported indicator ($CS\_SUPPORTED_s$= $CS\_SUPPORTED_r$).

Maximum number of additional service reference identifiers allowed in origination ($MAX\_ADD\_SERV\_INSTANCE_s$ = $MAX\_ADD\_SERV\_INSTANCE_r$), if included; otherwise, the mobile station shall set $MAX\_ADD\_SERV\_INSTANCE_s$ to 0.

The mobile station shall store mobile station initiated position location determination supported indicator ($MS\_INIT\_POS\_LOC\_SUP\_IND_s$ = $MS\_INIT\_POS\_LOC\_SUP\_IND_r$).

The mobile station shall also perform the following:

- If the mobile station is not in the *Origination Attempt Substate*, or *Page Response Substate*, the mobile station shall store the following prior to storing the remaining parameters:
  - Registered system identification (REG_SID_s = SID_s).
  - Registered network identification (REG_NID_s = NID_s).
  - Registered registration zone ($REG\_REG\_ZONE_s$ = REG_ZONE_s).
  - Registered zone timer length ($REG\_ZONE\_TIMER_s$ = $ZONE\_TIMER_r$).
- System identification (SID_s = SID_r)
- Network identification (NID_s = NID_r)
- Registration zone (REG_ZONE_s = REG_ZONE_r)
- Number of registration zones to be retained ($TOTAL\_ZONES_s$ = $TOTAL\_ZONES_r$)
- Zone timer length ($ZONE\_TIMER_s$ = $ZONE\_TIMER_r$)
- Multiple SID storage indicator ($MULT\_SIDS_s$ = $MULT\_SIDS_r$)
- Multiple NID storage indicator ($MULT\_NIDS_s$ = $MULT\_NIDS_r$)
- Registration period (REG_PRD_s = REG_PRD_r)
- If DIST_REG_INCL is equal to '1', the mobile station shall store:
  - Registration distance (REG_DIST_s = REG_DIST_r)
- If DIST_REG_INCL is equal to '0', then the mobile station shall set REG_DIST_s equal to '00000000000'.

- If $TKZ\_MODE\_SUPPORTED_r$ is not included, the mobile station shall set $TKZ\_MODE\_SUPPORTED_s$ to '0'; otherwise, the mobile station shall set $TKZ\_MODE\_SUPPORTED_s$ to $TKZ\_MODE\_SUPPORTED_r$. If $TKZ\_MODE\_SUPPORTED_s$ is equal to '1', the mobile station shall store the tracking zone identifier ($TKZ\_ID_s = TKZ\_ID_r$).

The mobile station shall ignore any fields at the end of the *ANSI-41 System Parameters Message* that are not defined according to the protocol revision level ($MOB\_P\_REV_p$ of the current band class) being used by the mobile station.

2.6.2.2.13.2 Roaming Status

The mobile station shall determine the roaming status for the mobile station (see 2.6.5.3). The mobile station should indicate to the user whether the mobile station is roaming.

2.6.2.2.13.3 Registration

The mobile station shall update stored variables and perform other registration procedures as specified in 2.6.5.5.2.2.

2.6.2.2.13.4 PACA Disable for SID Change

If $PACA_s$ is equal to enabled, and SID_s is not equal to $PACA\_SID_s$, the mobile station shall set $PACA_s$ to disabled and PACA_CANCEL to '0', shall disable the PACA state timer, and should indicate to the user that the PACA call has been canceled

2.6.2.2.14 MC-RR Parameters Message

Whenever an *MC-RR Parameters Message* is received, the configuration message sequence number, $CONFIG\_MSG\_SEQ_r$, shall be compared to that stored in $MC\_RR\_PAR\_MSG\_SEQ_s$. If the comparison results in a match, the mobile station may ignore the message. If the comparison results in a mismatch, then the mobile station shall process the remaining fields in the message as described in 2.6.2.2.14.1, 2.6.2.2.14.2, and 2.6.2.2.14.3.

If the protocol revision level supported by the mobile station ($MOB\_P\_REV_p$) is less than the minimum protocol revision level supported by the base station ($MIN\_P\_REV_r$), the mobile station shall enter the *System Determination Substate* of the *Mobile Station Initialization State* with a protocol mismatch indication (see 2.6.1.1).

If BASE_LAT, BASE_LONG, or PWR_REP_THRESH is not within the valid ranges specified in 3.7.2.3.2.31, then the mobile station shall ignore the *MC-RR Parameters Message* that contains them.

If the mobile station supports Spreading Rate 3 on the common channel and $SR3\_INCL_s$ is equal to '1', the mobile station shall set:

- $BRAT_s = SR3\_BRAT_r$,
- $BCCH_s = SR3\_BCCH\_CODE\_CHAN_r$;
- $BCCH\_CODE\_RATE_s = 1/3$;

- $SR3\_PRIMARY\_PILOT_s = SR3\_PRIMARY\_PILOT_r$;
- $SR3\_PILOT\_POWER1_s = SR3\_PILOT\_POWER1_r$;
- $SR3\_PILOT\_POWER2_s = SR3\_PILOT\_POWER2_r$;
- If $SR3\_CENTER\_FREQ\_INCL_r$ is equal to '1', $POTENTIAL\_CDMACH_s = SR3\_CENTER\_FREQ_r$.

If $POTENTIAL\_CDMACH_s$ is different from $CDMACH_s$, the mobile station shall set $CDMACH_s = POTENTIAL\_CDMACH_s$ and then tune to the CDMA Channel ($CDMACH_s$).

2.6.2.2.14.1 Stored Parameters

The mobile station shall store the following parameters:

- Configuration message sequence number ($CONFIG\_MSG\_SEQ_s = CONFIG\_MSG\_SEQ_r$, $MC\_RR\_PAR\_MSG\_SEQ_s = CONFIG\_MSG\_SEQ_r$)
- Base station identification ($BASE\_ID_s = BASE\_ID_r$)
- Protocol revision level ($P\_REV_s = P\_REV_r$)
- Protocol revision level currently in use ($P\_REV\_IN\_USE_s$ = the lesser value of P_REV_s and $MOB\_P\_REV_p$ of the current band class)
- Minimum protocol revision level ($MIN\_P\_REV_s = MIN\_P\_REV_r$).
- Search window size for the Active Set and Candidate Set ($SRCH\_WIN\_A_s = SRCH\_WIN\_A_r$)
- Search window size for the Remaining Set ($SRCH\_WIN\_R_s = SRCH\_WIN\_R_r$)
- Pilot detection threshold ($T\_ADD_s = T\_ADD_r$)
- Pilot drop threshold ($T\_DROP_s = T\_DROP_r$)
- Active Set versus Candidate Set comparison threshold ($T\_COMP_s = T\_COMP_r$)
- Drop timer value ($T\_TDROP_s = T\_TDROP_r$)
- Drop timer range value ($T\_TDROP\_RANGE_s = T\_TDROP\_RANGE_r$) if $T\_TDROP\_RANGE\_INCL_r$ is equal to '1'; otherwise, $T\_TDROP\_RANGE_s$ = '0000'
- Maximum age for retention of Neighbor Set members ($NGHBR\_MAX\_AGE_s = NGHBR\_MAX\_AGE_r$)
- Slope of the handoff add/drop criterion ($SOFT\_SLOPE_s = SOFT\_SLOPE_r$)
- Intercept of the handoff add criterion ($ADD\_INTERCEPT_s = ADD\_INTERCEPT_r$)
- Intercept of the handoff drop criterion ($DROP\_INTERCEPT_s = DROP\_INTERCEPT_r$)
- If $ENC\_SUPPORTED_r$ is equal to '1', the mobile station shall store:
  - Signaling encryption supported indicator ($SIG\_ENCRYPT\_SUP_s = SIG\_ENCRYPT\_SUP_r$)

– User information encryption supported indicator ($UI\_ENCRYPT\_SUP_s$ = $UI\_ENCRYPT\_SUP_r$)

If $P\_REV\_IN\_USE_s$ has been changed, the mobile station shall set $ACC\_MSG\_SEQ_s$, CURR_ACC_MSG_SEQ, $A41\_SYS\_PAR\_MSG\_SEQ_s$, $UNI\_NGHBR\_LST\_MSG\_SEQ_s$, and $EXT\_GLOB\_SERV\_REDIR\_MSG\_SEQ_s$ to NULL.

If $CCH\_INFO\_INCL_r$ is equal to '1', the mobile station shall store:

- If MCC_r = '1111111111' and $IMSI\_11\_12_r$ = '1111111', the mobile station shall set the IMSI_O to $IMSI\_M_p$ and store:
  - Mobile Country Code (MCC_s = MCC_M_p) and
  - IMSI 11th and 12th digits ($IMSI\_11\_12_s$ = $IMSI\_M\_11\_12_p$);
- Otherwise, the mobile station shall store:
  - Mobile Country Code (MCC_s = MCC_r) and
  - IMSI 11th and 12th digits ($IMSI\_11\_12_s$ = $IMSI\_11\_12_r$).
- Least significant digit of MNC ($IMSI\_10_s$ = $IMSI\_10_r$), if included.
- If IMSI_O has been changed, the mobile station shall set $EXT\_CHAN\_LST\_MSG\_SEQ_s$, $FD\_CHAN\_LST\_MSG\_SEQ_s$ to NULL, and set NUM_FCCCH_s to '1' and $FCCCH\_ID_s$ to '1'.
- *Extended Global Service Redirection Message* sent ($EXT\_GLOBAL\_REDIRECT_s$ = $EXT\_GLOBAL\_REDIRECT_r$) if included; otherwise, $EXT\_GLOBAL\_REDIRECT_s$ = '0'
- *User Zone Identification Message* sent ($USER\_ZONE\_ID_s$ = $USER\_ZONE\_ID_r$) if included; otherwise, $USER\_ZONE\_ID_s$ = '0'
- *Private Neighbor List Message* sent ($PRI\_NGHBR\_LST_s$ = $PRI\_NGHBR\_LST_r$) if included; otherwise, $PRI\_NGHBR\_LST_s$ = '0'
- *ANSI-41 RAND Message* sent ($SENDING\_RAND_s$ = $SENDING\_RAND_r$) if included; otherwise, $SENDING\_RAND_s$ = '0'
- *Access Point Pilot Information Message* sent ($AP\_PILOT\_INFO_s$ = $AP\_PILOT\_INFO_r$) if included; otherwise, $AP\_PILOT\_INFO_s$ = '0'

  If the APPIM_PERIOD_INDEX is included in the message $APPIM\_PERIOD\_INDEX_s$ = $APPIM\_PERIOD\_INDEX_r$. Otherwise, $APPIM\_PERIOD\_INDEX_s$= 0.
- *Access Point Identification Message* sent (AP_IDT_s = AP_IDT_r) if included; otherwise, AP_IDT_s = '0'
- *Access Point Identification Text Message* sent ($AP\_ID\_TEXT_s$ = $AP\_ID\_TEXT_r$) if included; otherwise, $AP\_ID\_TEXT_s$ = '0'

- *General Overhead Information Message* sent ($GEN\_OVHD\_INF\_IND_s = GEN\_OVHD\_INF\_IND_r$) if included; otherwise, $GEN\_OVHD\_INF\_IND_s$ = '0'

  If the GEN_OVHD_CYCLE_INDEX is included in the message $GEN\_OVHD\_CYCLE\_INDEX_s = GEN\_OVHD\_CYCLE\_INDEX_r$. Otherwise, $GEN\_OVHD\_CYCLE\_INDEX_s = 0$.

- *Flex Duplex CDMA Channel List Message* sent ($FD\_CHAN\_LST\_IND_s = FD\_CHAN\_LST\_IND_r$) if included; otherwise, $FD\_CHAN\_LST\_IND_s$ = '0'.

- *Alternative Technologies Information Message* sent ($ATIM\_IND_s = ATIM\_IND_r$) if included; otherwise, $ATIM\_IND_s$ = '0'

  If the ATIM_CYCLE_INDEX is included in the message $ATIM\_CYCLE\_INDEX_s = ATIM\_CYCLE\_INDEX_r$.

  Otherwise, $ATIM\_CYCLE\_INDEX_s = 0$.

- Maximum slot cycle index ($MAX\_SLOT\_CYCLE\_INDEX_s = MAX\_SLOT\_CYCLE\_INDEX_r$)

- *BCMC Service Parameters Message* sent ($SENDING\_BSPM_s = SENDING\_BSPM_r$), if included; otherwise, set $SENDING\_BSPM_s$ to '0'.

- *BCMC Service Parameters Message* transmission periodicity index ($BSPM\_PERIOD\_INDEX_s = BSPM\_PERIOD\_INDEX_r$) if $SENDING\_BSPM_r$ equals '1'; otherwise, $BSPM\_PERIOD\_INDEX_s$ = NULL.

- $BSPM\_PERIOD\_INDEX_s$ is not equal to NULL, the mobile station shall set BSPM_WAIT_TIME to $(B + 1) \times 160$ms where

  $$B = 2^i \times 16,\ 0 \le i \le 15$$

  and $i = BSPM\_PERIOD\_INDEX_s$.

- Power control reporting threshold ($PWR\_REP\_THRESH_s = PWR\_REP\_THRESH_r$)
- Power control reporting frame count ($PWR\_REP\_FRAMES_s = PWR\_REP\_FRAMES_r$)
- Threshold report mode indicator ($PWR\_THRESH\_ENABLE_s = PWR\_THRESH\_ENABLE_r$)
- Periodic report mode indicator ($PWR\_PERIOD\_ENABLE_s = PWR\_PERIOD\_ENABLE_r$).
- Power report delay ($PWR\_REP\_DELAY_s = PWR\_REP\_DELAY_r$)
- System reselection indicator ($RESELECT\_INCLUDED_s = RESELECT\_INCLUDED_r$).
- Pilot reporting indicator ($PILOT\_REPORT_s = PILOT\_REPORT_r$)
- Short Data Burst supported indicator ($SDB\_SUPPORTED_s = SDB\_SUPPORTED_r$)

- Broadcast GPS Assist Indicator ($BROADCAST\_GPS\_ASST_s$ = $BROADCAST\_GPS\_ASST_r$)
- Nominal reverse traffic channel output power offset relative to Reverse Pilot Channel power ($RLGAIN\_TRAFFIC\_PILOT_s$ = $RLGAIN\_TRAFFIC\_PILOT_r$)
- If NUM_FCCCH_r is not equal to '0':
  - Number of the Forward Common Control Channels (NUM_FCCCH_s = NUM_FCCCH_r)
  - Data rate for the Forward Common Control Channels ($FCCCH\_RATE_s$ = $FCCCH\_RATE_r$)
  - Code rate for the Forward Common Control Channels ($FCCCH\_CODE\_RATE_s$ = $FCCCH\_CODE\_RATE_r$)
  - For i = 0 to NUM_FCCCH_r - 1, store the channel code index for each Forward Common Control Channel ($FCCCH\_CODE\_CHAN_s[i]$ = $FCCCH\_CODE\_CHAN_r$)
- Broadcast index ($BCAST\_INDEX_s$ = $BCAST\_INDEX_r$)
- The number of Broadcast Control Channels ($NUM\_BCCH\_BCAST_s$ = $NUM\_BCCH\_BCAST_r$)
- If $NUM\_BCCH\_BCAST_r$ is greater than '000', i occurrences of the following fields, where i ranges from 1 to $NUM\_BCCH\_BCAST_r$:
  - Set the Broadcast Control Channel Number (BCN) to i+1
  - BCCH Walsh code index ($BCCH\_CODE\_CHAN[BCN]_s$ = $BCCH\_CODE\_CHAN[i]_r$)
  - BCCH data rate ($BRAT[BCN]_s$ = $BRAT[i]_r$)
  - BCCH code rate ($BCCH\_CODE\_RATE[BCN]_s$ = $BCCH\_CODE\_RATE[i]_r$)
- Sync ID supported indicator ($USE\_SYNC\_ID_s$ = $USE\_SYNC\_ID_r$)
- Pilot information request supported indicator ($PILOT\_INFO\_REQ\_SUPPORTED_s$ = $PILOT\_INFO\_REQ\_SUPPORTED_r$).
- Band class information request indicator ($BAND\_CLASS\_INFO\_REQ_s$ = $BAND\_CLASS\_INFO\_REQ_r$)
- Alternate CDMA band class ($ALT\_BAND\_CLASS_s$ = $ALT\_BAND\_CLASS_r$), if $BAND\_CLASS\_INFO\_REQ_r$ is equal to '1'.
- Access entry handoff in order and message processing operation indicator ($ACC\_ENT\_HO\_ORDER_s$ = $ACC\_ENT\_HO\_ORDER_r$).
- If REV_PWR_CNTL_DELAY_INCL is equal to '1', reverse power control delay ($REV\_PWR\_CNTL\_DELAY_s$ = $REV\_PWR\_CNTL\_DELAY_r$)
- Permission indicator for the mobile station to request QoS settings in the *Origination Message*, *Origination Continuation Message*, or *Enhanced Origination Message* (MOB_QOS_s = MOB_QOS_r)
- If $RESELECT\_INCLUDED_s$ is equal to '1', the mobile station shall store:

- Pilot power threshold ($EC\_THRESH_S = EC\_THRESH_r$)
- Pilot E_C/I_0 threshold ($EC\_I0\_THRESH_S = EC\_I0\_THRESH_r$)

- Access handoff permitted indicator ($ACCESS\_HO_S = ACCESS\_HO_r$)
- Access probe handoff permitted indicator ($ACCESS\_PROBE\_HO_S = ACCESS\_PROBE\_HO_r$)
- If $ACCESS\_PROBE\_HO_S$ is equal to '1', access handoff list update permitted indicator ($ACC\_HO\_LIST\_UPD_S = ACC\_HO\_LIST\_UPD_r$)
- Maximum number of times that the mobile station is permitted to perform an access probe handoff ($MAX\_NUM\_PROBE\_HO_S = MAX\_NUM\_PROBE\_HO_r$)
- Access handoff permitted for message response indicator ($ACCESS\_HO\_MSG\_RSP_S = ACCESS\_HO\_MSG\_RSP_r$)
- Access probe handoff permitted for other messages indicator ($ACC\_PROBE\_HO\_OTHER\_MSG_S = ACC\_PROBE\_HO\_OTHER\_MSG_r$)
- If $USER\_ZONE\_ID_S$ is equal to '0', then the mobile station shall perform the following:
  - Set $USER\_ZONE\_ID\_MSG\_SEQ_S$ to $CONFIG\_MSG\_SEQ_S$.
  - Set the UZID field of the UZ_REC to '0000000000000000' for all entries.
  - Set the UZ_REV field of the UZ_REC to '0000' for all entries.
  - Set the TEMP_SUB field of the UZ_REC to '0' for all entries.
- If $USER\_ZONE\_ID_S$ is equal to '1' and the mobile station does not support Tiered Services, then the mobile station shall set $USER\_ZONE\_ID\_MSG\_SEQ_S$ to $CONFIG\_MSG\_SEQ_S$.
- If $PRI\_NGHBR\_LST_S$ is equal to '0', then the mobile station shall set $PRI\_NGHBR\_LST\_MSG\_SEQ_S$ to $CONFIG\_MSG\_SEQ_S$.
- If $PRI\_NGHBR\_LST_S$ is equal to '1' and the mobile station does not support Tiered Services, then the mobile station shall set $PRI\_NGHBR\_LST\_MSG\_SEQ_S$ to $CONFIG\_MSG\_SEQ_S$.
- If $EXT\_GLOBAL\_REDIRECT_S$ is equal to '0', then the mobile station shall set $EXT\_GLOB\_SERV\_REDIR\_MSG\_SEQ_S$ to $CONFIG\_MSG\_SEQ_S$.
- The mobile station shall perform the following:
  - If $SENDING\_RAND_S$ is equal to '1', the mobile station shall set $AUTH_S$ to '01'; otherwise, the mobile station shall set $AUTH_S$ to '00'.
- The mobile station shall store the following:
  - Base station latitude ($BASE\_LAT_S = BASE\_LAT_r$)
  - Base station longitude ($BASE\_LONG_S = BASE\_LONG_r$)

- If $CAND\_BAND\_INFO\_REQ_r$ is included, the mobile station shall set $CAND\_BAND\_INFO\_REQ_s$ to $CAND\_BAND\_INFO\_REQ_r$; otherwise, the mobile station shall set $CAND\_BAND\_INFO\_REQ_s$ to '0'.
- If $CAND\_BAND\_INFO\_REQ_r$ is set to '1', the mobile station shall store the number of candidate band classes minus one ($NUM\_CAND\_BAND\_CLASS_s$ = $NUM\_CAND\_BAND\_CLASS_r$).
- If $CAND\_BAND\_INFO\_REQ_r$ is set to '1', the mobile station shall perform the following for each occurrence of the CAND_BAND_CLASS record:
  - Set the CAND_BAND_CLASS field of CAND_BAND_CLASS_REC[i] to the ith occurrence of $CAND\_BAND\_CLASS_r$.
  - Set the SUBCLASS_REC_LEN field of CAND_BAND_CLASS_REC[i] to the ith occurrence of $SUBCLASS\_REC\_LEN_r$.
  - If the ith occurrence of $SUBCLASS\_REC\_LEN_r$ field is non-zero, the mobile station shall perform the following for each band subclass indicator received:
    - Set the BAND_SUBCLASS_IND_REC[j] field of CAND_BAND_CLASS_REC[i] to the jth occurrence of $BAND\_SUBCLASS\_IND_r$.

If $TX\_PWR\_LIMIT\_INCL_r$ is set to '1' and the mobile station is operating in the 1915MHz – 1920MHz block of the PCS band, the mobile station shall store the transmit power limit $TX\_PWR\_LIMIT_s$ = ($TX\_PWR\_LIMIT_r$ - 30dB); otherwise, the mobile station shall set $TX\_PWR\_LIMIT_s$ to the limit defined in [11].

If $CCH\_INFO\_INCL_r$ is equal to '1' and the mobile station supports the Quick Paging Channel operation:

- The mobile station shall set $QPCH\_SUPPORTED_s$ to $QPCH\_SUPPORTED_r$.
- If $QPCH\_SUPPORTED_r$ = '1':
  - The mobile station shall set $QPCH\_RATE_s$ to $QPCH\_RATE_r$.
  - If the mobile station is monitoring the Primary Broadcast Control Channel in Spreading Rate 1 and the number of Quick Paging Channels specified in the received message (NUM_QPCH_r) is different from NUM_QPCH_s, the mobile station shall use the hash algorithm specified in 2.6.7.1 to select a new Quick Paging Channel number in the range 1 to NUM_QPCH_r. The mobile station shall store the new Quick Paging Channel number as $QPAGECH_s$ and as $ASSIGNED\_QPAGECH_s$. The mobile station shall then set NUM_QPCH_s to NUM_QPCH_r.
  - If the mobile station is monitoring the Primary Broadcast Control Channel in Spreading Rate 3 and the number of Quick Paging Channels specified in the received message (NUM_QPCH_r) is different from NUM_QPCH_s, the mobile station shall perform the following:
    - The mobile station shall use the hash algorithm specified in 2.6.7.1 to select a new Quick Paging Channel number in the range 1 to NUM_QPCH_r.

+ The mobile station shall store the new Quick Paging Channel number as $QPAGECH_s$ and as $ASSIGNED\_QPAGECH_s$.
+ For i = 0 to NUM_QPCH_s - 1, store the channel code index for each Quick Paging Channel ($QPCH\_CODE\_CHAN_s[i] = QPCH\_CODE\_CHAN_r$.

- The mobile station shall set $QPCH\_POWER\_LEVEL\_PAGE_s$ to $QPCH\_POWER\_LEVEL\_PAGE_r$.
- The mobile station shall set $QPCH\_CCI\_SUPPORTED_s$ to $QPCH\_CCI\_SUPPORTED_r$.
- If $QPCH\_CCI\_SUPPORTED_r$ = '1', the mobile station shall set $QPCH\_POWER\_LEVEL\_CONFIG_s$ to $QPCH\_POWER\_LEVEL\_CONFIG_r$.
- The mobile station shall set $QPCH\_BI\_SUPPORTED_s$ to $QPCH\_BI\_SUPPORTED_r$.
- If $QPCH\_BI\_SUPPORTED_r$ = '1', the mobile station shall set $QPCH\_POWER\_LEVEL\_BCAST_s$ to $QPCH\_POWER\_LEVEL\_BCAST_r$.

The mobile station shall store the following:

- CDMA off time report supported indicator ($CDMA\_OFF\_TIME\_REP\_SUP\_IND_s = CDMA\_OFF\_TIME\_REP\_SUP\_IND_r$)
- If $CDMA\_OFF\_TIME\_REP\_SUP\_IND_r$ is equal to '1', the mobile station shall store:
  - CDMA off time report threshold ($CDMA\_OFF\_TIME\_REP\_THRESHOLD_s = CDMA\_OFF\_TIME\_REP\_THRESHOLD_r$ in units specified by $CDMA\_OFF\_TIME\_REP\_UNIT_r$)
- Control Hold Mode supported indicator ($CHM\_SUPPORTED_s = CHM\_SUPPORTED_r$) if included; otherwise, set $CHM\_SUPPORTED_s$ to '1'.
- Release to Idle State allowed indicator ($RELEASE\_TO\_IDLE\_IND_s = RELEASE\_TO\_IDLE\_IND_r$).
- *Reconnect Message* supported indicator ($RECONNECT\_MSG\_IND_s = RECONNECT\_MSG\_IND_r$).
- Short Data Burst allowed in *Reconnect Message* allowed indicator ($SDB\_IN\_RCNM\_IND_s = SDB\_IN\_RCNM\_IND_r$), if included; otherwise, set $SDB\_IN\_RCNM\_IND_s$ to '0'.
- Forward Packet Data Channel supported indicator ($FOR\_PDCH\_SUPPORTED_s = FOR\_PDCH\_SUPPORTED_r$).
- PDCH Control Hold Mode supported indicator ($PDCH\_CHM\_SUPPORTED_s = PDCH\_CHM\_SUPPORTED_r$) if included; otherwise, set $PDCH\_CHM\_SUPPORTED_s$ to '0'.

The mobile station shall set $FOR\_PDCH\_COMMON\_PARMS_s$ = '0'.

If both $FOR\_PDCH\_SUPPORTED_r$ and $PDCH\_PARMS\_INCL_r$ are included and equal to '1', the mobile station shall perform the following:

- If $FOR\_PDCH\_RLGAIN\_INCL_r$ is included and equal to '1', the mobile station shall set:
  - ($RLGAIN\_ACKCH\_PILOT_s = RLGAIN\_ACKCH\_PILOT_r$).
  - ($RLGAIN\_CQICH\_PILOT_s = RLGAIN\_CQICH\_PILOT_r$).
- The mobile station shall set $NUM\_SOFT\_SWITCHING\_FRAMES_s = NUM\_SOFT\_SWITCHING\_FRAMES_r + 1$, and $NUM\_SOFTER\_SWITCHING\_FRAMES_s = NUM\_SOFTER\_SWITCHING\_FRAMES_r + 1$.
- The mobile station shall set $NUM\_SOFT\_SWITCHING\_FRAMES\_CHM_s = NUM\_SOFT\_SWITCHING\_FRAMES_r + 1$, and $NUM\_SOFTER\_SWITCHING\_FRAMES\_CHM_s = NUM\_SOFTER\_SWITCHING\_FRAMES_r + 1$.
- The mobile station shall set $NUM\_SOFT\_SWITCHING\_SLOTS_s$ according to Table 3.7.2.3.2.21-9 based on the value of $NUM\_SOFT\_SWITCHING\_SLOTS_r$.
- The mobile station shall set $NUM\_SOFTER\_SWITCHING\_SLOTS_s$ according to Table 3.7.2.3.2.21-9 based on the value of $NUM\_SOFTER\_SWITCHING\_SLOTS_r$.
- The mobile station shall set $PDCH\_SOFT\_SWITCHING\_DELAY_s$ to $PDCH\_SOFT\_SWITCHING\_DELAY_r + 1$, and $PDCH\_SOFTER\_SWITCHING\_DELAY_s$ to $PDCH\_SOFTER\_SWITCHING\_DELAY_r + 1$.
- The mobile station shall set $FOR\_PDCH\_COMMON\_PARMS_s$ = '1'.
- The mobile station shall set $WALSH\_TABLE\_ID_s = WALSH\_TABLE\_ID_r$.
- The mobile station shall set $NUM\_PDCCH_s = NUM\_PDCCH_r$.
- The mobile station shall store $FOR\_PDCCH\_WALSH_s[i]$ to the ith occurrence of $FOR\_PDCCH\_WALSH_r$.

The mobile station shall store the following:

- If $NEG\_SLOT\_CYCLE\_INDEX\_SUP_r$ is included and equal to '1', the mobile station shall set MIN_SLOT_CYCLE_INDEX to -4; otherwise, the mobile station shall set MIN_SLOT_CYCLE_INDEX to 0.
- If $RER\_MODE\_SUPPORTED_r$ is not included, the mobile station shall set $RER\_MODE\_SUPPORTED_s$ to '0'; otherwise, the mobile station shall set $RER\_MODE\_SUPPORTED_s$ to $RER\_MODE\_SUPPORTED_r$.
- If $AUTO\_FCSO\_ALLOWED_r$ is not included, the mobile station shall set $AUTO\_FCSO\_ALLOWED_s$ to '0'; otherwise, the mobile station shall set $AUTO\_FCSO\_ALLOWED_s$ to $AUTO\_FCSO\_ALLOWED_r$.

If $FOR\_PDCH\_SUPPORTED_r$ is equal to '1', then the mobile station shall set Reverse Packet Data Channel supported indicator ($REV\_PDCH\_SUPPORTED_s = REV\_PDCH\_SUPPORTED_r$).

If $REV\_PDCH\_PARMS\_INCL_r$ is not included, or if it is included and equal to '0', the mobile station shall set $REV\_PDCH\_PARMS\_INCL_s$ to '0'; otherwise, the mobile station

shall set $REV\_PDCH\_PARMS\_INCL_s$ to '1' and perform the following:

- If $REV\_PDCH\_RLGAIN\_INCL_r$ is equal to '1', the mobile station shall set:
  - ($RLGAIN\_SPICH\_PILOT_s = RLGAIN\_SPICH\_PILOT_r$).
  - ($RLGAIN\_REQCH\_PILOT_s = RLGAIN\_REQCH\_PILOT_r$).
  - ($RLGAIN\_PDCCH\_PILOT_s = RLGAIN\_PDCCH\_PILOT_r$).
- If $REV\_PDCH\_PARMS\_1\_INCL_r$ is equal to '1', the mobile station shall set:
  - ($REV\_PDCH\_TABLE\_SEL_s = REV\_PDCH\_TABLE\_SEL_r$).
  - ($REV\_PDCH\_MAX\_AUTO\_TPR_s$ to $REV\_PDCH\_MAX\_AUTO\_TPR_r$).
  - ($REV\_PDCH\_NUM\_ARQ\_ROUNDS\_NORMAL_s = REV\_PDCH\_NUM\_ARQ\_ROUNDS\_NORMAL_r+1$).
- If $REV\_PDCH\_OPER\_PARMS\_INCL_r$ is equal to '1', the mobile station shall set:
  - ($REV\_PDCH\_MAX\_SIZE\_ALLOWED\_ENCODER\_PACKET_s = REV\_PDCH\_MAX\_SIZE\_ALLOWED\_ENCODER\_PACKET_r+1$).
  - ($REV\_PDCH\_DEFAULT\_PERSISTENCE_s = REV\_PDCH\_DEFAULT\_PERSISTENCE_r$).
  - ($REV\_PDCH\_RESET\_PERSISTENCE_s = REV\_PDCH\_RESET\_PERSISTENCE_r$).
  - ($REV\_PDCH\_GRANT\_PRECEDENCE_s = REV\_PDCH\_GRANT\_PRECEDENCE_r$).
  - ($REV\_PDCH\_MSIB\_SUPPORTED_s = REV\_PDCH\_MSIB\_SUPPORTED_r$).
  - ($REV\_PDCH\_SOFT\_SWITCHING\_RESET\_IND_s = REV\_PDCH\_SOFT\_SWITCHING\_RESET\_IND_r$).

The mobile station shall store the following:

- If $BYPASS\_REG\_IND_r$ is included, the mobile station shall set $BYPASS\_REG\_IND_s$ to $BYPASS\_REG\_IND_r$; otherwise, the mobile station shall set $BYPASS\_REG\_IND_s$ to '00'.
- *Call Recovery Request Message* supported indicator ($CRRM\_MSG\_IND_s = CRRM\_MSG\_IND_r$).
- Base station horizontal location uncertainty ($LOC\_UNC\_H_s = LOC\_UNC\_H_r$)
- Base station height ($HEIGHT_s = HEIGHT_r$)
- Base station verticl location uncertainty ($LOC\_UNC\_V_s = LOC\_UNC\_V_r$)

The mobile station shall ignore any fields at the end of the *MC-RR Parameters Message* that are not defined according to the protocol revision level ($MOB\_P\_REV_p$ of the current band class) being used by the mobile station.

2.6.2.2.14.2 Slot Cycle Index

The mobile station shall set $SLOT\_CYCLE\_INDEX_s$ to:

$$\max\begin{pmatrix} \text{MIN\_SLOT\_CYCLE\_INDEX}_S, \\ \min(\text{SLOT\_CYCLE\_INDEX\_REG}, \text{MAX\_SLOT\_CYCLE\_INDEX}_S) \end{pmatrix}.$$

Where, SLOT_CYCLE_INDEX_REG is computed based on the slot cycle index value included in the last registration attempt (see 2.6.5.5.3.1 and 2.6.5.5.3.2).

If the mobile station is operating in the slotted mode, it shall set its slot cycle length as described in 2.6.2.1.1.3.

2.6.2.2.14.3 Forward Common Control Channel Assignment Change

If the number of Forward Common Control Channels specified in the *MC-RR Parameters Message* (NUM_FCCCH_r) is not equal to '0' and is different from NUM_FCCCH_s, the mobile station shall use the hash algorithm specified in 2.6.7.1 to select a new Forward Common Control Channel number in the range 1 to NUM_FCCCH_r and shall store this value as FCCCH_ID_s. If NUM_FCCCH_r is not equal to '0', the mobile station shall store the FCCCH rate (FCCCH_RATE_s = FCCCH_RATE_r), the FCCCH code rate (FCCCH_CODE_RATE_s = FCCCH_CODE_RATE_r), and store FCCCH_CODE_CHAN_r of the corresponding Forward Common Control Channel as FCCCH_CODE_CHAN_s. The mobile station shall then set NUM_FCCCH_s to NUM_FCCCH_r.

The mobile station shall set ACC_MSG_SEQ_s to NULL.

2.6.2.2.14.4 RESCAN Parameter

If the RESCAN_r field in the *MC-RR Parameters Message* equals '1', the mobile station shall enter the *System Determination Substate* of the *Mobile Station Initialization State* with a rescan indication (see 2.6.1.1).

2.6.2.2.15 Enhanced Access Parameters Message

Whenever an *Enhanced Access Parameters Message* is received on the f-csch, the sequence number, ACC_MSG_SEQ_r, shall be compared to ACC_MSG_SEQ_s. If the comparison results in a match, the mobile station may ignore the message. If the comparison results in a mismatch, then the mobile station shall process the remaining fields in the message as follows:

If MAX_REQ_SEQ or MAX_RSP_SEQ are not within the valid ranges specified in 3.7.2.3.2.2, then the mobile station shall ignore the *Enhanced Access Parameters Message* that contains them.

The mobile station shall store the following parameters:

- *Enhanced Access Parameters Message* sequence number (ACC_MSG_SEQ_s = ACC_MSG_SEQ_r)
- Persistence related parameters:
  - If PSIST_PARMS_INCL is equal to '1', store the following:
    - Persistence parameter number according to the following rule: If the mobile station's access overload class is in the range 0-9 inclusive, set PSIST_s equal to PSIST(0-9)_EACH_r; otherwise set PSIST_s equal to PSIST(n)_EACH_r,

where n is equal to the mobile station access overload class.

+ Persistence modifier for Enhanced Access Channel attempts for registrations which are not responses to the *Registration Request Order* (REG_PSIST_s = $REG\_PSIST\_EACH_r$).

+ Persistence modifier for Enhanced Access Channel attempts for message transmissions (MSG_PSIST_s = $MSG\_PSIST\_EACH_r$).

+ Persistence modifier for emergency calls by the mobile stations in access overload classes 0 to 9($PSIST\_EMG_s$ = $PSIST\_EMG_r$).

– If $PSIST\_PARMS\_INCL_r$ is equal to '0', store the following:

+ Set $PSIST_s$ to 0.

+ Persistence modifier for emergency calls by a mobile station in access overload classes 0 to 9 ($PSIST\_EMG_s$ = '000').

+ Persistence modifier for Enhanced Access Channel attempts for message transmissions (MSG_PSIST_s = '000').

+ Persistence modifier for Enhanced Access Channel attempts for registrations which are not responses to the *Registration Request Order* (REG_PSIST_s = '000').

• The mobile station shall store the Access Control based on Call Type (ACCT) information as follows:

– Set ACCT_SO_LIST to NULL.

– Set ACCT_SO_GRP_LIST to NULL.

– If $ACCT\_INCL_r$ is equal to '1' and $ACCOLC_p$ is in the range 0 to 9, then the mobile station shall perform the following:

+ Set $ACCT\_INCL\_EMG_s$ to $ACCT\_INCL\_EMG_r$.

+ If $ACCT\_SO\_INCL_r$ is equal to '1', then for each $ACCT\_SO_r$ included in this message:

o If $ACCT\_AOC\_BITMAP\_INCL_r$ is equal to '0', or if $ACCT\_AOC\_BITMAP\_INCL_r$ is equal to '1' and the bit in the associated $ACCT\_AOC\_BITMAP1_r$ corresponding to the mobile station's $ACCOLC_p$ (see Table 3.7.2.3.2.2-1) is equal to '1', then add $ACCT\_SO_r$ to ACCT_SO_LIST.

+ If $ACCT\_SO\_GRP\_INCL_r$ is equal to '1', then for each $ACCT\_SO\_GRP_r$ included in this message:

o If $ACCT\_AOC\_BITMAP\_INCL_r$ is equal to '0', or if $ACCT\_AOC\_BITMAP\_INCL_r$ is equal to '1' and the bit in the associated $ACCT\_AOC\_BITMAP2_r$ corresponding to the mobile station's $ACCOLC_p$ (see Table 3.7.2.3.2.2-1) is equal to '1', then add $ACCT\_SO\_GRP_r$ to ACCT_SO_GRP_LIST.

- Link Access Control related parameters:
  - Acknowledgment timeout ($EACH\_ACC\_TMO_s = ACC\_TMO_r$)
  - Maximum number of probe sequences for an Enhanced Access Channel request ($MAX\_REQ\_SEQ_s = MAX\_REQ\_SEQ_r$)
  - Maximum number of probe sequences for an Enhanced Access Channel response ($MAX\_RSP\_SEQ_s = MAX\_RSP\_SEQ_r$)
- Mode Selection Table:

  $NUM\_MODE\_SELECTION\_ENTRIES_s = (NUM\_MODE\_SELECTION\_ENTRIES_r + 1)$

  For i = 1 to $NUM\_MODE\_SELECTION\_ENTRIES_s$:
  - $MODE\_SELECTION_s[i].ACCESS\_MODE$ = ACCESS_MODE field of the ith occurrence of the record
  - $MODE\_SELECTION_s[i].MIN\_DURATION$ = ACCESS_MODE_MIN_DURATION field of the ith occurrence of the record
  - $MODE\_SELECTION_s[i].MAX\_DURATION$ = ACCESS_MODE_MAX_DURATION field of the ith occurrence of the record
- Reverse gain adjustment of the Enhanced Access Channel or Reverse Common Control Channel relative to the Reverse Pilot Channel ($RLGAIN\_COMMON\_PILOT_s = RLGAIN\_COMMON\_PILOT_r$)
- The threshold level at which the interference correction begins to be applied ($IC\_THRESH_s = - IC\_THRESH_r$)
- The maximum interference correction that can be applied ($IC\_MAX_s = IC\_MAX_r$)
- Mode-specific parameters for the Enhanced Access Channel:

  For i = 1 to NUM_MODE_PARM_REC + 1:

  For j = 0 to 7:

  If the $(j+1)^{th}$ subfield of APPLICABLE_MODES is equal to ‘1’, store the following parameters:
  - Nominal transmit power offset on the Enhanced Access Channel ($MODE\_PARMS_s[j].EACH\_NOM\_PWR$ = EACH_NOM_PWR field of the ith occurrence of the record)
  - Initial power offset for access on the Enhanced Access Channel ($MODE\_PARMS_s[j].EACH\_INIT\_PWR$ = EACH_INIT_PWR field of the ith occurrence of the record)
  - Power increment on the Enhanced Access Channel ($MODE\_PARMS_s[j].EACH\_PWR\_STEP$ = EACH_PWR_STEP field of the ith occurrence of the record)
  - Number of access probes on the Enhanced Access Channel ($MODE\_PARMS_s[j].EACH\_NUM\_STEP$ = EACH_NUM_STEP field of the ith

occurrence of the record)

- Preamble enabled indicator on the Enhanced Access Channel (MODE_PARMS$_s$[j].EACH_PREAMBLE_ENABLED = EACH_PREAMBLE_ENABLED field of the ith occurrence of the record)
- Number of preamble fractions sent on the Enhanced Access Channel if MODE_PARMS$_s$[j].EACH_PREAMBLE_ENABLED is equal to '1' (MODE_PARMS$_s$[j].EACH_PREAMBLE_NUM_FRAC = EACH_PREAMBLE_NUM_FRAC field of the ith occurrence of the record)
- Fractional preamble duration on the Enhanced Access Channel if MODE_PARMS$_s$[j].EACH_PREAMBLE_ENABLED is equal to '1' (MODE_PARMS$_s$[j].EACH_PREAMBLE_FRAC_DURATION = EACH_PREAMBLE_FRAC_DURATION field of the ith occurrence of the record)
- Preamble gated-off duration on the Enhanced Access Channel if MODE_PARMS$_s$[j].EACH_PREAMBLE_ENABLED is equal to '1' (MODE_PARMS$_s$[j].EACH_PREAMBLE_OFF_DURATION = EACH_PREAMBLE_OFF_DURATION field of the ith occurrence of the record)
- Additional preamble duration on the Enhanced Access Channel if MODE_PARMS$_s$[j].EACH_PREAMBLE_ENABLED is equal to '1' (MODE_PARMS$_s$[j].EACH_PREAMBLE_ADD_DURATION = EACH_PREAMBLE_ADD_DURATION field of the ith occurrence of the record)
- Enhanced Access Channel probe backoff range (MODE_PARMS$_s$[j].EACH_PROBE_BKOFF = EACH_PROBE_BKOFF field of the ith occurrence of the record)
- Enhanced Access Channel probe sequence backoff range (MODE_PARMS$_s$[j].EACH_BKOFF = EACH_BKOFF field of the ith occurrence of the record)
- Enhanced Access Channel slot (MODE_PARMS$_s$[j].EACH_SLOT = 1 + EACH_SLOT field of the ith occurrence of the record)
- Enhanced Access Channel first slot offset (MODE_PARMS$_s$[j].EACH_SLOT_OFFSET1 = EACH_SLOT_OFFSET1 field of the ith occurrence of the record)
- Enhanced Access Channel second slot offset (MODE_PARMS$_s$[j].EACH_SLOT_OFFSET2 = EACH_SLOT_OFFSET2 field of the ith occurrence of the record)

• Additional parameters for the Basic Access Mode:

If BA_PARMS_LEN$_r$ is equal to '000', set the Basic Access Mode supported indicator, BA_SUPPORTED$_s$, to '0'; otherwise store the following parameters:

- Basic Access Mode supported indicator (BA_SUPPORTED$_s$ = '1')
- Number of Enhanced Access Channels (NUM_EACH_BA$_s$ = (NUM_EACH_BA$_r$ +

1))

– Rate words supported on the Enhanced Access Channels ($EACH\_BA\_RATES\_SUPPORTED_s$ = $EACH\_BA\_RATES\_SUPPORTED_r$)

- Additional parameters for the Reservation Access Mode:

If $RA\_PARMS\_LEN_r$ is equal to '00000', set the Reservation Access Mode supported indicator, $RA\_SUPPORTED_s$, to '0'; otherwise store the following parameters, if included in the message:

– Reservation Access Mode supported indicator ($RA\_SUPPORTED_s$ = '1')

– Number of Enhanced Access Channels ($NUM\_EACH\_RA_s$ = ($NUM\_EACH\_RA_r$ + 1))

– Number of Common Assignment Channels (NUM_CACH_s = (NUM_CACH_r + 1))

– Code rate of Common Assignment Channels ($CACH\_CODE\_RATE_s$ = $CACH\_CODE\_RATE_r$)

– For i = 0 to NUM_CACH_s - 1, store the channel code index for each Common Assignment Channel ($CACH\_CODE\_CHAN_s[i]$ = $CACH\_CODE\_CHAN_r$.

– Number of Reverse Common Control Channels (NUM_RCCCH_s = (NUM_RCCCH_r + 1))

– Rate words supported on the Reverse Common Control Channels ($RCCCH\_RATES\_SUPPORTED_s$ = $RCCCH\_RATES\_SUPPORTED_r$)

– Preamble enabled indicator on the Reverse Common Control Channels ($RCCCH\_PREAMBLE\_ENABLED_s$ = $RCCCH\_PREAMBLE\_ENABLED_r$)

– Number of preamble fractions sent on the Reverse Common Control Channel if $RCCCH\_PREAMBLE\_ENABLED_r$ is equal to '1' ($RCCCH\_PREAMBLE\_NUM\_FRAC_s$ = $RCCCH\_PREAMBLE\_NUM\_FRAC_r$)

– Fractional preamble duration on the Reverse Common Control Channel if $RCCCH\_PREAMBLE\_ENABLED_r$ is equal to '1' ($RCCCH\_PREAMBLE\_FRAC\_DURATION_s$ = $RCCCH\_PREAMBLE\_FRAC\_DURATION_r$)

– Preamble gated-off duration on the Reverse Common Control Channel if $RCCCH\_PREAMBLE\_ENABLED_r$ is equal to '1' ($RCCCH\_PREAMBLE\_OFF\_DURATION_s$ = $RCCCH\_PREAMBLE\_OFF\_DURATION_r$)

– Additional preamble duration on the Reverse Common Control Channel if $RCCCH\_PREAMBLE\_ENABLED_r$ is equal to '1' ($RCCCH\_PREAMBLE\_ADD\_DURATION_s$ = $RCCCH\_PREAMBLE\_ADD\_DURATION_r$)

– Slot duration on the Reverse Common Control Channel ($RCCCH\_SLOT_s$ = 1 + $RCCCH\_SLOT_r$)

– First slot offset of the Reverse Common Control Channel

(RCCCH_SLOT_OFFSET1$_s$ = RCCCH_SLOT_OFFSET1$_r$)

– Second slot offset of the Reverse Common Control Channel (RCCCH_SLOT_OFFSET2$_s$ = RCCCH_SLOT_OFFSET2$_r$)

– Nominal transmit power offset on the Reverse Common Control Channel (RCCCH_NOM_PWR$_s$ = RCCCH_NOM_PWR$_r$)

– Initial power offset for access on the Reverse Common Control Channel (RCCCH_INIT_PWR$_s$ = RCCCH_INIT_PWR$_r$)

– Power Control delay for the Reservation Access Mode (RA_PC_DELAY$_s$ = RA_PC_DELAY$_r$)

– Maximum delay to receive the *Early Acknowledgment Channel Assignment Message* on the Common Assignment Channel (EACAM_CACH_DELAY$_s$ = EACAM_CACH_DELAY$_r$)

– Indicator for handoff supported on the Reverse Common Control Channels (RCCCH_HO_SUPPORTED$_s$ = RCCCH_HO_SUPPORTED$_r$)

– Threshold for handoff on the Reverse Common Control Channels if RCCCH_HO_SUPPORTED$_r$ is equal to ‘1’ (RCCCH_HO_THRESH$_s$ = RCCCH_HO_THRESH$_r$)

– Maximum delay to receive the *Early Acknowledgment Channel Assignment Message* and the *Power Control Channel Assignment Message* if RCCCH_HO_SUPPORTED$_r$ is equal to ‘1’ (EACAM_PCCAM_DELAY$_s$ = EACAM_PCCAM_DELAY$_r$)

– Number of Common Power Control Channels (NUM_CPCCH$_s$ = (NUM_CPCCH$_r$ + 1))

– Power control rate for the Common Power Control Channels (CPCCH_RATE$_s$ = CPCCH_RATE$_r$)

– For i = 0 to NUM_CPCCH$_s$ - 1, store the channel code index for each Common Power Control Channel (CPCCH_CODE_CHAN$_s$[i] = CPCCH_CODE_CHAN$_r$.

– Number of Power Control Subchannels for the Reservation Access Mode (NUM_PCSCH_RA$_s$ = (NUM_PCSCH_RA$_r$ + 1))

The mobile station shall set CURR_ACC_MSG_SEQ equal to ACC_MSG_SEQ$_s$.

2.6.2.2.16 ANSI-41 RAND Message

Whenever an *ANSI-41 RAND Message* is received, the mobile station shall process the fields in the message as follows.

The mobile station shall store the following parameters:

- Random challenge value (RAND$_s$ = RAND$_r$)
- Current *Enhanced Access Parameters Message* Sequence Number (CURR_ACC_MSG_SEQ = ACC_MSG_SEQ$_r$).

- Pilot PN sequence offset increment ($PILOT\_PN_s = PILOT\_PN_r$)

The mobile station shall also compare the *Enhanced Access Parameters Message* sequence number, $ACC\_MSG\_SEQ_r$, with that stored in $ACC\_MSG\_SEQ_s$. If the comparison results in a mismatch, then the mobile station shall set $ACC\_MSG\_SEQ_s$ to NULL (see 2.6.2.2).

The mobile station shall ignore any fields at the end of the *ANSI-41 RAND Message* which are not defined according to the protocol revision level ($MOB\_P\_REV_p$ of the current band class) being used by the mobile station.

2.6.2.2.17 Universal Neighbor List Message

Whenever a valid *Universal Neighbor List Message* is received on the Primary Broadcast Control Channel, the configuration message sequence number, $CONFIG\_MSG\_SEQ_r$ shall be compared to that stored in $UNIV\_NGHBR\_LST\_MSG\_SEQ_s$. If the comparison results in a mismatch, then the mobile station shall process the remaining fields in the message as described below.

The mobile station shall store the following parameters:

- Configuration message sequence number
  ($CONFIG\_MSG\_SEQ_s = CONFIG\_MSG\_SEQ_r$,
  $UNIV\_NGHBR\_LST\_MSG\_SEQ_s = CONFIG\_MSG\_SEQ_r$).

If $RADIO\_INTERFACE\_TYPE_r$ is equal to '0000' but the PILOT_INC field is not within the valid range specified in 3.7.2.3.2.33, then the mobile station shall ignore the entire record that contains it.

If $RADIO\_INTERFACE\_TYPE_r$ is equal to '0000' and the PILOT_INC field is within the valid range specified in 3.7.2.3.2.33, the mobile station shall perform the following:

The mobile station shall store the Pilot PN sequence offset increment ($PILOT\_INC_s = PILOT\_INC_r$).

The mobile station shall set $NGHBR\_SET\_SIZE_s$ to NUM_NGHBR_r.

For each of the neighboring base stations contained in the *Universal Neighbor List Message*, if $FREQ\_INCL_r$ is equal to '0', or if $FREQ\_INCL_r$ is equal to '1' and $NGHBR\_BAND_r$ is supported, the mobile station shall perform the following:

- If the ith occurrence of $NGHBR\_CONFIG_r$ is equal to '000', '001', '010', or '100', set the NGHBR_CONFIG field of NGHBR_REC[i] to the ith occurrence of $NGHBR\_CONFIG_r$; otherwise, set the NGHBR_CONFIG field of NGHBR_REC[i] to '011'.
- Set the NGHBR_PN field of NGHBR_REC[i] to the ith occurrence of $NGHBR\_PN_r$.
- If $NGHBR\_CONFIG_r$ is equal to '011', set the BCCH_SUPPORT field of NGHBR_REC[i] to $BCCH\_SUPPORT_r$ of the corresponding record.
- Set the ADD_PILOT_REC_INCL field of NGHBR_REC[i] to the ith occurrence of $ADD\_PILOT\_REC\_INCL_r$. If $ADD\_PILOT\_REC\_INCL_r$ equals '1', for each pilot included in the message, the mobile station shall also perform the following:

- Set the NGHBR_PILOT_REC_TYPE field of NGHBR_PILOT_REC to $NGHBR\_PILOT\_REC\_TYPE_r$.
- If $NGHBR\_PILOT\_REC\_TYPE_r$ is equal to '000'. The mobile station shall:
  - Set the TD_POWER_LEVEL field of NGHBR_PILOT_REC to $TD\_POWER\_LEVEL_r$.
  - Set the TD_MODE field of NGHBR_PILOT_REC to TD_MODE_r.
- If $NGHBR\_PILOT\_REC\_TYPE_r$ is equal to '001', the mobile station shall:
  - Set the AUX_PILOT_QOF field of NGHBR_PILOT_REC to QOF_r.
  - Set the AUX_PILOT_WALSH_CODE field of NGHBR_PILOT_REC to $AUX\_PILOT\_WALSH_r$ with the Walsh Code length specified by $WALSH\_LENGTH_r$.
- If $NGHBR\_PILOT\_REC\_TYPE_r$ is equal to '010', the mobile station shall:
  - Set the AUX_PILOT_QOF field of NGHBR_PILOT_REC to QOF_r.
  - Set the AUX_PILOT_WALSH_CODE field of NGHBR_PILOT_REC to AUX_WALSH_r with the Walsh Code length specified by $WALSH\_LENGTH_r$.
  - Set the AUX_TD_POWER_LEVEL field of NGHBR_PILOT_REC to $AUX\_TD\_POWER\_LEVEL_r$.
  - Set the TD_MODE field of NGHBR_PILOT_REC to TD_MODE_r.
- If $NGHBR\_PILOT\_REC\_TYPE_r$ is equal to '011', the mobile station shall:
  - Set the SR3_PRIMARY_PILOT field of NGHBR_PILOT_REC to $SR3\_PRIMARY\_PILOT_r$.
  - Set the SR3_PILOT_POWER1 field of NGHBR_PILOT_REC to $SR3\_PILOT\_POWER1_r$.
  - Set the SR3_PILOT_POWER2 field of NGHBR_PILOT_REC to $SR3\_PILOT\_POWER2_r$.
- If $NGHBR\_PILOT\_REC\_TYPE_r$ is equal to '100', the mobile station shall:
  - Set the SR3_PRIMARY_PILOT field of NGHBR_PILOT_REC to $SR3\_PRIMARY\_PILOT_r$.
  - Set the SR3_PILOT_POWER1 field of NGHBR_PILOT_REC to $SR3\_PILOT\_POWER1_r$.
  - Set the SR3_PILOT_POWER2 field of NGHBR_PILOT_REC to $SR3\_PILOT\_POWER2_r$.
  - Set the AUX_PILOT_QOF field of NGHBR_PILOT_REC to QOF_r.
  - Set the AUX_PILOT_WALSH_CODE field of NGHBR_PILOT_REC to $AUX\_PILOT\_WALSH_r$ with the Walsh Code length specified by $WALSH\_LENGTH_r$.

+ If $ADD\_INFO\_INCL1_r$ is equal to '1', set the AUX_PILOT_QOF1 field of NGHBR_PILOT_REC to $QOF1_r$ and set the AUX_PILOT_WALSH_CODE1 field of NGHBR_PILOT_REC to $AUX\_PILOT\_WALSH1_r$ with the Walsh Code length specified by $WALSH\_LENGTH1_r$; otherwise, set the AUX_PILOT_QOF1 field of NGHBR_PILOT_REC to QOF_r and set the AUX_PILOT_WALSH_CODE1 field of NGHBR_PILOT_REC to $AUX\_PILOT\_WALSH_r$ with the Walsh Code length specified by $WALSH\_LENGTH_r$.

+ If $ADD\_INFO\_INCL2_r$ is equal to '1', set the AUX_PILOT_QOF2 field of NGHBR_PILOT_REC to $QOF2_r$ and set the AUX_PILOT_WALSH_CODE2 field of NGHBR_PILOT_REC to $AUX\_PILOT\_WALSH2_r$ with the Walsh Code length specified by $WALSH\_LENGTH2_r$; otherwise, set the AUX_PILOT_QOF2 field of NGHBR_PILOT_REC to QOF_r and set the AUX_PILOT_WALSH_CODE2 field of NGHBR_PILOT_REC to $AUX\_PILOT\_WALSH_r$ with the Walsh Code length specified by $WALSH\_LENGTH_r$.

- If $NGHBR\_SRCH\_MODE_r$ = '00' or '10', set the SEARCH_PRIORITY field of each NGHBR_REC to '10' (high) for all $NGHBR\_SET\_SIZE_s$ entries.
- If $NGHBR\_SRCH\_MODE_r$ = '01' or '11', set the SEARCH_PRIORITY field of NGHBR_REC[i] to the ith occurrence of $SEARCH\_PRIORITY_r$.
- If $NGHBR\_SRCH\_MODE_r$ = '00' or '01', set the SRCH_WIN_NGHBR field of each NGHBR_REC to $SRCH\_WIN\_N_r$ for all $NGHBR\_SET\_SIZE_s$ entries.
- If $NGHBR\_SRCH\_MODE_r$ = '00' or '01', set the SRCH_OFFSET_NGHBR field of each NGHBR_REC to '000'.
- If $NGHBR\_SRCH\_MODE_r$ = '10' or '11':
  - set the SRCH_WIN_NGHBR field of NGHBR_REC[i] to the ith occurrence of $SRCH\_WIN\_NGHBR_r$
  - if $SRCH\_OFFSET\_INCL_r$ equals '1', set the SRCH_OFFSET_NGHBR field of NGHBR_REC[i] to the ith occurrence of $SRCH\_OFFSET\_NGHBR_r$, and
  - if $SRCH\_OFFSET\_INCL_r$ equals '0', set the SRCH_OFFSET_NGHBR field of each NGHBR_REC to '000'.
- If USE_TIMING_r is equal to '1', set the TIMING_INCL field of NGHBR_REC[i] to the ith occurrence of $TIMING\_INCL_r$; otherwise, set the TIMING_INCL field of NGHBR_REC to '0' for all entries.
- Set the NGHBR_PDCH_SUPPORTED field of NGHBR_REC[i] to the ith occurrence of $NGHBR\_PDCH\_SUPPORTED_r$ if included; otherwise, set the NGHBR_PDCH_SUPPORTED field of NGHBR_REC to '0' for all entries.
- The mobile station shall set $RESQ\_ENABLED_s = RESQ\_ENABLED_r$. If $RESQ\_ENABLED_s$ is equal to '1', then the mobile station shall store:
  - Call rescue delay timer value ($RESQ\_DELAY\_TIME_s = RESQ\_DELAY\_TIME_r$)

- Call rescue allowed timer value ($RESQ\_ALLOWED\_TIME_s$ = $RESQ\_ALLOWED\_TIME_r$)
- Call rescue attempt timer value ($RESQ\_ATTEMPT\_TIME_s$ = $RESQ\_ATTEMPT\_TIME_r$)
- Code channel index for call rescue ($RESQ\_CODE\_CHAN_s$ = $RESQ\_CODE\_CHAN_r$)
- Quasi-Orthogonal Function mask identifier for call rescue ($RESQ\_QOF_s$ = $RESQ\_QOF_r$)
- Minimum time between consecutive rescues ($RESQ\_MIN\_PERIOD_s$ = $RESQ\_MIN\_PERIOD_r$ + 1) if $RESQ\_MIN\_PERIOD\_INCL_r$ is equal to '1'; otherwise, $RESQ\_MIN\_PERIOD_s$ = '00000'.
- The required number of transmissions of a regular PDU before declaring L2 Acknowledgment Failure when Call Rescue is enabled ($RESQ\_NUM\_TOT\_TRANS\_20MS_s$ = $RESQ\_NUM\_TOT\_TRANS\_20MS_r$) if included; otherwise, set $RESQ\_NUM\_TOT\_TRANS\_20MS_s$ to N_{1m}.
- The required number of transmissions of a mini PDU before declaring L2 Acknowledgment Failure when Call Rescue is enabled ($RESQ\_NUM\_TOT\_TRANS\_5MS_s$ = $RESQ\_NUM\_TOT\_TRANS\_5MS_r$) if included; otherwise, set $RESQ\_NUM\_TOT\_TRANS\_5MS_s$ to N_{15m}.
- The Traffic Channel preamble length for Call Rescue Soft Handoff when operating in Radio Configuration 1 or 2 ($RESQ\_NUM\_PREAMBLE\_RC1\_RC2_s$ = $RESQ\_NUM\_PREAMBLE\_RC1\_RC2_r$).
- The Traffic Channel preamble length for Call Rescue Soft Handoff when operating in Radio Configuration greater than 2 ($RESQ\_NUM\_PREAMBLE_s$ = $RESQ\_NUM\_PREAMBLE_r$).
- The power level adjustment to be applied to the last closed-loop power level when re-enabling the transmitter for call rescue soft handoff ($RESQ\_POWER\_DELTA_s$ = $RESQ\_POWER\_DELTA_r$).
- Set the NGHBR_RESQ_CONFIGURED field of NGHBR_REC[i] to the ith occurrence of $NGHBR\_RESQ\_CONFIGURED_r$.

For each of the neighboring base stations contained in the *Universal Neighbor List Message*, if $FREQ\_FIELDS\_INCL_r$ equals '1', $FREQ\_INCL_r$ equals '1', and $NGHBR\_BAND_r$ is supported, the mobile station shall also perform the following:

- Set the NGHBR_BAND field of NGHBR_REC[i] to the ith occurrence of $NGHBR\_BAND_r$.
- Set the NGHBR_FREQ field of NGHBR_REC[i] to the ith occurrence of $NGHBR\_FREQ_r$.

For each of the neighboring base stations contained in the *Universal Neighbor List Message*, if USE_TIMING_r is equal to '1' and $TIMING\_INCL_r$ equals '1', the mobile station shall also perform the following:

- Set the NGHBR_TX_OFFSET field of NGHBR_REC[i] to the ith occurrence of $NGHBR\_TX\_OFFSET_r$.
- If $GLOBAL\_TIMING\_INCL_r$ is equal to '1', then the mobile station shall:
  - Set the NGHBR_TX_DURATION field of NGHBR_REC to $GLOBAL\_TX\_DURATION_r$ for all entries.
  - Set the NGHBR_TX_PERIOD field of NGHBR_REC to $GLOBAL\_TX\_PERIOD_r$ for all entries.
- If $GLOBAL\_TIMING\_INCL_r$ is equal to '0', then the mobile station shall:
  - Set the NGHBR_TX_DURATION field of NGHBR_REC[i] to the ith occurrence of $NGHBR\_TX\_DURATION_r$.
  - Set the NGHBR_TX_PERIOD field of NGHBR_REC[i] to the ith occurrence of $NGHBR\_TX\_PERIOD_r$.

For each of the neighboring base stations contained in the *Universal Neighbor List Message*, if $FREQ\_FIELDS\_INCL_r$ equals '1' and $FREQ\_INCL_r$ equals '0', the mobile station shall also perform the following:

- Set the NGHBR_BAND field of NGHBR_REC[i] to $CDMABAND_s$.
- If $NGHBR\_CONFIG_r$ equals '010', set the NGHBR_FREQ field of NGHBR_REC[i] to the first CDMA Channel listed in the *CDMA Channel List Message or Extended CDMA Channel List Message* transmitted by the current base station; otherwise, set the NGHBR_FREQ field of NGHBR_REC[i] to $CDMACH_s$.

If $NGHBR\_SET\_ENTRY\_INFO_r$ is equal to '0', then for all $NGHBR\_SET\_SIZE_s$ occurrences of ACCESS_ENTRY_HO, the mobile station shall set the ACCESS_ENTRY_HO field of NGHBR_REC[i] to '0'.

If $NGHBR\_SET\_ENTRY\_INFO_r$ is equal to '1', then for all $NGHBR\_SET\_SIZE_s$ occurrences of ACCESS_ENTRY_HO, the mobile station shall set the ACCESS_ENTRY_HO field of NGHBR_REC[i] to the ith occurrence of $ACCESS\_ENTRY\_HO_r$.

If $NGHBR\_SET\_ACCESS\_INFO_r$ is equal to '0', then for all $NGHBR\_SET\_SIZE_s$ occurrences of ACCESS_HO_ALLOWED, the mobile station shall set the ACCESS_HO_ALLOWED field of NGHBR_REC[i] to '0'.

If $NGHBR\_SET\_ACCESS\_INFO_r$ is equal to '1', then for all $NGHBR\_SET\_SIZE_s$ occurrences of ACCESS_HO_ALLOWED, the mobile station shall set the ACCESS_HO_ALLOWED field of NGHBR_REC[i] to the ith occurrence of $ACCESS\_HO\_ALLOWED_r$.

The mobile station shall update the idle handoff Neighbor Set (see 2.6.2.1.4) so that it consists only of pilot offsets listed in the *Universal Neighbor List Message*. If the *Universal Neighbor List Message* contains more pilot offsets than the mobile station can store, the mobile station shall store the pilot offsets beginning at the start of the *Universal Neighbor List Message*, up to the limits of the mobile station's Neighbor Set storage capacity.

If $RADIO\_INTERFACE\_TYPE_r$ is equal to '0001', the mobile station shall process the fields contained in the record as follows:

If $RADIO\_INTERFACE\_TYPE_r$ is equal to '0010', the mobile station shall process the fields contained in the record as follows:

The mobile station shall set $NUM\_HRPD\_NGHBR_s$ to $NUM\_HRPD\_NGHBR_r$, the number of neighboring HRPD systems contained in the *Universal Neighbor List Message*. For each of the neighboring HRPD systems contained in the *Universal Neighbor List Message*, the mobile station shall perform the following:

- Set the PN field of HRPD_NGHBR_LIST[i] to the ith occurrence of $NGHBR\_PN_r$.
- Set the BAND_CLASS field of HRPD_NGHBR_LIST[i] to the ith occurrence of $NGHBR\_BAND_r$ if $NGHBR\_FREQ\_INCL_r$ equals '1'; otherwise, set the BAND_CLASS field of HRPD_NGHBR_LIST[i] to $CDMABAND_s$.
- Set the CDMA_FREQ field of HRPD_NGHBR_LIST[i] to the ith occurrence of $NGHBR\_FREQ_r$ if $NGHBR\_FREQ\_INCL_r$ equals '1'; otherwise, set the BAND_CLASS field of HRPD_NGHBR_LIST[i] to $CDMACH_s$.
- Set the PN_ASSOCIATION field of HRPD_NGHBR_LIST[i] to the ith occurrence of $PN\_ASSOCIATION\_IND_r$.
- Set the DATA_ASSOCIATION field of HRPD_NGHBR_LIST[i] to the ith occurrence of $DATA\_ASSOCIATION\_IND_r$.

2.6.2.2.18 *BCMC Service Parameters Message*

The mobile station may receive the *BCMC Service Parameters Message* on the Paging Channel or on the Primary Broadcast Control Channel.

When the mobile station desires to receive the *BCMC Service Parameters Message* on the Paging Channel, the mobile station shall monitor the F-PCH for the duration of four F-PCH slots from the first slot of a BSPM slot cycle (see 2.6.2.1.1.3.8.1) for the start of the *BCMC Service Parameters Message* transmission or until the *BCMC Service Parameters Message* with $DIFF\_BSPM_r$ equal to '0' is received; if the mobile station detects the start of the *BCMC Service Parameters Message*, the mobile station shall monitor the F-PCH until the entire *BCMC Service Parameters Message* is received.

When the mobile station desires to receive the *BCMC Service Parameters Message* on the Primary Broadcast Control Channel, the mobile station shall monitor the F-BCCH for the duration of four F-BCCH slots from the first slot of a BSPM slot cycle (see 2.6.2.1.1.3.8.2) for the start of the *BCMC Service Parameters Message* transmission or until the *BCMC Service Parameters Message* with $DIFF\_BSPM_r$ equal to '0' is received; if the mobile station detects the start of the *BCMC Service Parameters Message*, the mobile station shall monitor the F-BCCH until the entire *BCMC Service Parameters Message* is received.

Whenever the *BCMC Service Parameters Message* is received, the mobile station shall compare the BSPM sequence number, $BSPM\_MSG\_SEQ_r$, to that stored in $BSPM\_MSG\_SEQ_s$. If the comparison results in a match and FULL_BSPM_IND = '1', the mobile station may ignore the message. If the comparison results in a mismatch, the mobile station shall process the remaining fields in the message as follows:

The mobile station shall perform the following:

- If $DIFF\_BSPM_r$ equals '0', the mobile station shall perform the following:
  - The mobile station shall delete the currently stored *BCMC Service Parameters Message* parameters and shall store the parameters received in this *BCMC Service Parameters Message* as described below.
  - The mobile station shall set FULL_BSPM_IND to '1'.
- If $DIFF\_BSPM_r$ equals '1',
  - If ($BSPM\_MSG\_SEQ_r$ - $BSPM\_MSG\_SEQ_s$) modulo 64 is greater than one, the mobile station shall perform the following:
    - The mobile station shall delete the currently stored *BCMC Service Parameters Message* parameters and shall store the parameters received in this *BCMC Service Parameters Message* as described below.
    - The mobile station shall set FULL_BSPM_IND to '0'.
  - Otherwise, the mobile station shall perform the following:
    - The mobile station shall update the currently stored *BCMC Service Parameters Message* parameters with the parameters received in this *BCMC Service Parameters Message* as described below.

The mobile station shall delete $BCMC\_RETRY\_DELAY\_LIST_s$[i] from BCMC Retry Delay List if $BCMC\_RETRY\_DELAY\_LIST_s$[i].BCMC_FLOW_ID is included in the *BCMC Service Parameters Message*.

The mobile station shall store the following parameters:

- BSPM sequence number ($BSPM\_MSG\_SEQ_s$ = $BSPM\_MSG\_SEQ_r$).
- Frequency change registration required indication ($FREQ\_CHG\_REG\_REQUIRED_s$ = $FREQ\_CHG\_REG\_REQUIRED_r$).
- Frequency change registration timer ($FREQ\_CHG\_REG\_TIMER_s$ = $FREQ\_CHG\_REG\_TIMER_r$) if $FREQ\_CHG\_REG\_TIMER\_IND_r$ equals '1'; otherwise, set $FREQ\_CHG\_REG\_TIMER_s$ to NULL.
- Autonomous BCMC request allowed indicator ($AUTO\_REQ\_ALLOWED\_IND_s$ = $AUTO\_REQ\_ALLOWED\_IND_r$).
- If USE_TIME_r is set to '1' set the $BSPM\_ACTION\_TIME_s$ = $ACTION\_TIME_r$; otherwise, set the $BSPM\_ACTION\_TIME_s$ = NULL. A BSPM with an explicit action time shall take effect when System Time (in 80 ms units) modulo 64 becomes equal

to $BSPM\_ACTION\_TIME_s$.

- BCMC on traffic channel supported indicator ($BCMC\_ON\_TRAFFIC\_SUP_s = BCMC\_ON\_TRAFFIC\_SUP_r$).

- Length of time stamp for use on r-csch ($ACH\_TIME\_STAMP\_SHORT\_LENGTH_s = ACH\_TIME\_STAMP\_SHORT\_LENGTH_r$) if $NON\_DEFAULT\_VALUE\_INCLUDED_r$ equals '1'; otherwise, $ACH\_TIME\_STAMP\_SHORT\_LENGTH_s$ shall be set to 10.

- Length of time stamp ($TIME\_STAMP\_LONG\_LENGTH_s = TIME\_STAMP\_LONG\_LENGTH_r$) if $NON\_DEFAULT\_VALUE\_INCLUDED_r$ equals '1'; otherwise, $TIME\_STAMP\_LONG\_LENGTH_s$ shall be set to 52.

- Unit for time stamp length ($TIME\_STAMP\_UNIT_s = TIME\_STAMP\_UNIT_r$) if $NON\_DEFAULT\_VALUE\_INCLUDED_r$ equals '1'; otherwise, $TIME\_STAMP\_UNIT_s$ shall be set to 6.

- If $REGISTRATION\_REQ\_FLAG\_INCL_r$ equals '1', the mobile station shall compute and store a BCMC registration required timer expiration value:

  $$REGISTRATION\_REQ\_TIMER\_MAX = (2^{REGISTRATION\_REQ\_TIMER\_PERIOD_r} X\ 80\ ms).$$

- For i=1 to NUM_FSCH_r, store the following:

  - $FBSCH\_LIST_s[i].FSCH\_ID$ = the position where this Forward Supplemental Channel is listed in this message (i.e. First Forward Supplemental Channel listed is given FSCH_ID of '001', second one is given FSCH_ID of '010', and so on).

  - $FBSCH\_LIST_s[i].FSCH\_BAND\_CLASS$ = ith occurrence of $FSCH\_BAND\_CLASS_r$ (Band class of the Forward Supplemental Channel) if $FSCH\_BAND\_CLASS\_INCL_r$ equals '1'; otherwise, $FBSCH\_LIST_s[i].FSCH\_BAND\_CLASS = CDMABAND_s$.

  - $FBSCH\_LIST_s[i].FSCH\_FREQ$ = ith occurrence of $FSCH\_FREQ_r$ (Frequency assignment of the forward broadcast supplemental channel) if $FSCH\_FREQ\_INCL_r$ equals '1'; otherwise, $FBSCH\_LIST_s[i].FSCH\_FREQ = CDMACH_s$.

  - $FBSCH\_LIST_s[i].FSCH\_CODE\_CHAN$ = ith occurrence of $FSCH\_CODE\_CHAN_r$ (Code channel index of the forward broadcast supplemental channel)

  - $FBSCH\_LIST_s[i].FSCH\_PLCM$ (Public Long code mask of the Forward Broadcast Supplemental Channel) shall be set as follows:

+ If FSCH_PLCM_SCHEME_INDr equals ‘00’, FBSCH_LISTs[i].FSCH_PLCM shall be set to PLCM_42 as specified in 2.6.13.10.1.

+ If FSCH_PLCM_SCHEME_INDr equals ‘01’, FBSCH_LISTs[i].FSCH_PLCM shall be set to PLCM_42 as specified in 2.6.13.10.2.

+ If FSCH_PLCM_SCHEME_INDr equals ‘10’, the mobile station shall perform the following:

  o If $FSCH\_PLCM\_IND_r$ equals ‘0’, $FBSCH\_LIST_s$[i].FSCH_PLCM shall be set to PLCM_42 as specified in 2.6.13.10.1.

  o If $FSCH\_PLCM\_IND_r$ equals ‘1’, $FBSCH\_LIST_s$[i].FSCH_PLCM shall be set to PLCM_42 as specified in 2.6.13.10.2.

- $FBSCH\_LIST_s$[i].FSCH_MUX_OPTION = ith occurrence of $FSCH\_MUX\_OPTION_r$ (Multiplex Option of the Forward Broadcast Supplemental Channel).

- $FBSCH\_LIST_s$[i].FSCH_RC = ith occurrence of $FSCH\_RC_r$ (Radio configuration of the forward broadcast supplemental channel).

- $FBSCH\_LIST_s$[i].FSCH_CODING = ith occurrence of $FSCH\_CODING_r$ (Coding type of the Forward Broadcast Supplemental Channel).

- $FBSCH\_LIST_s$[i].FSCH_OUTERCODE_RATE = ith occurrence of $FSCH\_OUTERCODE\_RATE_r$ (Outer Code Rate of the Forward Broadcast Supplemental Channel) if $FSCH\_OUTERCODE\_INCL_r$ equals ‘1’; otherwise, $FBSCH\_LIST_s$[i].FSCH_OUTERCODE_RATE = NULL.

- $FBSCH\_LIST_s$[i].FSCH_OUTERCODE_OFFSET = ith occurrence of $FSCH\_OUTERCODE\_OFFSET_r$ (Outer Coding Buffer Offset of the Forward Broadcast Supplemental Channel) if $FSCH\_OUTERCODE\_INCL_r$ equals ‘1’; otherwise, $FBSCH\_LIST_s$[i].FSCH_OUTERCODE_OFFSET = NULL.

- $FBSCH\_LIST_s$[i].FSCH_NUM_BITS_IDX = ith occurrence of $FSCH\_NUM\_BITS\_IDX_r$ (Number of information bits index of the forward broadcast supplemental channel).

- $FBSCH\_LIST_s$[i].FSCH_FRAME_40_USED = ith occurrence of $FSCH\_FRAME\_40\_USED_r$ (40ms frame used indicator of the forward broadcast supplemental channel).

- $FBSCH\_LIST_s$[i].FSCH_FRAME_80_USED = ith occurrence of $FSCH\_FRAME\_80\_USED_r$ (80ms frame used indicator of the forward broadcast supplemental channel).

- FBSCH_LIST$_s$[i].TDM_STRUCTURE_IND = ith occurrence of TDM_STRUCTURE_IND$_r$ (TDM structure used indicator).
  - FBSCH_LIST$_s$[i].TDM_SLOT_LENGTH = ith occurrence of TDM_SLOT_LENGTH$_r$ (TDM slot length).
  - If TDM_SUPER_PERIOD_MASK_LEN$_r$ is included, FBSCH_LIST$_s$[i].TDM_SUPER_PERIOD_MASK_LEN = ith occurrence of TDM_SUPER_PERIOD_MASK_LEN$_r$ (TDM super period mask length indicator). Otherwise, set FBSCH_LIST$_s$[i].TDM_SUPER_PERIOD_MASK_LEN as specified in Table 3.7.2.3.2.38-3, based on FSCH_OUTERCODE_RATE field corresponding to FSCH_ID field included in this record
  - If TDM_MEGA_PERIOD_MASK_LEN$_r$ is included, FBSCH_LIST$_s$[i].TDM_MEGA_PERIOD_MASK_LEN = ith occurrence of TDM_MEGA_PERIOD_MASK_LEN$_r$ (TDM mega period mask length indicator). Otherwise, set FBSCH_LIST$_s$[i].TDM_MEGA_PERIOD_MASK_LEN as specified in Table 3.7.2.3.2.38-6.

- For i=1 to the number of flows included in this message, store the following:
  - BCMC_FLOW_LIST$_s$[i].BCMC_FLOW_ID = ith occurrence of BCMC_FLOW_ID (BCMC flow identifier). See section 2.6.13.11.
  - If REGISTRATION_REQ_FLAG_INCL$_r$ equals ‘1’, and ith occurrence of FLOW_INFO_ON_OTHER_FREQ$_r$ equals ‘0’, BCMC_FLOW_LIST$_s$[i].REGISTRATION_REQ_FLAG = ith occurrence of REGISTRATION_REQ_FLAG$_r$(Registration required flag).
  - If AUTH_SIGNATURE_REQUIRED$_r$ equals ‘1’, BCMC_FLOW_LIST$_s$[i].AUTH_SIGNATURE_REQ_IND = ith occurrence of AUTH_SIGNATURE_REQ_IND$_r$(Authorization signature required indication).
  - If BCMC_ON_TRAFFIC_SUP$_r$ is set to ‘1’, BCMC_FLOW_LIST$_s$[i].BCMC_FLOW_ON_TRAFFIC_IND = ith occurrence of BCMC_FLOW_ON_TRAFFIC_IND$_r$ (BCMC flow on traffic channel supported identifier); otherwise, BCMC_FLOW_LIST$_s$[i].BCMC_FLOW_ON_TRAFFIC_IND = ‘0’.
  - If the ith occurrence of NUM_LPM_ENTRIES$_r$ equals ‘000’, then BCMC_FLOW_LIST$_s$[i].BCMC_FLOW_ON_IND = 0; otherwise, BCMC_FLOW_LIST$_s$[i].BCMC_FLOW_ON_IND = 1 (BCMC flow On or Off Indicator).
  - For j=1 to NUM_LPM_ENTRIES$_r$, store the following:

+ BCMC_FLOW_LIST$_s$[i].LPM_INFO[j].FSCH_ID = jth occurrence of FSCH_ID$_r$ (Forward broadcast supplemental channel identifier).

+ If jth occurrence of TDM_USED_IND$_r$ is set to 1, the mobile station shall store the following:

  - BCMC_FLOW_LIST$_s$[i].LPM_INFO[j]. TDM_MASK = jth occurrence of TDM_MASK$_r$ (TDM mask).

  - If TDM_SUPER_PERIOD_MASK_INCL$_r$ is set to '1', BCMC_FLOW_LIST$_s$[i].LPM_INFO[j].TDM_SUPER_PERIOD_MASK = jth occurrence of TDM_SUPER_PERIOD_MASK$_r$ (TDM super period mask). Otherwise, set all bits of BCMC_FLOW_LIST$_s$[i].LPM_INFO[j].TDM_SUPER_PERIOD_MASK to '1'.

  - If TDM_MEGA_PERIOD_MASK_INCL$_r$ is set to '1', BCMC_FLOW_LIST$_s$[i].LPM_INFO[j].TDM_MEGA_PERIOD_MASK = jth occurrence of TDM_MEGA_PERIOD_MASK$_r$ (TDM mega period mask). Otherwise, set all bits of BCMC_FLOW_LIST$_s$[i].LPM_INFO[j].TDM_MEGA_PERIOD_MASK to '1'.

  - TDM period for BCMC flow identified by BCMC_FLOW_LIST$_s$[i].BCMC_FLOW_ID on Forward Supplemental Channel identified by BCMC_FLOW_LIST$_s$[i].LPM_INFO[j].FSCH_ID is aligned at system time (t) as specified in section 2.6.13.12.

+ BCMC_FLOW_LIST$_s$[i].LPM_INFO[j].BSR_ID = jth occurrence of BSR_ID$_r$ (BCMC Service Reference identifier).

+ For k=0 to NUM_NGHBR$_r$, store the following:

  - BCMC_FLOW_LIST$_s$[i].LPM_INFO[j].NGHBR_INFO[k].NGHBR_PN = kth occurrence of NGHBR_PN$_r$ (Neighbor pilot PN sequence offset index).

  - BCMC_FLOW_LIST$_s$[i].LPM_INFO[j].NGHBR_INFO[k]. NGHBR_BCMC_CONFIG = kth occurrence of NGHBR_BCMC_CONFIG$_r$ (Neighbor BCMC flow configuration).

  - If NGHBR_BCMC_CONFIG$_r$ equals '000', BCMC_FLOW_LIST$_s$[i]. LPM_INFO[j].NGHBR_INFO[k].NGHBR_FSCH_BAND_CLASS = NULL; otherwise, the mobile station shall store the following:

◊ If $NGHBR\_BCMC\_CONFIG_r$ equals '010' or $NGHBR\_BCMC\_CONFIG_r$ equals '001' and $NGHBR\_FSCH\_BAND\_CLASS\_INCL_r$ equals '0', $BCMC\_FLOW\_LIST_s$[i].LPM_INFO[j].NGHBR_INFO[k]. NGHBR_FSCH_BAND_CLASS = $FBSCH\_LIST_s$[i].NGHBR_FSCH_BAND_CLASS where i corresponds to the entry of $FBSCH\_LIST_s$ where $FBSCH\_LIST_s$[i].FSCH_ID equals FSCH_ID of this Forward Supplemental Channel.

◊ Otherwise, $BCMC\_FLOW\_LIST_s$[i].LPM_INFO[j].NGHBR_INFO[k]. NGHBR_FSCH_BAND_CLASS = kth occurrence of $NGHBR\_FSCH\_BAND\_CLASS_r$ (Band class of the Forward Supplemental Channel in the neighbor base station).

o If $NGHBR\_BCMC\_CONFIG_r$ equals '000', $BCMC\_FLOW\_LIST_s$[i].LPM_INFO[j].NGHBR_INFO[k]. NGHBR_FSCH_CDMA_FREQ = NULL; otherwise, the mobile station shall store the following:

◊ If $NGHBR\_BCMC\_CONFIG_r$ equals '010' or $NGHBR\_BCMC\_CONFIG_r$ equals '001' and $NGHBR\_FSCH\_FREQ\_INCL_r$ equals '0', $BCMC\_FLOW\_LIST_s$[i].LPM_INFO[j].NGHBR_INFO[k]. NGHBR_FSCH_CDMA_FREQ = $FBSCH\_LIST_s$[i].FSCH_CDMA_FREQ where i corresponds to the entry of $FBSCH\_LIST_s$ where $FBSCH\_LIST_s$[i].FSCH_ID equals FSCH_ID of this Forward Supplemental Channel.

◊ Otherwise, $BCMC\_FLOW\_LIST_s$[i].LPM_INFO[j].NGHBR_INFO[k]. NGHBR_FSCH_CDMA_FREQ = kth occurrence of $NGHBR\_FSCH\_CDMA\_FREQ_r$ (Neighbor Frequency assignment of the forward broadcast supplemental channel).

o If $NGHBR\_BCMC\_CONFIG_r$ equals '000', $BCMC\_FLOW\_LIST_s$[i].LPM_INFO[j].NGHBR_INFO[k]. NGHBR_FSCH_CODE_CHAN = NULL; otherwise, the mobile station shall store the following:

◊ If $NGHBR\_BCMC\_CONFIG_r$ equals '001' or '010' and $NGHBR\_FSCH\_CODE\_CHAN\_INCL_r$ equals '0', $BCMC\_FLOW\_LIST_s$[i].LPM_INFO[j].NGHBR_INFO[k]. NGHBR_FSCH_CODE_CHAN = $FBSCH\_LIST_s$[i].FSCH_CODE_CHAN where i corresponds to the entry of $FBSCH\_LIST_s$ where $FBSCH\_LIST_s$[i].FSCH_ID equals FSCH_ID of this Forward Supplemental Channel.

- ◊ Otherwise, BCMC_FLOW_LIST$_s$[i].LPM_INFO[j].NGHBR_INFO[k]. NGHBR_FSCH_CODE_CHAN = kth occurrence of NGHBR_FSCH_CODE_CHAN$_r$ (Neighbor pilot forward broadcast supplemental channel code channel index).

- o If NGHBR_BCMC_CONFIG$_r$ equals ‘000’, BCMC_FLOW_LIST$_s$[i].LPM_INFO[j].NGHBR_INFO[k]. NGHBR_FSCH_PLCM = NULL; otherwise, the mobile station shall store the following:

  - ◊ If NGHBR_BCMC_CONFIG$_r$ equals ‘010’ or NGHBR_BCMC_CONFIG$_r$ equals ‘001’ and NGHBR_FSCH_PARMS_INCL$_r$ equals ‘0’, BCMC_FLOW_LIST$_s$[i].LPM_INFO[j].NGHBR_INFO[k]. NGHBR_FSCH_PLCM = FBSCH_LIST$_s$[i].FSCH_PLCM where i corresponds to the entry of FBSCH_LIST$_s$ where FBSCH_LIST$_s$[i].FSCH_ID equals FSCH_ID of this FORWARD SUPPLEMENTAL CHANNEL.

  - ◊ Otherwise, the mobile station shall perform the following:

    - o If NGHBR_FSCH_PLCM_IND$_r$ equals ‘0’ BCMC_FLOW_LIST$_s$[i].LPM_INFO[j].NGHBR_INFO[k]. NGHBR_FSCH_PLCM shall be set to PLCM_42 as specified in 2.6.13.10.1.

    - o If NGHBR_FSCH_PLCM_IND$_r$ equals ‘1’ BCMC_FLOW_LIST$_s$[i].LPM_INFO[j].NGHBR_INFO[k]. NGHBR_FSCH_PLCM shall be set to PLCM_42 as specified in 2.6.13.10.2.

- o If NGHBR_BCMC_CONFIG$_r$ equals ‘000’, BCMC_FLOW_LIST$_s$[i].LPM_INFO[j].NGHBR_INFO[k]. NGHBR_FSCH_MUX_OPTION = NULL; otherwise, the mobile station shall store the following:

  - ◊ If NGHBR_BCMC_CONFIG$_r$ equals ‘010’ or NGHBR_BCMC_CONFIG$_r$ equals ‘001’ and NGHBR_FSCH_PARMS_INCL$_r$ equals ‘0’, BCMC_FLOW_LIST$_s$[i].LPM_INFO[j].NGHBR_INFO[k]. NGHBR_FSCH_MUX_OPTION = FBSCH_LIST$_s$[i].FSCH_MUX_OPTION where i corresponds to the entry of FBSCH_LIST$_s$ where FBSCH_LIST$_s$[i].FSCH_ID equals FSCH_ID of this Forward Supplemental Channel.

  - ◊ Otherwise, BCMC_FLOW_LIST$_s$[i].LPM_INFO[j].NGHBR_INFO[k]. NGHBR_FSCH_MUX_OPTION = kth occurrence of NGHBR_FSCH_MUX_OPTION$_r$ (Multiplex Option of the Forward Broadcast Supplemental Channel in the neighbor base station).

- If $NGHBR\_BCMC\_CONFIG_r$ equals '000', $BCMC\_FLOW\_LIST_s$[i].LPM_INFO[j].NGHBR_INFO[k]. NGHBR_FSCH_RC = NULL; otherwise, the mobile station shall store the following:
  - If $NGHBR\_BCMC\_CONFIG_r$ equals '010' or $NGHBR\_BCMC\_CONFIG_r$ equals '001' and $NGHBR\_FSCH\_PARMS\_INCL_r$ equals '0', $BCMC\_FLOW\_LIST_s$[i].LPM_INFO[j].NGHBR_INFO[k]. NGHBR_FSCH_RC = $FBSCH\_LIST_s$[i].FSCH_RC where i corresponds to the entry of $FBSCH\_LIST_s$ where $FBSCH\_LIST_s$[i].FSCH_ID equals FSCH_ID of this Forward Supplemental Channel.
  - Otherwise, $BCMC\_FLOW\_LIST_s$[i].LPM_INFO[j].NGHBR_INFO[k]. NGHBR_FSCH_RC = kth occurrence of $NGHBR\_FSCH\_RC_r$ (Neighbor Radio configuration of the forward broadcast supplemental channel).
- If $NGHBR\_BCMC\_CONFIG_r$ equals '000', $BCMC\_FLOW\_LIST_s$[i].LPM_INFO[j].NGHBR_INFO[k].NGHBR_FSCH_CODING = NULL; otherwise, the mobile station shall store the following:
  - If $NGHBR\_BCMC\_CONFIG_r$ equals '010' or $NGHBR\_BCMC\_CONFIG_r$ equals '001' and $NGHBR\_FSCH\_PARMS\_INCL_r$ equals '0', $BCMC\_FLOW\_LIST_s$[i].LPM_INFO[j].NGHBR_INFO[k].NGHBR_FSCH_CODING = $FBSCH\_LIST_s$[i].NGHBR_FSCH_CODING where i corresponds to the entry of $FBSCH\_LIST_s$ where $FBSCH\_LIST_s$[i].FSCH_ID equals FSCH_ID of this Forward Supplemental Channel.
  - Otherwise, $BCMC\_FLOW\_LIST_s$[i].LPM_INFO[j].NGHBR_INFO[k].NGHBR_FSCH_CODING = kth occurrence of $NGHBR\_FSCH\_CODING_r$ (Coding type of the Forward Broadcast Supplemental Channel in this neighbor base station).
- If $NGHBR\_BCMC\_CONFIG_r$ equals '000', $BCMC\_FLOW\_LIST_s$[i].LPM_INFO[j].NGHBR_INFO[k].NGHBR_FSCH_OUTERCODE_RATE = NULL; otherwise, the mobile station shall store the following:
  - If $NGHBR\_BCMC\_CONFIG_r$ equals '010' or $NGHBR\_BCMC\_CONFIG_r$ equals '001' and $NGHBR\_FSCH\_PARMS\_INCL_r$ equals '0', $BCMC\_FLOW\_LIST_s$[i].LPM_INFO[j].NGHBR_INFO[k].NGHBR_FSCH_OUTERCODE_RATE = $FBSCH\_LIST_s$[i].NGHBR_FSCH_OUTERCODE_RATE where i corresponds to the entry of $FBSCH\_LIST_s$ where $FBSCH\_LIST_s$[i].FSCH_ID equals FSCH_ID of this Forward Supplemental Channel.

- ◊ Otherwise, BCMC_FLOW_LIST$_s$[i].LPM_INFO[j].NGHBR_INFO[k].NGHBR_FSCH_OUTERCODE_RATE = kth occurrence of NGHBR_FSCH_OUTERCODE_RATE$_r$ (Outer Code Rate of the Forward Broadcast Supplemental Channel in this neighbor base station) if NGHBR_FSCH_OUTERCODE_INCL$_r$ equals '1' ; otherwise, BCMC_FLOW_LIST$_s$[i].LPM_INFO[j].NGHBR_INFO[k].NGHBR_FSCH_OUTERCODE_RATE = NULL.

- o If NGHBR_BCMC_CONFIG$_r$ equals '000', BCMC_FLOW_LIST$_s$[i].LPM_INFO[j].NGHBR_INFO[k].NGHBR_FSCH_OUTERCODE_OFFSET = NULL; otherwise, the mobile station shall store the following:

  - ◊ If NGHBR_BCMC_CONFIG$_r$ equals '010' or NGHBR_BCMC_CONFIG$_r$ equals '001' and NGHBR_FSCH_PARMS_INCL$_r$ equals '0', BCMC_FLOW_LIST$_s$[i].LPM_INFO[j].NGHBR_INFO[k].NGHBR_FSCH_OUTERCODE_OFFSET = FBSCH_LIST$_s$[i].NGHBR_FSCH_OUTERCODE_OFFSET where i corresponds to the entry of FBSCH_LIST$_s$ where FBSCH_LIST$_s$[i].FSCH_ID equals FSCH_ID of this Forward Supplemental Channel.

  - ◊ Otherwise, BCMC_FLOW_LIST$_s$[i].LPM_INFO[j].NGHBR_INFO[k].NGHBR_FSCH_OUTERCODE_OFFSET = kth occurrence of NGHBR_FSCH_OUTERCODE_OFFSET$_r$ (Outer Coding Buffer Offset of the Forward Broadcast Supplemental Channel in this neighbor base station) if NGHBR_FSCH_OUTERCODE_INCL$_r$ equals '1' ; otherwise, BCMC_FLOW_LIST$_s$[i].LPM_INFO[j].NGHBR_INFO[k].NGHBR_FSCH_OUTERCODE_OFFSET = NULL.

- o If NGHBR_BCMC_CONFIG$_r$ equals '000', BCMC_FLOW_LIST$_s$[i].LPM_INFO[j].NGHBR_INFO[k]. NGHBR_FSCH_NUM_BITS_IDX = NULL; otherwise, the mobile station shall store the following:

  - ◊ If NGHBR_BCMC_CONFIG$_r$ equals '010' or NGHBR_BCMC_CONFIG$_r$ equals '001' and NGHBR_FSCH_PARMS_INCL$_r$ equals '0', BCMC_FLOW_LIST$_s$[i].LPM_INFO[j].NGHBR_INFO[k]. NGHBR_FSCH_NUM_BITS_IDX = FBSCH_LIST$_s$[i].FSCH_NUM_BITS_IDX where i corresponds to the entry of FBSCH_LIST$_s$ where FBSCH_LIST$_s$[i].FSCH_ID equals FSCH_ID of this Forward Supplemental Channel.

◊ Otherwise, $BCMC\_FLOW\_LIST_s$[i].LPM_INFO[j].NGHBR_INFO[k]. NGHBR_FSCH_NUM_BITS_IDX = kth occurrence of $NGHBR\_FSCH\_NUM\_BITS\_IDX_r$ (Neighbor Number of information bits index of the forward broadcast supplemental channel).

- If $NGHBR\_BCMC\_CONFIG_r$ equals '000', $BCMC\_FLOW\_LIST_s$[i].LPM_INFO[j].NGHBR_INFO[k]. NGHBR_FSCH_FRAME_40_USED = NULL; otherwise, the mobile station shall store the following:

  ◊ If $NGHBR\_BCMC\_CONFIG_r$ equals '010' or $NGHBR\_BCMC\_CONFIG_r$ equals '001' and $NGHBR\_FSCH\_PARMS\_INCL_r$ equals '0', $BCMC\_FLOW\_LIST_s$[i].LPM_INFO[j].NGHBR_INFO[k]. NGHBR_FSCH_FRAME_40_USED = $FBSCH\_LIST_s$[i].FSCH_FRAME_40_USED where i corresponds to the entry of $FBSCH\_LIST_s$ where $FBSCH\_LIST_s$[i].FSCH_ID equals FSCH_ID of this FORWARD SUPPLEMENTAL CHANNEL.

  ◊ Otherwise, $BCMC\_FLOW\_LIST_s$[i].LPM_INFO[j].NGHBR_INFO[k]. NGHBR_FSCH_FRAME_40_USED = kth occurrence of $NGHBR\_FSCH\_FRAME\_40\_USED_r$ (Neighbor 40ms frame used indicator of the forward broadcast supplemental channel).

- If $NGHBR\_BCMC\_CONFIG_r$ equals '000', $BCMC\_FLOW\_LIST_s$[i].LPM_INFO[j].NGHBR_INFO[k]. NGHBR_FSCH_FRAME_80_USED = NULL; otherwise, the mobile station shall store the following:

  ◊ If $NGHBR\_BCMC\_CONFIG_r$ equals '010' or $NGHBR\_BCMC\_CONFIG_r$ equals '001' and $NGHBR\_FSCH\_PARMS\_INCL_r$ equals '0', $BCMC\_FLOW\_LIST_s$[i].LPM_INFO[j].NGHBR_INFO[k]. NGHBR_FSCH_FRAME_80_USED = $FBSCH\_LIST_s$[i].FSCH_FRAME_80_USED where i corresponds to the entry of $FBSCH\_LIST_s$ where $FBSCH\_LIST_s$[i].FSCH_ID equals FSCH_ID of this FORWARD SUPPLEMENTAL CHANNEL.

  ◊ Otherwise, $BCMC\_FLOW\_LIST_s$[i].LPM_INFO[j].NGHBR_INFO[k]. NGHBR_FSCH_FRAME_80_USED = kth occurrence of $NGHBR\_FSCH\_FRAME\_80\_USED_r$ (Neighbor 80ms frame used indicator of the forward broadcast supplemental channel).

For each of the neighboring base stations contained in the *BCMC Service Parameters Message* and supports the broadcast control channel, the mobile station shall store the following informations from the message:

- SR1 Non-TD BCCH support indicator ($BCMC\_SR1\_BCCH\_NON\_TD\_INCL_s$ = $BCMC\_SR1\_BCCH\_NON\_TD\_INCL_r$)

- SR1 TD BCCH support indicator ($BCMC\_SR1\_TD\_INCL_s = BCMC\_SR1\_TD\_INCL_r$)
- If $BCMC\_SR1\_BCCH\_NON\_TD\_INCL_r$ is equal to '1':
  - $BCMC\_SR1\_BRAT\_NON\_TD_s = BCMC\_SR1\_BRAT\_NON\_TD_r$;
  - $BCMC\_SR1\_CRAT\_NON\_TD_s = BCMC\_SR1\_CRAT\_NON\_TD_r$;
  - $BCMC\_BCCH\_CODE\_CHAN\_NON\_TD_s = BCMC\_SR1\_BCCH\_CODE\_CHAN\_NON\_TD_r$.
- If $BCMC\_SR1\_TD\_INCL_r$ is included and is equal to '1', and the mobile station supports the Transmit Diversity indicated by $BCMC\_SR1\_TD\_MODE_r$:
  - $BCMC\_SR1\_BRAT\_TD_s = BCMC\_SR1\_BRAT\_TD_r$;
  - $BCMC\_SR1\_CRAT\_TD_s = BCMC\_SR1\_CRAT\_TD_r$;
  - $BCMC\_BCCH\_CODE\_CHAN\_TD_s = BCMC\_SR1\_BCCH\_CODE\_CHAN\_TD_r$.
- If the mobile station supports the Transmit Diversity, $BCMC\_SR1\_BCCH\_NON\_TD\_INCL_r$ is equal to '1', and $SR1\_TD\_INCL_r$ is equal to '0':
  - $BCMC\_SR1\_BRAT\_TD_s = BCMC\_SR1\_BRAT\_NON\_TD_r$;
  - $BCMC\_SR1\_CRAT\_TD_s = BCMC\_SR1\_CRAT\_NON\_TD_r$;
  - $BCMC\_BCCH\_CODE\_CHAN\_TD_s = BCMC\_SR1\_BCCH\_CODE\_CHAN\_NON\_TD_r$.

2.6.2.2.19 Access Point Pilot Information Message

Whenever an *Access Point Pilot Information Message* is received on the Paging Channel or the Primary Broadcast Control Channel, the configuration message sequence number, $CONFIG\_MSG\_SEQ_r$, shall be compared to that stored in $AP\_PILOT\_INFO\_MSG\_SEQ_s$. If the comparison results in a match, the mobile station may refresh the lifetime that the information in the message remains valid to $LIFETIME_s$ minutes after the reception of the message. If the comparison results in a mismatch, then the mobile station shall process the remaining fields in the message as follows.

The mobile station shall store the following parameters:

- Configuration message sequence number

  ($CONFIG\_MSG\_SEQ_s = CONFIG\_MSG\_SEQ_r$,

  $AP\_PILOT\_INFO\_MSG\_SEQ_s = CONFIG\_MSG\_SEQ_r$)
- Lifetime of the message

  ($LIFETIME_s = LIFETIME_r$),

For each of the Access Point Pilot Information record contained in the *Access Point Pilot Information Message*, the mobile station shall perform the following:

- Set the AP_ASSN_TYPE field of $AP\_NGHBR\_REC_s[i]$ to the AP_ASSN_TYPE field of the ith occurrence of $APPI\_REC_r$.
- If the AP_SID_SAME_AS_PREVIOUS field of the ith occurrence of $APPI\_REC_r$ is set

to '1', set the AP_SID field of $AP\_NGHBR\_REC_s[i]$ to the value of AP_SID field of $AP\_NGHBR\_REC_s[i-1]$. Otherwise, set the AP_SID field of $AP\_NGHBR\_REC[i]_s$ to the AP_SID field of the ith occurrence of $APPI\_REC_r$.

- If the AP_NID_SAME_AS_PREVIOUS field of the ith occurrence of $APPI\_REC_r$ is set to '1', set the AP_NID field of $AP\_NGHBR\_REC_s[i]$ to the value of AP_NID field of $AP\_NGHBR\_REC_s[i-1]$. Otherwise, set the AP_NID field of $AP\_NGHBR\_REC[i]_s$ to the AP_NID field of the ith occurrence of $APPI\_REC_r$.
- If the AP_BAND_SAME_AS_PREVIOUS field of the ith occurrence of $APPI\_REC_r$ is set to '1', set the AP_BAND field of $AP\_NGHBR\_REC_s[i]$ to the value of AP_BAND field of $AP\_NGHBR\_REC_s[i-1]$. Otherwise, set the AP_BAND field of $AP\_NGHBR\_REC[i]_s$ to the AP_BAND field of the ith occurrence of $APPI\_REC_r$.
- If the AP_FREQ_SAME_AS_PREVIOUS field of the ith occurrence of $APPI\_REC_r$ is set to '1', set the AP_FREQ field of $AP\_NGHBR\_REC_s[i]$ to the value of AP_FREQ field of $AP\_NGHBR\_REC_s[i-1]$. Otherwise, set the AP_FREQ field of $AP\_NGHBR\_REC_s[i]$ to the AP_FREQ field of the ith occurrence of $APPI\_REC_r$.
- If the AP_ PN_REC_SAME_AS_PREVIOUS field of the ith occurrence of $APPI\_REC_r$ is set to '1', set the AP_PN_REC array values of $AP\_NGHBR\_REC_s[i]$ to the values of AP_PN_REC array of $AP\_NGHBR\_REC_s[i-1]$. Otherwise, set the AP_PN_REC array values (of length AP_PN_COUNT) of $AP\_NGHBR\_REC_s[i]$ as follows:
  - If AP_PN_REC_TYPE field of the ith occurrence of $APPI\_REC_r$ is set to '000', set the kth value of the AP_PN_REC array of $AP\_NGHBR\_REC_s[i]$ to the kth value of AP_PN field in the ith occurrence of $APPI\_REC_r$, where k is between 0 and AP_PN_COUNT-1.
  - If AP_PN_REC_TYPE field of the ith occurrence of $APPI\_REC_r$ is set to '001', set the kth value of the AP_PN_REC array of $AP\_NGHBR\_REC_s[i]$ to the AP_PN_START + (k x AP_PN_INC), where AP_PN_START and AP_PN_INC are fields in the ith occurrence of $APPI\_REC_r$, where k is between 0 and AP_PN_COUNT-1.

The mobile station may store and use the information in the message if no *Access Point Pilot Information Message* is received with in $LIFETIME_s$ minutes of the reception of the *Access Point Pilot Information Message* that the information is obtained. The mobile station shall not use the information after $LIFETIME_s$ minutes of the reception of the last *Access Point Pilot Information Message*.

2.6.2.2.20 Access Point Identification Message

Whenever an *Access Point Identification Message* is received on the Paging Channel or the Primary Broadcast Control Channel, the configuration message sequence number, $CONFIG\_MSG\_SEQ_r$, shall be compared to that stored in $AP\_IDT\_MSG\_SEQ_s$. If the comparison results in a match, the mobile station may ignore the message. If the comparison results in a mismatch, then the mobile station shall process the remaining fields in the message as follows.

The mobile station shall store the following parameters:

- Configuration message sequence number
  (CONFIG_MSG_SEQ$_s$ = CONFIG_MSG_SEQ$_r$,
  AP_IDT_MSG_SEQ$_s$ = CONFIG_MSG_SEQ$_r$)
- ASSTN_TYPE$_s$ = ASSTN_TYPE$_r$
- System identification (SID$_s$ = SID$_r$)
- Network identification (NID$_s$ = NID$_r$)
- Access Point identification (AP_ID$_s$ = AP_ID$_r$)
- Access Point identification mask (AP_ID_MASK$_s$ = AP_ID_MASK$_r$)
- MSC identification of the base station (IOS_MSC_ID$_s$ = IOS_MSC_ID$_r$)
- Cell identification of the base station IOS_CELL_ID$_s$ = IOS_CELL_ID$_r$)

If the HRPD_ACQ_REC_INCL field in the message is set to '1', then the mobile station shall store the following fields:

- High Rate Packet Data PN (HRPD_PN$_s$ = HRPD_PN$_r$)
- High Rate Packet Data band class (HRPD_BAND_CLASS$_s$ = HRPD_BAND_CLASS$_r$)
- High Rate Packet Data channel number (HRPD_ CHANNEL$_s$ = HRPD_ CHANNEL$_r$)

Otherwise, the mobile station shall set the HRPD_BAND_CLASS$_s$ and HRPD_ CHANNEL$_s$ fields to NULL.

If the LOC_REC_TYPE field in the message is set to '001' the mobile station shall store the following:

- Base station latitude (BASE_LAT$_s$ = BASE_LAT$_r$)
- Base station longitude (BASE_LONG$_s$ = BASE_LONG$_r$)
- Base station height (BASE_ HEIGHT$_s$ = BASE_ HEIGHT$_r$)
- Base station horizontal uncertainty (LOC_UNC_H$_s$ = LOC_UNC_H$_r$)
- Base station horizontal uncertainty (LOC_UNC_V$_s$ = LOC_UNC_H$_r$)

Otherwise, the mobile station shall set the BASE_LAT$_s$, BASE_LONG$_s$, BASE_HEIGHT$_s$, LOC_UNC_H$_s$ and LOC_UNC_V$_s$ fields to NULL.

If the INTRA_FREQ_HO_HYS_INCL field in the message is set to '1', then the mobile station shall store the following field:

- Intra-frequency idle handoff hysteresis (INTRA_FREQ_HO_HYS$_s$ = INTRA_FREQ_HO_HYS$_r$)

Otherwise, the mobile station shall set the INTRA_FREQ_HO_HYS$_s$ field to NULL.

If the INTRA_FREQ_HO_SLOPE_INCL field in the message is set to '1', then the mobile station shall store the following field:

- Intra-frequency idle handoff slope ($INTRA\_FREQ\_HO\_SLOPE_s$ = $INTRA\_FREQ\_HO\_SLOPE_r$)

Otherwise, the mobile station shall set the $INTRA\_FREQ\_HO\_SLOPE_s$ field to 8.

If the INTER_FREQ_HO_HYS_INCL field in the message is set to '1', then the mobile station shall store the following field:

- Inter-frequency idle handoff hysteresis ($INTER\_FREQ\_HO\_HYS_s$ = $INTER\_FREQ\_HO\_HYS_r$)

Otherwise, the mobile station shall set the $INTER\_FREQ\_HO\_HYS_s$ field to NULL.

If the INTER_FREQ_HO_SLOPE_INCL field in the message is set to '1', then the mobile station shall store the following field:

- Inter-frequency idle handoff slope ($INTER\_FREQ\_HO\_SLOPE_s$ = $INTER\_FREQ\_HO\_SLOPE_r$)

Otherwise, the mobile station shall set the $INTER\_FREQ\_HO\_SLOPE_s$ field to 8.If the INTER_FREQ_SRCH_TH_INCL field in the message is set to '1', then the mobile station shall store the following field:

- Inter-frequency idle search threshold ($INTER\_FREQ\_SRCH\_TH_s$ = $INTER\_FREQ\_SRCH\_TH_r$)

Otherwise, the mobile station shall set the $INTER\_FREQ\_SRCH\_TH_s$ field to NULL.

2.6.2.2.21 Access Point Identification Text Message

Whenever an *Access Point Identification Text Message* is received on the Paging Channel or the Primary Broadcast Control Channel, the configuration message sequence number, $CONFIG\_MSG\_SEQ_r$, shall be compared to that stored in $AP\_ID\_TEXT\_MSG\_SEQ_s$. If the comparison results in a match, the mobile station may ignore the message. If the comparison results in a mismatch, then the mobile station shall process the remaining fields in the message as follows.

The mobile station shall store the following parameters:

- Configuration message sequence number

  ($CONFIG\_MSG\_SEQ_s$ = $CONFIG\_MSG\_SEQ_r$,

  $AP\_ID\_TEXT\_MSG\_SEQ_s$ = $CONFIG\_MSG\_SEQ_r$)

- Message Encoding ($MSG\_ENCODING_s$ = $MSG\_ENCODING_r$)

- Mobile station shall store i^{th} occurrence of the CHARi field as folllows

  $CHAR_s[i]$ = CHARi

2.6.2.2.22 General *Overhead* Information Message

Whenever a *General Overhead Information Message* is received on the Paging Channel or the Primary Broadcast Control Channel, the configuration message sequence number, $CONFIG\_MSG\_SEQ_r$, shall be compared to that stored in $GOI\_MSG\_SEQ_s$. If the comparison results in a match, the mobile station may ignore the message. If the

comparison results in a mismatch, then the mobile station shall process the remaining fields in the message as follows.

The mobile station shall store the following parameters:

- Configuration message sequence number

  ($CONFIG\_MSG\_SEQ_s = CONFIG\_MSG\_SEQ_r$,

  $GOI\_MSG\_SEQ_s = CONFIG\_MSG\_SEQ_r$)

For each of the General *Overhead* Information record contained in the *General Overhead Information Message*, the mobile station shall perform the following:

- Set the $GOI\_REC\_TYPE_s[i]$ to the GOI_REC_TYPE field of the ith occurrence of $GOI\_REC\_TYPE_r$.
- Set the $GOI\_REC_s[i]$ to the GOI_REC field of the ith occurrence of GOI_REC_r.

2.6.2.2.23 Flex Duplex CDMA Channel List Message Overview

The mobile station may receive the *Flex Duplex CDMA Channel List Message* from the Paging Channel or from the Primary Broadcast Control Channel. Whenever a *Flex Duplex CDMA Channel List Message* is received on the Paging Channel, the mobile station shall compare the configuration message sequence number, $CONFIG\_MSG\_SEQ_r$, to that stored in $FD\_CHAN\_LST\_MSG\_SEQ_s$. If the comparison results in a match, the mobile station may ignore the message. If the comparison results in a mismatch, then the mobile station shall process the remaining fields in the message as follows:

If the *Flex Duplex CDMA Channel List Message* lists CDMA channels from more than one band class and the mobile station hashes to a band class other than the current band class, the mobile station shall process this message after $NGHBR\_LST\_MSG\_SEQ_s$, $EXT\_NGHBR\_LST\_MSG\_SEQ_s$ and $GEN\_NGHBR\_LST\_MSG\_SEQ_s$ become current.

If any of the REMAINING_FIELD_INCL fields included in this message is set to '0', the mobile station shall process the remaining message after $EXT\_CHAN\_LST\_MSG\_SEQ_s$ is current.

The mobile station shall store the following parameters:

- Configuration message sequence number
  ($CONFIG\_MSG\_SEQ_s = CONFIG\_MSG\_SEQ_r$,
  $FD\_CHAN\_LST\_MSG\_SEQ_s = CONFIG\_MSG\_SEQ_r$).
- If $CAND\_BAND\_INFO\_REQ_r$ is included, the mobile station shall set $CAND\_BAND\_INFO\_REQ_s$ to $CAND\_BAND\_INFO\_REQ_r$; otherwise, the mobile station shall set $CAND\_BAND\_INFO\_REQ_s$ to '0'.
- The mobile station shall perform the following for each occurrence of the CAND_BAND_CLASS record:
  - Set the CAND_BAND_CLASS field of CAND_BAND_CLASS_REC[i] to the ith occurrence of $CAND\_BAND\_CLASS_r$.

- Set the SUBCLASS_INFO_INCL field of CAND_BAND_CLASS_REC[i] to the ith occurrence of $SUBCLASS\_INFO\_INCL_r$.
- If the ith occurrence of $SUBCLASS\_INFO\_INCL_r$ is set to '1', set the SUBCLASS_REC_LEN field of CAND_BAND_CLASS_REC[i] to the ith occurrence of $SUBCLASS\_REC\_LEN_r$.
  - If the ith occurrence of $SUBCLASS\_INFO\_INCL_r$ is set to '1', the mobile station shall perform the following for each band subclass indicator received:
    - Set the BAND_SUBCLASS_IND_REC[j] field of CAND_BAND_CLASS_REC[i] to the jth occurrence of $BAND\_SUBCLASS\_IND_r$ in the ith CAND_BAND_CLASS_REC record.
- Set the TD_MODE field of CAND_BAND_CLASS_REC[i] to the ith occurrence of TD_MODE_r
- Set the BYPASS_SYS_DET_IND field of CAND_BAND_CLASS_REC[i] to the ith occurrence of $BYPASS\_SYS\_DET\_IND_r$.
- Set the NUM_FREQ field of CAND_BAND_CLASS_REC[i] to the ith occurrence of NUM_FREQ_r.
- For each FREQ record included in the CAND_BAND_CLASS_REC[i], the mobile station shall store the following:
  - Set the CDMA_FREQ[j] field of CAND_BAND_CLASS_REC[i] to the jth occurrence of $CDMA\_FREQ_r$.
  - If the jth occurrence of REMAINING_FIELD_INCL field of the CAND_BAND_CLASS_REC[i] is set to '1', the mobile station shall store the following:
    - Set the REV_CDMA_FREQ[j] field of CAND_BAND_CLASS_REC[i] to the jth occurrence of $REV\_CDMA\_FREQ_r$ in the ith CAND_BAND_CLASS_REC record.
    - Set the RC_QPCH_HASH_IND[j] field of CAND_BAND_CLASS_REC[i] to the jth occurrence of $RC\_QPCH\_HASH\_IND_r$ if the field corresponding to the CDMA_FREQ[j] field of the ith CAND_BAND_CLASS_REC record is included, otherwise set it to '0'.
    - Set the TD_HASH_IND[j] field of CAND_BAND_CLASS_REC[i] to the jth occurrence of $TD\_HASH\_IND_r$ if the field corresponding to the CDMA_FREQ[j] field of the ith CAND_BAND_CLASS_REC record is included, otherwise set it to '0'.
    - Set the TD_POWER_LEVEL[j] field of CAND_BAND_CLASS_REC[i] to the jth occurrence of $TD\_POWER\_LEVEL_r$ if the field corresponding to the CDMA_FREQ[j] field of the ith CAND_BAND_CLASS_REC record is included, otherwise set it to '0'.

- Set the CDMA_FREQ_WEIGHT[j] field of CAND_BAND_CLASS_REC[i] to the jth occurrence of $CDMA\_FREQ\_WEIGHT_r$ if the field corresponding to the CDMA_FREQ[j] field of the ith CAND_BAND_CLASS_REC record is included, otherwise set it to '0'.

- Otherwise, the mobile station should set these fields as follows:
  - If the base station is sending the *Extended CDMA Channel List Message* and includes CDMA_FREQ[j] and CAND_BAND_CLASS pair the mobile station shall store the following:
    - Set the REV_CDMA_FREQ[j] field of CAND_BAND_CLASS_REC[i] according to [45].
    - If the $RC\_QPCH\_HASH\_IND_r$ field corresponding to the CDMA_FREQ[j] and CAND_BAND_CLASS pair in the *Extended CDMA Channel List Message* is included, set the RC_QPCH_HASH_IND[j] field of CAND_BAND_CLASS_REC[i] to this value, Otherwise, set it to '0'.
    - If the $TD\_HASH\_IND_r$ field corresponding to the CDMA_FREQ[j] and CAND_BAND_CLASS pair in the *Extended CDMA Channel List Message* is included, set the TD_HASH_IND[j] field of CAND_BAND_CLASS_REC[i] to this value, Otherwise, set it to '0'.
    - If the $TD\_POWER\_LEVEL_r$ field corresponding to the CDMA_FREQ[j] and CAND_BAND_CLASS pair in the *Extended CDMA Channel List Message* is included, set the TD_POWER_LEVEL[j] field of CAND_BAND_CLASS_REC[i] to this value, Otherwise, set it to '0'.
    - If the $CDMA\_FREQ\_WEIGHT_r$ field corresponding to the CDMA_FREQ[j] and CAND_BAND_CLASS pair in the *Extended CDMA Channel List Message* is included, set the CDMA_FREQ_WEIGHT[j] field of CAND_BAND_CLASS_REC[i] to this value, Otherwise, set it to '0'.
  - If the base station is not sending the *Extended CDMA Channel List Message* or if the CDMA_FREQ[j] and CAND_BAND_CLASS pair is not included in the *Extended CDMA Channel List Message* the mobile station shall set store the following:
    - Set the REV_CDMA_FREQ[j] field of CAND_BAND_CLASS_REC[i] according to [45].
    - Set the RC_QPCH_HASH_IND[j] field of CAND_BAND_CLASS_REC[i] to '0'.
    - Set the TD_HASH_IND[j] field of CAND_BAND_CLASS_REC[i] to '0'.
    - Set the TD_POWER_LEVEL[j] field of CAND_BAND_CLASS_REC[i] to '0'.
- Set the CDMA_FREQ_WEIGHT[j] field of CAND_BAND_CLASS_REC[i] to '0'.

If this message is received on the Paging Channel, the mobile station shall process it as specified in the section 2.6.2.2.23.1. Otherwise the mobile station shall process the message as specified in section 2.6.2.2.23.2.

2.6.2.2.23.1 Flex Duplex CDMA Channel List Message on Paging Channel

The mobile station shall determine the CDMA Channel (Frequency Assignment) for its Paging Channel as follows:

- Starting from an empty list, the mobile station shall generate the first CDMA Channel list from the *Flex Duplex CDMA Channel List Message* as follows:
  - For each band class record included in this message, the mobile station shall perform the following:
    - If band subclass information is included for this band class record ($SUBCLASS\_INFO\_INCL_S$ = '1'), the mobile station shall add only those channels belonging to the band class and band subclasses that are supported by both the mobile station and the base station, in the order they appear in the *Flex Duplex CDMA Channel List Message*[13].
    - Otherwise ($SUBCLASS\_INFO\_INCL_S$ = '0' or $P\_REV\_IN\_USE_S$ is less than 11), the mobile station shall add only those channels that it supports for the associated band class, in the order they appear in the *Flex Duplex CDMA Channel List Message*.
  - If $P\_REV\_IN\_USE_S$ is greater than or equal to 11, the mobile station shall sort the channels first by the ascending order of band class value, as specified in [30], then by the ascending order of CDMA_FREQ within each band class.
- If $RC\_QPCH\_SEL\_INCL_r$ is equal to '1' and the mobile station is capable of RC greater than 2 or capable of supporting Quick Paging Channel, the mobile station shall eliminate the channels with $RC\_QPCH\_HASH\_IND_S$ equal to '0' from the first CDMA Channel list to generate the second CDMA Channel list while preserving the order in the first CDMA Channel list. Otherwise, the mobile station shall set the second CDMA Channel list to be equal to the first CDMA Channel list.
- The mobile station shall generate the third CDMA Channel list as follows.
  - If $CDMA\_FREQ\_WEIGHT\_INCL_r$ is equal to '0', the mobile station shall set the third CDMA Channel list to be equal to the second CDMA Channel list.

[13] The mobile station will not discard frequencies as long as they belong to a subclass that is both listed in the message and supported by the mobile station. If the base station does not list any subclass, the mobile station assumes that all subclasses are supported by the base station. The subclass to frequency mapping is not provided in the *Extended CDMA Channel List Message*; the mobile station needs to refer to [45] to find the mapping.

- If $CDMA\_FREQ\_WEIGHT\_INCL_r$ is equal to '1', starting with an empty third CDMA Channel list, for each entry "E" in the second CDMA Channel list in the order they appear, the mobile station shall append N consecutive entries "E" at the end of the third CDMA Channel list, where N is the weight of "E" and equals $CDMA\_FREQ\_WEIGHT_S$+1.

- The mobile station shall generate a CDMA band list as follows. Starting with an empty CDMA band list, for each channel in the third CDMA Channel list in the order they appear, the mobile station shall append an entry equal to the band class of that channel, at the end of the CDMA band list.
- The mobile station shall use the hash algorithm specified in 2.6.7.1 and the size of the CDMA band list to compute the band class for its Paging Channel.
- The mobile station shall eliminate those channels which are not in the computed band class from the third CDMA channel list to generate the final CDMA channel list.
- If the final CDMA Channel list is empty, the mobile station shall proceed with the processing of *Extended CDMA Channel List message* and the *CDMA Channel List message*.
- The mobile station shall then use the hash algorithm specified in 2.6.7.1 and the size of the final CDMA channel list to determine the CDMA Channel (Frequency Assignment) for its Paging Channel.

Figure 2.6.2.2.12.1-1 shows an example of the hashing procedure.

If the CDMA Frequency Assignment has changed but the band class is the same (the computed CDMA Channel is different from $CDMACH_S$ but the computed CDMA band class is the same as $CDMABAND_S$), the mobile station shall perform the following actions:

- If the stored configuration parameters is not current (see 2.6.2.2) for the corresponding base station and frequency assignment, the mobile station shall perform the following actions:
  - Set $CDMACH_S$ to the new CDMA Channel.
  - Set $REVCDMACH_S$ to the Reverse CDMA Channel.
  - Set $PAGE\_CHAN_S$ to '1'.
  - Set $PAGECH_S$ to the Primary Paging Channel.

- Set $CONFIG\_MSG\_SEQ_S$, $SYS\_PAR\_MSG\_SEQ_S$, $NGHBR\_LST\_MSG\_SEQ_S$, $CHAN\_LST\_MSG\_SEQ_S$, $EXT\_CHAN\_LST\_MSG\_SEQ_S$, $FD\_CHAN\_LST\_MSG\_SEQ_S$, $EXT\_NGHBR\_LST\_MSG\_SEQ_S$, $GEN\_NGHBR\_LST\_MSG\_SEQ_S$, $EXT\_SYS\_PAR\_MSG\_SEQ_S$, $GLOB\_SERV\_REDIR\_MSG\_SEQ_S$, $EXT\_GLOB\_SERV\_REDIR\_MSG\_SEQ_S$, $USER\_ZONE\_IDMSG\_SEQ_S$, $PRI\_NGHBR\_LST\_MSG\_SEQ_S$, and $ACC\_MSG\_SEQ_S$ to NULL. The mobile station shall keep the parameters associated with the current overhead messages until they are updated on the new Paging Channel[14]
- Tune to the new CDMA Channel.

- Otherwise, the mobile station shall perform the following actions:
  - Set $CDMACH_S$ to the new CDMA Channel.
  - The mobile station shall use the hash algorithm specified in 2.6.7.1 to select a new Paging Channel number in the range 1 to $PAGE\_CHAN_S$, where $PAGE\_CHAN_S$ is the value stored for the Paging Channel whose stored information is current. The mobile station shall store the new Paging Channel number as $PAGECH_S$.
  - Tune to the new CDMA Channel and shall begin monitoring the new Paging Channel.

If the band class has changed (the computed CDMA band class is different than $CDMABAND_S$), the mobile station shall perform the following actions:

- If $BYPASS\_SYS\_DET\_IND_S$ is equal to '0' for this CDMA channel, the mobile station shall perform the following:
  - Set NEW_BAND_RECORD.NEW_BAND_CLASS to the computed band class
  - Set NEW_BAND_RECORD.NEW_FREQ to the computed CDMA Channel
  - The mobile station shall enter the *System Determination Substate* of the *Mobile Station Initialization State* with a new band indication.
- If $BYPASS\_SYS\_DET\_IND_S$ is equal to '1' for this CDMA channel, the mobile station shall perform the following:
  - If the stored configuration parameters is not current (see 2.6.2.2) for the corresponding base station and frequency assignment, the mobile station shall perform the following actions:
    - Set $CDMACH_S$ to the new CDMA Channel.

---

[14] This is primarily needed when hashing to a band with a different coverage footprint than the current band. The current neighbor list is to be used to search for pilots in the hashed-to band. The search priorities are to be adjusted to take into account the hashed-to frequency (e.g., the pilots in the hashed-to frequency should have the highest priority).

+ Set $REVCDMACH_S$ to the Reverse CDMA Channel.
+ Set $CDMABAND_S$ to the new band class.
+ Set $PAGE\_CHAN_S$ to '1'.
+ Set $PAGECH_S$ to the Primary Paging Channel.
+ Set $CONFIG\_MSG\_SEQ_S$, $SYS\_PAR\_MSG\_SEQ_S$, $NGHBR\_LST\_MSG\_SEQ_S$, $CHAN\_LST\_MSG\_SEQ_S$, $EXT\_CHAN\_LST\_MSG\_SEQ_S$, $FD\_CHAN\_LST\_MSG\_SEQ_S$, $EXT\_NGHBR\_LST\_MSG\_SEQ_S$, $GEN\_NGHBR\_LST\_MSG\_SEQ_S$, $EXT\_SYS\_PAR\_MSG\_SEQ_S$, $GLOB\_SERV\_REDIR\_MSG\_SEQ_S$, $EXT\_GLOB\_SERV\_REDIR\_MSG\_SEQ_S$, $USER\_ZONE\_IDMSG\_SEQ_S$, $PRI\_NGHBR\_LST\_MSG\_SEQ_S$, and $ACC\_MSG\_SEQ_S$ to NULL. The mobile station shall keep the parameters associated with the current overhead messages until they are updated on the new Paging Channel[15].
+ Tune to the new CDMA Channel.

– Otherwise, the mobile station shall perform the following actions:
+ Set $CDMACH_S$ to the new CDMA Channel.
+ Set $CDMABAND_S$ to the new band class.
+ The mobile station shall use the hash algorithm specified in 2.6.7.1 to select a new Paging Channel number in the range 1 to $PAGE\_CHAN_S$, where $PAGE\_CHAN_S$ is the value stored for the Paging Channel whose stored information is current. The mobile station shall store the new Paging Channel number as $PAGECH_S$.
+ Tune to the new CDMA Channel and shall begin monitoring the new Paging Channel.

2.6.2.2.23.2 Flex Duplex CDMA Channel List Message on Primary Broadcast Control Channel

To determine the CDMA Channel (Frequency Assignment) for its Primary Broadcast Control Channel, the mobile station shall first select a subset of CDMA channels from the *Flex Duplex CDMA Channel List Message* that will be used for channel hashing. The attributes for channel selection are support for that frequency, the band subclass (if included), RC greater than 2, Quick Paging Channel and transmit diversity. The mobile station shall first select the entire CDMA channel list for channel hashing. Starting from an empty list, the mobile station shall then select the first CDMA Channel list as follows:

[15] This is primarily needed when hashing to a band with a different coverage footprint than the current band. The current neighbor list is to be used to search for pilots in the hashed-to band. The search priorities are to be adjusted to take into account the hashed-to frequency (e.g., the pilots in the hashed-to frequency should have the highest priority).

- For each band class record included in this message, the mobile station shall perform the following:
- If band subclass information is included for this band class record (SUBCLASS_INFO_INCL$_S$ = '1'), the mobile station shall add only those channels belonging to the band class and band subclasses that are supported by both the mobile station and the base station, in the order they appear in the *Flex Duplex CDMA Channel List Message*[16].
- Otherwise (SUBCLASS_INFO_INCL$_S$ = '0' or P_REV_IN_USE$_S$ is less than 11), the mobile station shall add only those channels that it supports for the associated band class, in the order they appear in the *Flex Duplex CDMA Channel List Message*.

- If P_REV_IN_USE$_S$ is greater than or equal to 11, the mobile station shall sort the channels first by the ascending order of band class value as specified in [30], then by the ascending order of CDMA_FREQ within each band class.
- If TD_SEL_INCL$_r$ is equal to '1', the mobile station shall perform the following:
  - If the mobile station is capable of supporting the transmit diversity mode specified by TD_MODE$_S$, the mobile station shall select those CDMA channels that have TD_HASH_IND$_S$ set to '1' from the CDMA channel list for the first CDMA Channel list while preserving the order.
  - If the mobile station is not capable of supporting the transmit diversity mode specified by TD_MODE$_S$, the mobile station shall select those CDMA channels that have TD_HASH_IND$_S$ set to '0' from the CDMA channel list for the first CDMA Channel list while preserving the order.
- If TD_SEL_INCL$_r$ is equal to '0', the mobile station shall select the entire list for the first CDMA Channel list.

From this first CDMA Channel list, the mobile station shall select the second CDMA Channel list as follows:

- If RC_QPCH_SEL_INCL$_r$ is equal to '1' and the mobile station is capable of RC greater than 2 or capable of supporting QPCH, the mobile station shall select those CDMA channels with RC_QPCH_HASH_IND$_S$ set to '1' for the second CDMA Channel list for CDMA channel hashing while preserving the order. If this list is empty, the mobile station shall use the first CDMA Channel list as the second

[16] The mobile station will not discard frequencies as long as they belong to a subclass that is both listed in the message and supported by the mobile station. If the base station does not list any subclass, the mobile station assumes that all subclasses are supported by the base station. The subclass to frequency mapping is not provided in the *Extended CDMA Channel List Message*; the mobile station needs to refer to [45] to find the mapping.

CDMA Channel list for CDMA channel hashing.

- Otherwise, the mobile station shall use the first CDMA Channel list as the second CDMA Channel list for CDMA channel hashing.

From this second CDMA Channel list, the mobile station shall select the third CDMA Channel listsubset as follows:

- If $CDMA\_FREQ\_WEIGHT\_INCL_r$ is equal to '0', the mobile station shall set the third CDMA Channel list to be equal to the second CDMA Channel list
- If $CDMA\_FREQ\_WEIGHT\_INCL_r$ is equal to '1', starting with an empty third CDMA Channel list, for each entry "E" in the second CDMA Channel list in the order they appear, the mobile station shall append N consecutive entries "E" at the end of the third CDMA Channel, where N is the weight of "E" and equals $CDMA\_FREQ\_WEIGHT_s$+1.

The mobile station shall determine the band class for its Primary Broadcast Control Channel as follows:

- The mobile station shall generate a CDMA band list as follows. Starting with an empty CDMA band list, for each channel in the third CDMA Channel list in the order they appear, the mobile station shall append an entry equal to the band class of that channel, at the end of the CDMA band list
- The mobile station shall use the hash algorithm specified in 2.6.7.1 and the size of the CDMA band list to compute the band class for its Primary Broadcast Control Channel.

After the band class has been selected, the mobile station shall determine the CDMA Channel (Frequency Assignment) for its Primary Broadcast Control Channel as follows:

- The mobile station shall eliminate those channels which are not in the computed band class from the third CDMA Channel list to generate the final CDMA Channel list.
- If the final CDMA Channel list is empty, the mobile station shall proceed with the processing of the *Extended CDMA Channel List message*.
- The mobile station shall then use the hash algorithm specified in 2.6.7.1 with the number of channels in the final CDMA Channel list to determine the CDMA Channel (Frequency Assignment) for its Primary Broadcast Control Channel.

If the CDMA Frequency Assignment has changed but the band class is the same (the computed CDMA Channel is different from $CDMACH_s$ but the computed CDMA band class is $CDMABAND_s$), the mobile station shall perform the following:

- Set $CDMACH_s$ to the new CDMA Channel.
- Set $REVCDMACH_s$ to the new Reverse CDMA Channel.

- Set $CONFIG\_MSG\_SEQ_S$, $A41\_SYS\_PAR\_MSG\_SEQ_S$, $MC\_RR\_PAR\_MSG\_SEQ_S$, $UNI\_NGHBR\_LST\_MSG\_SEQ_S$, $EXT\_CHAN\_LST\_MSG\_SEQ_S$, $FD\_CHAN\_LST\_MSG\_SEQ_S$, $USER\_ZONE\_ID\_MSG\_SEQ_S$, and $PRI\_NGHBR\_LST\_MSG\_SEQ_S$ and $ACC\_MSG\_SEQ_S$ to NULL. The mobile station shall keep the parameters associated with the current overhead messages until they are updated on the new Primary Broadcast Control Channel[17].
- If the mobile station is operating in the Spreading Rate 1:
  - If the assigned CDMA channel supports transmit diversity, the mobile station shall set the following fields corresponding to the assigned CDMA channel:
    - $SR1\_TD\_POWER\_LEVEL_S = TD\_POWER\_LEVEL_r$.
    - $SR1\_TD\_MODE_S = TD\_MODE_r$.
    - $BRAT_S = SR1\_BRAT\_TD_S$.
    - $BCCH\_CODE\_RATE_S = SR1\_CRAT\_TD_S$.
    - $BCCH_S = BCCH\_CODE\_CHAN\_TD_S$.
  - Otherwise, the mobile station shall set the following fields corresponding to the assigned CDMA channel:
    - $BRAT_S = SR1\_BRAT\_NON\_TD_S$,
    - $BCCH\_CODE\_RATE_S = SR1\_CRAT\_NON\_TD_S$,
    - $BCCH_S = BCCH\_CODE\_CHAN\_NON\_TD_S$,
- Tune to the new CDMA Channel

If the band class has changed (the computed CDMA band class is different than $CDMABAND_S$), the mobile station shall perform the following actions:

- If $BYPASS\_SYS\_DET\_IND_S$ is equal to '0' for this CDMA channel, the mobile station shall perform the following:
  - Set NEW_BAND_RECORD.NEW_BAND_CLASS to the computed band class.
  - Set NEW_BAND_RECORD.NEW_FREQ to the computed CDMA Channel.
  - The mobile station shall enter the *System Determination Substate* of the *Mobile Station Initialization State* with a new band indication.
- If $BYPASS\_SYS\_DET\_IND_S$ is equal to '1' for this CDMA channel, the mobile station shall perform the following:
  - Set $CDMACH_S$ to the new CDMA Channel.

---

[17] This is primarily needed when hashing to a band with a different coverage footprint than the current band. The current neighbor list is to be used to search for pilots in the hashed-to band. The search priorities are to be adjusted to take into account the hashed-to frequency (e.g., the pilots in the hashed-to frequency should have the highest priority).

- Set $REVCDMACH_S$ to the new Reverse CDMA Channel.
- Set $CDMABAND_S$ to the new band class.
- Set $CONFIG\_MSG\_SEQ_S$, $A41\_SYS\_PAR\_MSG\_SEQ_S$, $MC\_RR\_PAR\_MSG\_SEQ_S$, $UNI\_NGHBR\_LST\_MSG\_SEQ_S$, $EXT\_CHAN\_LST\_MSG\_SEQ_S$, $FD\_CHAN\_LST\_MSG\_SEQ_S$, $USER\_ZONE\_ID\_MSG\_SEQ_S$, and $PRI\_NGHBR\_LST\_MSG\_SEQ_S$ and $ACC\_MSG\_SEQ_S$ to NULL. The mobile station shall keep the parameters associated with the current overhead messages until they are updated on the new Primary Broadcast Control Channel[18].
- If the mobile station is operating in the Spreading Rate 1:
  - If the assigned CDMA channel supports transmit diversity, the mobile station shall set the following fields corresponding to the assigned CDMA channel:
    - $SR1\_TD\_POWER\_LEVEL_S = TD\_POWER\_LEVEL_r$.
    - $SR1\_TD\_MODE_S = TD\_MODE_r$.
    - $BRAT_S = SR1\_BRAT\_TD_S$.
    - $BCCH\_CODE\_RATE_S = SR1\_CRAT\_TD_S$.
    - $BCCH_S = BCCH\_CODE\_CHAN\_TD_S$.
- Otherwise, the mobile station shall set the following fields corresponding to the assigned CDMA channel:
  - $BRAT_S = SR1\_BRAT\_NON\_TD_S$,
  - $BCCH\_CODE\_RATE_S = SR1\_CRAT\_NON\_TD_S$,
  - $BCCH_S = BCCH\_CODE\_CHAN\_NON\_TD_S$,
- Tune to the new CDMA Channel

2.6.2.2.24 Alternative Technologies Information Message

Whenever a *Alternative Technologies Information Message* is received on the Paging Channel or the Primary Broadcast Control Channel, the configuration message sequence number, $CONFIG\_MSG\_SEQ_r$, shall be compared to that stored in $ATIM\_MSG\_SEQ_S$. If the comparison results in a match, the mobile station may ignore the message. If the comparison results in a mismatch, then the mobile station shall process the remaining fields in the message as follows.

---

[18] This is primarily needed when hashing to a band with a different coverage footprint than the current band. The current neighbor list is to be used to search for pilots in the hashed-to band. The search priorities are to be adjusted to take into account the hashed-to frequency (e.g., the pilots in the hashed-to frequency should have the highest priority).

The mobile station shall store the following parameters:

- Configuration message sequence number

  ($CONFIG\_MSG\_SEQ_s = CONFIG\_MSG\_SEQ_r$,

  $ATIM\_MSG\_SEQ_s = CONFIG\_MSG\_SEQ_r$)

The mobile station shall store all the Radio Interface records contained in the *Alternative Technologies Information Message*.

2.6.2.3 Mobile Station Page Match Operation

The *Mobile Station Page Match Operation* is performed whenever the mobile station receives a mobile-station-addressed page or a broadcast page. If the mobile station receives a mobile-station-addressed page that contains the IMSI or TMSI assigned to the mobile station (see [4]) on the Paging Channel, the mobile station transmits a *Page Response Message* on the Access Channel. If the mobile station receives a mobile-station-addressed page that contains the IMSI or TMSI assigned to the mobile station (see [4]) on the Forward Common Control Channel, the mobile station transmits a *Page Response Message* on the r-csch. If the mobile station is configured to receive broadcast messages and it receives a *General Page Message* that contains a burst type and broadcast address that the mobile station has been configured to receive (see [4]) on the Paging Channel, the mobile station performs the broadcast page procedures as described in 2.6.2.1.1.3.4. If the mobile station is configured to receive broadcast messages and it receives a *General Page Message* or a *Universal Page Message* that contains a burst type and broadcast address that the mobile station has been configured to receive (see [4]) on the Forward Common Control Channel, the mobile station performs the enhanced broadcast page procedures as described in 2.6.2.1.1.3.6.

When the mobile station receives a page message, it shall compare the configuration message sequence number, $CONFIG\_MSG\_SEQ_r$, to $CONFIG\_MSG\_SEQ_s$. If the comparison results in a mismatch, then the mobile station shall set $CONFIG\_MSG\_SEQ_s$ to $CONFIG\_MSG\_SEQ_r$. The mobile station shall also compare the *Access Parameters Message* or the *Enhanced Access Parameters Message* sequence number, $ACC\_MSG\_SEQ_r$, with that stored in $ACC\_MSG\_SEQ_s$. If the comparison results in a mismatch, then the mobile station shall set $ACC\_MSG\_SEQ_s$ to NULL (see 2.6.2.2). The mobile station shall set CURR_ACC_MSG_SEQ to $ACC\_MSG\_SEQ_s$.

The mobile station shall process each record for which it declares a page match (see [4]).

If the mobile station receives a broadcast page that contains a burst type and broadcast address that the mobile station has been configured to receive on the Paging Channel, the mobile station should perform the broadcast page procedures described in 2.6.2.1.1.3.4. If the mobile station receives a broadcast page that contains a burst type and broadcast address that the mobile station has been configured to receive on the Forward Common Control Channel, the mobile station should perform the enhanced broadcast page procedures as described in 2.6.2.1.1.3.6.

If a page match is declared, the mobile station shall perform the following:

- The mobile station shall enter the *Update Overhead Information Substate* of the *System Access State* (see 2.6.3.2) with a page response indication within T_{33m} seconds after the page message is received.

If a page match is declared and the mobile station determines that it should be monitoring a neighboring base station, the mobile station may perform an access entry handoff to the neighboring base station, if all of the following conditions hold:

- The neighboring base station is listed in NGHBR_REC.
- The ACCESS_ENTRY_HO field of the NGHBR_REC corresponding to the neighboring base station is equal to '1'.
- If the mobile station performs an access entry handoff on the Access Channel, none of $CONFIG\_MSG\_SEQ_S$, $SYS\_PAR\_MSG\_SEQ_S$, $NGHBR\_LST\_MSG\_SEQ_S$, $EXT\_NGHBR\_LST\_MSG\_SEQ_S$, $GEN\_NGHBR\_LST\_MSG\_SEQ_S$, $CHAN\_LST\_MSG\_SEQ_S$, $EXT\_SYS\_PAR\_MSG\_SEQ_S$, $EXT\_CHAN\_LST\_MSG\_SEQ_S$, $FD\_CHAN\_LST\_MSG\_SEQ_S$, $USER\_ZONE\_ID\_MSG\_SEQ_S$, and $PRI\_NGHBR\_LST\_MSG\_SEQ_S$ are equal to NULL.
- If the mobile station performs an access entry handoff on the Enhanced Access Channel, none of $CONFIG\_MSG\_SEQ_S$, $A41\_SYS\_PAR\_MSG\_SEQ_S$, $MC\_RR\_PAR\_MSG\_SEQ_S$, $UNI\_NGHBR\_LST\_MSG\_SEQ_S$, $EXT\_CHAN\_LST\_MSG\_SEQ_S$, $FD\_CHAN\_LST\_MSG\_SEQ_S$, $USER\_ZONE\_ID\_MSG\_SEQ_S$, and $PRI\_NGHBR\_LST\_MSG\_SEQ_S$ are equal to NULL.

Otherwise, the mobile station shall not perform an access entry handoff to the neighboring base station.

The mobile station need not perform an access entry handoff to a base station operating on another frequency.

If the mobile station performs an access entry handoff, it shall follow the procedures specified in 2.6.2.1.4.2 and shall perform the access entry handoff before entering the *Update Overhead Information Substate* of the *System Access State* (see 2.6.3.2).

If PACA is enabled, and if the mobile station performs an access entry handoff, the mobile station shall respond to the mobile-station-addressed page first and shall then re-originate the PACA call on the new base station.

2.6.2.4 Mobile Station Order and Message Processing Operation

During the *Mobile Station Order and Message Processing Operation*, the mobile station processes all messages except overhead messages (see 2.6.2.2) and page messages (see 2.6.2.3).

The mobile station shall set CURR_ACC_MSG_SEQ to NULL.

The mobile station shall perform address matching as described in [4].

If Layer 3 receives a message that requires acknowledgment, the mobile station shall enter the *Update Overhead Information Substate* of the *System Access State* with an order/message response indication within T_{33m} seconds, unless otherwise specified for a particular message.

If Layer 3 receives a message that does not require acknowledgment, the mobile station shall transmit a response only if it is required by the message or order. If a response is required, the mobile station shall enter the *Update Overhead Information Substate* of the *System Access State* with an order/message response indication within T_{33m} seconds, unless otherwise specified for a particular message.

If the mobile station is to enter the *Update Overhead Information Substate* of the *System Access State* with an order/message response indication and the mobile station determines that it should be monitoring a neighboring base station, the mobile station may perform an access entry handoff to the neighboring base station, if all of the following conditions hold:

- The neighboring base station is listed in NGHBR_REC.
- The ACCESS_ENTRY_HO field of the NGHBR_REC corresponding to the neighboring base station is equal to '1'.
- $ACC\_ENT\_HO\_ORDER_S$ is equal to '1'.
- If the mobile station performs an access entry handoff on the Access Channel, none of $CONFIG\_MSG\_SEQ_S$, $SYS\_PAR\_MSG\_SEQ_S$, $NGHBR\_LST\_MSG\_SEQ_S$, $EXT\_NGHBR\_LST\_MSG\_SEQ_S$, $GEN\_NGHBR\_LST\_MSG\_SEQ_S$, $CHAN\_LST\_MSG\_SEQ_S$, $EXT\_CHAN\_LST\_MSG\_SEQ_S$, $FD\_CHAN\_LST\_MSG\_SEQ_S$, $USER\_ZONE\_ID\_MSG\_SEQ_S$, $PRI\_NGHBR\_LST\_MSG\_SEQ_S$, and $EXT\_SYS\_PAR\_MSG\_SEQ_S$ are equal to NULL.
- If the mobile station performs an access entry handoff on the Enhanced Access Channel, none of $CONFIG\_MSG\_SEQ_S$, $A41\_SYS\_PAR\_MSG\_SEQ_S$, $MC\_RR\_PAR\_MSG\_SEQ_S$, $UNI\_NGHBR\_LST\_MSG\_SEQ_S$, $EXT\_CHAN\_LST\_MSG\_SEQ_S$, $FD\_CHAN\_LST\_MSG\_SEQ_S$, $USER\_ZONE\_ID\_MSG\_SEQ_S$, and $PRI\_NGHBR\_LST\_MSG\_SEQ_S$ are equal to NULL.

Otherwise, the mobile station shall not perform an access entry handoff to the neighboring base station.

The mobile station need not perform an access entry handoff to a base station operating on another frequency.

If the mobile station performs an access entry handoff, it shall follow the procedures specified in 2.6.2.1.4.2 and shall perform the access entry handoff before entering the *Update Overhead Information Substate* of the *System Access State* (see 2.6.3.2). If PACA is enabled and the mobile station performs an access entry handoff, the mobile station shall respond to the order/message first and then re-originate the PACA call in the new base station.

The following directed messages and orders can be received. If any field value of the message or order is outside its permissible range, the mobile station shall send a *Mobile Station Reject Order* with ORDQ equal to '00000100' (message field not in valid range).

1. *Abbreviated Alert Order:* The mobile station may alert the user.
2. *Audit Order*

3. *Authentication Challenge Message:* The mobile station shall process the message and shall respond with an *Authentication Challenge Response Message* as specified in 2.3.12.1.4, regardless of the value of $AUTH_s$. The mobile station shall enter the *Update Overhead Information Substate* of the *System Access State* with an order/message response indication within T_{32m} seconds.

4. *Authentication Request Message:* The mobile station shall process the message and shall respond as specified in 2.3.12.5.2. The mobile station shall enter the *Update Overhead Information Substate* of the *System Access State* with an order/message response indication within T_{32m} seconds.

5. *Base Station Challenge Confirmation Order:* The mobile station shall process the message and shall respond with an *SSD Update Confirmation Order* or *SSD Update Rejection Order* as specified in 2.3.12.1.5. The mobile station shall enter the *Update Overhead Information Substate* of the *System Access State* with an order/message response indication within T_{32m} seconds.

6. *Base Station Reject Order:* The mobile station shall perform the procedures as specified in 2.6.11.5.

7. *Channel Assignment Message:* The mobile station shall process the message as follows:

   - If $ASSIGN\_MODE_r$ equals '001', the mobile station shall perform the following actions:

     - If the message requires acknowledgment, the mobile station shall wait until Layer 3 receives an indication from Layer 2 that the acknowledgment to the message has been sent and acknowledged.

     - If a CDMA channel (CDMA_FREQ) is specified in the assignment, the mobile station shall set $CDMACH_s$ = $CDMA\_FREQ_r$, tune to the new Frequency Assignment, and measure the strength of each pilot listed in the assignment using the Neighbor Set search procedures specified in 2.6.6.2.1 and 2.6.6.2.2.

     - The mobile station shall set $CONFIG\_MSG\_SEQ_s$ and $ACC\_MSG\_SEQ_s$ to NULL (see 2.6.2.2) and shall set $PILOT\_PN_s$ to the pilot PN sequence offset of the strongest pilot in the list ($PILOT\_PN_r$).

- If the mobile station has not stored configuration parameters for the Primary Paging Channel of the new base station, or if the stored information is not current (see 2.6.2.2), the mobile station shall set $SYS\_PAR\_MSG\_SEQ_s$, $NGHBR\_LST\_MSG\_SEQ_s$, $EXT\_NGHBR\_LST\_MSG\_SEQ_s$, $GEN\_NGHBR\_LST\_MSG\_SEQ_s$, $CHAN\_LST\_MSG\_SEQ_s$, $EXT\_CHAN\_LST\_MSG\_SEQ_s$, $FD\_CHAN\_LST\_MSG\_SEQ_s$, $EXT\_SYS\_PAR\_MSG\_SEQ_s$, $USER\_ZONE\_ID\_MSG\_SEQ_s$, $PRI\_NGHBR\_LST\_MSG\_SEQ_s$, $GLOB\_SERV\_REDIR\_MSG\_SEQ_s$, and $EXT\_GLOB\_SERV\_REDIR\_MSG\_SEQ_s$ to NULL. The mobile station shall set $PAGE\_CHAN_s$ to '1' and $PAGECH_s$ to the Primary Paging Channel. The mobile station shall then begin monitoring the Primary Paging Channel of the selected base station.

- If $ASSIGN\_MODE_r$ equals '101' and $FREQ\_INCL_r$ equals '0', the mobile station shall perform the following actions:
  - If the message requires acknowledgment, the mobile station shall wait until Layer 3 receives an indication from Layer 2 that the acknowledgment to the message has been sent and acknowledged.
  - The mobile station shall measure the strength of each pilot listed in the assignment using the Neighbor Set search procedures specified in 2.6.6.2.1 and 2.6.6.2.2, set $PILOT\_PN_s$ to the pilot PN sequence offset of the strongest pilot in the list ($PILOT\_PN_r$), and set $CONFIG\_MSG\_SEQ_s$ and $ACC\_MSG\_SEQ_s$ to NULL (see 2.6.2.2).
  - If the mobile station has not stored configuration parameters for the Primary Paging Channel of the new base station, or if the stored information is not current (see 2.6.2.2), the mobile station shall set $SYS\_PAR\_MSG\_SEQ_s$, $NGHBR\_LST\_MSG\_SEQ_s$, $EXT\_NGHBR\_LST\_MSG\_SEQ_s$, $GEN\_NGHBR\_LST\_MSG\_SEQ_s$, $CHAN\_LST\_MSG\_SEQ_s$, $EXT\_CHAN\_LST\_MSG\_SEQ_s$, $FD\_CHAN\_LST\_MSG\_SEQ_s$, $EXT\_SYS\_PAR\_MSG\_SEQ_s$, $USER\_ZONE\_ID\_MSG\_SEQ_s$, $PRI\_NGHBR\_LST\_MSG\_SEQ_s$, $GLOB\_SERV\_REDIR\_MSG\_SEQ_s$, and $EXT\_GLOB\_SERV\_REDIR\_MSG\_SEQ_s$ to NULL. The mobile station shall set $PAGE\_CHAN_s$ to '1' and $PAGECH_s$ to the Primary Paging Channel. The mobile station shall then begin monitoring the Primary Paging Channel of the selected base station.
- If $ASSIGN\_MODE_r$ equals '101', $FREQ\_INCL_r$ equals '1', and the band class is not supported by the mobile station, the mobile station shall enter the *Update Overhead Information Substate* of the *System Access State* with an order/message response indication within T_{33m} seconds and send a *Mobile Station Reject Order* with ORDQ field set to '00000110' (capability not supported by the mobile station).
- If $ASSIGN\_MODE_r$ equals '101', $FREQ\_INCL_r$ equals '1', and the band class is supported by the mobile station, the mobile station shall perform the following actions:

- If the message requires acknowledgment, the mobile station shall wait until Layer 3 receives an indication from Layer 2 that the acknowledgment to the message has been sent and acknowledged.
- The mobile station shall set $CDMACH_s$ = $CDMA\_FREQ_r$ and $CDMABAND_s$ = $BAND\_CLASS_r$. Then the mobile station shall tune to the new Frequency Assignment, measure the strength of each pilot listed in the assignment using the Neighbor Set search procedures specified in 2.6.6.2.1 and 2.6.6.2.2, set $PILOT\_PN_s$ to the pilot PN sequence offset of the strongest pilot in the list ($PILOT\_PN_r$), and set $CONFIG\_MSG\_SEQ_s$ and $ACC\_MSG\_SEQ_s$ to NULL (see 2.6.2.2).
- If the mobile station has not stored configuration parameters for the Primary Paging Channel of the new base station, or if the stored information is not current (see 2.6.2.2), the mobile station shall set $SYS\_PAR\_MSG\_SEQ_s$, $NGHBR\_LST\_MSG\_SEQ_s$, $EXT\_NGHBR\_LST\_MSG\_SEQ_s$, $GEN\_NGHBR\_LST\_MSG\_SEQ_s$, $CHAN\_LST\_MSG\_SEQ_s$, $EXT\_CHAN\_LST\_MSG\_SEQ_s$, $FD\_CHAN\_LST\_MSG\_SEQ_s$, $EXT\_SYS\_PAR\_MSG\_SEQ_s$, $USER\_ZONE\_ID\_MSG\_SEQ_s$, $PRI\_NGHBR\_LST\_MSG\_SEQ_s$, $GLOB\_SERV\_REDIR\_MSG\_SEQ_s$, and $EXT\_GLOB\_SERV\_REDIR\_MSG\_SEQ_s$ to NULL. The mobile station shall set $PAGE\_CHAN_s$ to '1' and $PAGECH_s$ to the Primary Paging Channel. The mobile station shall then begin monitoring the Primary Paging Channel of the selected base station.

- If $ASSIGN\_MODE_r$ is not equal to '001' or '101', the mobile station shall enter the *Update Overhead Information Substate* of the *System Access State* with an order/message response indication within T_{33m} seconds and send a *Mobile Station Reject Order* with ORDQ field set to '00000010' (message not accepted in this state).

8. *Data Burst Message*

9. *Extended Channel Assignment Message:* The mobile station shall process the message as follows:

- If $ASSIGN\_MODE_r$ equals '001', $FREQ\_INCL_r$ equals '0', the mobile station shall perform the following actions:
  - If the message requires acknowledgment, the mobile station shall wait until Layer 3 receives an indication from Layer 2 that the acknowledgment to the message has been sent and acknowledged.
  - The mobile station shall measure the strength of each pilot listed in the assignment using the Neighbor Set search procedures specified in 2.6.6.2.1 and 2.6.6.2.2 set $PILOT\_PN_s$ to the pilot PN sequence offset of the strongest pilot in the list ($PILOT\_PN_r$), and set $CONFIG\_MSG\_SEQ_s$ and $ACC\_MSG\_SEQ_s$ to NULL (see 2.6.2.2).

- If the mobile station has not stored configuration parameters for the Primary Paging Channel of the new base station, or if the stored information is not current (see 2.6.2.2), the mobile station shall set $SYS\_PAR\_MSG\_SEQ_s$, $NGHBR\_LST\_MSG\_SEQ_s$, $EXT\_NGHBR\_LST\_MSG\_SEQ_s$, $GEN\_NGHBR\_LST\_MSG\_SEQ_s$, $CHAN\_LST\_MSG\_SEQ_s$, $EXT\_CHAN\_LST\_MSG\_SEQ_s$, $FD\_CHAN\_LST\_MSG\_SEQ_s$, $EXT\_SYS\_PAR\_MSG\_SEQ_s$, $USER\_ZONE\_ID\_MSG\_SEQ_s$, $PRI\_NGHBR\_LST\_MSG\_SEQ_s$, $GLOB\_SERV\_REDIR\_MSG\_SEQ_s$, and $EXT\_GLOB\_SERV\_REDIR\_MSG\_SEQ_s$ to NULL. The mobile station shall set $PAGE\_CHAN_s$ to '1' and $PAGECH_s$ to the Primary Paging Channel. If the mobile station was monitoring Forward Common Control Channel, the mobile station shall set the $PRAT_s$ to '00'. The mobile station shall then begin monitoring the Primary Paging Channel of the selected base station.

- If $ASSIGN\_MODE_r$ equals '001', $FREQ\_INCL_r$ equals '1', and the band class is not supported by the mobile station, the mobile station shall enter the *Update Overhead Information Substate* of the *System Access State* with an order/message response indication within T_{33m} seconds and send a *Mobile Station Reject Order* with ORDQ field set to '00000110' (capability not supported by the mobile station).

- If $ASSIGN\_MODE_r$ equals '001', $FREQ\_INCL_r$ equals '1', and the band class is supported by the mobile station, the mobile station shall perform the following actions:

  - If the message requires acknowledgment, the mobile station shall wait until Layer 3 receives an indication from Layer 2 that the acknowledgment to the message has been sent and acknowledged.

  - The mobile station shall set $CDMACH_s = CDMA\_FREQ_r$ and $CDMABAND_s = BAND\_CLASS_r$. The mobile station shall set $CONFIG\_MSG\_SEQ_s$ and $ACC\_MSG\_SEQ_s$ to NULL (see 2.6.2.2). Then the mobile station shall tune to the new Frequency Assignment, measure the strength of each pilot listed in the assignment using the Neighbor Set search procedures specified in 2.6.6.2.1 and 2.6.6.2.2, and set $PILOT\_PN_s$ to the pilot PN sequence offset of the strongest pilot in the list ($PILOT\_PN_r$).

- If the mobile station has not stored configuration parameters for the Primary Paging Channel of the new base station, or if the stored information is not current (see 2.6.2.2), the mobile station shall set $SYS\_PAR\_MSG\_SEQ_s$, $NGHBR\_LST\_MSG\_SEQ_s$, $EXT\_NGHBR\_LST\_MSG\_SEQ_s$, $GEN\_NGHBR\_LST\_MSG\_SEQ_s$, $CHAN\_LST\_MSG\_SEQ_s$, $EXT\_CHAN\_LST\_MSG\_SEQ_s$, $FD\_CHAN\_LST\_MSG\_SEQ_s$, $EXT\_SYS\_PAR\_MSG\_SEQ_s$, $USER\_ZONE\_ID\_MSG\_SEQ_s$, $PRI\_NGHBR\_LST\_MSG\_SEQ_s$, $GLOB\_SERV\_REDIR\_MSG\_SEQ_s$, and $EXT\_GLOB\_SERV\_REDIR\_MSG\_SEQ_s$ to NULL. The mobile station shall set $PAGE\_CHAN_s$ to '1' and $PAGECH_s$ to the Primary Paging Channel. If the mobile station was monitoring Forward Common Control Channel, the mobile station shall set the $PRAT_s$ to '00'. The mobile station shall then begin monitoring the Primary Paging Channel of the selected base station.

- If $ASSIGN\_MODE_r$ equals '100' or '101', the mobile station shall perform the following actions:
  - If $DIRECT\_CH\_ASSIGN\_IND_r$ is included and is set to '1', the mobile station shall process the message as defined below in the order specified:
    + The mobile station shall set $CONFIG\_MSG\_SEQ_s$ to $CONFIG\_MSG\_SEQ_r$.
    + If $RESPOND\_IND_r$ is equal to '1', the mobile station shall process the message as specified in section 2.6.3.3[19]; otherwise, the mobile station shall enter the *Update Overhead Information Substate* of the *System Access State* with a direct channel assignment update overhead indication within T_{33m} seconds.
  - Otherwise, the mobile station shall enter the *Update Overhead Information Substate* of the *System Access State* with an order/message response indication within T_{33m} seconds and send a *Mobile Station Reject Order* with ORDQ field set to '00000010' (message not accepted in this state).
- If $ASSIGN\_MODE_r$ is not equal to '001', '100' or '101', the mobile station shall enter the *Update Overhead Information Substate* of the *System Access State* with an order/message response indication within T_{33m} seconds and send a *Mobile Station Reject Order* with ORDQ field set to '00000010' (message not accepted in this state).

10. *Feature Notification Message*

11. *Local Control Order*

12. *Lock Until Power-Cycled Order:* The mobile station shall record the reason for the

---

[19] The mobile station processes the message as defined in section 2.6.3.3, but no requirements other than the *Extended Channel Assignment Message* processing requirements in section 2.6.3.3 are applicable.

Lock Until Power-Cycled Order in the mobile station's semi-permanent memory ($LCKRSN\_P_{s-p}$ equals the least significant four bits of $ORDQ_r$). After a mobile station receives this order, it shall not enter the *System Access State* (see 2.6.3) until it has received an *Unlock Order* or until after power-cycling the mobile station (i.e., after the next mobile station power-up). This requirement shall take precedence over any other mobile station requirement specifying entry to the *System Access State*. The mobile station should notify the user of the locked condition. The mobile station shall exit the *Mobile Station Idle State* and enter the *System Determination Substate* of the *Mobile Station Initialization State* with a lock indication (see 2.6.1.1). This allows the mobile station to operate in an alternate operating mode while locked.

13. *Maintenance Required Order:* The mobile station shall record the reason for the *Maintenance Required Order* in the mobile station's semi-permanent memory ($MAINTRSN_{s-p}$ equals the least significant four bits of $ORDQ_r$). If the mobile station has previously received a *Lock Until Power-Cycled Order*, it shall remain in the locked condition; otherwise the mobile station shall remain in the unlocked condition. The mobile station should notify the user of the maintenance required condition.

14. *PACA Message:* If $P\_REV\_IN\_USE_s$ is less than or equal to four, and if the mobile station does not support PACA capability, the mobile station shall send a *Mobile Station Reject Order* with the ORDQ field set to '00000110' (message requires a capability that is not supported by the mobile station); otherwise, the mobile station shall process the message as follows:

- If $PACA_s$ is equal to disabled, the mobile station shall enter the *Update Overhead Information Substate* of the *System Access State* with an order/message response indication within T_{33m} seconds and shall send a *Mobile Station Reject Order* with the ORDQ field set to '00000010' (message not accepted in this state).
- If $PACA_s$ is equal to enabled, the mobile station shall perform the following:
  - If the purpose of the message is to respond to an *Origination Message* ($PURPOSE_r$ is equal to '0000'), the mobile station shall enter the *Update Overhead Information Substate* of the *System Access State* with an order/message response indication within T_{33m} seconds and send a *Mobile Station Reject Order* with the ORDQ field set to '00000010' (message not accepted in this state).
  - If the purpose of the message is to provide the queue position of the PACA call ($PURPOSE_r$ is equal to '0001'), the mobile station shall set the PACA state timer to the duration shown in Table 3.7.2.3.2.20-2, corresponding to the value of $PACA\_TIMEOUT_s$, should indicate to the user that the PACA call is still queued, and should indicate the current queue position (Q_POS_r) of the call.

– If the purpose of the message is to instruct the mobile station to re-originate the PACA call ($PURPOSE_r$ is equal to '0010'), the mobile station shall set the PACA state timer to the duration shown in Table 3.7.2.3.2.20-2 corresponding to the value of $PACA\_TIMEOUT_s$, and the mobile station shall enter the *Update Overhead Information Substate* of the *System Access State* (see 2.6.3) with a PACA response indication within T_{33m} seconds to re-originate the PACA call.

– If the purpose of the message is to cancel the PACA call ($PURPOSE_r$ is equal to '0011'), the mobile station shall set $PACA_s$ to disabled and PACA_CANCEL to '0', shall disable the PACA state timer, and should indicate to the user that the PACA call has been canceled.

15. *Registration Accepted Order:* The mobile station shall perform the procedures as specified in 2.6.11.1.

16. *Registration Rejected Order:* This order indicates that normal service is not available on this system. The mobile station shall disable the full-TMSI timer. If the received order specifies to delete the TMSI (ORDQ = '00000100'), the mobile station shall set all the bits of the $TMSI\_CODE_{s-p}$ to '1'. The mobile station shall enter the *System Determination Substate* of the *Mobile Station Initialization State* with a registration rejected indication (see 2.6.1.1).

17. *Registration Request Order:* The mobile station shall process the message and perform registration procedures as specified in 2.6.5.5.2.3.

18. *Security Mode Command Message:* The mobile station shall perform the procedures as specified in 2.6.11.4.

19. *Service Redirection Message:* The mobile station shall process the message as follows:

- If the mobile station is directed to an unsupported operation mode or band class, the mobile station shall respond with a *Mobile Station Reject Order* with ORDQ equal to '00000110' (message requires a capability that is not supported by the mobile station).
- If $DELETE\_TMSI_r$ is equal to '1', the mobile station shall set all the bits of $TMSI\_CODE_{s-p}$ to '1'. The mobile station shall disable the full-TMSI timer.
- The mobile station shall set $RETURN\_IF\_FAIL_s = RETURN\_IF\_FAIL_r$.
- If $RECORD\_TYPE_r$ is equal to '00000000', the mobile station shall enter the *System Determination Substate* of the *Mobile Station Initialization State* with an NDSS off indication (see 2.6.1.1); otherwise, the mobile station shall store the redirection record received in the message as $REDIRECT\_REC_s$ and shall enter the *System Determination Substate* of the *Mobile Station Initialization State* with a redirection indication (see 2.6.1.1).

20. *Retry Order:* The mobile station shall process the message as follows:

- If $RETRY\_TYPE_r$ is equal to '000', the mobile station shall set $RETRY\_DELAY_s$[RETRY_TYPE] to 0, where RETRY_TYPE is equal to '001', '010', '011', '100', or '101'.
- If $RETRY\_TYPE_r$ is equal to '001', , '100', or '101', the mobile station shall perform the following:
  - If $RETRY\_DELAY_r$ is equal to '00000000', then the mobile station shall set $RETRY\_DELAY_s$[$RETRY\_TYPE_r$] to 0.
  - If $RETRY\_DELAY_r$ is not equal to '00000000', the mobile station shall set $RETRY\_DELAY_s$[$RETRY\_TYPE_r$] as follows:
    + If the most significant bit of the $RETRY\_DELAY_r$ is '0', set $RETRY\_DELAY\_UNIT_s$ to 1000ms. If the most significant bit of the $RETRY\_DELAY_r$ is '1', set $RETRY\_DELAY\_UNIT_s$ to 60000ms.
    + The mobile station shall set $RETRY\_DELAY\_VALUE_s$ to the seven least significant bits of $RETRY\_DELAY_r$.
    + The mobile station shall store the next system time 80 ms boundary + $RETRY\_DELAY\_VALUE_s \times RETRY\_DELAY\_UNIT_s$ ms as $RETRY\_DELAY_s$[$RETRY\_TYPE_r$].

21. *Slotted Mode Order*: After receiving this order, the mobile station shall set $SLOTTED_s$ to YES. The mobile station shall disable the $T_{MS\_Slotted}$ timer.

22. *SSD Update Message:* The mobile station shall process the message and shall respond with a *Base Station Challenge Order* as specified in 2.3.12.1.5. The mobile station shall enter the *Update Overhead Information Substate* of the *System Access State* with an order/message response indication within T_{32m} seconds.

23. *Status Request Message:* The mobile station shall process the message. If $P\_REV\_IN\_USE_s$ is less than or equal to three, the mobile station shall respond with a *Status Response Message*. If $P\_REV\_IN\_USE_s$ is greater than three, the mobile station shall respond with an *Extended Status Response Message*. The mobile station shall enter the *Update Overhead Information Substate* of the *System Access State* with an order/message response indication within T_{33m} seconds. If the message does not specify any qualification information ($QUAL\_INFO\_TYPE_r$ is equal to '00000000'), the mobile station shall include the requested information records in the response. If the message specifies a band class ($QUAL\_INFO\_TYPE_r$ is equal to '00000001'), the mobile station shall only include the requested information records for the specified band class ($BAND\_CLASS_r$) in the response. If the message specifies a band class and an operating mode ($QUAL\_INFO\_TYPE_r$ is equal to '00000010'), the mobile station shall only include the requested information records for the specified band class ($BAND\_CLASS_r$) and operating mode (OP_MODE_r) in the response. If the message specifies a band class or a band class and an operating mode which is not supported by the mobile station, the mobile station shall send a *Mobile Station Reject Order* with ORDQ set to '00000110' (message requires a capability that is not supported by the mobile station). If the response to this message exceeds the allowable length, the mobile

station shall send a *Mobile Station Reject Order* with ORDQ set to '00001000' (response message would exceed the allowable length). If the message specifies an information record which is not supported by the mobile station for the specified band class and operating mode, the mobile station shall send a *Mobile Station Reject Order* with ORDQ set to '00001001' (information record is not supported for the specified band class and operating mode).

24. *TMSI Assignment Message:* The mobile station shall store the TMSI zone and code as follows:

    - The mobile station shall store the length of the TMSI zone field by setting $ASSIGNING\_TMSI\_ZONE\_LEN_{s-p}$ to $TMSI\_ZONE\_LEN_r$,
    - The mobile station shall store the assigning TMSI zone number by setting the $ASSIGNING\_TMSI\_ZONE\_LEN_{s-p}$ least significant octets of $ASSIGNING\_TMSI\_ZONE_{s-p}$ to $TMSI\_ZONE_r$, and
    - The mobile station shall store the TMSI code by setting $TMSI\_CODE_{s-p}$ to $TMSI\_CODE_r$.

    The mobile station shall set the TMSI expiration time by setting $TMSI\_EXP\_TIME_{s-p}$ to $TMSI\_EXP\_TIME_r$. The mobile station shall disable the full-TMSI timer. The mobile station shall then respond with a *TMSI Assignment Completion Message* within T_{56m} seconds.

25. *Unlock Order:* After receiving this order, the mobile station is no longer locked. The mobile station should notify the user that the locked condition has been removed. The mobile station shall enter the *System Determination Substate of the Mobile Station Initialization State* with an *unlock indication* (see 2.6.1.1).

26. *User Zone Reject Message*

27. *Fast Call Setup Order*:

    - If $ORDQ_r$ is equal to '00000000', the mobile station shall process the message and respond with a *Fast Call Setup Order* as specified in 2.6.12.1. The mobile station shall enter the *Update Overhead Information Substate* of the *System Access State* with an order/message response indication within T_{32m} seconds.
    - If $ORDQ_r$ is equal to '00000001', the mobile station shall process the message as specified in 2.6.12.1.

28. General Extension Message: The mobile station shall process this message as specified in section 2.6.18.

The mobile station shall ignore all other messages and orders.

2.6.2.5 Mobile Station Origination Operation

The *Mobile Station Origination Operation* is performed when the mobile station is directed by the user to initiate a call, or if the *Mobile Station Idle State* is entered with $NDSS\_ORIG_s$ enabled.

If the mobile station is directed by the user to initiate a call, the mobile station shall perform the following:

- If $PACA_S$ is equal to enabled, the mobile station shall set $PACA_S$ to disabled and PACA_CANCEL to '0', shall disable the PACA state timer, and should indicate to the user that the PACA call has been canceled.
- The mobile station shall set CURR_ACC_MSG_SEQ to NULL.

The mobile station shall enter the *Update Overhead Information Substate* of the *System Access State* (see 2.6.3) with an origination indication within T_{33m} seconds.

2.6.2.6 Mobile Station Message Transmission Operation

Support of this operation is optional. If the mobile station supports the *Mobile Station Message Transmission Operation*, the operation is performed when the user directs the mobile station to transmit a *Data Burst Message*, or when the mobile station detects a change in hook status since the last time when the mobile station sent hook status information and the mobile station supports the *Device Information Message* on the r-csch, or when the mobile station determines that a *Radio Environment Message* is to be transmitted on the r-csch, or when the mobile station requests to operate in reduced slot cycle mode.

If the mobile station supports this operation, the mobile station shall set CURR_ACC_MSG_SEQ to NULL.

If the mobile station supports this operation and the operation is performed when the user directs the mobile station to transmit a *Data Burst Message*, the mobile station shall enter the *Update Overhead Information Substate* of the *System Access State* (see 2.6.3.2) with a message transmission indication within T_{33m} seconds.

If the mobile station supports this operation and the operation is performed when the mobile station detects a change in hook status since the last time when the mobile station sent hook status information, the mobile station shall enter the *Update Overhead Information Substate* of the *System Access State* (see 2.6.3.2) with a hook status indication within T_{33m} seconds.

If the mobile station supports this operation and the operation is performed when the mobile station determines that a *Radio Environment Message* is to be transmitted on the r-csch, the mobile station shall perform the following:

- If RER_MODE_ENABLED is set to YES, the mobile station shall enter the *Update Overhead Information Substate* of the *System Access State* (see 2.6.3.2) with a radio environment report indication within T_{33m} seconds.
- Otherwise, if TKZ_MODE_ENABLED is set to YES, the mobile station shall enter the *Update Overhead Information Substate* of the *System Access State* (see 2.6.3.2) with a tracking zone indication within T_{33m} seconds.

If the mobile station supports this operation and the operation is performed when the mobile station requests to operate in reduced slot cycle mode, the mobile station shall enter the *Update Overhead Information Substate* of the *System Access State* (see 2.6.3.2)

with a fast call setup indication within T_{33m} seconds.

2.6.2.7 Mobile Station Power-Down Operation

The *Mobile Station Power-Down Operation* is performed when the user directs the mobile station to power down.

The mobile station shall update stored parameters and perform other registration procedures as specified in 2.6.5.5.2.4.

If no power-down registration is performed (see 2.6.5.5.2.4), the mobile station may power down.

2.6.2.8 Mobile Station PACA Cancel Operation

The *Mobile Station PACA Cancel Operation* is performed when the user directs the mobile station to cancel a PACA call.

If $PACA_S$ is equal to enabled, the mobile station shall perform the following:

- The mobile station shall set $PACA_S$ to disabled.
- The mobile station shall set PACA_CANCEL to ‘0’, if PACA_CANCEL is equal to ‘1’.
- The mobile station shall disable the PACA state timer.
- The mobile station should indicate to the user that the PACA call has been canceled.
- The mobile station shall set CURR_ACC_MSG_SEQ to NULL.
- The mobile station shall enter the *Update Overhead Information Substate* of the *System Access State* (see 2.6.3) with a PACA cancel indication within T_{33m} seconds.

2.6.3 System Access State

In this state, the mobile station sends messages to the base station on the r-csch and receives messages from the base station on the f-csch.

As illustrated in Figure 2.6.3-1, the *System Access State* consists of the following substates:

- *Update Overhead Information Substate* - In this substate, if the base station supports the Primary Broadcast Control Channel for Spreading Rate 1 or if both the base station and mobile station supports the Primary Broadcast Control Channel for Spreading Rate 3 and if the protocol revision level in use is greater than six, the mobile station will monitor the Primary Broadcast Control Channel until it has received a current set of overhead messages; otherwise, the mobile station will monitor the Paging Channel until it has a current set of overhead messages.
- *Mobile Station Origination Attempt Substate* - In this substate, the mobile station sends an *Origination Message, Call Recovery Request Message* or a *Reconnect Message* (with ORIG_IND set to ‘1’) to the base station.

- *Page Response Substate* - In this substate, the mobile station sends a *Page Response Message* or a *Reconnect Message* (with ORIG_IND set to '0') to the base station.
- *Mobile Station Order/Message Response Substate* - In this substate, the mobile station sends a response to a message received from the base station.
- *Registration Access Substate* - In this substate, the mobile station sends a *Registration Message* to the base station.
- *Mobile Station Message Transmission Substate* - In this substate, the mobile station sends a *Data Burst Message* or a *Device Information Message* to the base station.
- *PACA Cancel Substate* - In this substate, the mobile station sends a *PACA Cancel Message* to the base station.

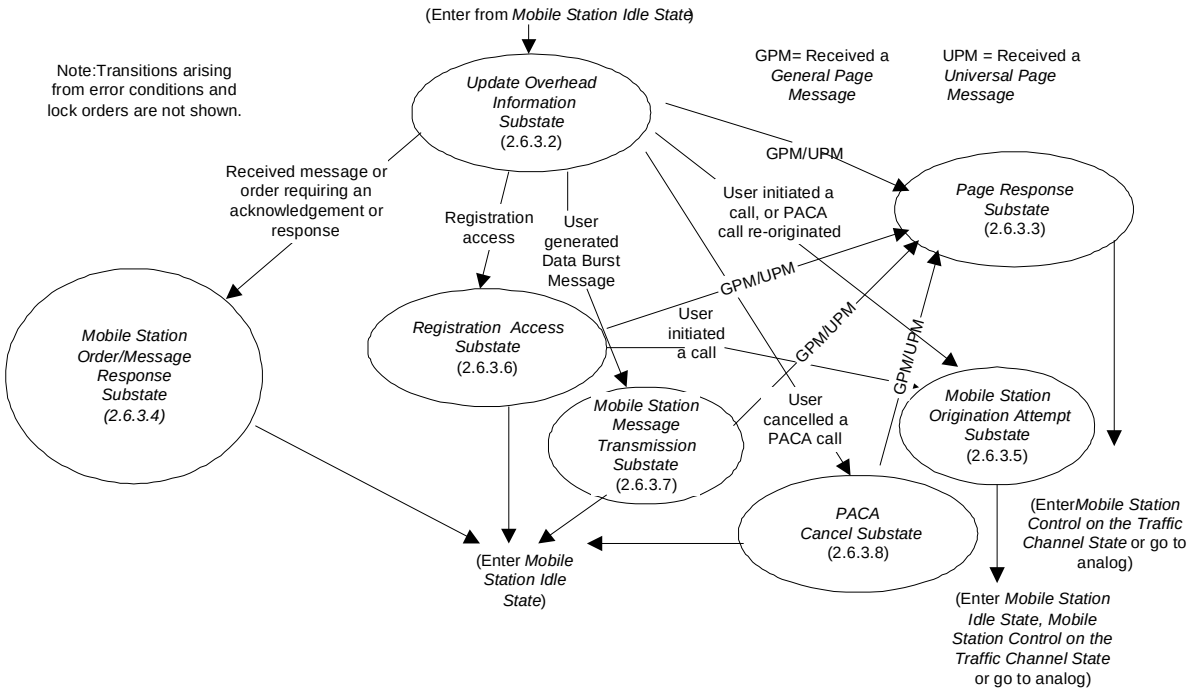

Figure 2.6.3-1. System Access State

2.6.3.1 Access Procedures

2.6.3.1.1 Access Attempts

If the mobile station monitors the Paging Channel, the mobile station transmits on the Access Channel using a random access procedure. Many parameters of the random access procedure are supplied by the base station in the *Access Parameters Message*. The random access procedure is described in [4] and [3].

If the mobile station monitors the Forward Common Control Channel/ Primary Broadcast Control Channel, the mobile station transmits on the Enhanced Access Channel using a random access procedure. Many parameters of the random access procedure are supplied by the base station in the *Enhanced Access Parameters Message*.

If Layer 3 receives an indication from Layer 2 that the system access is denied, the mobile station shall update its registration variables using SID_S, NID_S, REG_ZONE_S, and $ZONE\_TIMER_S$ that were stored from the first base station to which the mobile station sent an Access Probe, as specified in 2.6.5.5.3.2, and enter the *System Determination Substate* of the *Mobile Station Initialization State* with an access denied indication (see 2.6.1.1).

If Layer 3 receives an indication from Layer 2 that the system is lost, the mobile station shall update its registration variables using SID_S, NID_S, REG_ZONE_S, and $ZONE\_TIMER_S$ that were stored from the first base station to which the mobile station transmitted an Access Probe, as specified in 2.6.5.5.3.2 and enter the *System Determination Substate* of the *Mobile Station Initialization State* with a system lost indication (see 2.6.1.1)

2.6.3.1.2 Reserved

2.6.3.1.3 Handoffs

While in the *System Access State*, the mobile station shall continue its pilot search (see 2.6.3.1.3.1), and may perform access handoffs (see 2.6.3.1.3.2) and/or access probe handoffs (see 2.6.3.1.3.3).

If the mobile station performs access handoffs and/or access probe handoffs, the mobile station shall maintain the following variables:

- $CURRENT\_ACTIVE\_PILOT_S$
- $PREVIOUS\_ACTIVE\_PILOT_S$
- $FIRST\_ACTIVE\_PILOT_S$

Upon entering the *System Access State* the mobile station shall set $CURRENT\_ACTIVE\_PILOT_S$, $PREVIOUS\_ACTIVE\_PILOT_S$ and $FIRST\_ACTIVE\_PILOT_S$ to NULL. Prior to starting an access attempt, the mobile station shall set $CURRENT\_ACTIVE\_PILOT_S$ and $PREVIOUS\_ACTIVE\_PILOT_S$ to NULL. When the mobile station selects a base station for transmission of an access probe, the mobile station shall proceed as follows:

- If $CURRENT\_ACTIVE\_PILOT_S$ is not the same as the pilot of the selected base station, the mobile station shall set $PREVIOUS\_ACTIVE\_PILOT_S$ to the value of $CURRENT\_ACTIVE\_PILOT_S$.
- The mobile station shall set $CURRENT\_ACTIVE\_PILOT_S$ to the identity of the pilot corresponding to the selected base station.
- If $FIRST\_ACTIVE\_PILOT_S$ is NULL, the mobile station shall set $FIRST\_ACTIVE\_PILOT_S$ to the value of $CURRENT\_ACTIVE\_PILOT_S$.

Before the mobile station transmits an access probe to a new base station on the Access Channel, the mobile station shall update parameters based on the *System Parameters Message*, the *Access Parameters Message* and the *Extended System Parameters Message* on the associated new Paging Channel and process parameters from the messages (see 2.6.2.2.1, 2.6.2.2.2, and 2.6.2.2.5).

Before the mobile station transmits an access probe to a new base station on the Enhanced Access Channel, the mobile station shall update parameters based on the *ANSI-41 System Parameters Message*, the *Enhanced Access Parameters Message*, and the *MC-RR Parameters Message* on the associated new Primary Broadcast Control Channel and process parameters from the messages (see 2.6.2.2.13, 2.6.2.2.14, and 2.6.2.2.15).

If the mobile station monitors the Paging Channel, the mobile station shall update parameters based on the *Neighbor List Message, the Extended Neighbor List Message*, or the *General Neighbor List Message* on the associated new Paging Channel and process parameters from the message (see 2.6.2.2.3, 2.6.2.2.7, and 2.6.2.2.8).

If the mobile station monitors the Forward Common Control Channel/ Primary Broadcast Control Channel, the mobile station shall update parameters based on the *Universal Neighbor List Message* on the associated new Primary Broadcast Control Channel and process parameters from the message (see 2.6.2.2.17).

If the mobile station receives the *User Zone Identification Message* or the *Private Neighbor List Message*, the mobile station shall update parameters based on these messages on the associated new Paging Channel or Primary Broadcast Control Channel and process parameters from the messages (see 2.6.2.2.9 and 2.6.2.2.10). If the mobile station receives a *Global Service Redirection Message* (see 2.6.2.2.6) which directs the mobile station away from the new base station, the mobile station shall not access the new base station. If the mobile station receives an *Extended Global Service Redirection Message* (see 2.6.2.2.11) which directs the mobile station away from the new base station, the mobile station shall not access the new base station. The mobile station shall process these messages only once after each access handoff.

2.6.3.1.3.1 Pilot Search

The following sets of pilot offsets are defined for a mobile station in the *System Access State*. Each pilot offset is a member of only one set.

- Active Set: The pilot offset of the Forward CDMA Channel whose Paging Channel or Forward Common Control Channel/ Primary Broadcast Control Channel is being monitored.
- Neighbor Set: The pilots that are not currently in the Active Set and are likely candidates for access handoff or access probe handoff. The members of the Neighbor Set are specified in the *Neighbor List Message*, the *Extended Neighbor List Message*, and the *General Neighbor List Message on the Paging Channel*. The members of the Neighbor Set are specified in the *Universal Neighbor List Message* on the Primary Broadcast Control Channel.

- Remaining Set: The set of all possible pilot offsets in the current system (integer multiples of $PILOT\_INC_S$) on the current CDMA Frequency Assignment, excluding the pilots in the Neighbor Set and the Active Set.

2.6.3.1.3.2 Access Handoff

The mobile station is permitted to perform an access handoff to use the Paging Channel with the best pilot strength and an associated Access Channel. The mobile station is permitted to perform an access handoff to use the Forward Common Control Channel with the best pilot strength and an associated Enhanced Access Channel. The mobile station is permitted to perform an access handoff when waiting for a response from the base station or before sending a response to the base station. An access handoff is permitted after an access attempt while the mobile station is in the *Page Response Substate* or the *Mobile Station Origination Attempt Substate*.

When the mobile station declares a loss of the Paging Channel or the Forward Common Control Channel while waiting for a response from the base station in the *Page Response Substate* or in the *Mobile Station Origination Attempt Substate*, the mobile station shall perform an access handoff, if all of the following conditions hold:

- The pilot corresponding to the new base station is in the list ACCESS_HO_LIST,
- $ACCESS\_HO_S$ is equal to '1', and
- The mobile station is not already in the process of performing an access attempt.

When the mobile station declares a loss of the Paging Channel or the Forward Common Control Channel, after receiving a message but before responding to that message while in the *Page Response Substate* or in the *Mobile Station Origination Attempt Substate*, the mobile station shall perform an access handoff if the following conditions hold:

- The pilot corresponding to the new base station is in the list ACCESS_HO_LIST,
- $ACCESS\_HO_S$ is equal to '1',
- $ACCESS\_HO\_MSG\_RSP_S$ is equal to '1', and
- The mobile station is not already in the process of performing an access attempt.

When the mobile station declares an insufficiency of the Paging Channel[20] or the Forward Common Control Channel, while waiting for a response from the base station in the *Page Response Substate* or in the *Mobile Station Origination Attempt Substate*, the mobile station may perform an access handoff if all of the following conditions hold:

- The pilot corresponding to the new base station is in the list ACCESS_HO_LIST,
- $ACCESS\_HO_S$ is equal to '1', and
- The mobile station is not already in the process of performing an access attempt.

[20] Insufficiency of the Paging Channel and the Forward Common Control Channel is implementor-defined.

When the mobile station declares an insufficiency of the Paging Channel[21] or the Forward Common Control Channel, after receiving a message but before responding to that message while in the *Page Response Substate* or in the *Mobile Station Origination Attempt Substate,* the mobile station may perform an access handoff if all of the following conditions hold:

- The pilot corresponding to the new base station is in the list ACCESS_HO_LIST,
- $ACCESS\_HO_S$ is equal to '1',
- $ACCESS\_HO\_MSG\_RSP_S$ is equal to '1', and
- The mobile station is not already in the process of performing an access attempt.

If $ACCESS\_PROBE\_HO_S$ is equal to '0' and $ACCESS\_HO_S$ is equal to '1', and the mobile station declares a loss of the Paging Channel or the Forward Common Control Channel during an access attempt, after sending at least one complete access probe, the mobile station may monitor other Paging Channels or the Forward Common Control Channels which are in ACCESS_HO_LIST for T_{42m} seconds after the loss of the Paging Channel or the Forward Common Control Channel on which the access attempt was made[22].

2.6.3.1.3.3 Access Probe Handoff

The mobile station is permitted to perform an access probe handoff when the mobile station is in the *Page Response Substate* or the *Mobile Station Origination Attempt Substate.*

The mobile station may perform an access probe handoff during an access attempt to a pilot in ACCESS_HO_LIST when the message being sent is the *Origination Message*, *Reconnect Message*, *Call Recovery Request Message* or the *Page Response Message*, if all of the following conditions hold:

- $ACCESS\_PROBE\_HO_S$ is equal to '1',
- The mobile station is in the *Page Response Substate* or the *Mobile Station Origination Attempt Substate,* and
- The mobile station has performed fewer than ($MAX\_NUM\_PROBE\_HO_S$ +1) access probe handoffs during the current access attempt.

The mobile station may also perform an access probe handoff during an access attempt to a pilot in ACCESS_HO_LIST when the message being sent is a message other than the *Origination Message*, *Reconnect Message*, *Call Recovery Request Message* or the *Page Response Message*, if all of the preceding conditions hold and $ACC\_PROBE\_HO\_OTHER\_MSG_S$ is equal to '1'.

---

[21] Insufficiency of the Paging Channel and the Forward Common Control Channel is implementor-defined.

[22] The mobile station would be waiting for a response to the message transmitted in the access probe.

The mobile station may also perform an access probe handoff during an access attempt to a pilot not in ACCESS_HO_LIST when the message being sent is the *Origination Message*, *Reconnect Message*, *Call Recovery Request Message* or the *Page Response Message*, if all of the following conditions hold:

- $ACC\_HO\_LIST\_UPD_S$ is equal to '1',
- $ACCESS\_PROBE\_HO_S$ is equal to '1',
- The new pilot is stronger than any pilot in ACCESS_HO_LIST,
- The new pilot has the corresponding ACCESS_HO_ALLOWED field in the NGHBR_REC equal to '1',
- Inclusion of the new pilot in ACCESS_HO_LIST does not cause the Access Channel or Enhanced Access Channel message to exceed the maximum capsule size,
- Inclusion of the new pilot in ACCESS_HO_LIST does not cause the number of members to exceed N_{13m},
- The mobile station is in the *Page Response Substate* or the *Mobile Station Origination Attempt Substate*, and
- The mobile station has performed fewer than ($MAX\_NUM\_PROBE\_HO_S$ +1) access probe handoffs during the current access attempt.

The mobile station may also perform an access probe handoff during an access attempt to a pilot not in ACCESS_HO_LIST when the message being sent is a message other than the *Origination Message*, *Reconnect Message*, *Call Recovery Request Message* or the *Page Response Message*, if all of the preceding conditions hold and $ACC\_PROBE\_HO\_OTHER\_MSG_S$ is equal to '1'.

If the above conditions are met, the mobile station may perform an access probe handoff when the mobile station declares a loss of the Paging Channel or Forward Common Control Channel (see 2.6.3.1.8); the mobile station may also perform an access probe handoff after getting an indication that the TA timer expired (see [4]) and the mobile station declares an insufficiency of the Paging Channel[23] or the Forward Common Control Channel.

If the mobile station performs an access probe handoff, the mobile station shall suspend the access attempt on the old pilot and shall restart the access attempt on the new pilot (*i.e.* starting with the first probe of the first probe sequence of the access sub-attempt), as specified in [4]. The mobile station shall record the identity of the pilots to which access probes have been transmitted within the current access attempt.

The mobile station shall not reset its access probe handoff count until the access attempt ends.

---

[23] Insufficiency of the Paging Channel and the Forward Common Control Channel is implementor-defined.

Layer 3 shall send an L2-Supervision.Request primitive to Layer 2 to cancel the access attempt if the length of the message to be sent exceeds MAX_CAP_SIZE of the new base station. The mobile station may monitor other Paging Channels or Forward Common Control Channels which are in ACCESS_HO_LIST for T_{42m} seconds after aborting the access attempt[24].

2.6.3.1.4 System Access State Exit Procedures

Upon exiting the *System Access State*, the mobile station shall direct Layer 2 to cancel (see [4]) any access attempt in progress and discard the associated message. The mobile station shall then disable the *System Access State* timer.

2.6.3.1.5 Reserved

2.6.3.1.6 Full-TMSI Timer

Whenever the mobile station sends its full TMSI, the mobile station enables a timer, called the full-TMSI timer. If the full-TMSI timer expires, the mobile station deletes the TMSI by setting all of the bits in the $TMSI\_CODE_{s\text{-}p}$ field to '1'.

The mobile station shall maintain the full-TMSI timer. The mobile station shall provide a means for enabling or disabling the full-TMSI timer.

If the mobile station sends a message with an address including the $ASSIGNING\_TMSI\_ZONE_{s\text{-}p}$ and the full-TMSI timer is disabled, the mobile station shall enable the full-TMSI timer with a duration equal to $T_{69m} + 2.56 \times 2^i$ seconds where i is equal to $SLOT\_CYCLE\_INDEX_s$.

2.6.3.1.7 Monitoring Pilots

The mobile station assists the base station in the Traffic Channel assignment process by monitoring and reporting (see [4]) the pilot strength of the pilot in the mobile station's Paging Channel or Forward Common Control Channel Active Set (see 2.6.3.1.3.1). The mobile station can also monitor and report (see [4]) other pilots on the same frequency; in such cases, the mobile station shall create ACCESS_HO_LIST and OTHER_REPORTED_LIST and shall monitor the pilots on those lists, if any.

For each monitored pilot, the mobile station shall record the pilot PN phase and the pilot strength PS, using the most recent measurements from the searcher element (see [2]), as they become available. The mobile station shall identify each pilot through its pilot PN phase (the phase of the pilot PN sequence, in units of one chip, relative to the zero offset pilot PN sequence of the pilot (see 2.6.6.2.4)). The mobile station shall determine the pilot strength, PS, as specified in 2.6.6.2.2.

---

[24] The mobile station would be waiting for a response to the message transmitted in the access probe.

2.6.3.1.7.1 Generation of the Initial Access Handoff List

ACCESS_HO_LIST is created immediately before transmitting the first access probe after entering the *System Access State*. When it is created, ACCESS_HO_LIST is defined as a set of at most N_{13m} pilots, having the greatest pilot strength in comparison with other qualifying pilots and for which all of the following apply:

- The strength of each member exceeds T_ADD_s.
- Each member, other than the Active Set pilot, has the corresponding ACCESS_HO_ALLOWED field in the NGHBR_REC equal to '1'.
- The Active Set pilot that the mobile station monitors when the mobile station enters the *System Access State* is a member.
- All members can be contained in the Access Channel or Enhanced Access Channel message without exceeding the maximum capsule size.

2.6.3.1.7.2 Update of the Access Handoff List

When the mobile station performs an access probe handoff to a pilot which was not previously included in ACCESS_HO_LIST (see 2.6.3.1.3.3), it adds the pilot to ACCESS_HO_LIST.

If $ACC\_HO\_LIST\_UPD_s$ is equal to '1', the mobile station can update ACCESS_HO_LIST, as follows:

- The mobile station can add one or more new pilots other than the Active Set pilot to ACCESS_HO_LIST before transmitting an access probe.
- The mobile station can also drop from ACCESS_HO_LIST pilots to which access probes have not been transmitted since entering the *System Access State* and whose strength have fallen below T_ADD_s.

When it is updated before transmitting a subsequent access probe, ACCESS_HO_LIST is defined as a set of at most N_{13m} pilots, having the greatest pilot strength in comparison with other qualifying pilots and for which all of the following apply:

- The strength of each member to which access probes have not been transmitted exceeds T_ADD_s.
- Each member other than the pilot to which the first access probe in the System Access State was transmitted has the corresponding ACCESS_HO_ALLOWED field in the NGHBR_REC equal to '1'.
- The Active Set pilot to which the next access probe is to be transmitted is a member.
- All pilots to which access probes have been transmitted since entering the *System Access State* are members.
- All members can be contained in the Access Channel or Enhanced Access Channel message without exceeding the maximum capsule size.

2.6.3.1.7.3 Generation of the Other Reported List

OTHER_REPORTED_LIST (specified by NUM_ADD_PILOTS and NUM_AUX_PILOTS, see [4]) is defined as a set of no more than N_{13m} minus the number of pilots in ACCESS_HO_LIST pilots, having the greatest pilot strength in comparison with other qualifying pilots and for which all of the following apply:

- The strength of each member exceeds T_ADD_s.
- No member is included in ACCESS_HO_LIST.
- All members can be contained in the Access Channel or Enhanced Access Channel message without exceeding the maximum capsule size.

2.6.3.1.7.4 Update of OTHER_REPORTED_LIST

Before transmitting each access probe, the mobile station shall generate OTHER_REPORTED_LIST according to section 2.6.3.1.7.3, using the most recent pilot strength information available from its searcher element (see [2]). If the mobile station updates ACCESS_HO_LIST before transmitting an access probe, it shall update OTHER_REPORTED_LIST after updating ACCESS_HO_LIST.

2.6.3.1.8 Paging Channel and Forward Common Control Channel/ Primary Broadcast Control Channel Monitoring

When in the *System Access State*, the mobile station shall monitor the Paging Channel or the Forward Common Control Channel/ Primary Broadcast Control Channel at all times.

The mobile station shall set a timer for T_{72m} seconds, when it begins to monitor the Paging Channel or the Forward Common Control Channel/ Primary Broadcast Control Channel and whenever it gets an indication that a valid message was received on the Paging Channel or the Forward Common Control Channel/ Primary Broadcast Control Channel, whether addressed to the mobile station or not (see [4]).

If the T_{72m} timer expires:

- The mobile station shall first finish transmitting the access probe in progress, if any.
- If by declaring a loss of the Paging Channel or the Forward Common Control Channel, the eligibility requirements for performing access handoff are met (see 2.6.3.1.3.2), then the mobile station shall declare a loss of the Paging Channel or the Forward Common Control Channel, and perform an access handoff. If by declaring a loss of the Paging Channel or the Forward Common Control Channel, the eligibility requirements for performing access probe handoff are met (see 2.6.3.1.3.3), then the mobile station may declare a loss of the Paging Channel or the Forward Common Control Channel, and perform an access probe handoff. If the mobile station performs an access handoff or an access probe handoff, the mobile station restarts the Paging Channel or the Forward Common Control Channel/ Primary Broadcast Control Channel monitoring procedure for the new base station.

- If an access attempt was in progress when the timer expired and that access attempt had already been suspended and resumed previously (see below), the mobile station shall declare a loss of the Paging Channel[25] or the Forward Common Control Channel and shall disable its transmitter.
- If an access attempt was in progress when the timer expired and that access attempt had not been suspended and resumed before and the mobile station does not perform access probe handoff, the mobile station shall declare a temporary loss of the Paging Channel or the Forward Common Control Channel, shall direct Layer 2 to suspend the access attempt (see [4]), and shall perform the following:
  - The mobile station shall set the timer to (T_{40m}-T_{72m}) seconds.
  - If the mobile station receives an indication that a valid message on the Paging Channel or the Forward Common Control Channel, whether addressed to the mobile station or not, was received (see [4]) prior to the expiration of the (T_{40m}-T_{72m}) timer, the mobile station shall re-enable the transmitter, shall direct Layer 2 to resume operation from the beginning of the interrupted access probe sequence of the access sub-attempt (see [4]), and shall transmit the first probe of the new access probe sequence immediately after re-enabling the transmitter.
  - If the (T_{40m}-T_{72m}) timer expires, the mobile station shall direct Layer 2 to cancel any access attempt (see [4]) and shall declare a loss of the Paging Channel or the Forward Common Control Channel.
- If an access attempt was not in progress when the timer expired and the mobile station does not perform access handoff, the mobile station shall perform the following:
  - The mobile station shall set the timer to (T_{40m}-T_{72m}) seconds.
  - If the (T_{40m}-T_{72m}) timer expires, the mobile station shall declare a loss of the Paging Channel or the Forward Common Control Channel/ Primary Broadcast Control Channel.

2.6.3.2 Update Overhead Information Substate

In this substate, if the base station supports the Primary Broadcast Control Channel for Spreading Rate 1, or if both the mobile station and base station support Spreading Rate 3 on the common channels, then the mobile station shall monitor the Primary Broadcast Control Channel until it has received the current configuration messages; otherwise, the mobile station shall monitor the Paging Channel until it has received the current configuration messages. The mobile station compares sequence numbers to determine whether all of the configuration messages are up-to-date. To make sure it has the latest access parameters, the mobile station receives at least one message containing the

[25] Requirements for processing the loss of Paging Channel are given separately for each substate of the *System Access State*, in the sections describing the substates.

ACC_MSG_SEQ field (except in case where the mobile station enters this substate with a page response indication, since the initiating page contains ACC_MSG_SEQ), and waits, if necessary, for an *Access Parameters Message* or *an Enhanced Access Parameters Message*. In addition, if the mobile station is monitoring the Primary Broadcast Control Channel and $SENDING\_RAND_S$ is equal to '1', then it shall also wait for an *ANSI-41 RAND Message*.

Upon entering the *Update Overhead Information Substate*, the mobile station shall set the *System Access State* timer to a value of T_{41m} seconds. The mobile station shall set PAGED to NO.

If the *System Access State* timer expires while in this substate, the mobile station shall enter the *System Determination Substate* of the *Mobile Station Initialization State* with a system lost indication (see 2.6.1.1).

If the mobile station declares a loss of the Paging Channel or the Primary Broadcast Control Channel (see 2.6.3.1.8), the mobile station shall perform the following:

- If $PACA_S$ is equal to enabled, the mobile station shall set $PACA_S$ to disabled and PACA_CANCEL to '0', shall disable the PACA state timer, and should indicate to the user that the PACA call has been canceled.
- The mobile station shall declare an access attempt failure and update its registration variables as specified in 2.6.5.5.3.2.
- The mobile station shall enter the *Mobile Station Idle State*.

If $PACA_S$ is equal to enabled, the mobile station shall set PACA_CANCEL to '1' when the user directs the mobile station to cancel a PACA call.

If the mobile station receives any of the following messages, it shall process the message as follows:

1. *System Parameters Message:* The mobile station shall process the parameters from the message (see 2.6.2.2.1).
2. *Access Parameters Message:* The mobile station shall process the parameters from the message (see 2.6.2.2.2).
3. *Neighbor List Message:* The mobile station shall process the parameters from the message (see 2.6.2.2.3).
4. *CDMA Channel List Message:* The mobile station shall process the parameters from the message (see 2.6.2.2.4).
5. *Extended System Parameters Message:* The mobile station shall process the parameters from the message (see 2.6.2.2.5).
6. *Global Service Redirection Message:* The mobile station shall process the parameters from the message (see 2.6.2.2.6).
7. *Extended Neighbor List Message:* The mobile station shall process the parameters from the message (see 2.6.2.2.7).
8. *General Neighbor List Message:* The mobile station shall process the parameters from the message (see 2.6.2.2.8).

9. *Lock Until Power-Cycled Order:* The mobile station shall record the reason for the *Lock Until Power-Cycled Order* in the mobile station's semi-permanent memory ($LCKRSN\_P_{s-p}$ equals the least-significant four bits of $ORDQ_r$). The mobile station should notify the user of the locked condition. The mobile station shall then enter the *System Determination Substate* of the *Mobile Station Initialization State* with a lock indication (see 2.6.1.1), and shall not enter the *System Access State* again until after the next mobile station power-up or until it has received an *Unlock Order*. This requirement shall take precedence over any other mobile station requirement specifying entry to the *System Access State*.

10. *General Page Message* or *Universal Page Message:* If CURR_ACC_MSG_SEQ is equal to NULL, the mobile station shall set CURR_ACC_MSG_SEQ to $ACC\_MSG\_SEQ_r$. The mobile station shall compare $CONFIG\_MSG\_SEQ_s$ to $CONFIG\_MSG\_SEQ_r$. If the comparison results in a mismatch, the mobile station shall set $CONFIG\_MSG\_SEQ_s$ to $CONFIG\_MSG\_SEQ_r$. The mobile station may ignore the rest of the message. If this substate was not entered with an origination indication, page response indication, direct channel assignment update overhead indication, direct channel assignment respond indication, or direct channel assignment failure indication, the mobile station may also determine whether there is a page match. If the mobile station attempts to determine whether there is a page match, it shall use the procedure as defined in 2.6.2.3. If a match is declared, the mobile station shall set PAGED to YES.

11. *User Zone Identification Message:* The mobile station shall process the parameters from the message (see 2.6.2.2.9).

12. *Private Neighbor List Message:* The mobile station shall process the parameters from the message (see 2.6.2.2.10).

13. *Extended Global Service Redirection Message:* The mobile station shall process the parameters from the message (see 2.6.2.2.11).

14. *Extended CDMA Channel List Message:* The mobile station shall process the parameters from the message (see 2.6.2.2.12).

15. *ANSI-41 System Parameters Message*: The mobile station shall process the parameters from the message (see 2.6.2.2.13).

16. *MC-RR Parameters Message*: The mobile station shall process the parameters from the message (see 2.6.2.2.14).

17. *Enhanced Access Parameters Message:* The mobile station shall process the parameters from the message (see 2.6.2.2.15).

18. *ANSI-41 RAND Message*: The mobile station shall process the parameters from the message (see 2.6.2.2.16).

19. *Universal Neighbor List Message:* The mobile station shall process the parameters from the message (see 2.6.2.2.17).

20. *Extended Channel Assignment Message*: If this substate was entered with an origination indication, or a direct channel assignment update overhead indication,

or a direct channel assignment respond indication, or a direct channel assignment failure indication, or if the $DIRECT\_CH\_ASSIGN\_IND_r$ is not included, or the $DIRECT\_CH\_ASSIGN\_IND_r$ is included and is set to '0', the mobile station shall ignore this message. Otherwise, the mobile station shall process the message as follows:

- If $RESPOND\_IND_r$ is equal to '0', the mobile station shall perform the following in the order specified:
  - The mobile station shall set $CONFIG\_MSG\_SEQ_s$ to $CONFIG\_MSG\_SEQ_r$.
  - The mobile station shall wait till stored configuration parameters are current (see 2.6.2.2).
  - Once the stored configuration parameters are current, the mobile station shall disable the System Access State timer and process the message as specified in section 2.6.3.3.
- If $RESPOND\_IND_r$ is equal to '1', the mobile station shall perform the following in the order specified:
  - The mobile station shall set $CONFIG\_MSG\_SEQ_s$ to $CONFIG\_MSG\_SEQ_r$.
  - When all of the following conditions are met:
    + the stored configuration parameters are current (see 2.6.2.2)
    + $CURR\_ACC\_MSG\_SEQ_s$ and $ACC\_MSG\_SEQ_s$ are equal and are not NULL, and
    + if the mobile station is monitoring the Primary Broadcast Control Channel and $SENDING\_RAND_s$ is equal to '1', the *ANSI-41 RAND Message* has been received,

    the mobile station shall disable the System Access State timer and process the message as specified in section 2.6.3.3.

21. *General Extension Message:* The mobile station shall process this message as specified in section 2.6.18.

If the mobile station receives a message which is not included in the above list, the mobile station shall ignore the message.

If this substate was entered with a direct channel assignment update overhead indication, the mobile station shall perform the following in the order specified:

- The mobile station shall wait till the stored configuration parameters are current (see 2.6.2.2).
- Once the stored configuration parameters are current, the mobile station shall perform the following:
  - The mobile station shall disable the System Access State timer.
  - The mobile station shall process the *Extended Channel Assignment Message* received in *Mobile Station Idle State* as specified in section 2.6.3.3.

When all of the following conditions are met:

- The stored configuration parameters are current (see 2.6.2.2)
- $CURR\_ACC\_MSG\_SEQ_S$ and $ACC\_MSG\_SEQ_S$ are equal and are not NULL, and
- If the mobile station is monitoring the Primary Broadcast Control Channel and $SENDING\_RAND_S$ is equal to '1', the *ANSI-41 RAND Message* has been received,

then the mobile station shall disable the System Access State timer and shall perform one of the following:

- If PAGED is equal to YES, the mobile station shall determine whether the message resulting in the page match was received on the current Paging Channel or Forward Common Control Channel. If the message was received on the current Paging Channel or Forward Common Control Channel, the mobile station shall enter the *Page Response Substate*; otherwise, the mobile station shall enter the *Mobile Station Idle State*.
- If this substate was entered with a page response indication, direct channel assignment respond indication, or direct channel assignment failure indication, and the mobile station has not performed an access entry handoff, the mobile station shall determine whether the message resulting in the page response was received on the current Paging Channel or Forward Common Control Channel. If the message was received on the current Paging Channel or Forward Common Control Channel, the mobile station shall enter the *Page Response Substate;* otherwise, the mobile station shall enter the *Mobile Station Idle State* with the corresponding indication.
- If this substate was entered with a page response indication, direct channel assignment respond indication, or direct channel assignment failure indication, and the mobile station has performed an access entry handoff, the mobile station shall enter the *Page Response Substate* with the corresponding indication.
- If this substate was entered with a page response retransmission indication, the mobile station shall enter the *Page Response Substate*.
- If this substate was entered with an origination indication, the mobile station shall enter the *Mobile Station Origination Attempt Substate* with an origination indication.
- If this substate was entered with a PACA response indication, the mobile station shall enter the *Mobile Station Origination Attempt Substate* with a PACA response indication.
- If this substate was entered with an order/message response indication and the mobile station has not performed an access entry handoff, the mobile station shall determine whether the message resulting in the response was received on the current Paging Channel or Forward Common Control Channel. If the message was received on the current Paging Channel or Forward Common Control Channel, the mobile station shall enter the *Mobile Station Order/Message Response Substate;* otherwise, the mobile station shall discard the response and enter the *Mobile Station Idle State*.

- If this substate was entered with an order/message response indication and the mobile station has performed an access entry handoff, the mobile station shall enter the *Mobile Station Order/Message Response Substate*.
- If this substate was entered with a registration indication, the mobile station shall enter the *Registration Access Substate*.
- If this substate was entered with a message transmission indication, the mobile station shall enter the *Mobile Station Message Transmission Substate* with a message transmission indication.
- If this substate was entered with a hook status indication, the mobile station shall enter the *Mobile Station Message Transmission Substate* with a hook status indication.
- If this substate was entered with a PACA cancel indication, the mobile station shall enter the *PACA Cancel Substate*.
- If this substate was entered with a radio environment report indication, the mobile station shall enter the *Mobile Station Message Transmission Substate* with a radio environment report indication.
- If this substate was entered with a tracking zone indication, the mobile station shall enter the *Mobile Station Message Transmission Substate* with a tracking zone indication.
- If this substate was entered with a fast call setup indication, the mobile station shall enter the *Mobile Station Message Transmission Substate* with a fast call setup indication.

2.6.3.3 Page Response Substate

In this substate, the mobile station sends a *Page Response Message* or a *Reconnect Message* in response to a mobile-station-addressed page or direct channel assignment from a base station. If the mobile station sends a *Reconnect Message*, it shall set the ORIG_IND field of the message to ‘0’.

If directed by the user to transmit a message, the mobile station may perform either of the following:

- The mobile station may transmit a *Data Burst Message* to the base station in this substate if all of the following conditions are true:
  - The mobile station has received confirmation of delivery of the *Page Response Message* or a *Reconnect Message*, and
  - ACCT is not enabled for the service option number associated with the *Data Burst Message* as follows:
    - The service option number associated with the *Data Burst Message* is not equal to any ACCT_SO entry in ACCT_SO_LIST, and
    - The service option group number of the service option associated with the *Data Burst Message* is not equal to any ACCT_SO_GRP entry in

ACCT_SO_GRP_LIST.

- If the mobile station sends a *Reconnect Message* in assured mode in this substate, the mobile station may include a Short Data Burst (see [30]) in the *Reconnect Message* by setting the SDB_INCL field to '1', if all of the following conditions are true:
  - $SDB\_SUPPORTED_S$ and $SDB\_IN\_RCNM\_IND_S$ are equal to '1', and
  - ACCT is not enabled for the service option number associated with the Short Data Burst as follows:
    - The service option number associated with the Short Data Burst is not equal to any ACCT_SO entry in ACCT_SO_LIST, and
    - The service option group number of the service option associated with the Short Data Burst is not equal to any ACCT_SO_GRP entry in ACCT_SO_GRP_LIST.

The mobile station shall not send the *Reconnect Message* if $RECONNECT\_MSG\_IND_S$ equals '0' or if this message is not being sent to reconnect a dormant packet data service instance.

If a base station responds to the *Page Response Message* or the *Reconnect Message* with an authentication request, the mobile station responds in this substate.

If a message received from the base station requires a Layer 2 acknowledgment and does not require a Layer 3 response, Layer 3 shall indicate to Layer 2 that no response is outstanding (see [4]).

If a message received from the base station requires a Layer 2 acknowledgment and also a Layer 3 response, Layer 3 shall indicate to Layer 2 that a response is outstanding (see [4]).

When transmitting a response to a message received from the base station, Layer 3 shall indicate to Layer 2 that the type of the message is a response (see [4]).

When transmitting an autonomous message (i.e., a message that is not sent as a response to a message received from the base station) other than the *Data Burst Message*, Layer 3 shall indicate to Layer 2 that the type of the message is a request other than a registration request or a message transmission request (see [4]).

When transmitting an autonomous *Data Burst Message*, Layer 3 shall indicate to Layer 2 that the type of the message is a message transmission request (see [4]).

If the mobile station has a stored service configuration (that is, parameters conveyed by both the Service Configuration information record and the Non-negotiable Service Configuration information record) and corresponding SYNC_ID with associated SID and NID that are equal to the SID_S and NID_S respectively, and $USE\_SYNC\_ID_S$ is equal to '1', the mobile station may include the SYNC_ID field in the *Page Response Message* or the *Reconnect Message* and, if included, shall set it to the SYNC_ID corresponding to the stored service configuration. If the mobile station includes SYNC_ID field in the *Page Response Message* or the *Reconnect Message*, the mobile station shall store the value of the SYNC_ID field in $SYNC\_ID_S$.

If the mobile station enters the *Page Response Substate* with a direct channel assignment respond indication, the mobile station shall perform the following:

- The mobile station shall send a *Page Response Message* or a *Reconnect Message* in unassured mode, and shall then enter the *Traffic Channel Initialization Substate* of the *Mobile Station Control on the Traffic Channel State*,
- While in the *Page Response Substate*, the mobile station shall ignore all received messages, and
- The mobile station shall not perform any other procedures in this section.

Upon entering the *Page Response Substate* for any reason other than with a direct channel assignment respond indication, the mobile station shall perform the following:

- Set $RLGAIN\_ADJ_S$ to '0000'.
- If $P\_REV\_IN\_USE_S$ is less than 11, set $PLCM\_TYPE_S$ to '0000'; otherwise set $PLCM\_TYPE_S$ to '0100'.
- Send a *Page Response Message* or a *Reconnect Message*.

While in this substate, the mobile station shall monitor the Paging Channel or the Forward Common Control Channel. The mobile station may perform an access probe handoff or access handoff as described in 2.6.3.1.3.2 and 2.6.3.1.3.3. If the mobile station declares a loss of the Paging Channel or the Forward Common Control Channel (see 2.6.3.1.8) during an access attempt, the mobile station may perform an access probe handoff; otherwise, it shall declare an access attempt failure and shall perform the following actions:

- The mobile station shall update its registration variables as specified in 2.6.5.5.3.2,
- If the mobile station is monitoring the Paging Channel, the mobile station shall set $SYS\_PAR\_MSG\_SEQ_S$ and $ACC\_MSG\_SEQ_S$ to NULL,
- If the mobile station is monitoring the Forward Common Control Channel, the mobile station shall set $MC\_RR\_PAR\_MSG\_SEQ_S$ and $ACC\_MSG\_SEQ_S$ to NULL.
- If $PACA_S$ is equal to enabled, the mobile station shall set $PACA_S$ to disabled and PACA_CANCEL to '0', shall disable the PACA state timer, and should indicate to the user that the PACA call has been canceled.
- The mobile station shall disable its transmitter, and
- The mobile station shall enter the *Mobile Station Idle State*.

If the mobile station receives confirmation of delivery of any message sent by the mobile station in this substate, the mobile station shall perform an access handoff if all of the following conditions hold:

- The mobile station declares a loss of the Paging Channel or the Forward Common Control Channel, and
- The mobile station is permitted to perform an access handoff (see 2.6.3.1.3.2), and there are pilots other than the active pilot in the access handoff list (see 2.6.3.1.3.2).

If the mobile station declares a loss of the Paging Channel or the Forward Common Control Channel and does not perform an access handoff, the mobile station shall perform the following:

- If the mobile station is monitoring the Paging Channel, the mobile station shall set $SYS\_PAR\_MSG\_SEQ_S$ and $ACC\_MSG\_SEQ_S$ to NULL.
- If the mobile station is monitoring the Forward Common Control Channel, the mobile station shall set $MC\_RR\_PAR\_MSG\_SEQ_S$ and $ACC\_MSG\_SEQ_S$ to NULL.
- If $PACA_S$ is equal to enabled, the mobile station shall set $PACA_S$ to disabled and PACA_CANCEL to 0, shall disable the PACA state timer, and should indicate to the user that the PACA call has been canceled,
- The mobile station shall disable its transmitter, and
- The mobile station shall enter the *Mobile Station Idle State*.

If $PACA_S$ is equal to enabled, the mobile station shall set PACA_CANCEL to '1' when the user directs the mobile station to cancel a PACA call.

If the mobile station receives confirmation of delivery of the *Page Response Message* or the *Reconnect Message* sent in this substate, the mobile station shall update its registration variables with respect to the base station to which the first access probe was transmitted after entering the *System Access State*, as specified in 2.6.5.5.3.1.

If the *System Access State* timer expires while in this substate, the mobile station shall perform the following:

- If $PACA_S$ is equal to enabled, the mobile station shall set $PACA_S$ to disabled and PACA_CANCEL to '0', shall disable the PACA state timer, and should indicate to the user that the PACA call has been canceled.
- If the mobile station is monitoring the Paging Channel, the mobile station shall set $SYS\_PAR\_MSG\_SEQ_S$ and $ACC\_MSG\_SEQ_S$ to NULL, and shall enter the *Mobile Station Idle State*.
- If the mobile station is monitoring the Forward Common Control Channel, the mobile station shall set $MC\_RR\_PAR\_MSG\_SEQ_S$ and $ACC\_MSG\_SEQ_S$ to NULL and enter the *Mobile Station Idle State*.

The mobile station shall set and disable the *System Access State* timer as follows:

- The mobile station shall disable the timer whenever it begins an access attempt.
- The mobile station shall set the timer to T_{42m} seconds whenever it ends an access attempt.
- The mobile station shall disable the timer whenever it exits the *System Access State*.

If the mobile station receives a *Channel Assignment Message* or the *Extended Channel Assignment Message*, Layer 3 shall send a *dedicated channel assignment* indication to Layer 2 (see [4]). If the mobile station has not received confirmation of delivery of the *Page Response Message* or the *Reconnect Message*, before receiving the *Channel Assignment*

Message or the *Extended Channel Assignment Message*, the mobile station shall update its registration variables with respect to the base station to which the first access probe was transmitted after entering the *System Access State*, as specified in 2.6.5.5.3.1. If the mobile station has not received confirmation of delivery of a *Data Burst Message* before receiving the *Channel Assignment Message* or the *Extended Channel Assignment Message*, Layer 3 shall send an L2-Supervision.Request primitive to Layer 2 to abort any access attempt in progress and the mobile station may store the *Data Burst Message* for later transmission on the r-dsch.

If the mobile station is to exit the *System Access State* as a result of processing Layer 3 fields of a message requiring an acknowledgment, the mobile station shall exit the *System Access State* after Layer 3 receives an indication from Layer 2 that the acknowledgment to the message has been sent and acknowledged.

If Layer 3 receives a message other than a *Channel Assignment Message* or an *Extended Channel Assignment Message* with an indication from Layer 2 that an access attempt for a message being transmitted was not terminated as a result of processing the Layer 2 fields of the received message, the mobile station shall ignore the received message.

The following directed messages and orders can be received. If any field value of the message or order is outside its permissible range, the mobile station may send a *Mobile Station Reject Order* with ORDQ equal to '00000100' (message field not in valid range).

1. *Authentication Challenge Message:* The mobile station shall respond to the message as specified in 2.3.12.1.4, regardless of the value of $AUTH_S$.

2. *Authentication Request Message:* The mobile station shall process the message and shall respond as specified in 2.3.12.5.2.

3. *Base Station Challenge Confirmation Order:* The mobile station shall respond to the message as specified in 2.3.12.1.5.

4. *Base Station Reject Order:* The mobile station shall perform the procedures as specified in 2.6.11.5.

5. *Channel Assignment Message:* The mobile station shall process the message as follows:

   - If $ASSIGN\_MODE_r$ equals '000', the mobile station shall perform the following actions:

     – The mobile station shall set CH_IND_S to '01'.

     – The mobile station shall store the frame offset ($FRAME\_OFFSET_S$ = $FRAME\_OFFSET_r$), the message encryption mode indicator ($ENCRYPT\_MODE_S$ = $ENCRYPT\_MODE_r$), and, if $FREQ\_INCL_r$ equals '1', the Frequency Assignment ($CDMACH_S$ = $CDMA\_FREQ_r$).

     – The mobile station shall set $SERV\_NEG_S$ to disabled.

     – If $PACA_S$ is equal to enabled, the mobile station shall set $PACA_S$ to disabled and PACA_CANCEL to '0', shall disable the PACA state timer, and should indicate to the user that the PACA call has been canceled.

- The mobile station shall initialize CODE_CHAN_LIST as described in 2.6.8.
- If the mobile station is currently monitoring the Paging Channel, the mobile station shall set IDLE_BCCH_CHAN to '0'; otherwise, the mobile station shall set IDLE_BCCH_CHAN to '1'. The mobile station shall set IDLE_CDMA_CHAN to $CDMACH_s$, IDLE_CDMABAND to $CDMABAND_s$, IDLE_SID to SID_s, IDLE_NID to NID_s, and IDLE_P_REV to P_REV_s.
- The mobile station shall enter the *Traffic Channel Initialization Substate* of the *Mobile Station Control on the Traffic Channel State*.

• If $ASSIGN\_MODE_r$ equals '001', the mobile station shall perform the following actions:

- If $FREQ\_INCL_r$ equals '1', the mobile station shall perform the following:
  - If the message requires acknowledgment, the mobile station shall wait until Layer 3 receives an indication from Layer 2 that the acknowledgment to the message has been sent and acknowledged.
  - The mobile station shall set $CDMACH_s$ to $CDMA\_FREQ_r$, tune to the new Frequency Assignment, and measure the strength of each pilot listed in the assignment using the Neighbor Set search procedures specified in 2.6.6.2.1 and 2.6.6.2.2.
- The mobile station shall set $CONFIG\_MSG\_SEQ_s$ and $ACC\_MSG\_SEQ_s$ to NULL (see 2.6.2.2) and shall set $PILOT\_PN_s$ to the pilot PN sequence offset of the strongest pilot in the list ($PILOT\_PN_r$).
- If the mobile station has not stored configuration parameters for the Primary Paging Channel of the new base station, or if the stored information is not current (see 2.6.2.2), the mobile station shall set $SYS\_PAR\_MSG\_SEQ_s$, $NGHBR\_LST\_MSG\_SEQ_s$, $EXT\_NGHBR\_LST\_MSG\_SEQ_s$, $GEN\_NGHBR\_LST\_MSG\_SEQ_s$, $USER\_ZONE\_ID\_MSG\_SEQ_s$, $PRI\_NGHBR\_LST\_MSG\_SEQ_s$, $CHAN\_LST\_MSG\_SEQ_s$, $EXT\_CHAN\_LST\_MSG\_SEQ_s$, $FD\_CHAN\_LST\_MSG\_SEQ_s$ EQ_s, $EXT\_SYS\_PAR\_MSG\_SEQ_s$, $GLOB\_SERV\_REDIR\_MSG\_SEQ_s$, and $EXT\_GLOB\_SERV\_REDIR\_MSG\_SEQ_s$ to NULL.
- The mobile station shall set $PAGE\_CHAN_s$ to '1' and $PAGECH_s$ to the Primary Paging Channel. The mobile station shall then begin monitoring the Primary Paging Channel of the selected base station.
- If $RESPOND_r$ is equal to '1', the mobile station shall enter the *Update Overhead Information Substate* with a page response retransmission indication within T_{34m} seconds after receiving the *Channel Assignment Message*.
- If $RESPOND_r$ is equal to '0', the mobile station shall enter the *Mobile Station Idle State* within T_{34m} seconds after receiving the *Channel Assignment Message*.

- If $ASSIGN\_MODE_r$ equals '100', the mobile station shall perform the following actions:
  - The mobile station shall set CH_IND_s to '01'.
  - If $PACA_s$ is equal to enabled, the mobile station shall set $PACA_s$ to disabled and PACA_CANCEL to '0', shall disable the PACA state timer, and should indicate to the user that the PACA call has been canceled.
  - If $GRANTED\_MODE_r$ equals '00', and the multiplex option and radio configuration combination specified in the DEFAULT_CONFIG field is not supported by the mobile station, the mobile station shall send a *Mobile Station Reject Order* with ORDQ field set to '00000110' (capability not supported by the mobile station) and remain in the *Page Response Substate*.
  - If $FREQ\_INCL_r$ equals '0', the mobile station shall perform the following actions:
    - The mobile station shall store the frame offset ($FRAME\_OFFSET_s$ = $FRAME\_OFFSET_r$), the message encryption mode indicator ($ENCRYPT\_MODE_s$ = $ENCRYPT\_MODE_r$), the granted mode ($GRANTED\_MODE_s$ = $GRANTED\_MODE_r$), and default configuration ($DEFAULT\_CONFIG_s$ = $DEFAULT\_CONFIG_r$).
    - The mobile station shall set $SERV\_NEG_s$ to enabled.
    - If the mobile station is currently monitoring the Paging Channel, the mobile station shall set IDLE_BCCH_CHAN to '0'; otherwise, the mobile station shall set IDLE_BCCH_CHAN to '1'. The mobile station shall set IDLE_CDMA_CHAN to $CDMACH_s$, IDLE_CDMABAND to $CDMABAND_s$, IDLE_SID to SID_s, IDLE_NID to NID_s, and IDLE_P_REV to P_REV_s.
    - The mobile station shall initialize CODE_CHAN_LIST as described in 2.6.8 and shall then enter the *Traffic Channel Initialization Substate* of the *Mobile Station Control on the Traffic Channel State*.
  - If $FREQ\_INCL_r$ equals '1', the mobile station shall perform the following actions:
    - If the band class is not supported by the mobile station, the mobile station shall send a *Mobile Station Reject Order* with ORDQ field set to '00000110' (capability not supported by the mobile station) and shall remain in the *Page Response Substate*.
    - If the band class is supported by the mobile station, the mobile station shall perform the following actions:

- The mobile station shall store the frame offset ($FRAME\_OFFSET_s$ = $FRAME\_OFFSET_r$), the message encryption mode indicator ($ENCRYPT\_MODE_s$ = $ENCRYPT\_MODE_r$), the bypass indicator ($BYPASS\_ALERT\_ANSWER_s$ = $BYPASS\_ALERT\_ANSWER_r$), the granted mode ($GRANTED\_MODE_s$ = $GRANTED\_MODE_r$), the default configuration ($DEFAULT\_CONFIG_s$ = $DEFAULT\_CONFIG_r$), the idle Frequency Assignment (IDLE_CDMA_CHAN = $CDMACH_s$), the idle band class (IDLE_CDMABAND = $CDMABAND_s$), the band class ($CDMABAND_s$ = $BAND\_CLASS_r$), and the Frequency Assignment ($CDMACH_s$ = $CDMA\_FREQ_r$).
- The mobile station shall initialize CODE_CHAN_LIST as described in 2.6.8, and shall set $SERV\_NEG_s$ to enabled.
- If the mobile station is currently monitoring the Paging Channel, the mobile station shall set IDLE_BCCH_CHAN to ‘0’; otherwise, the mobile station shall set IDLE_BCCH_CHAN to ‘1’. The mobile station shall set IDLE_SID to SID_s, IDLE_NID to NID_s, and IDLE_P_REV to P_REV_s.
- The mobile station shall then tune to the new Frequency Assignment and shall enter the *Traffic Channel Initialization Substate* of the *Mobile Station Control on the Traffic Channel State*.

• If $ASSIGN\_MODE_r$ equals ‘101’, the mobile station shall perform the following actions:

– If $FREQ\_INCL_r$ equals ‘0’, the mobile station shall perform the following actions:

+ If the message requires acknowledgment, the mobile station shall wait until Layer 3 receives an indication from Layer 2 that the acknowledgment to the message has been sent and acknowledged.

+ The mobile station shall set $CONFIG\_MSG\_SEQ_s$ and $ACC\_MSG\_SEQ_s$ to NULL (see 2.6.2.2) and shall set $PILOT\_PN_s$ to the pilot PN sequence offset of the strongest pilot in the list ($PILOT\_PN_r$).

+ If the mobile station has not stored configuration parameters for the Primary Paging Channel of the new base station, or if the stored information is not current (see 2.6.2.2), the mobile station shall set $SYS\_PAR\_MSG\_SEQ_s$, $NGHBR\_LST\_MSG\_SEQ_s$, $EXT\_NGHBR\_LST\_MSG\_SEQ_s$, $GEN\_NGHBR\_LST\_MSG\_SEQ_s$, $USER\_ZONE\_ID\_MSG\_SEQ_s$, $PRI\_NGHBR\_LST\_MSG\_SEQ_s$ $CHAN\_LST\_MSG\_SEQ_s$, $EXT\_CHAN\_LST\_MSG\_SEQ_s$, $FD\_CHAN\_LST\_MSG\_SEQ_s$ $EXT\_SYS\_PAR\_MSG\_SEQ_s$, $GLOB\_SERV\_REDIR\_MSG\_SEQ_s$, and $EXT\_GLOB\_SERV\_REDIR\_MSG\_SEQ_s$ to NULL.

- The mobile station shall set $PAGE\_CHAN_s$ to '1' and $PAGECH_s$ to the Primary Paging Channel. The mobile station shall then begin monitoring the Primary Paging Channel of the selected base station.
- If $RESPOND_r$ is equal to '1', the mobile station shall perform the following:
  - If the *Channel Assignment Message* does not require an acknowledgment, the mobile station shall enter the *Update Overhead Information Substate* with a page response retransmission indication within T_{34m} seconds after receiving the *Channel Assignment Message*.
  - If the *Channel Assignment Message* requires an acknowledgment, the mobile station shall enter the *Update Overhead Information Substate* with a page response retransmission indication within T_{34m} seconds after Layer 3 receives an indication from Layer 2 that the acknowledgment to the *Channel Assignment Message* has been sent and acknowledged.
- If $RESPOND_r$ is equal to '0', the mobile station shall perform the following:
  - If the *Channel Assignment Message* does not require an acknowledgment, the mobile station shall enter the *Mobile Station Idle State* within T_{34m} seconds after receiving the *Channel Assignment Message*.
  - If the *Channel Assignment Message* requires an acknowledgment, the mobile station shall enter the *Mobile Station Idle State* within T_{34m} seconds after Layer 3 receives an indication from Layer 2 that the acknowledgment to the *Channel Assignment Message* has been sent and acknowledged.

– If $FREQ\_INCL_r$ equals '1', the mobile station shall perform the following actions:

- If the band class is not supported by the mobile station, the mobile station shall send a *Mobile Station Reject Order* with ORDQ field set to '00000110' (capability not supported by the mobile station) and shall remain in the *Page Response Substate*.
- If the band class is supported by the mobile station, the mobile station shall perform the following actions:
  - If the message requires acknowledgment, the mobile station shall wait until Layer 3 receives an indication from Layer 2 that the acknowledgment to the message has been sent and acknowledged.

- The mobile station shall set $CDMACH_s$ to $CDMA\_FREQ_r$ and $CDMABAND_s$ to $BAND\_CLASS_r$. Then the mobile station shall tune to the new Frequency Assignment, measure the strength of each pilot listed in the assignment using the Neighbor Set search procedures specified in 2.6.6.2.1 and 2.6.6.2.2, set $PILOT\_PN_s$ to the pilot PN sequence offset of the strongest pilot in the list ($PILOT\_PN_r$), and set $CONFIG\_MSG\_SEQ_s$ and $ACC\_MSG\_SEQ_s$ to NULL (see 2.6.2.2).
- If the mobile station has not stored configuration parameters for the Primary Paging Channel of the new base station, or if the stored information is not current (see 2.6.2.2), the mobile station shall set $SYS\_PAR\_MSG\_SEQ_s$, $NGHBR\_LST\_MSG\_SEQ_s$, $EXT\_NGHBR\_LST\_MSG\_SEQ_s$, $GEN\_NGHBR\_LST\_MSG\_SEQ_s$, $USER\_ZONE\_ID\_MSG\_SEQ_s$, $PRI\_NGHBR\_LST\_MSG\_SEQ_s$, $CHAN\_LST\_MSG\_SEQ_s$, $EXT\_CHAN\_LST\_MSG\_SEQ_s$, $FD\_CHAN\_LST\_MSG\_SEQ_s$, $EXT\_SYS\_PAR\_MSG\_SEQ_s$, $GLOB\_SERV\_REDIR\_MSG\_SEQ_s$, and $EXT\_GLOB\_SERV\_REDIR\_MSG\_SEQ_s$ to NULL.
- The mobile station shall set $PAGE\_CHAN_s$ to '1' and $PAGECH_s$ to the Primary Paging Channel. The mobile station shall then begin monitoring the Primary Paging Channel of the selected base station.
- If $RESPOND_r$ is equal to '1', the mobile station shall perform the following:
  - If the *Channel Assignment Message* does not require an acknowledgment, the mobile station shall enter the *Update Overhead Information Substate* with a page response retransmission indication within T_{34m} seconds after receiving the *Channel Assignment Message*.
  - If the *Channel Assignment Message* requires an acknowledgment, the mobile station shall enter the *Update Overhead Information Substate* with a page response retransmission indication within T_{34m} seconds after Layer 3 receives an indication from Layer 2 that the acknowledgment to the *Channel Assignment Message* has been sent and acknowledged.
- If $RESPOND_r$ is equal to '0', the mobile station perform the following:
  - If the *Channel Assignment Message* does not require an acknowledgment, the mobile station shall enter the *Mobile Station Idle State* within T_{34m} seconds after receiving the *Channel Assignment Message* .

◊ If the *Channel Assignment Message* requires an acknowledgment, the mobile station shall enter the *Mobile Station Idle State* within T_{34m} seconds after Layer 3 receives an indication from Layer 2 that the acknowledgment to the *Channel Assignment Message* has been sent and acknowledged.

6. *Data Burst Message*

7. *Extended Channel Assignment Message:* The mobile station shall process the message as follows:

- If the *Extended Channel Assignment Message* requires an acknowledgment and the mobile station is to enter the *Mobile Station Control on the Traffic Channel State* as a result of processing Layer 3 fields of this message, the mobile station shall enter the *Mobile Station Control on the Traffic Channel State* only after Layer 3 receives an indication from Layer 2 that the acknowledgment to the message has been sent and acknowledged.
- The mobile station shall set RTC_NOM_PWR_USE_IND to '0'.
- The mobile station shall set DIRECT_CH_ASSIGN_RECOVER_IND_s to '0'.
- If the mobile station is in *Page Response Substate* and has sent[26] a *Page Response Message* or a *Reconnect Message* the mobile station shall set RESPOND_IND_s to '0'; otherwise the mobile station shall set RESPOND_IND_s to RESPOND_IND_r.
- If ASSIGN_$MODE_r$ equals '000', the mobile station shall perform the following actions:
  - The mobile station shall set CH_IND_s to '01'.
  - If $PACA_s$ is equal to enabled, the mobile station shall set $PACA_s$ to disabled and PACA_CANCEL to '0', shall disable the PACA state timer, and should indicate to the user that the PACA call has been canceled.
  - If GRANTED_$MODE_r$ equals '00', and the multiplex option and radio configuration specified in the DEFAULT_CONFIG field are not supported by the mobile station, the mobile station shall send a *Mobile Station Reject Order* with ORDQ field set to '00000110' (capability not supported by the mobile station) and shall remain in the current state[27].

---

[26] A message is considered sent when the mobile station transmits the message at least once, no matter whether the L2 acknowledgment is received or not.

[27] The current state may be *Page Response Substate* or *Mobile Station Idle State*. The mobile station remains in the state in which *Extended Channel Assignment Message* is received.

- If $GRANTED\_MODE_r$ is equal to '00' and $DEFAULT\_CONFIG_r$ is not equal to '100', the mobile station shall send a *Mobile Station Reject Order* with ORDQ field set to '00001110' (RC does not match with $DEFAULT\_CONFIG_r$) and shall remain in the current state if any of the following conditions is true:
  - $FOR\_FCH\_RC_r$ is not equal to the RC associated with $DEFAULT\_CONFIG_r$ (see Table 3.7.2.3.2.21-2).
  - $REV\_FCH\_RC_r$ is not equal to the RC associated with $DEFAULT\_CONFIG_r$ (see Table 3.7.2.3.2.21-2).
- If the mobile station does not support either of the Fundamental Channel Radio Configurations (FOR_FCH_RC or REV_FCH_RC), the mobile shall send a *Mobile Station Reject Order* with the ORDQ field set to '00000110' (capability not supported by the mobile station) and remain in the current state.
- If $PLCM\_TYPE_r$ equals '0010' and IMSI_O is derived from IMSI_T, or if $PLCM\_TYPE_r$ equals '0011' and IMSI_O is derived from IMSI_M, the mobile station station shall send a *Mobile Station Reject Order* with the ORDQ field set to '00011100' (PLCM_TYPE mismatch) and remain in the current state.
- If $P\_REV\_IN\_USE_s$ is equal to or greater than 6, the mobile station shall store the Forward Fundamental Channel Radio Configuration ($FOR\_FCH\_RC_s = FOR\_FCH\_RC_r$) and the Reverse Fundamental Channel Radio Configuration ($REV\_FCH\_RC_s = REV\_FCH\_RC_r$).
- If $FREQ\_INCL_r$ equals '0', and the band class is supported by the mobile station, the mobile station shall perform the following actions:
  - The mobile station shall store the frame offset ($FRAME\_OFFSET_s = FRAME\_OFFSET_r$); the message encryption mode indicator ($ENCRYPT\_MODE_s = ENCRYPT\_MODE_r$); the bypass indicator ($BYPASS\_ALERT\_ANSWER_s = BYPASS\_ALERT\_ANSWER_r$); the granted mode ($GRANTED\_MODE_s = GRANTED\_MODE_r$); the default configuration ($DEFAULT\_CONFIG_s = DEFAULT\_CONFIG_r$); and the occurrences of PILOT_PN and PWR_COMB for each included member of the Active Set.
  - The mobile station shall perform the procedures in 2.6.11.2.
  - If C_SIG_ENCRYPT_MODE is included, the mobile station shall set $C\_SIG\_ENCRYPT\_MODE_s$ to $C\_SIG\_ENCRYPT\_MODE_r$.
  - The mobile station shall initialize CODE_CHAN_LIST as described in 2.6.8, and shall set $SERV\_NEG_s$ to enabled.

+ The mobile station shall set $FPC\_FCH\_INIT\_SETPT_s$ to $FPC\_FCH\_INIT\_SETPT_r$, $FPC\_FCH\_CURR\_SETPT_s$ to $FPC\_FCH\_INIT\_SETPT_s$, $FPC\_FCH\_FER_s$ to $FPC\_FCH\_FER_r$, $FPC\_FCH\_MIN\_SETPT_s$ to $FPC\_FCH\_MIN\_SETPT_r$, $FPC\_FCH\_MAX\_SETPT_s$ to $FPC\_FCH\_MAX\_SETPT_r$, and $FPC\_PRI\_CHAN_s$ to '0' if the mobile station supports any Radio Configuration greater than 2.
+ The mobile station shall set $FPC\_SUBCHAN\_GAIN_s$ to $FPC\_SUBCHAN\_GAIN_r$.
+ The mobile station shall set $RLGAIN\_ADJ_s$ to $RLGAIN\_ADJ_r$.
+ The mobile station shall set $REV\_FCH\_GATING\_MODE_s$ to $REV\_FCH\_GATING\_MODE_r$.
+ The mobile station shall set $REV\_PWR\_CNTL\_DELAY_s$ to $REV\_PWR\_CNTL\_DELAY_r$ if $REV\_PWR\_CNTL\_DELAY\_INCL_r$ is equal to '1'.
+ The mobile station shall set $PLCM\_TYPE_s$ to $PLCM\_TYPE_r$ if $PLCM\_TYPE\_INCL_r$ is equal to '1'; otherwise, the mobile station shall set $PLCM\_TYPE_s$ as follows:
  - If $P\_REV\_IN\_USE_s$ is less than 11, set $PLCM\_TYPE_s$ to '0000'; otherwise set $PLCM\_TYPE_s$ to '0100'.
+ The mobile station shall set $PLCM\_39_s$ to $PLCM\_39_r$ if $PLCM\_TYPE_r$ is equal to '0001'.
+ If the mobile station is currently monitoring the Paging Channel, the mobile station shall set IDLE_BCCH_CHAN to '0'; otherwise, the mobile station shall set IDLE_BCCH_CHAN to '1'. The mobile station shall set IDLE_CDMA_CHAN to $CDMACH_s$, IDLE_CDMABAND to $CDMABAND_s$, IDLE_SID to SID_s, IDLE_NID to NID_s, and IDLE_P_REV to P_REV_s.
+ The mobile station shall then enter the *Traffic Channel Initialization Substate* of the *Mobile Station Control on the Traffic Channel State*.

– If $FREQ\_INCL_r$ equals '1', and the band class is not supported by the mobile station, the mobile station shall send a *Mobile Station Reject Order* with ORDQ field set to '00000110' (capability not supported by the mobile station) and remain in the current state.

– If $FREQ\_INCL_r$ equals '1', and the band class is supported by the mobile station, the mobile station shall perform the following actions:

+ The mobile station shall store the frame offset ($FRAME\_OFFSET_s$ = $FRAME\_OFFSET_r$); the message encryption mode indicator ($ENCRYPT\_MODE_s$ = $ENCRYPT\_MODE_r$); the bypass indicator ($BYPASS\_ALERT\_ANSWER_s$ = $BYPASS\_ALERT\_ANSWER_r$); the granted mode ($GRANTED\_MODE_s$ = $GRANTED\_MODE_r$); the default configuration ($DEFAULT\_CONFIG_s$ = $DEFAULT\_CONFIG_r$); the idle Frequency Assignment (IDLE_CDMA_CHAN = $CDMACH_s$); the idle band class (IDLE_CDMABAND = $CDMABAND_s$); the band class ($CDMABAND_s$ = $BAND\_CLASS_r$); the Frequency Assignment ($CDMACH_s$ = $CDMA\_FREQ_r$); and the occurrences of PILOT_PN and PWR_COMB_IND for each included member of the Active Set.

+ The mobile station shall perform the procedures in 2.6.11.2.

+ The mobile station shall set $FPC\_FCH\_INIT\_SETPT_s$ to $FPC\_FCH\_INIT\_SETPT_r$, $FPC\_FCH\_CURR\_SETPT_s$ to $FPC\_FCH\_INIT\_SETPT_s$, $FPC\_FCH\_FER_s$ to $FPC\_FCH\_FER_r$, $FPC\_FCH\_MIN\_SETPT_s$ to $FPC\_FCH\_MIN\_SETPT_r$, $FPC\_FCH\_MAX\_SETPT_s$ to $FPC\_FCH\_MAX\_SETPT_r$, and $FPC\_PRI\_CHAN_s$ to ‘0’ if the mobile station supports any Radio Configuration greater than 2.

+ The mobile station shall set $FPC\_SUBCHAN\_GAIN_s$ to $FPC\_SUBCHAN\_GAIN_r$.

+ The mobile station shall set $RLGAIN\_ADJ_s$ to $RLGAIN\_ADJ_r$.

+ The mobile station shall set $REV\_FCH\_GATING\_MODE_s$ to $REV\_FCH\_GATING\_MODE_r$.

+ The mobile station shall set $REV\_PWR\_CNTL\_DELAY_s$ to $REV\_PWR\_CNTL\_DELAY_r$ if $REV\_PWR\_CNTL\_DELAY\_INCL_r$ is equal to ‘1’.

+ The mobile station shall set $PLCM\_TYPE_s$ to $PLCM\_TYPE_r$ if $PLCM\_TYPE\_INCL_r$ is equal to ‘1’; otherwise, the mobile station shall set $PLCM\_TYPE_s$ as follows:

  - If $P\_REV\_IN\_USE_s$ is less than 11, set $PLCM\_TYPE_s$ to ‘0000’; otherwise set $PLCM\_TYPE_s$ to ‘0100’.

+ The mobile station shall set $PLCM\_39_s$ to $PLCM\_39_r$ if $PLCM\_TYPE_r$ is equal to ‘0001’.

+ The mobile station shall initialize CODE_CHAN_LIST as described in 2.6.8, and shall set $SERV\_NEG_s$ to enabled.

+ If the mobile station is currently monitoring the Paging Channel, the mobile station shall set IDLE_BCCH_CHAN to ‘0’; otherwise, the mobile station shall set IDLE_BCCH_CHAN to ‘1’. The mobile station shall set IDLE_SID to SID_s, IDLE_NID to NID_s, and IDLE_P_REV to P_REV_s.

+ The mobile station shall then tune to the new Frequency Assignment and shall enter the *Traffic Channel Initialization Substate* of the *Mobile Station Control on the Traffic Channel State*.

- If $ASSIGN\_MODE_r$ equals '001', the mobile station shall perform the following actions:
  - If $FREQ\_INCL_r$ equals '0', the mobile station shall perform the following actions:
    + If the message requires acknowledgment, the mobile station shall wait until Layer 3 receives an indication from Layer 2 that the acknowledgment to the message has been sent and acknowledged.
    + The mobile station shall set $CONFIG\_MSG\_SEQ_s$ and $ACC\_MSG\_SEQ_s$ to NULL (see 2.6.2.2) and shall set $PILOT\_PN_s$ to the pilot PN sequence offset of the strongest pilot in the list ($PILOT\_PN_r$).
    + If the mobile station has not stored configuration parameters for the Primary Paging Channel of the new base station, or if the stored information is not current (see 2.6.2.2), the mobile station shall set $SYS\_PAR\_MSG\_SEQ_s$, $NGHBR\_LST\_MSG\_SEQ_s$, $EXT\_NGHBR\_LST\_MSG\_SEQ_s$, $GEN\_NGHBR\_LST\_MSG\_SEQ_s$, $USER\_ZONE\_ID\_MSG\_SEQ_s$, $PRI\_NGHBR\_LST\_MSG\_SEQ_s$ $CHAN\_LST\_MSG\_SEQ_s$, $EXT\_CHAN\_LST\_MSG\_SEQ_s$, $FD\_CHAN\_LST\_MSG\_SEQ_s$ $EXT\_SYS\_PAR\_MSG\_SEQ_s$, $GLOB\_SERV\_REDIR\_MSG\_SEQ_s$, and $EXT\_GLOB\_SERV\_REDIR\_MSG\_SEQ_s$ to NULL.
    + The mobile station shall set $PAGE\_CHAN_s$ to '1' and $PAGECH_s$ to the Primary Paging Channel. If the mobile station was monitoring the Forward Common Control Channel, the mobile station shall set the $PRAT_s$ to '00'. The mobile station shall then begin monitoring the Primary Paging Channel of the selected base station.
    + If $RESPOND_r$ is equal to '1', the mobile station shall perform the following:
      - If the *Extended Channel Assignment Message* does not require an acknowledgment, the mobile station shall enter the *Update Overhead Information Substate* with a page response retransmission indication within T_{34m} seconds after receiving the *Extended Channel Assignment Message*.
      - If the *Extended Channel Assignment Message* requires an acknowledgment, the mobile station shall enter the *Update Overhead Information Substate* with a page response retransmission indication within T_{34m} seconds after Layer 3 receives an indication from Layer 2 that the acknowledgment to the *Extended Channel Assignment Message* has been sent and acknowledged.

+ If $RESPOND_r$ is equal to '0', the mobile station shall perform the following:
  - o If the *Extended Channel Assignment Message* does not require an acknowledgment, the mobile station shall enter the *Mobile Station Idle State* within T_{34m} seconds after receiving the *Extended Channel Assignment Message*.
  - o If the *Extended Channel Assignment Message* requires an acknowledgment, the mobile station shall enter the *Mobile Station Idle State* within T_{34m} seconds after Layer 3 receives an indication from Layer 2 that the acknowledgment to the *Extended Channel Assignment Message* has been sent and acknowledged.

– If $FREQ\_INCL_r$ equals '1', and the band class is not supported by the mobile station, the mobile station shall send a *Mobile Station Reject Order* with ORDQ field set to '00000110' (capability not supported by the mobile station) and remain in the current state.

– If $FREQ\_INCL_r$ equals '1', and the band class is supported by the mobile station, the mobile station shall perform the following actions:

+ If the message requires acknowledgment, the mobile station shall wait until Layer 3 receives an indication from Layer 2 that the acknowledgment to the message has been sent and acknowledged.

+ The mobile station shall set $CDMACH_s$ to $CDMA\_FREQ_r$ and $CDMABAND_s$ to $BAND\_CLASS_r$. Then the mobile station shall tune to the new Frequency Assignment, measure the strength of each pilot listed in the assignment using the Neighbor Set search procedures specified in 2.6.6.2.1 and 2.6.6.2.2, set $PILOT\_PN_s$ to the pilot PN sequence offset of the strongest pilot in the list ($PILOT\_PN_r$), and set $CONFIG\_MSG\_SEQ_s$ and $ACC\_MSG\_SEQ_s$ to NULL (see 2.6.2.2).

+ If the mobile station has not stored configuration parameters for the Primary Paging Channel of the new base station, or if the stored information is not current (see 2.6.2.2), the mobile station shall set $SYS\_PAR\_MSG\_SEQ_s$, $NGHBR\_LST\_MSG\_SEQ_s$, $EXT\_NGHBR\_LST\_MSG\_SEQ_s$, $GEN\_NGHBR\_LST\_MSG\_SEQ_s$, $USER\_ZONE\_ID\_MSG\_SEQ_s$, $PRI\_NGHBR\_LST\_MSG\_SEQ_s$ $CHAN\_LST\_MSG\_SEQ_s$, $EXT\_CHAN\_LST\_MSG\_SEQ_s$, $FD\_CHAN\_LST\_MSG\_SEQ_s$, $EXT\_SYS\_PAR\_MSG\_SEQ_s$, $GLOB\_SERV\_REDIR\_MSG\_SEQ_s$, and $EXT\_GLOB\_SERV\_REDIR\_MSG\_SEQ_s$ to NULL.

+ The mobile station shall set $PAGE\_CHAN_s$ to '1' and $PAGECH_s$ to the Primary Paging Channel. If the mobile station was monitoring Forward Common Control Channel, the mobile station shall set the $PRAT_s$ to '00'. The mobile station shall then begin monitoring the Primary Paging Channel of the selected base station.

+ If $RESPOND_r$ is equal to '1', the mobile station shall perform the following:
    - o If the *Extended Channel Assignment Message* does not require an acknowledgment, the mobile station shall enter the *Update Overhead Information Substate* with a page response retransmission indication within T_{34m} seconds after receiving the *Extended Channel Assignment Message*.
    - o If the *Extended Channel Assignment Message* requires an acknowledgment, the mobile station shall enter the *Update Overhead Information Substate* with a page response retransmission indication within T_{34m} seconds after Layer 3 receives an indication from Layer 2 that the acknowledgment to the *Extended Channel Assignment Message* has been sent and acknowledged.
+ If $RESPOND_r$ is equal to '0', the mobile station shall perform the following:
    - o If the *Extended Channel Assignment Message* does not require an acknowledgment, the mobile station shall enter the *Mobile Station Idle State* within T_{34m} seconds after receiving the *Extended Channel Assignment Message*.
    - o If the *Extended Channel Assignment Message* requires an acknowledgment, the mobile station shall enter the *Mobile Station Idle State* within T_{34m} seconds after Layer 3 receives an indication from Layer 2 that the acknowledgment to the *Extended Channel Assignment Message* has been sent and acknowledged.

- If $ASSIGN\_MODE_r$ equals '100', the mobile station shall perform the following actions:
  - – If $PACA_s$ is equal to enabled, the mobile station shall set $PACA_s$ to disabled and PACA_CANCEL to '0', shall disable the PACA state timer, and should indicate to the user that the PACA call has been canceled.
  - – If $GRANTED\_MODE_r$ equals '00' and the multiplex option and radio configuration specified in the $DEFAULT\_CONFIG_r$ field are not supported by the mobile station, the mobile station shall send a *Mobile Station Reject Order* with ORDQ field set to '00000110' (capability not supported by the mobile station) and shall remain in the current state.
  - – If $GRANTED\_MODE_r$ equals '11', $P\_REV\_IN\_USE_s$ is less than 11, and the mobile station did not include a SYNC_ID field in the *Page Response Message* or *Reconnect Message* that was transmitted in this substate, the mobile station shall send a *Mobile Station Reject Order* with ORDQ field set to '00000110' (capability not supported by the mobile station) and shall remain in the current state.

– If $SYNC\_ID\_INCL_r$ is included and equals ‘1’, and the mobile station does not have a stored service configuration corresponding to $SYNC\_ID_r$ for the current SID_s and NID_s pair, the mobile station shall send a *Mobile Station Reject Order* with ORDQ field set to ‘00011011’ (Requested stored service configuration is not available) and shall remain in the current state.

– If $GRANTED\_MODE_r$ equals ‘11’, $SR\_ID\_RESTORE_r$ is not equal to ‘111’, and a service option connection record corresponding to $SR\_ID\_RESTORE_r$ is not contained in the stored service configuration, the mobile station shall send a *Mobile Station Reject Order* with ORDQ field set to ‘00000110’ (capability not supported by the mobile station) and shall remain in the current state.

– If $GRANTED\_MODE_r$ equals ‘00’ and $DEFAULT\_CONFIG_r$ is not equal to ‘100’, the mobile station shall send a *Mobile Station Reject Order* with ORDQ field set to ‘00001110’ (RC does not match with DEFAULT_CONFIG) and shall remain in the current state if one of the following conditions is true:

  + FOR_RC_r is not equal to the RC associated with $DEFAULT\_CONFIG_r$ as specified in Table 3.7.2.3.2.21-2.

  + REV_RC_r is not equal to the RC associated with $DEFAULT\_CONFIG_r$ as specified in Table 3.7.2.3.2.21-2.

– If the mobile station does not support either of the Radio Configurations (FOR_RC or REV_RC), the mobile station shall send a *Mobile Station Reject Order* with the ORDQ field set to ‘00000110’ (capability not supported by the mobile station) and remain in the current state.

– If CH_IND_r = ‘01’ and the mobile station does not support Fundamental Channel, the mobile station shall send a *Mobile Station Reject Order* with the ORDQ field set to ‘00000110’ (capability not supported by the mobile station) and remain in the current state.

– If CH_IND_r = ‘10’ and the mobile station does not support the Dedicated Control Channel, the mobile station shall send a *Mobile Station Reject Order* with the ORDQ field set to ‘00000110’ (capability not supported by the mobile station) and remain in the current state.

– If CH_IND_r = ‘11’ and the mobile station does not support the Dedicated Control Channel and Fundamental Channel concurrently, the mobile station shall send a *Mobile Station Reject Order* with the ORDQ field set to ‘00000110’ (capability not supported by the mobile station) and remain in the current state.

– If $FREQ\_INCL_r$ equals ‘1’ and if the band class ($BAND\_CLASS_r$) is not supported by the mobile station, the mobile station shall send a *Mobile Station Reject Order* with ORDQ field set to ‘00000110’ (capability not supported by the mobile station) and remain in the current state.

- If $PLCM\_TYPE_r$ equals '0010' and IMSI_O is derived from IMSI_T, or if $PLCM\_TYPE_r$ equals '0011' and IMSI_O is derived from IMSI_M, the mobile station shall send a *Mobile Station Reject Order* with the ORDQ field set to '00011100' (PLCM_TYPE mismatch) and remain in the current state.
- If $FUNDICATED\_BCMC\_IND_r$ equals '1', and the mobile station does not support BCMC reception on the Forward Fundicated Channels assigned in this message, the mobile station shall send a *Mobile Station Reject Order* with the ORDQ field set to '00000110' (capability not supported by the mobile station) and remain in the current state.
- If the mobile station does not send a Mobile Station Reject Order as specified above, it shall continue to perform the actions specified below.
- The mobile station shall set
  - IDLE_CDMABAND = $CDMABAND_s$
  - IDLE_CDMACH = $CDMACH_s$
- If $FREQ\_INCL_r$ equals '1', the mobile station shall set
  - $CDMABAND_s = BAND\_CLASS_r$
  - $CDMACH_s = CDMA\_FREQ_r$
- The mobile station shall store the bypass indicator ($BYPASS\_ALERT\_ANSWER_s = BYPASS\_ALERT\_ANSWER_r$).
- The mobile station shall store granted mode ($GRANTED\_MODE_s = GRANTED\_MODE_r$). If $GRANTED\_MODE_r$ equals '11', the mobile station shall perform the following:
  - The mobile station shall store the service reference to be restored ($SR\_ID\_RESTOREs = SR\_ID\_RESTORE_r$).
  - If $SR\_ID\_RESTORE_r$ equals '000', the mobile station shall store bitmap of service reference identifiers to be restored ($SR\_ID\_RESTORE\_BITMAP_s = SR\_ID\_RESTORE\_BITMAP_r$).
  - If $SYNC\_ID\_INCL_r$ is included and equals '1', the mobile station shall store the service configuration synchronization identifier ($SYNC\_ID_s = SYNC\_ID_r$).
- The mobile station shall store the default configuration ($DEFAULT\_CONFIG_s = DEFAULT\_CONFIG_r$).
- The mobile station shall store the Forward Traffic Channel Radio Configuration ($FOR\_RC_s = FOR\_RC_r$) and the Reverse Traffic Channel Radio Configuration ($REV\_RC_s = REV\_RC_r$).
- The mobile station shall store the frame offset ($FRAME\_OFFSET_s = FRAME\_OFFSET_r$).

- The mobile station shall store the message encryption mode indicator ($ENCRYPT\_MODE_s$ = $ENCRYPT\_MODE_r$).
- The mobile station shall perform the procedures in 2.6.11.2.
- The mobile station shall store the Forward power control subchannel relative gain [$FPC\_SUBCHAN\_GAIN_s$ = $FPC\_SUBCHAN\_GAIN_r$).
- The mobile station shall set $RLGAIN\_ADJ_s$ to $RLGAIN\_ADJ_r$.
- The mobile station shall set $PLCM\_TYPE_s$ to $PLCM\_TYPE_r$ if $PLCM\_TYPE\_INCL_r$ is equal to '1'; otherwise, the mobile station shall set $PLCM\_TYPE_s$ as follows:
  - If $P\_REV\_IN\_USE_s$ is less than 11, set $PLCM\_TYPE_s$ to '0000'; otherwise set $PLCM\_TYPE_s$ to '0100'.
- The mobile station shall set $PLCM\_39_s$ to $PLCM\_39_r$ if $PLCM\_TYPE_r$ is equal to '0001'.
- If $FIXED\_PREAMBLE\_TRANSMIT\_IND_r$ is included, the mobile station shall set $FIXED\_PREAMBLE\_TRANSMIT\_IND_s$ to $FIXED\_PREAMBLE\_TRANSMIT\_IND_r$; otherwise, the mobile station shall set $FIXED\_PREAMBLE\_TRANSMIT\_IND_s$ to '0'. If $FIXED\_PREAMBLE\_TRANSMIT\_IND_s$ equals '1', the mobile station shall set $FIXED\_NUM\_PREAMBLE_s$ to $FIXED\_NUM\_PREAMBLE_r$.
- The mobile station shall set $REV\_FCH\_GATING\_MODE_s$ to $REV\_FCH\_GATING\_MODE_r$.
- The mobile station shall set $REV\_PWR\_CNTL\_DELAY_s$ to $REV\_PWR\_CNTL\_DELAY_r$ if $REV\_PWR\_CNTL\_DELAY\_INCL_r$ is equal to '1'.
- If $3XFL\_1XRL\_INCL_r$ is equal to '1', the mobile station shall set $1XRL\_FREQ\_OFFSET_s$ to $1XRL\_FREQ\_OFFSET_r$.
- If $DIRECT\_CH\_ASSIGN\_IND_r$ is equal to '1', the mobile station shall perform the following:
  - The mobile station shall set $RTC\_NOM\_PWR_s$ to $RTC\_NOM\_PWR_r$.
  - If the mobile station has not received confirmation of delivery of the *Page Response Message* or the *Reconnect Message* sent in this substate, the mobile station shall perform the following:
    - Set RTC_NOM_PWR_USE_IND to '1'.
    - Set $DIRECT\_CH\_ASSIGN\_RECOVER\_IND_s$ to $DIRECT\_CH\_ASSIGN\_RECOVER\_IND_r$
- The mobile station shall set $EARLY\_RL\_TRANSMIT\_IND_s$ to $EARLY\_RL\_TRANSMIT\_IND_r$.
- If $TX\_PWR\_LIMIT\_INCL_r$ is set to '1', the mobile station shall perform the following:

+ If the mobile station is being assigned to operate in the 1915MHz – 1920MHz block of the PCS band, the mobile station shall store the transmit power limit $TX\_PWR\_LIMIT_S$ = ($TX\_PWR\_LIMIT_r$ - 30dB);
+ Otherwise, the mobile station shall set $TX\_PWR\_LIMIT_S$ to the limit defined in [11] for the target base station.

– The mobile station shall store the channel indicator ($CH\_IND_S = CH\_IND_r$) and the mobile station shall perform the following actions:
  + If CH_IND_r equals '01', the mobile station shall set $FPC\_FCH\_INIT\_SETPT_S$ to $FPC\_FCH\_INIT\_SETPT_r$, $FPC\_FCH\_CURR\_SETPT_S$ to $FPC\_FCH\_INIT\_SETPT_S$, $FPC\_FCH\_FER_S$ to $FPC\_FCH\_FER_r$, $FPC\_FCH\_MIN\_SETPT_S$ to $FPC\_FCH\_MIN\_SETPT_r$, $FPC\_FCH\_MAX\_SETPT_S$ to $FPC\_FCH\_MAX\_SETPT_r$, and $FPC\_PRI\_CHAN_S$ to '0' if the mobile station supports any Radio Configuration greater than 2. Then for each included member of the Active Set, the mobile station shall store the following:
    - Set the PILOT_PN field to $PILOT\_PN_r$.
    - Set the ADD_PILOT_REC_INCL field to $ADD\_PILOT\_REC\_INCL_r$. If $ADD\_PILOT\_REC\_INCL_r$ equals '1', the mobile station shall store the following:
      - Set the PILOT_REC_TYPE field of PILOT_REC to $PILOT\_REC\_TYPE_r$.
      - If $PILOT\_REC\_TYPE_r$ equals '000', the mobile station shall set the TD_POWER_LEVEL field of PILOT_REC to $TD\_POWER\_LEVEL_r$ and set the TD_MODE field of PILOT_REC to TD_MODE_r.
      - If $PILOT\_REC\_TYPE_r$ is equal to '001', the mobile station shall.
        - Set the AUX_PILOT_QOF field of PILOT_REC to QOF_r.
        - Set the AUX_PILOT_WALSH_CODE field of PILOT_REC to $AUX\_PILOT\_WALSH_r$ with the Walsh Code length specified by $WALSH\_LENGTH_r$.
      - If $PILOT\_REC\_TYPE_r$ is equal to '010', the mobile station shall:
        - Set the AUX_PILOT_TD_QOF field of PILOT_REC to QOF_r.
        - Set the AUX_PILOT_WALSH_CODE field of PILOT_REC to AUX_WALSH_r with the Walsh Code length specified by $WALSH\_LENGTH_r$.
        - Set the AUX_TD_POWER_LEVEL field of PILOT_REC to $AUX\_TD\_POWER\_LEVEL_r$.
        - Set the TD_MODE field of NGHBR_PILOT_REC to TD_MODE_r.
      - If $PILOT\_REC\_TYPE_r$ is equal to '011', the mobile station shall:
        - Set the SR3_PRIMARY_PILOT field of PILOT_REC to $SR3\_PRIMARY\_PILOT_r$.

– Set the SR3_PILOT_POWER1 field of PILOT_REC to $SR3\_PILOT\_POWER1_r$.

– Set the SR3_PILOT_POWER2 field of PILOT_REC to $SR3\_PILOT\_POWER2_r$.

◊ If $PILOT\_REC\_TYPE_r$ is equal to '100', the mobile station shall:

– Set the SR3_PRIMARY_PILOT field of PILOT_REC to $SR3\_PRIMARY\_PILOT_r$.

– Set the SR3_PILOT_POWER1 field of PILOT_REC to $SR3\_PILOT\_POWER1_r$.

– Set the SR3_PILOT_POWER2 field of PILOT_REC to $SR3\_PILOT\_POWER2_r$.

– Set the AUX_PILOT_QOF field of PILOT_REC to QOF_r.

– Set the AUX_PILOT_WALSH_CODE field of PILOT_REC to $AUX\_PILOT\_WALSH_r$ with the Walsh Code length specified by $WALSH\_LENGTH_r$.

– If $ADD\_INFO\_INCL1_r$ is equal to '1', set the AUX_PILOT_QOF1 field of PILOT_REC to $QOF1_r$ and set the AUX_PILOT_WALSH_CODE1 field of PILOT_REC to $AUX\_PILOT\_WALSH1_r$ with the Walsh Code length specified by $WALSH\_LENGTH1_r$.

– Otherwise, set the AUX_PILOT_QOF1 field of PILOT_REC to QOF_r and set the AUX_PILOT_WALSH_CODE1 field of PILOT_REC to $AUX\_PILOT\_WALSH_r$ with the Walsh Code length specified by $WALSH\_LENGTH_r$.

– If $ADD\_INFO\_INCL2_r$ is equal to '1', set the AUX_PILOT_QOF2 field of PILOT_REC to $QOF2_r$ and set the AUX_PILOT_WALSH_CODE2 field of PILOT_REC to $AUX\_PILOT\_WALSH2_r$ with the Walsh Code length specified by $WALSH\_LENGTH2_r$.

– Otherwise, set the AUX_PILOT_QOF2 field of PILOT_REC to QOF_r and set the AUX_PILOT_WALSH_CODE2 field of PILOT_REC to $AUX\_PILOT\_WALSH_r$ with the Walsh Code length specified by $WALSH\_LENGTH_r$.

o Set the PWR_COMB_IND field to $PWR\_COMB\_IND_r$.

o Set the CODE_CHAN_FCH field to $CODE\_CHAN\_FCH_r$.

o Set the QOF_MASK_ID_FCH field to $QOF\_MASK\_ID\_FCH_r$.

+ If CH_IND_r equals '01' and $3X\_FCH\_INFO\_INCL_r$ equals '1', for each included member of the Active Set, the mobile station store the following:

- o If $3X\_FCH\_LOW\_INCL_r$ equals '1', set the QOF_MASK_ID_FCH_LOW field to $QOF\_MASK\_ID\_FCH\_LOW_r$ and the CODE_CHAN_FCH_LOW field to $CODE\_CHAN\_FCH\_LOW_r$. Otherwise, set the QOF_MASK_ID_FCH_LOW field to $QOF\_MASK\_ID\_FCH_r$ and the CODE_CHAN_FCH_LOW to $CODE\_CHAN\_FCH_r$.
- o If $3X\_FCH\_HIGH\_INCL_r$ equals '1', set the QOF_MASK_ID_FCH_HIGH field to $QOF\_MASK\_ID\_FCH\_HIGH_r$ and the CODE_CHAN_FCH_HIGH field to $CODE\_CHAN\_FCH\_HIGH_r$. Otherwise, set the QOF_MASK_ID_FCH_HIGH field to $QOF\_MASK\_ID\_FCH_r$ and the CODE_CHAN_FCH_HIGH to $CODE\_CHAN\_FCH_r$.

+ If CH_IND_r equals '10', the mobile station shall set $FPC\_DCCH\_INIT\_SETPT_s$ to $FPC\_DCCH\_INIT\_SETPT_r$, $FPC\_DCCH\_CURR\_SETPT_s$ to $FPC\_DCCH\_INIT\_SETPT_s$, $FPC\_DCCH\_FER_s$ to $FPC\_DCCH\_FER_r$, $FPC\_DCCH\_MIN\_SETPT_s$ to $FPC\_DCCH\_MIN\_SETPT_r$, $FPC\_DCCH\_MAX\_SETPT_s$ to $FPC\_DCCH\_MAX\_SETPT_r$, $FUNDICATED\_BCMC\_IND_s$ to $FUNDICATED\_BCMC\_IND_r$, and $FPC\_PRI\_CHAN_s$ to '1' if the mobile station supports any Radio Configuration greater than 2. Then for each included member of the Active Set, the mobile station shall store the following:

  - o Set the PILOT_PN to $PILOT\_PN_r$.
  - o Set the ADD_PILOT_REC_INCL field to $ADD\_PILOT\_REC\_INCL_r$. If ADD_PILOT_REC_INCL is equal to '1', the mobile station shall store the following:
    - ◊ Set the PILOT_REC_TYPE field of PILOT_REC to $PILOT\_REC\_TYPE_r$.
    - ◊ If $PILOT\_REC\_TYPE_r$ equals '000', the mobile station shall set the TD_POWER_LEVEL field of PILOT_REC to $TD\_POWER\_LEVEL_r$ and set the TD_MODE field of PILOT_REC to TD_MODE_r.
    - ◊ If $PILOT\_REC\_TYPE_r$ is equal to '001', the mobile station shall.
      - – Set the AUX_PILOT_QOF field of PILOT_REC to QOF_r.
      - – Set the AUX_PILOT_WALSH_CODE field of PILOT_REC to $AUX\_PILOT\_WALSH_r$ with the Walsh Code length specified by $WALSH\_LENGTH_r$.
    - ◊ If $PILOT\_REC\_TYPE_r$ is equal to '010', the mobile station shall:
      - – Set the AUX_PILOT_TD_QOF field of PILOT_REC to QOF_r.
      - – Set the AUX_PILOT_WALSH_CODE field of PILOT_REC to AUX_WALSH_r with the Walsh Code length specified by $WALSH\_LENGTH_r$.
      - – Set the AUX_TD_POWER_LEVEL field of PILOT_REC to $AUX\_TD\_POWER\_LEVEL_r$.
      - – Set the TD_MODE field of PILOT_REC to TD_MODE_r.

◊ If $PILOT\_REC\_TYPE_r$ is equal to '011', the mobile station shall:

– Set the SR3_PRIMARY_PILOT field of PILOT_REC to $SR3\_PRIMARY\_PILOT_r$.

– Set the SR3_PILOT_POWER1 field of PILOT_REC to $SR3\_PILOT\_POWER1_r$.

– Set the SR3_PILOT_POWER2 field of PILOT_REC to $SR3\_PILOT\_POWER2_r$.

◊ If $PILOT\_REC\_TYPE_r$ is equal to '100', the mobile station shall:

– Set the SR3_PRIMARY_PILOT field of PILOT_REC to $SR3\_PRIMARY\_PILOT_r$.

– Set the SR3_PILOT_POWER1 field of PILOT_REC to $SR3\_PILOT\_POWER1_r$.

– Set the SR3_PILOT_POWER2 field of PILOT_REC to $SR3\_PILOT\_POWER2_r$.

– Set the AUX_PILOT_QOF field of PILOT_REC to QOF_r.

– Set the AUX_PILOT_WALSH_CODE field of PILOT_REC to $AUX\_PILOT\_WALSH_r$ with the Walsh Code length specified by $WALSH\_LENGTH_r$.

– If $ADD\_INFO\_INCL1_r$ is equal to '1', set the AUX_PILOT_QOF1 field of PILOT_REC to $QOF1_r$ and set the AUX_PILOT_WALSH_CODE1 field of PILOT_REC to $AUX\_PILOT\_WALSH1_r$ with the Walsh Code length specified by $WALSH\_LENGTH1_r$.

– Otherwise, set the AUX_PILOT_QOF1 field of PILOT_REC to QOF_r and set the AUX_PILOT_WALSH_CODE1 field of PILOT_REC to $AUX\_PILOT\_WALSH_r$ with the Walsh Code length specified by $WALSH\_LENGTH_r$.

– If $ADD\_INFO\_INCL2_r$ is equal to '1', set the AUX_PILOT_QOF2 field of PILOT_REC to $QOF2_r$ and set the AUX_PILOT_WALSH_CODE2 field of PILOT_REC to $AUX\_PILOT\_WALSH2_r$ with the Walsh Code length specified by $WALSH\_LENGTH2_r$.

– Otherwise, set the AUX_PILOT_QOF2 field of PILOT_REC to QOF_r and set the AUX_PILOT_WALSH_CODE2 field of PILOT_REC to $AUX\_PILOT\_WALSH_r$ with the Walsh Code length specified by $WALSH\_LENGTH_r$.

o Set the PWR_COMB_IND field to $PWR\_COMB\_IND_r$.

o Set the CODE_CHAN_FCH field to $CODE\_CHAN\_FCH_r$.

o Set the QOF_MASK_ID_FCH field to $QOF\_MASK\_ID\_FCH_r$.

- Set the DCCH_INCL field to $DCCH\_INCL_r$. If $DCCH\_INCL_r$ equals '1', the mobile station shall store the following:
  - Set the CODE_CHAN_DCCH field to $CODE\_CHAN\_DCCH_r$.
  - Set the QOF_MASK_ID_DCCH field to $QOF\_MASK\_ID\_DCCH_r$.

+ If CH_IND_r equals '10' and $3X\_DCCH\_INFO\_INCL_r$ equals '1', for each included member of the Active Set, the mobile station store the following:
  - If $3X\_DCCH\_LOW\_INCL_r$ equals '1', set the QOF_MASK_ID_DCCH_LOW field to $QOF\_MASK\_ID\_DCCH\_LOW_r$ and the CODE_CHAN_DCCH_LOW field to $CODE\_CHAN\_DCCH\_LOW_r$. Otherwise, set the QOF_MASK_ID_DCCH_LOW field to $QOF\_MASK\_ID\_FCH_r$ and the CODE_CHAN_DCCH_LOW to $CODE\_CHAN\_FCH_r$.
  - If $3X\_DCCH\_HIGH\_INCL_r$ equals '1', set the QOF_MASK_ID_DCCH_HIGH field to $QOF\_MASK\_ID\_DCCH\_HIGH_r$ and the CODE_CHAN_DCCH_HIGH field to $CODE\_CHAN\_DCCH\_HIGH_r$. Otherwise, set the QOF_MASK_ID_DCCH_HIGH field to $QOF\_MASK\_ID\_FCH_r$ and the CODE_CHAN_DCCH_HIGH to $CODE\_CHAN\_FCH_r$.

+ If CH_IND_r equals '10', and $FUNDICATED\_BCMC\_IND_r$ equals '1', for each included member of the Active Set, the mobile station shall store the following:
  - Set $FOR\_CPCCH\_WALSH_s$ to $FOR\_CPCCH\_WALSH_r$.
  - Set FOR_CPCSCH_s to FOR_CPCSCH_r.

+ If CH_IND_r equals '11', the mobile station shall set $FPC\_FCCH\_INIT\_SETPT_s$ to $FPC\_FCH\_INIT\_SETPT_r$, $FPC\_FCH\_CURR\_SETPT_s$ to $FPC\_FCH\_INIT\_SETPT_s$, $FPC\_FCH\_FER_s$ to $FPC\_FCH\_FER_r$, $FPC\_FCH\_MIN\_SETPT_s$ to $FPC\_FCH\_MIN\_SETPT_r$, $FPC\_FCH\_MAX\_SETPT_s$ to $FPC\_FCH\_MAX\_SETPT_r$, $FPC\_DCCH\_INIT\_SETPT_s$ to $FPC\_DCCH\_INIT\_SETPT_r$, $FPC\_DCCH\_CURR\_SETPT_s$ to $FPC\_DCCH\_INIT\_SETPT_s$, $FPC\_DCCH\_FER_s$ to $FPC\_DCCH\_FER_r$, $FPC\_DCCH\_MIN\_SETPT_s$ to $FPC\_DCCH\_MIN\_SETPT_r$, $FPC\_DCCH\_MAX\_SETPT_s$ to $FPC\_DCCH\_MAX\_SETPT_r$, $FPC\_PRI\_CHAN_s$ to $FPC\_PRI\_CHAN_r$, and $FUNDICATED\_BCMC\_IND_s$ to $FUNDICATED\_BCMC\_IND_r$. Then for each included member of the Active Set, the mobile station shall store the following:
  - Set the PILOT_PN to $PILOT\_PN_r$.
  - Set the ADD_PILOT_REC_INCL field to ADD_PILOT_REC. If ADD_PILOT_REC_INCL is equal to '1', the mobile station shall store the following:
    - Set the PILOT_REC_TYPE field of PILOT_REC to $PILOT\_REC\_TYPE_r$.

- If $PILOT\_REC\_TYPE_r$ equals '000', the mobile station shall set the TD_POWER_LEVEL field of PILOT_REC to $TD\_POWER\_LEVEL_r$ and set the TD_MODE field of PILOT_REC to TD_MODE_r.
- If $PILOT\_REC\_TYPE_r$ is equal to '001', the mobile station shall:
  - Set the AUX_PILOT_QOF field of PILOT_REC to QOF_r.
  - Set the AUX_PILOT_WALSH_CODE field of PILOT_REC to $AUX\_PILOT\_WALSH_r$ with the Walsh Code length specified by $WALSH\_LENGTH_r$.
- If $PILOT\_REC\_TYPE_r$ is equal to '010', the mobile station shall:
  - Set the AUX_PILOT_TD_QOF field of PILOT_REC to QOF_r.
  - Set the AUX_PILOT_WALSH_CODE field of PILOT_REC to AUX_WALSH_r with the Walsh Code length specified by $WALSH\_LENGTH_r$.
  - Set the AUX_TD_POWER_LEVEL field of PILOT_REC to $AUX\_TD\_POWER\_LEVEL_r$.
  - Set the TD_MODE field of PILOT_REC to TD_MODE_r.
- If $PILOT\_REC\_TYPE_r$ is equal to '011', the mobile station shall:
  - Set the SR3_PRIMARY_PILOT field of PILOT_REC to $SR3\_PRIMARY\_PILOT_r$.
  - Set the SR3_PILOT_POWER1 field of PILOT_REC to $SR3\_PILOT\_POWER1_r$.
  - Set the SR3_PILOT_POWER2 field of PILOT_REC to $SR3\_PILOT\_POWER2_r$.
- If $PILOT\_REC\_TYPE_r$ is equal to '100', the mobile station shall:
  - Set the SR3_PRIMARY_PILOT field of PILOT_REC to $SR3\_PRIMARY\_PILOT_r$.
  - Set the SR3_PILOT_POWER1 field of PILOT_REC to $SR3\_PILOT\_POWER1_r$.
  - Set the SR3_PILOT_POWER2 field of PILOT_REC to $SR3\_PILOT\_POWER2_r$.
  - Set the AUX_PILOT_QOF field of PILOT_REC to QOF_r.
  - Set the AUX_PILOT_WALSH_CODE field of PILOT_REC to $AUX\_PILOT\_WALSH_r$ with the Walsh Code length specified by $WALSH\_LENGTH_r$.

- If $ADD\_INFO\_INCL1_r$ is equal to '1', set the AUX_PILOT_QOF1 field of PILOT_REC to $QOF1_r$ and set the AUX_PILOT_WALSH_CODE1 field of PILOT_REC to $AUX\_PILOT\_WALSH1_r$ with the Walsh Code length specified by $WALSH\_LENGTH1_r$.
- Otherwise, set the AUX_PILOT_QOF1 field of PILOT_REC to QOF_r and set the AUX_PILOT_WALSH_CODE1 field of PILOT_REC to $AUX\_PILOT\_WALSH_r$ with the Walsh Code length specified by $WALSH\_LENGTH_r$.
- If $ADD\_INFO\_INCL2_r$ is equal to '1', set the AUX_PILOT_QOF2 field of PILOT_REC to $QOF2_r$ and set the AUX_PILOT_WALSH_CODE2 field of PILOT_REC to $AUX\_PILOT\_WALSH2_r$ with the Walsh Code length specified by $WALSH\_LENGTH2_r$.
- Otherwise, set the AUX_PILOT_QOF2 field of PILOT_REC to QOF_r and set the AUX_PILOT_WALSH_CODE2 field of PILOT_REC to $AUX\_PILOT\_WALSH_r$ with the Walsh Code length specified by $WALSH\_LENGTH_r$.

o Set the PWR_COMB_IND field to $PWR\_COMB\_IND_r$.

o Set the CODE_CHAN_FCH field to $CODE\_CHAN\_FCH_r$.

o Set the QOF_MASK_ID_FCH field to $QOF\_MASK\_ID\_FCH_r$.

o Set the CODE_CHAN_DCCH field to $CODE\_CHAN\_DCCH_r$.

o Set the QOF_MASK_ID_DCCH field to QOF_MASK_ID_DCCH.

+ If CH_IND_r equals '11' and $3X\_FCH\_INFO\_INCL_r$ equals '1', for each included member of the Active Set, the mobile station store the following:

o If $3X\_FCH\_LOW\_INCL_r$ equals '1', set the QOF_MASK_ID_FCH_LOW field to $QOF\_MASK\_ID\_FCH\_LOW_r$ and the CODE_CHAN_FCH_LOW field to $CODE\_CHAN\_FCH\_LOW_r$. Otherwise, set the QOF_MASK_ID_FCH_LOW field to $QOF\_MASK\_ID\_FCH_r$ and the CODE_CHAN_FCH_LOW to $CODE\_CHAN\_FCH_r$.

o If $3X\_FCH\_HIGH\_INCL_r$ equals '1', set the QOF_MASK_ID_FCH_HIGH field to $QOF\_MASK\_ID\_FCH\_HIGH_r$ and the CODE_CHAN_FCH_HIGH field to $CODE\_CHAN\_FCH\_HIGH_r$. Otherwise, set the QOF_MASK_ID_FCH_HIGH field to $QOF\_MASK\_ID\_FCH_r$ and the CODE_CHAN_FCH_HIGH to $CODE\_CHAN\_FCH_r$.

+ If CH_IND_r equals '11' and $3X\_DCCH\_INFO\_INCL_r$ equals '1', for each included member of the Active Set, the mobile station store the following:

- o If $3X\_DCCH\_LOW\_INCL_r$ equals '1', set the QOF_MASK_ID_DCCH_LOW field to $QOF\_MASK\_ID\_DCCH\_LOW_r$ and the CODE_CHAN_DCCH_LOW field to $CODE\_CHAN\_DCCH\_LOW_r$. Otherwise, set the QOF_MASK_ID_DCCH_LOW field to $QOF\_MASK\_ID\_FCH_r$ and the CODE_CHAN_DCCH_LOW to $CODE\_CHAN\_FCH_r$.
- o If $3X\_DCCH\_HIGH\_INCL_r$ equals '1', set the QOF_MASK_ID_DCCH_HIGH field to $QOF\_MASK\_ID\_DCCH\_HIGH_r$ and the CODE_CHAN_DCCH_HIGH field to $CODE\_CHAN\_DCCH\_HIGH_r$. Otherwise, set the QOF_MASK_ID_DCCH_HIGH field to $QOF\_MASK\_ID\_FCH_r$ and the CODE_CHAN_DCCH_HIGH to $CODE\_CHAN\_FCH_r$.

+ If CH_IND_r equals '11' and $FUNDICATED\_BCMC\_IND_r$ equals '1', the mobile station shall store the following:
  - o Set $REV\_FCH\_ASSIGNED_s$ to $REV\_FCH\_ASSIGNED_r$.
+ If CH_IND_r equals '11' and $FUNDICATED\_BCMC\_IND_r$ equals '1', the mobile station shall set FCH_BCMC_IND to '1'; otherwise, the mobile station shall set FCH_BCMC_IND to '0'.
+ If CH_IND_r equals '11' and $FUNDICATED\_BCMC\_IND_r$ equals '1'and $FOR\_CPCCH\_INFO\_INCL_r$ is included and is set to '1', for each included member of the Active Set, the mobile station shall store the following:
  - o Set $FOR\_CPCCH\_WALSH_s$ to $FOR\_CPCCH\_WALSH_r$.
  - o Set FOR_CPCSCH_s to FOR_CPCSCH_r.
+ If CH_IND_r equals '11' and $FUNDICATED\_BCMC\_IND_r$ equals '1' and $ADD\_PLCM\_FOR\_FCH\_INCL_r$ is included and is set to '1', the mobile station shall store the following:
  - o Set $ADD\_PLCM\_FOR\_FCH\_TYPE_s$ to $ADD\_PLCM\_FOR\_FCH\_TYPE_r$.
  - o Set $ADD\_PLCM\_FOR\_FCH\_39_s$ to $ADD\_PLCM\_FOR\_FCH\_39_r$ if $ADD\_PLCM\_FOR\_FCH\_TYPE_r$ is equal to '1'.

– The mobile station shall initialize CODE_CHAN_LIST as described in 2.6.8, and shall set $SERV\_NEG_s$ to enabled.

– If the mobile station is currently monitoring the Paging Channel, the mobile station shall set IDLE_BCCH_CHAN to '0'; otherwise, the mobile station shall set IDLE_BCCH_CHAN to '1'. The mobile station shall set IDLE_SID to SID_s, IDLE_NID to NID_s, and IDLE_P_REV to P_REV_s.

– If $FREQ\_INCL_r$ equals '1', the mobile station shall then tune to the new frequency assignment.

– If $DIRECT\_CH\_ASSIGN\_IND_r$ is equal to '1' and $RESPOND\_IND_r$ is equal to '1', the mobile station shall perform the following:

+ If the mobile station is in *Mobile Station Idle State*, then the mobile station

shall enter the *Update Overhead Information Substate* of the *System Access State* (see 2.6.3.2) with a direct channel assignment respond indication within T_{33m} seconds after the *Extended Channel Assignment Message* is received; otherwise, the mobile station shall enter the *Page Response Substate* with a direct channel assignment respond indication.

Otherwise, the mobile station shall enter the *Traffic Channel Initialization Substate* of the *Mobile Station Control on the Traffic Channel State*.

- If $ASSIGN\_MODE_r$ equals '101', the mobile station shall perform the following actions:
  - If $PACA_s$ is equal to enabled, the mobile station shall set $PACA_s$ to disabled and PACA_CANCEL to '0', shall disable the PACA state timer, and should indicate to the user that the PACA call has been canceled.
  - If $GRANTED\_MODE_r$ equals '11', $P\_REV\_IN\_USE_s$ is less than 11, and the mobile station did not include a SYNC_ID field in the *Page Response Message* or *Reconnect Message* that was transmitted in this substate, the mobile station shall send a *Mobile Station Reject Order* with ORDQ field set to '00000110' (capability not supported by the mobile station) and shall remain in this state.
  - If $GRANTED\_MODE_r$ equals '11', $SR\_ID\_RESTORE_r$ is not equal to '111', and a service option connection record corresponding to $SR\_ID\_RESTORE_r$ or $SR\_ID\_RESTORE\_BITMAP_r$ is not contained in the stored service configuration, the mobile station shall send a *Mobile Station Reject Order* with ORDQ field set to '00000110' (capability not supported by the mobile station) and shall remain in the current state,.
  - If $SYNC\_ID\_INCL_r$ is included and equals '1', and the mobile station does not have stored service configuration corresponding to $SYNC\_ID_r$ for the current SID_s and NID_s pair, the mobile station shall send a *Mobile Station Reject Order* with ORDQ field set to '00011011' (Requested stored service configuration is not available) and shall remain in the current state.
  - If the mobile station does not support any of the specified Radio Configurations (FOR_PDCH_RC, FOR_FCH_DCCH_RC or REV_FCH_DCCH_RC), the mobile station shall send a *Mobile Station Reject Order* with the ORDQ field set to '00000110' (capability not supported by the mobile station) and remain in the current state.
  - If $EXT\_CH\_IND_r$ signals the allocation of a F-FCH or R-FCH and the mobile station does not support the Fundamental Channel, the mobile station shall send a *Mobile Station Reject Order* with the ORDQ field set to '00000110' (capability not supported by the mobile station) and remain in the current state.
  - If $EXT\_CH\_IND_r$ signals the allocation of a F-DCCH or R-DCCH and the mobile station does not support the Dedicated Control Channel, the mobile station shall send a *Mobile Station Reject Order* with the ORDQ field set to '00000110' (capability not supported by the mobile station) and remain in the current state.

- If $FREQ\_INCL_r$ equals '1' and if the band class ($BAND\_CLASS_r$) is not supported by the mobile station, the mobile station shall send a *Mobile Station Reject Order* with ORDQ field set to '00000110' (capability not supported by the mobile station) and remain in the current state.
- If $PLCM\_TYPE_r$ equals '0010' and IMSI_O is derived from IMSI_T, or if $PLCM\_TYPE_r$ equals '0011' and IMSI_O is derived from IMSI_M, the mobile station shall send a *Mobile Station Reject Order* with the ORDQ field set to '00011100' (PLCM_TYPE mismatch) and remain in the current state.
- If $FUNDICATED\_BCMC\_IND_r$ equals '1', and the mobile station does not support BCMC reception on the Forward Fundicated Channels assigned in this message, the mobile station shall send a *Mobile Station Reject Order* with the ORDQ field set to '00000110' (capability not supported by the mobile station) and remain in the current state.
- If the mobile station does not send a *Mobile Station Reject Order* as specified above, it shall continue to perform the actions specified below.
- Layer 3 shall send SIG-HandoffPDCH.Indication (handoff_type = ASSIGN) to the MAC layer.
- If $FREQ\_INCL_r$ equals '1', the mobile station shall set
  - $CDMABAND_s = BAND\_CLASS_r$
  - $CDMACH_s = CDMA\_FREQ_r$
- The mobile station shall store the bypass indicator ($BYPASS\_ALERT\_ANSWER_s = BYPASS\_ALERT\_ANSWER_r$).
- The mobile station shall store the granted mode indicator ($GRANTED\_MODE_s = GRANTED\_MODE_r$). Furthermore, if $GRANTED\_MODE_r$ equals '11', the mobile station shall store service reference to be restored ($SR\_ID\_RESTORE_s = SR\_ID\_RESTORE_r$).
- If $SR\_ID\_RESTORE_r$ equals '000', the mobile station shall store bitmap of service reference identifiers to be restored ($SR\_ID\_RESTORE\_BITMAP_s = SR\_ID\_RESTORE\_BITMAP_r$).
- If $SYNC\_ID\_INCL_r$ is included and equals '1', the mobile station shall store the service configuration synchronization identifier ($SYNC\_ID_s = SYNC\_ID_r$).
- The mobile station shall store the frame offset ($FRAME\_OFFSET_s = FRAME\_OFFSET_r$).
- The mobile station shall store the message encryption mode indicator ($ENCRYPT\_MODE_s = ENCRYPT\_MODE_r$).
- The mobile station shall perform the following procedures in the order listed below:
  - If $D\_SIG\_ENCRYPT\_MODE_r$ is included, the mobile station shall perform the following:

- o If $D\_SIG\_ENCRYPT\_MODE_r$ is equal to '000', the mobile station shall set $D\_SIG\_ENCRYPT\_MODE_s$ to $C\_SIG\_ENCRYPT\_MODE_s$; otherwise, the mobile station shall set $D\_SIG\_ENCRYPT\_MODE_s$ to $D\_SIG\_ENCRYPT\_MODE_r$, ENC_KEY_s to the most recently generated CMEAKEY in the mobile station associated with AUTHR of the *Page Response Message*, and EXT_ENCRYPT_SEQ[0] and EXT_ENCRYPT_SEQ[1] to 256 × ENC_SEQ_H (the ENC_SEQ_H field in the *Page Response Message*).

  + If $ENC\_KEY\_SIZE_r$ is included, the mobile station shall set $ENC\_KEY\_SIZE_s$ to $ENC\_KEY\_SIZE_r$.

  + If C_SIG_ENCRYPT_MODE is included, the mobile station shall set $C\_SIG\_ENCRYPT\_MODE_s$ to $C\_SIG\_ENCRYPT\_MODE_r$.

– The mobile station shall set $EXT\_CH\_IND_s$ to $EXT\_CH\_IND_r$.

– The mobile station shall set CH_IND_s to '00'.

– If $EXT\_CH\_IND_r$ signals the allocation of a F-FCH or a F-DCCH, the mobile station shall store the Forward power control subchannel relative gain [$FPC\_SUBCHAN\_GAIN_s$ = $FPC\_SUBCHAN\_GAIN_r$).

– The mobile station shall set $RLGAIN\_ADJ_s$ to $RLGAIN\_ADJ_r$.

– The mobile station shall set $PLCM\_TYPE_s$ to $PLCM\_TYPE_r$ if $PLCM\_TYPE\_INCL_r$ is equal to '1'; otherwise, the mobile station shall set $PLCM\_TYPE_s$ as follows:

  + If $P\_REV\_IN\_USE_s$ is less than 11, set $PLCM\_TYPE_s$ to '0000'; otherwise set $PLCM\_TYPE_s$ to '0100'.

– The mobile station shall set $PLCM\_39_s$ to $PLCM\_39_r$ if $PLCM\_TYPE_r$ is equal to '0001'.

– The mobile station shall set $FUNDICATED\_BCMC\_IND_s$ to $FUNDICATED\_BCMC\_IND_r$. If $FUNDICATED\_BCMC\_IND_r$ equals '1' and the $EXT\_CH\_IND_r$ signals the allocation of a F-FCH, the mobile station shall set FCH_BCMC_IND to '1'; otherwise, the mobile station shall set FCH_BCMC_IND to '0'.

– If $FUNDICATED\_BCMC\_IND_r$ equals '1' and $ADD\_PLCM\_FOR\_FCH\_INCL_r$ is included and is set to '1', the mobile station shall store the following:

  + Set $ADD\_PLCM\_FOR\_FCH\_TYPE_s$ to $ADD\_PLCM\_FOR\_FCH\_TYPE_r$.

  + Set $ADD\_PLCM\_FOR\_FCH\_39_s$ to $ADD\_PLCM\_FOR\_FCH\_39_r$ if $ADD\_PLCM\_FOR\_FCH\_TYPE_r$ is equal to '1'.

– If $EXT\_CH\_IND_r$ signals the allocation of R-FCH, the mobile station shall set $REV\_FCH\_GATING\_MODE_s$ to $REV\_FCH\_GATING\_MODE_r$.

– The mobile station shall set $REV\_PWR\_CNTL\_DELAY_s$ to $REV\_PWR\_CNTL\_DELAY_r$ if $REV\_PWR\_CNTL\_DELAY\_INCL_r$ is equal to '1'.

- The mobile station shall set $FULL\_CI\_FEEDBACK\_IND_s$ to $FULL\_CI\_FEEDBACK\_IND_r$.
- If $EXT\_CH\_IND_r$ equals '01000', the mobile station shall set $FOR\_CPCCH\_RATE_s$ to $FOR\_CPCCH\_RATE_r$, and $FOR\_CPCCH\_UPDATE\_RATE_s$ to $FOR\_CPCCH\_UPDATE\_RATE_r$; otherwise, the mobile station shall set $FOR\_CPCCH\_RATE_s$ to '00', and $FOR\_CPCCH\_UPDATE\_RATE_s$ to '00'.
- The mobile station shall set $REV\_CQICH\_FRAME\_OFFSET_s$ to $REV\_CQICH\_FRAME\_OFFSET_r$.
- The mobile station shall set $REV\_CQICH\_REPS_s$ to $REV\_CQICH\_REPS_r$.
- The mobile station shall set $REV\_ACKCH\_REPS_s$ to $REV\_ACKCH\_REPS_r$.
- The mobile station shall set $FOR\_PDCH\_RC_s$ to $FOR\_PDCH\_RC_r$.
- If $EXT\_CH\_IND_r$ signals the allocation of a R-PDCH, the mobile station shall set $REV\_PDCH\_RC_s$ to $REV\_PDCH\_RC_r$.
- If $EXT\_CH\_IND_r$ signals the allocation of a F-FCH, the mobile station shall set $FOR\_FCH\_RC_s$ to $FOR\_FCH\_DCCH\_RC_r$.
- If $EXT\_CH\_IND_r$ signals the allocation of a F-DCCH, the mobile station shall set $FOR\_DCCH\_RC_s$ to $FOR\_FCH\_DCCH\_RC_r$.
- If $EXT\_CH\_IND_r$ signals the allocation of a R-FCH, the mobile station shall set $REV\_FCH\_RC_s$ to $REV\_FCH\_DCCH\_RC_r$.
- If $EXT\_CH\_IND_r$ signals the allocation of a R-DCCH, the mobile station shall set $REV\_DCCH\_RC_s$ to $REV\_FCH\_DCCH\_RC_r$.
- If $EXT\_CH\_IND_r$ signals the allocation of a F-FCH and a F-DCCH, the mobile station shall set $FPC\_PRI\_CHAN_s$ to $FPC\_PRI\_CHAN_r$.
- If $EXT\_CH\_IND_r$ signals the allocation of a F-FCH, the mobile station shall set $FPC\_FCH\_INIT\_SETPT_s$ to $FPC\_FCH\_INIT\_SETPT_r$, $FPC\_FCH\_CURR\_SETPT_s$ to $FPC\_FCH\_INIT\_SETPT_s$, $FPC\_FCH\_FER_s$ to $FPC\_FCH\_FER_r$, $FPC\_FCH\_MIN\_SETPT_s$ to $FPC\_FCH\_MIN\_SETPT_r$, $FPC\_FCH\_MAX\_SETPT_s$ to $FPC\_FCH\_MAX\_SETPT_r$.
- If $EXT\_CH\_IND_r$ signals the allocation of a F-DCCH, the mobile station shall set $FPC\_DCCH\_INIT\_SETPT_s$ to $FPC\_DCCH\_INIT\_SETPT_r$, $FPC\_DCCH\_CURR\_SETPT_s$ to $FPC\_DCCH\_INIT\_SETPT_s$, $FPC\_DCCH\_FER_s$ to $FPC\_DCCH\_FER_r$, $FPC\_DCCH\_MIN\_SETPT_s$ to $FPC\_DCCH\_MIN\_SETPT_r$, $FPC\_DCCH\_MAX\_SETPT_s$ to $FPC\_DCCH\_MAX\_SETPT_r$.
- If $EARLY\_RL\_TRANSMIT\_IND_r$ is included, the mobile station shall set $EARLY\_RL\_TRANSMIT\_IND_s$ to $EARLY\_RL\_TRANSMIT\_IND_r$; otherwise, the mobile station shall set $EARLY\_RL\_TRANSMIT\_IND_s$ to '0'.

- If the FIXED_PREAMBLE_TRANSMIT_IND$_r$ is included, the mobile station shall set FIXED_PREAMBLE_TRANSMIT_IND$_s$ to FIXED_PREAMBLE_TRANSMIT_IND$_r$; otherwise, the mobile station shall set FIXED_PREAMBLE_TRANSMIT_IND$_s$ to '0'. If FIXED_PREAMBLE_TRANSMIT_IND$_s$ equals '1', the mobile station shall store FIXED_NUM_PREAMBLE$_s$ to FIXED_NUM_PREAMBLE$_r$.
- If TX_PWR_LIMIT_INCL$_r$ is set to '1', the mobile station shall perform the following:
  - If the mobile station is being assigned to operate in the 1915MHz – 1920MHz block of the PCS band, the mobile station shall store the transmit power limit TX_PWR_LIMIT$_s$ = (TX_PWR_LIMIT$_r$ - 30dB);
  - Otherwise, the mobile station shall set TX_PWR_LIMIT$_s$ to the limit defined in [11] for the target base station.
- If FOR_PDCH_PARMS_INCL$_r$ is equal to '1', the mobile station shall set FOR_PDCH_COMMON_PARMS$_s$ = '0'; otherwise, if FOR_PDCH_COMMON_PARMS$_s$ is equal to '0', the mobile station shall send a *Mobile Station Reject Order* with ORDQ equal to '00000011' (message structure not acceptable) and remain in the current state.
- If FOR_PDCH_RLGAIN_INCL$_r$ is included and equal to '1', the mobile station shall set RLGAIN_ACKCH_PILOT$_s$ to RLGAIN_ACKCH_PILOT$_r$, and RLGAIN_CQICH_PILOT$_s$ to RLGAIN_CQICH_PILOT$_r$.
- If FOR_PDCH_PARMS_INCL$_r$ is equal to '1', the mobile station shall set NUM_SOFT_SWITCHING_FRAMES$_s$ to NUM_SOFT_SWITCHING_FRAMES$_r$ + 1, and NUM_SOFTER_SWITCHING_FRAMES$_s$ to NUM_SOFTER_SWITCHING_FRAMES$_r$ + 1.
- If CHM_SWITCHING_PARMS_INCL$_r$ is included and equal to '1', the mobile station shall set NUM_SOFT_SWITCHING_FRAMES_CHM$_s$ to NUM_SOFT_SWITCHING_FRAMES_CHM$_r$ + 1, and NUM_SOFTER_SWITCHING_FRAMES_CHM$_s$ to NUM_SOFTER_SWITCHING_FRAMES_CHM$_r$ + 1.
- If CHM_SWITCHING_PARMS_INCL$_r$ is included and equal to '0', the mobile station shall set NUM_SOFT_SWITCHING_FRAMES_CHM$_s$ to NUM_SOFT_SWITCHING_FRAMES$_r$ + 1, and NUM_SOFTER_SWITCHING_FRAMES_CHM$_s$ to NUM_SOFTER_SWITCHING_FRAMES$_r$ + 1.
- If FOR_PDCH_PARMS_INCL$_r$ is equal to '1', the mobile station shall set NUM_SOFT_SWITCHING_SLOTS$_s$ according to Table 3.7.2.3.2.21-9 based on the value of NUM_SOFT_SWITCHING_SLOTS$_r$.
- If FOR_PDCH_PARMS_INCL$_r$ is equal to '1', the mobile station shall set NUM_SOFTER_SWITCHING_SLOTS$_s$ according to Table 3.7.2.3.2.21-9 based on the value of NUM_SOFTER_SWITCHING_SLOTS$_r$.

- If $CHM\_SWITCHING\_PARMS\_INCL_r$ is included and equal to '1', the mobile station shall:
  - Set $NUM\_SOFT\_SWITCHING\_SLOTS\_CHM_s$ according to Table 3.7.2.3.2.21-9 based on the value of $NUM\_SOFT\_SWITCHING\_SLOTS\_CHM_r$.
  - Set $NUM\_SOFTER\_SWITCHING\_SLOTS\_CHM_s$ according to Table 3.7.2.3.2.21-9 based on the value of $NUM\_SOFTER\_SWITCHING\_SLOTS\_CHM_r$.
- If $CHM\_SWITCHING\_PARMS\_INCL_r$ is included and equal to '0', the mobile station shall:
  - Set $NUM\_SOFT\_SWITCHING\_SLOTS\_CHM_s$ according to Table 3.7.2.3.2.21-9 based on the value of $NUM\_SOFT\_SWITCHING\_SLOTS_r$.
  - Set $NUM\_SOFTER\_SWITCHING\_SLOTS\_CHM_s$ according to Table 3.7.2.3.2.21-9 based on the value of $NUM\_SOFTER\_SWITCHING\_SLOTS_r$.
- If $FOR\_PDCH\_PARMS\_INCL_r$ is equal to '1', the mobile station shall set $PDCH\_SOFT\_SWITCHING\_DELAY_s$ to $PDCH\_SOFT\_SWITCHING\_DELAY_r + 1$, and $PDCH\_SOFTER\_SWITCHING\_DELAY_s$ to $PDCH\_SOFTER\_SWITCHING\_DELAY_r + 1$.
- If $TX\_DISABLED\_TIMER\_INCL_r$ is equal to '1', the mobile station shall set $TX\_DISABLED\_TIMER_s$ to $TX\_DISABLED\_TIMER_r$; otherwise, the mobile station shall set $TX\_DISABLED\_TIMER_s$ to T_{81m}.
- If $EXT\_CH\_IND_r$ signals the allocation of a R-PDCH, the mobile station shall:
  - Set $FOR\_GCH\_ASSIGNED_s$ to $FOR\_GCH\_ASSIGNED_r$.
  - Set $FOR\_RCCH\_ASSIGNED_s$ to $FOR\_RCCH\_ASSIGNED_r$.
  - If $FOR\_RCCH\_ASSIGNED_s$ is equal to '1', the mobile station shall:
    - Set $FOR\_RCCH\_DRC\_MODE_s$ to $FOR\_RCCH\_DRC\_MODE_r$.
    - Set $FOR\_RCCH\_REPETITION_s$ to $FOR\_RCCH\_REPETITION_r$.
    - Set $FOR\_RCCH\_UPDATE\_RATE_s$ to $FOR\_RCCH\_UPDATE\_RATE_r$.
  - If $FOR\_ACKCH\_ASSIGNED_r$ is equal to '1', the mobile station shall set $FOR\_ACKCH\_MODE_s$ to $FOR\_ACKCH\_MODE_r$.
  - If $FOR\_ACKCH\_COMB\_SEL_r$ is included, the mobile station shall set $FOR\_ACKCH\_COMB\_SEL_s$ to $FOR\_ACKCH\_COMB\_SEL_r$; otherwise, the mobile station shall set $FOR\_ACKCH\_COMB\_SEL_s$ to '0'.
  - If $REV\_PDCH\_RLGAIN\_INCL_r$ is included and equal to '1', the mobile station shall perform the following:
    - The mobile station shall set $RLGAIN\_SPICH\_PILOT_s$ to $RLGAIN\_SPICH\_PILOT_r$.
    - The mobile station shall set $RLGAIN\_REQCH\_PILOT_s$ to $RLGAIN\_REQCH\_PILOT_r$.

- o The mobile station shall set $RLGAIN\_PDCCH\_PILOT_s$ to $RLGAIN\_PDCCH\_PILOT_r$.

+ If $REV\_PDCH\_PARMS\_1\_INCL_r$ is included and equal to '1', the mobile station shall perform the following:
  - o The mobile station shall set $REV\_PDCH\_TABLE\_SEL_s$ to $REV\_PDCH\_TABLE\_SEL_r$.
  - o The mobile station shall set $REV\_PDCH\_MAX\_AUTO\_TPR_s$ to $REV\_PDCH\_MAX\_AUTO\_TPR_r$.

– Otherwise, the mobile station shall:

+ Set $FOR\_GCH\_ASSIGNED_s$ to NULL.
+ Set $FOR\_RCCH\_ASSIGNED_s$ to NULL.

– For each included member of the Active Set, the mobile station shall store the following:

+ Set the PILOT_PN field to $PILOT\_PN_r$.
+ Set the ADD_PILOT_REC_INCL field to $ADD\_PILOT\_REC\_INCL_r$. If $ADD\_PILOT\_REC\_INCL_r$ equals '1', the mobile station shall store the following:
  - o Set the PILOT_REC_TYPE field of PILOT_REC to $PILOT\_REC\_TYPE_r$.
  - o If $PILOT\_REC\_TYPE_r$ equals '000', the mobile station shall set the TD_POWER_LEVEL field of PILOT_REC to $TD\_POWER\_LEVEL_r$ and set the TD_MODE field of PILOT_REC to TD_MODE_r.
  - o If $PILOT\_REC\_TYPE_r$ is equal to '001', the mobile station shall.
    - ◊ Set the AUX_PILOT_QOF field of PILOT_REC to QOF_r.
    - ◊ Set the AUX_PILOT_WALSH_CODE field of PILOT_REC to $AUX\_PILOT\_WALSH_r$ with the Walsh Code length specified by $WALSH\_LENGTH_r$.
  - o If $PILOT\_REC\_TYPE_r$ is equal to '010', the mobile station shall:
    - ◊ Set the AUX_PILOT_TD_QOF field of PILOT_REC to QOF_r.
    - ◊ Set the AUX_PILOT_WALSH_CODE field of PILOT_REC to AUX_WALSH_r with the Walsh Code length specified by $WALSH\_LENGTH_r$.
    - ◊ Set the AUX_TD_POWER_LEVEL field of PILOT_REC to $AUX\_TD\_POWER\_LEVEL_r$.
    - ◊ Set the TD_MODE field of NGHBR_PILOT_REC to TD_MODE_r.
  - o Set $FOR\_PDCH\_INCL_s$ to $FOR\_PDCH\_INCL_r$.
  - o If $FOR\_PDCH\_INCL_r$ is equal to '1', the mobile station shall perform the following:

- ◊ If $FOR\_PDCH\_PARMS\_INCL_r$ is equal to '1', the mobile station shall store the following parameters:
  - – The mobile station shall set $WALSH\_TABLE\_ID_s$ to $WALSH\_TABLE\_ID_r$.
  - – The mobile station shall set NUM_PDCCH_s to NUM_PDCCH_r.
  - – The mobile station shall store $FOR\_PDCCH\_WALSH_s[i]$ to the ith occurrence of $FOR\_PDCCH\_WALSH_r$.
- ◊ The mobile station shall set MAC_ID_s to MAC_ID_r.
- ◊ The mobile station shall set $REV\_CQICH\_COVER_s$ to $REV\_CQICH\_COVER_r$.
- ◊ If $EXT\_CH\_IND_r$ signals the allocation of a F-CPCCH, the mobile station shall set $FOR\_CPCCH\_WALSH_s$ to $FOR\_CPCCH\_WALSH_r$, and, FOR_CPCSCH_s to FOR_CPCSCH_r.
- ◊ The mobile station shall store $FOR\_PDCCH\_WALSH_s[i]$ to the ith occurrence of $FOR\_PDCCH\_WALSH_r$.

o The mobile station shall set $PWR\_COMB\_IND_s$ to $PWR\_COMB\_IND_r$.

o If $PDCH\_GROUP\_IND\_INCL_r$ is equal to '1', the mobile station shall set $PDCH\_GROUP\_IDENTIFIER_s$ as follows:

- ◊ If this is the first pilot in the list that has a F-PDCH assignment, the mobile station shall perform the following:
  - – The mobile station shall set $PDCH\_GROUP\_IDENTIFIER_s$ to '000';
- ◊ Otherwise, the mobile station shall perform the following:
  - – If $PDCH\_GROUP\_IND_r$ is set to '1', the mobile station shall set $PDCH\_GROUP\_IDENTIFIER_s$ to the same value as that of the previous pilot in the list that has a F-PDCH assigned; otherwise, the mobile station shall set $PDCH\_GROUP\_IDENTIFIER_s$ to the value one greater than that of the previous pilot in the list that has a F-PDCH assigned.

o Otherwise, the mobile station shall perform the following:

- ◊ If this is the first pilot in the list that has a F-PDCH assignment, the mobile station shall perform the following:
  - – The mobile station shall set $PDCH\_GROUP\_IDENTIFIER_s$ to '000';
- ◊ Otherwise, the mobile station shall perform the following:
  - – If F-PDCH is assigned for this pilot, the mobile station shall perform the following:

+ If $PWR\_COMB\_IND_r$ is set to '1', and there are no pilots between this pilot and the previous pilot in the list that has a F-PDCH assigned, the mobile station shall set $PDCH\_GROUP\_IDENTIFIER_s$ to the same value as that of the previous pilot in the list that has a F-PDCH assigned.

+ If $PWR\_COMB\_IND_r$ is set to '1', and all pilots between this pilot and the previous pilot in the list that has a F-PDCH assigned have PWR_COMB_IND set to '1', the mobile station shall set $PDCH\_GROUP\_IDENTIFIER_s$ to the same value as that of the previous pilot in the list that has a F-PDCH assigned.

+ Otherwise, the mobile station shall set $PDCH\_GROUP\_IDENTIFIER_s$ to the value one greater than that of the previous pilot in the list.

– Otherwise, the mobile station shall set $PDCH\_GROUP\_IDENTIFIER_s$ to NULL.

o If $EXT\_CH\_IND_r$ signals the allocation of a F-FCH, the mobile station shall set $CODE\_CHAN\_FCH_s = CODE\_CHAN\_FCH_r$, and $QOF\_MASK\_ID\_FCH_s = QOF\_MASK\_ID\_FCH_r$.

o If $EXT\_CH\_IND_r$ signals the allocation of a F-DCCH, the mobile station shall set $CODE\_CHAN\_DCCH_s = CODE\_CHAN\_DCCH_r$, and $QOF\_MASK\_ID\_DCCH_s = QOF\_MASK\_ID\_DCCH_r$.

o If $FOR\_PDCH\_INCL_r$ is equal to '1', $EXT\_CH\_IND_r$ signals the allocation of a R-PDCH, and $FOR\_ACKCH\_ASSIGNED_r$ is equal to '1', the mobile station shall set $FOR\_ACKCH\_WALSH\_INDEX_s$ to $FOR\_ACKCH\_WALSH\_INDEX_r$, and $FOR\_ACKSCH\_INDEX_s$ to $FOR\_ACKSCH\_INDEX_r$.

o If $FOR\_RCCH\_INCL_r$ is included and set to '1', the mobile station shall do the following:

◊ Set $FOR\_RCCH\_WALSH\_INDEX_s$ to $FOR\_RCCH\_WALSH\_INDEX_r$.

◊ Set $FOR\_RCSCH\_INDEX_s$ to $FOR\_RCSCH\_INDEX_r$.

o If $FOR\_PDCH\_INCL_r$ is equal to '1', and if $FOR\_GCH\_ASSIGNED_r$ is included and set to '1', the mobile station shall perform the following;

◊ Set $NUM\_FOR\_GCH_s$ to $NUM\_FOR\_GCH_r$, and

◊ For each of the $NUM\_FOR\_GCH_s$ occurrences of $FOR\_GCH\_WALSH\_INDEX_r$, the mobile station shall set $FOR\_GCH\_WALSH\_INDEX_s[j]$ to $FOR\_GCH\_WALSH\_INDEX_r[j]$.

o Otherwise, the mobile station shall perform the following:

◊ Set $NUM\_FOR\_GCH_s$ to 0, and

◊ Set $FOR\_GCH\_WALSH\_INDEX_s$ to NULL.

– The mobile station shall initialize CODE_CHAN_LIST as described in 2.6.8, and shall set $SERV\_NEG_s$ to enabled.

– If $DIRECT\_CH\_ASSIGN\_IND_r$ is equal to '1', the mobile station shall perform the following:

+ The mobile station shall set $RTC\_NOM\_PWR_s$ to $RTC\_NOM\_PWR_r$.

+ If the mobile station has not received confirmation of delivery of the *Page Response Message* or the *Reconnect Message* sent in this substate, the mobile station shall perform the following:

o Set RTC_NOM_PWR_USE_IND to '1'.

o Set $DIRECT\_CH\_ASSIGN\_RECOVER\_IND_s$ to $DIRECT\_CH\_ASSIGN\_RECOVER\_IND_r$

– If $FREQ\_INCL_r$ equals '1', the mobile station shall then tune to the new frequency assignment.

– If $DIRECT\_CH\_ASSIGN\_IND_r$ is equal to '1' and $RESPOND\_IND_r$ is equal to '1', the mobile station shall perform the following:

+ If the mobile station is in *Mobile Station Idle State*, then the mobile station shall enter the *Update Overhead Information Substate* of the *System Access State* (see 2.6.3.2) with a direct channel assignment respond indication within T_{33m} seconds after the *Extended Channel Assignment Message* is received; otherwise, the mobile station shall enter the *Page Response Substate* with a direct channel assignment respond indication.

Otherwise, the mobile station shall enter the *Traffic Channel Initialization Substate* of the *Mobile Station Control on the Traffic Channel State*.

8. *Fast Call Setup Order:*

- If $ORDQ_r$ is equal to '00000000', the mobile station shall process the message and respond with a *Fast Call Setup Order* as specified in 2.6.12.1.
- If $ORDQ_r$ is equal to '00000001', the mobile station shall process the message as specified in 2.6.12.1.

9. *Feature Notification Message*

10. *Local Control Order*

11. *Lock Until Power-Cycled Order: The mobile station shall disable its transmitter and* record the reason for the *Lock Until Power-Cycled Order* in the mobile station's semi-permanent memory ($LCKRSN\_P_{s-p}$ equals the least significant four bits of $ORDQ_r$). The mobile station should notify the user of the locked condition. The mobile station shall enter the *System Determination Substate* of the *Mobile Station Initialization State* with a lock indication (see 2.6.1.1), and shall not enter the *System Access State* again until after the next mobile station power-up or until it

has received an *Unlock Order*. This requirement shall take precedence over any other mobile station requirement specifying entry to the *System Access State*.

12. *Maintenance Required Order: The mobile station shall record the reason for the Maintenance Required Order* in the mobile station's semi-permanent memory ($MAINTRSN_{s-p}$ equals the least significant four bits of $ORDQ_r$). The mobile station shall remain in the unlocked condition. The mobile station should notify the user of the maintenance required condition.

13. *Registration Accepted Order:* The mobile station shall perform the procedures as specified in 2.6.11.1.

14. *Registration Rejected Order:* This order indicates that normal service is not available on this system. The mobile station shall disable the full-TMSI timer. If the received order specifies to delete the TMSI (ORDQ = '00000100'), the mobile station shall set all the bits of the $TMSI\_CODE_{s-p}$ to '1'. The mobile station shall enter the *System Determination Substate* of the *Mobile Station Initialization State* with a registration rejected indication (see 2.6.1.1).

15. *Release Order:* If $NDSS\_ORIG_s$ is equal to enabled, the mobile station shall set $NDSS\_ORIG_s$ to disabled, and should indicate to the user that the call origination has been canceled. The mobile station shall enter the *Mobile Station Idle State* or the *System Determination Substate* of the *Mobile Station Initialization State* with a release indication (see 2.6.1.1). If the mobile station enters the *Mobile Station Idle State*, and if $PACA_s$ is equal to enabled, the mobile station shall set $PACA_s$ to disabled and PACA_CANCEL to '0', shall disable the PACA state timer, and should indicate to the user that the PACA call has been canceled.

16. *Retry Order:* The mobile station shall process the message as follows:
    - If $RETRY\_TYPE_r$ is equal to '000', the mobile station shall set $RETRY\_DELAY_s$[RETRY_TYPE] to 0, where RETRY_TYPE is equal to '001', '010', '011', '100', or '101'.
    - If $RETRY\_TYPE_r$ is equal to '001', '100', or '101', the mobile station shall perform the following:
        - If $RETRY\_DELAY_r$ is equal to '00000000', then the mobile station shall set $RETRY\_DELAY_s[RETRY\_TYPE_r]$ to 0.
        - If $RETRY\_DELAY_r$ is not equal to '00000000', the mobile station shall set $RETRY\_DELAY_s[RETRY\_TYPE_r]$ as follows:
            + If the most significant bit of the $RETRY\_DELAY_r$ is '0', set $RETRY\_DELAY\_UNIT_s$ to 1000ms. If the most significant bit of the $RETRY\_DELAY_r$ is '1', set $RETRY\_DELAY\_UNIT_s$ to 60000ms.
            + The mobile station shall set $RETRY\_DELAY\_VALUE_s$ to the seven least significant bits of $RETRY\_DELAY_r$.
            + The mobile station shall store the next system time 80 ms boundary + $RETRY\_DELAY\_VALUE_s \times RETRY\_DELAY\_UNIT_s$ ms as $RETRY\_DELAY_s[RETRY\_TYPE_r]$.

17. *Security Mode Command Message:* The mobile station shall perform the procedures as specified in 2.6.11.4.

18. *Service Redirection Message:* The mobile station shall process the message as follows:

    - If the mobile station is directed to an unsupported operation mode or band class, the mobile station shall respond with a *Mobile Station Reject Order* with ORDQ equal to '00000110' (message requires a capability that is not supported by the mobile station).
    - If $DELETE\_TMSI_r$ is equal to '1', the mobile station shall set all the bits of $TMSI\_CODE_{s-p}$ to '1'. The mobile station shall disable the full-TMSI timer.
    - The mobile station shall set $RETURN\_IF\_FAIL_s = RETURN\_IF\_FAIL_r$.
    - If $RECORD\_TYPE_r$ is equal to '00000000', the mobile station shall enter the *System Determination Substate* of the *Mobile Station Initialization State* with an NDSS off indication (see 2.6.1.1); otherwise, the mobile station shall store the redirection record received in the message as $REDIRECT\_REC_s$ and shall enter the *System Determination Substate* of the *Mobile Station Initialization State* with a redirection indication (see 2.6.1.1).

19. *SSD Update Message:* The mobile station shall respond to the message as specified in 2.3.12.1.5.

20. *Status Request Message:* The mobile station shall disable the *System Access State* timer and respond to the message. If $P\_REV\_IN\_USE_s$ is less than or equal to three, the mobile station shall respond with a *Status Response Message*. If $P\_REV\_IN\_USE_s$ is greater than three, the mobile station shall respond with an *Extended Status Response Message*. If the message does not specify any qualification information ($QUAL\_INFO\_TYPE_r$ is equal to '00000000'), the mobile station shall include the requested information records in the response. If the message specifies a band class ($QUAL\_INFO\_TYPE_r$ is equal to '00000001'), the mobile station shall only include the requested information records for the specified band class ($BAND\_CLASS_r$) in the response. If the message specifies a band class and an operating mode ($QUAL\_INFO\_TYPE_r$ is equal to '00000010'), the mobile station shall only include the requested information records for the specified band class ($BAND\_CLASS_r$) and operating mode (OP_MODE_r) in the response. If the message specifies a band class or a band class and an operating mode which is not supported by the mobile station, the mobile station shall send a *Mobile Station Reject Order* with ORDQ set to '00000110' (message requires a capability that is not supported by the mobile station). If the response to this message exceeds the allowable length, the mobile station shall send a *Mobile Station Reject Order* with ORDQ set to '00001000' (response message would exceed the allowable length). If the message specifies an information record which is not supported by the mobile station for the specified band class and operating mode, the mobile station shall send a *Mobile Station Reject Order* with ORDQ set to '00001001' (information record is not supported for the specified band class and operating mode).

21. *TMSI Assignment Message:* The mobile station shall store the TMSI zone and code as follows:

    - The mobile station shall store the length of the TMSI zone field by setting $ASSIGNING\_TMSI\_ZONE\_LEN_{s-p}$ to $TMSI\_ZONE\_LEN_r$;
    - The mobile station shall store the assigning TMSI zone number by setting the $ASSIGNING\_TMSI\_ZONE\_LEN_{s-p}$ least significant octets of $ASSIGNING\_TMSI\_ZONE_{s-p}$ to $TMSI\_ZONE_r$, and
    - The mobile station shall store the TMSI code by setting $TMSI\_CODE_{s-p}$ to $TMSI\_CODE_r$.

    The mobile station shall set the TMSI expiration time by setting $TMSI\_EXP\_TIME_{s-p}$ to $TMSI\_EXP\_TIME_r$. The mobile station shall disable the full-TMSI timer. The mobile station shall then respond with a *TMSI Assignment Completion Message* within T_{56m} seconds.

22. *User Zone Reject Message*

23. General Extension Message: The mobile station shall process this message as specified in section 2.6.18.

24. *Any other message:* If the mobile station receives any other message specified in Table 3.7.2.3-1, it shall ignore all Layer 3 fields. The mobile station shall ignore all other messages.

    If the mobile station performs an access probe handoff or access handoff and receives any of the following messages, it shall process the message as specified in 2.6.3.1.3:

    - If the mobile station is currently monitoring the Paging Channel:
        1. *System Parameters Message*
        2. *Access Parameters Message*
        3. *Neighbor List Message*
        4. *Extended System Parameters Message*
        5. *Extended Neighbor List Message*
        6. *General Neighbor List Message*
        7. *Global Service Redirection Message*
        8. *Extended Global Service Redirection Message*
    - If the mobile station is currently monitoring the Primary Broadcast Control Channel:
        1. *ANSI-41 System Parameters Message*
        2. *Enhanced Access Parameters Message*
        3. *Universal Neighbor List Message*
        4. *MC-RR Parameters Message*

5. *Extended Global Service Redirection Message*

2.6.3.4 Mobile Station Order/Message Response Substate

In this substate, the mobile station sends a message that is a response to a message received from the base station. If the base station responds to the mobile station's message with an authentication request, the mobile station responds in this substate.

If a message received from the base station requires a Layer 2 acknowledgment and does not require a Layer 3 response, Layer 3 shall indicate to Layer 2 that no response is outstanding (see [4]).

If a message received from the base station requires a Layer 2 acknowledgment and also a Layer 3 response, Layer 3 shall indicate to Layer 2 that a response is outstanding (see [4]).

When transmitting a response to a message received from the base station, Layer 3 shall indicate to Layer 2 that the type of the message is a response (see [4]).

When transmitting an autonomous message (i.e., a message that is not sent as a response to a message received from the base station), Layer 3 shall indicate to Layer 2 that the type of the message is a request other than a registration request or a message transmission request (see [4]).

Upon entering the *Mobile Station Order/Message Response Substate*, the mobile station shall send the response message.

While in this substate, the mobile station shall monitor the Paging Channel or the Forward Common Control Channel. If the mobile station declares a loss of the Paging Channel or the Forward Common Control Channel (see 2.6.3.1.8), the mobile station shall perform the following:

- If $PACA_S$ is equal to enabled, the mobile station shall set $PACA_S$ to disabled and PACA_CANCEL to '0', shall disable the PACA state timer, and should indicate to the user that the PACA call has been canceled.
- The mobile station shall declare an access attempt failure and update its registration variables as specified in 2.6.5.5.3.2.
- The mobile station shall disable its transmitter.
- The mobile station shall enter the *Mobile Station Idle State*.

If the mobile station receives confirmation of delivery of any message sent by the mobile station in this substate, it shall send a response in this substate if required, and shall then enter the *Mobile Station Idle State*.

If $PACA_S$ is equal to enabled, the mobile station shall set PACA_CANCEL to '1' when the user directs the mobile station to cancel a PACA call.

If the mobile station is to exit the *System Access State* as a result of processing Layer 3 fields of a message requiring an acknowledgment, the mobile station shall exit the *System Access State* after Layer 3 receives an indication from Layer 2 that the acknowledgment to the message has been sent and acknowledged.

If Layer 3 receives a message with an indication from Layer 2 that an access attempt for a

message being transmitted was not terminated as a result of processing the Layer 2 fields of the received message, the mobile station shall ignore the received message.

The following directed messages and orders can be received. If any field value of the message or order is outside its permissible range, the mobile station may send a *Mobile Station Reject Order* with ORDQ equal to '00000100' (message field not in valid range).

1. *Authentication Challenge Message:* The mobile station shall respond to the message as specified in 2.3.12.1.4, regardless of the value of $AUTH_S$.

2. *Authentication Request Message:* The mobile station shall process the message and shall respond as specified in 2.3.12.5.2.

3. *Base Station Challenge Confirmation Order:* The mobile station shall respond to the message as specified in 2.3.12.1.5.

4. *Base Station Reject Order:* The mobile station shall perform the procedures as specified in 2.6.11.5.

25. *Data Burst Message*

26. *Fast Call Setup Order*:

- If $ORDQ_r$ is equal to '00000000', the mobile station shall process the message and respond with a *Fast Call Setup Order* as specified in 2.6.12.1.
- If $ORDQ_r$ is equal to '00000001', the mobile station shall process the message as specified in 2.6.12.1.

27. *Feature Notification Message*

28. *Local Control Order*

29. *Lock Until Power-Cycled Order:* The mobile station shall disable its transmitter and record the reason for the *Lock Until Power-Cycled Order* in the mobile station's semi-permanent memory ($LCKRSN\_P_{s-p}$ equals the least significant four bits of $ORDQ_r$). The mobile station should notify the user of the locked condition. The mobile station shall enter the *System Determination Substate* of the *Mobile Station Initialization State* with a lock indication (see 2.6.1.1), and shall not enter the *System Access State* again until after the next mobile station power-up or until it has received an *Unlock Order*. This requirement shall take precedence over any other mobile station requirement specifying entry to the *System Access State*.

30. *Maintenance Required Order:* The mobile station shall record the reason for the *Maintenance Required Order* in the mobile station's semi-permanent memory ($MAINTRSN_{s-p}$ equals the least significant four bits of $ORDQ_r$). The mobile station shall remain in the unlocked condition. The mobile station should notify the user of the maintenance required condition.

31. *Registration Accepted Order:* The mobile station shall perform the procedures as specified in 2.6.11.1.

32. *Registration Rejected Order:* This order indicates that normal service is not available on this system. The mobile station shall disable the full-TMSI timer. If the received order specifies to delete the TMSI (ORDQ = '00000100'), the mobile

station shall set all the bits of the $TMSI\_CODE_{s-p}$ to '1'. The mobile station shall enter the *System Determination Substate* of the *Mobile Station Initialization State* with a registration rejected indication (see 2.6.1.1).

33. *Retry Order:* The mobile station shall process the message as follows:
    - If $RETRY\_TYPE_r$ is equal to '000', the mobile station shall set $RETRY\_DELAY_s$[RETRY_TYPE] to 0, where RETRY_TYPE is equal to '001', '010', '011', '100, or '101'.
    - If $RETRY\_TYPE_r$ is equal to '001', '100', or '101', the mobile station shall perform the following:
        - If $RETRY\_DELAY_r$ is equal to '00000000', then the mobile station shall set $RETRY\_DELAY_s[RETRY\_TYPE_r]$ to 0.
        - If $RETRY\_DELAY_r$ is not equal to '00000000', the mobile station shall set $RETRY\_DELAY_s[RETRY\_TYPE_r]$ as follows:
            + If the most significant bit of the $RETRY\_DELAY_r$ is '0', set $RETRY\_DELAY\_UNIT_s$ to 1000ms. If the most significant bit of the $RETRY\_DELAY_r$ is '1', set $RETRY\_DELAY\_UNIT_s$ to 60000ms.
            + The mobile station shall set $RETRY\_DELAY\_VALUE_s$ to the seven least significant bits of $RETRY\_DELAY_r$.
            + The mobile station shall store the next system time 80 ms boundary + $RETRY\_DELAY\_VALUE_s \times RETRY\_DELAY\_UNIT_s$ ms as $RETRY\_DELAY_s[RETRY\_TYPE_r]$.
34. *Security Mode Command Message:* The mobile station shall perform the procedures as specified in 2.6.11.4.
35. *Service Redirection Message:* The mobile station shall process the message as follows:
    - If the mobile station is directed to an unsupported operation mode or band class, the mobile station shall respond with a *Mobile Station Reject Order* with ORDQ equal to '00000110' (message requires a capability that is not supported by the mobile station).
    - If $DELETE\_TMSI_r$ is equal to '1', the mobile station shall set all the bits of $TMSI\_CODE_{s-p}$ to '1'. The mobile station shall disable the full-TMSI timer.
    - The mobile station shall set $RETURN\_IF\_FAIL_s = RETURN\_IF\_FAIL_r$.
    - If $RECORD\_TYPE_r$ is equal to '00000000', the mobile station shall enter the *System Determination Substate* of the *Mobile Station Initialization State* with an NDSS off indication (see 2.6.1.1); otherwise, the mobile station shall store the redirection record received in the message as $REDIRECT\_REC_s$ and shall enter the *System Determination Substate* of the *Mobile Station Initialization State* with a redirection indication (see 2.6.1.1).

36. *SSD Update Message:* The mobile station shall respond to the message as specified in 2.3.12.1.5.

37. *Status Request Message:* The mobile station shall disable the *System Access State* timer and respond to the message. If $P\_REV\_IN\_USE_s$ is less than or equal to three, the mobile station shall respond with a *Status Response Message*. If $P\_REV\_IN\_USE_s$ is greater than three, the mobile station shall respond with an *Extended Status Response Message*. If the message does not specify any qualification information ($QUAL\_INFO\_TYPE_r$ is equal to '00000000'), the mobile station shall include the requested information records in the response. If the message specifies a band class ($QUAL\_INFO\_TYPE_r$ is equal to '00000001'), the mobile station shall only include the requested information records for the specified band class ($BAND\_CLASS_r$) in the response. If the message specifies a band class and an operating mode ($QUAL\_INFO\_TYPE_r$ is equal to '00000010'), the mobile station shall only include the requested information records for the specified band class ($BAND\_CLASS_r$) and operating mode (OP_MODE_r) in the response. If the message specifies a band class or a band class and an operating mode which is not supported by the mobile station, the mobile station shall send a *Mobile Station Reject Order* with ORDQ set to '00000110' (message requires a capability that is not supported by the mobile station). If the response to this message exceeds the allowable length, the mobile station shall send a *Mobile Station Reject Order* with ORDQ set to '00001000' (response message would exceed the allowable length). If the message specifies an information record which is not supported by the mobile station for the specified band class and operating mode, the mobile station shall send a *Mobile Station Reject Order* with ORDQ set to '00001001' (information record is not supported for the specified band class and operating mode).

38. *TMSI Assignment Message:* The mobile station shall store the TMSI zone and code as follows:

    - The mobile station shall store the length of the TMSI zone field by setting $ASSIGNING\_TMSI\_ZONE\_LEN_{s-p}$ to $TMSI\_ZONE\_LEN_r$,
    - The mobile station shall store the assigning TMSI zone number by setting the $ASSIGNING\_TMSI\_ZONE\_LEN_{s-p}$ least significant octets of $ASSIGNING\_TMSI\_ZONE_{s-p}$ to $TMSI\_ZONE_r$, and
    - The mobile station shall store the TMSI code by setting $TMSI\_CODE_{s-p}$ to $TMSI\_CODE_r$.

    The mobile station shall set the TMSI expiration time by setting $TMSI\_EXP\_TIME_{s-p}$ to $TMSI\_EXP\_TIME_r$. The mobile station shall disable the full-TMSI timer. The mobile station shall then respond with a *TMSI Assignment Completion Message* within T_{56m} seconds.

39. *User Zone Reject Message*

40. *Any other message: If the mobile station receives any other message specified* in Table 3.7.2.3-1, it shall ignore all Layer 3 fields. The mobile station shall ignore all other messages.

2.6.3.5 Mobile Station Origination Attempt Substate

In this substate, the mobile station sends an *Origination Message*, *Call Recovery Request Message* or a *Reconnect Message*. If the mobile station sends a *Reconnect Message*, it shall set the ORIG_IND field of the message to '1'.

If directed by the user to transmit a Short Data Burst (see [30]) and the mobile station sends a *Reconnect Message* in assured mode in this substate, the mobile station may include a Short Data Burst in the *Reconnect Message* by setting the SDB_INCL field to '1', if all of the following conditions are true:

- $SDB\_SUPPORTED_S$ and $SDB\_IN\_RCNM\_IND_S$ are equal to '1', and
- ACCT is not enabled for the service option number associated with the Short Data Burst as follows:
  - The service option number associated with the Short Data Burst is not equal to any ACCT_SO entry in ACCT_SO_LIST, and
  - The service option group number of the service option associated with the Short Data Burst is not equal to any ACCT_SO_GRP entry in ACCT_SO_GRP_LIST.

The mobile station shall not send the *Reconnect Message* if $RECONNECT\_MSG\_IND_S$ equals '0', if this message is not being sent to reconnect a dormant packet data service instance, or the information that needs to be conveyed to the base station for the dormant packet data reconnection (PREV_SID, PREV_NID, PREV_PZID. See [42] for details) can not be carried in a *Reconnect Message*.

The mobile station shall not send the *Call Recovery Request Message* if $CRRM\_MSG\_IND_S$ equals '0'.

If $P\_REV\_IN\_USE_S$ is greater than or equal to 11 and the *Origination Message* is being sent to perform packet data dormant handoff, the mobile station shall include all dormant packet data service instances (see [42]) up to the limit specified by $MAX\_ADD\_SERV\_INSTANCE_S$.

If the base station responds to the *Origination Message*, *Call Recovery Request Message* or the *Reconnect Message* with an authentication request, the mobile station responds in this substate.

If a message received from the base station requires a Layer 2 acknowledgment and does not require a Layer 3 response, Layer 3 shall indicate to Layer 2 that no response is outstanding (see [4]).

If a message received from the base station requires a Layer 2 acknowledgment and also a Layer 3 response, Layer 3 shall indicate to Layer 2 that a response is outstanding (see [4]).

When transmitting a response to a message received from the base station, Layer 3 shall indicate to Layer 2 that the type of the message is a response (see [4]).

When transmitting an autonomous message (i.e., a message that is not sent as a response to a message received from the base station), Layer 3 shall indicate to Layer 2 that the type

of the message is a request other than a registration request or a message transmission request (see [4]).

Upon entering the *Mobile Station Origination Attempt Substate*, the mobile station shall set $RLGAIN\_ADJ_S$ to '0000', and perform the following:

- If $P\_REV\_IN\_USE_S$ is less than 11, set $PLCM\_TYPE_S$ to '0000'; otherwise set $PLCM\_TYPE_S$ to '0100'.
- The mobile station shall exit the *Mobile Station Origination Attempt Substate*, shall enter either the *Mobile Station Idle State* or the *System Determination Substate* with an ACCT blocked indication, and should indicate to the user that the call has terminated if all of the following conditions are true:
  - $P\_REV\_IN\_USE_S$ is greater than six,
  - $ACCT\_INCL\_EMG_S$ is equal to '1' or the mobile station determines that the call is not an emergency call,
  - ACCT is enabled for the requested service option number, due to either of the following two conditions:
    - the requested service option number is equal to an ACCT_SO entry in ACCT_SO_LIST, or
    - the service option group number of the requested service option is equal to an ACCT_SO_GRP entry in ACCT_SO_GRP_LIST.
- If the substate was entered with an origination indication, the mobile station shall send the *Origination Message*, *Call Recovery Request Message* or the *Reconnect Message* as an r-csch request.
- If the substate was entered with a PACA response indication, the mobile station shall send the *Origination Message* as an r-csch response using the access procedures specified in 2.6.3.1. The mobile station shall include the dialed digits (if any) from the previous origination attempt in the *Origination Message*.
- If the origination is a result of $NDSS\_ORIG_S$ being equal to enabled, the mobile station shall include in the *Origination Message* the dialed digits (if any) recorded from the previous origination attempt.
- If the mobile station has a stored service configuration (that is, parameters conveyed by both the Service Configuration information record and the Non-negotiable Service Configuration information record) and corresponding SYNC_ID with associated SID and NID that are equal to the SID_S and NID_S respectively, and $USE\_SYNC\_ID_S$ is equal to '1', the mobile station may include the SYNC_ID field in the *Origination Message* or the *Reconnect Message* and, if included, shall perform the following:
  - The mobile station shall set it to the SYNC_ID corresponding to the stored service configuration. The mobile station shall store the value of the SYNC_ID field in $SYNC\_ID_S$.
  - The mobile station shall set the SR_ID field of the *Origination Message* or the

Reconnect Message as follows:

+ If the mobile station requests the restoration of a single service option connection from the stored service configuration, the mobile station shall set this field to the corresponding service reference identifier.

+ Otherwise (that is, the mobile station requests the restoration of all the service option connections from the stored service configuration), the mobile station shall set this field to '111'.

- The mobile station shall include in the *Origination Message* as many of the dialed digits as possible without exceeding the message capsule size. When calculating the number of dialed digits to be included in the *Origination Message*, the mobile station shall assume the following if $P\_REV\_IN\_USE_S$ is greater than three:

  – The number of additional reported pilots (NUM_ADD_PILOTS) is equal to five (see 2.6.3.1.7 and 2.7.1.3.1.3) so that up to five additional pilots may be reported in any access probe, and

  – The number of alternative service option numbers (NUM_ALT_SO) is less than or equal to the maximum alternative service option numbers ($MAX\_NUM\_ALT\_SO_S$).

- If $PACA_S$ is equal to enabled, the mobile station shall set the PACA_REORIG field of the *Origination Message* to '1'; otherwise, the mobile station shall set the field to '0'.

While in this substate, the mobile station shall monitor the Paging Channel or the Forward Common Control Channel. The mobile station may perform an access probe handoff or an access handoff as described in 2.6.3.1.3.2 and 2.6.3.1.3.3. If the mobile station declares a loss of the Paging Channel or the Forward Common Control Channel (see 2.6.3.1.8) during an access attempt, the mobile station may perform an access probe handoff; otherwise, it shall declare an access attempt failure and shall perform the following:

- If the mobile station is monitoring the Paging Channel, the mobile station shall set $SYS\_PAR\_MSG\_SEQ_S$ and $ACC\_MSG\_SEQ_S$ to NULL.

- If the mobile station is monitoring the Forward Common Control Channel, the mobile station shall set $MC\_RR\_PAR\_MSG\_SEQ_S$ and $ACC\_MSG\_SEQ_S$ to NULL.

- If $PACA_S$ is equal to enabled, the mobile station shall set $PACA_S$ to disabled and PACA_CANCEL to '0', shall disable the PACA state timer, and should indicate to the user that the PACA call has been canceled.

- If $NDSS\_ORIG_S$ is equal to enabled, the mobile station shall set $NDSS\_ORIG_S$ to disabled, and should indicate to the user that the call origination is canceled.

- The mobile station shall update its registration variables as specified in 2.6.5.5.3.2.

- The mobile station shall disable its transmitter and enter the *Mobile Station Idle State*.

If the mobile station receives confirmation of delivery of any message sent by the mobile station in this substate, the mobile station shall perform an access handoff if all of the following conditions hold:

- The mobile station declares a loss of the Paging Channel or the Forward Common Control Channel,
- The mobile station is permitted to perform an access handoff (see 2.6.3.1.3.2) and there are pilots other than the active pilot in the access handoff list (see 2.6.3.1.3.2).

If the mobile station declares a loss of the Paging Channel or the Forward Common Control Channel and does not perform an access handoff, the mobile station shall perform the following:

- If the mobile station is monitoring the Paging Channel, the mobile station shall set $SYS\_PAR\_MSG\_SEQ_S$ and $ACC\_MSG\_SEQ_S$ to NULL.
- If the mobile station is monitoring the Forward Common Control Channel, the mobile station shall set $MC\_RR\_PAR\_MSG\_SEQ_S$ and $ACC\_MSG\_SEQ_S$ to NULL.
- If $PACA_S$ is equal to enabled, the mobile station shall set $PACA_S$ to disabled and PACA_CANCEL to '0', shall disable the PACA state timer, and should indicate to the user that the PACA call has been canceled.
- If $NDSS\_ORIG_S$ is equal to enabled, the mobile station shall set $NDSS\_ORIG_S$ to disabled and should indicate to the user that the call origination is canceled.
- The mobile station shall disable its transmitter and enter the *Mobile Station Idle State*.

If the mobile station receives confirmation of delivery of the *Origination Message*, *Call Recovery Request Message* or the *Reconnect Message*, the mobile station shall update its registration variables with respect to the base station to which the first access probe was transmitted after entering the *System Access State* as specified in 2.6.5.5.3.1.

The mobile station shall set and disable the *System Access State* timer as follows:

- The mobile station shall disable the timer whenever it begins an access attempt.
- The mobile station shall set the timer to T_{42m} seconds whenever it ends an access attempt.
- The mobile station shall disable the timer whenever it exits the *System Access State*.

If the *System Access State* timer expires while in this substate, the mobile station shall perform the following:

- If $PACA_S$ is equal to enabled, the mobile station shall set $PACA_S$ to disabled and PACA_CANCEL to '0', shall disable the PACA state timer, and should indicate to the user that the PACA call has been canceled.
- If $NDSS\_ORIG_S$ is equal to enabled, the mobile station shall set $NDSS\_ORIG_S$ to disabled, and should indicate to the user that the call origination is canceled.
- If the mobile station is monitoring the Paging Channel, the mobile station shall set $SYS\_PAR\_MSG\_SEQ_S$ and $ACC\_MSG\_SEQ_S$ to NULL and enter the *Mobile Station Idle State*.

- If the mobile station is monitoring the Forward Common Control Channel, the mobile station shall set MC_RR_PAR_MSG_SEQ$_S$ and ACC_MSG_SEQ$_S$ to NULL and enter the *Mobile Station Idle State*.

If the mobile station is directed by the user to disconnect the call, the mobile station shall perform the following actions:

- Layer 3 shall send an L2-Supervision.Request primitive to Layer 2 to abort any access attempt in progress.
- The mobile station shall send the *Release Order* (normal release) in assured mode requiring confirmation of delivery.
- After receiving confirmation of delivery of the *Release Order*, the mobile station shall enter the *Mobile Station Idle State* (see 2.6.2.2) or the *System Determination Substate* of the *Mobile Station Initialization State* with a release indication (see 2.6.1.1).

If the mobile station is directed by the user to power off, the mobile station shall perform the following actions:

- Layer 3 shall send an L2-Supervision.Request primitive to Layer 2 to abort any access attempt in progress.
- The mobile station shall send the *Release Order* (with power-down indication) in assured mode requiring confirmation of delivery.
- After receiving confirmation of delivery of the *Release Order*, the mobile station shall perform power-down registration procedures (see 2.6.5.1.2).
- The mobile station may power off.

If the mobile station receives a *Channel Assignment Message* or the *Extended Channel Assignment Message*, Layer 3 shall send a *dedicated channel assignment* indication to Layer 2 (see [4]). If the mobile station has not received confirmation of delivery of the *Origination Message*, *Call Recovery Request Message* or the *Reconnect Message* before receiving the *Channel Assignment Message* or the *Extended Channel Assignment Message*, the mobile station shall update its registration variables with respect to the base station to which the first access probe was transmitted after entering the *System Access State*, as specified in 2.6.5.5.3.1.

If the mobile station is to exit the *System Access State* as a result of processing Layer 3 fields of a message requiring an acknowledgment, the mobile station shall exit the *System Access State* after Layer 3 receives an indication from Layer 2 that the acknowledgment to the message has been sent and acknowledged.

If Layer 3 receives a message other than messages listed below:

- a *Channel Assignment Message*, or
- *Extended Channel Assignment Message* with either DIRECT_CH_ASSIGN_IND field not included, or DIRECT_CH_ASSIGN_IND field included and set to ‘0’

with an indication from Layer 2 that an access attempt for a message being transmitted was not terminated as a result of processing the Layer 2 fields of the received message,

the mobile station shall ignore the received message.

The following directed messages and orders can be received. If any field value of the message or order is outside its permissible range, the mobile station may send a *Mobile Station Reject Order* with ORDQ equal to '00000100' (message field not in valid range).

1. *Authentication Challenge Message:* The mobile station shall respond to the message as specified in 2.3.12.1.4, regardless of the value of $AUTH_S$.
2. *Authentication Request Message:* The mobile station shall process the message and shall respond as specified in 2.3.12.5.2.
3. *Base Station Challenge Confirmation Order:* The mobile station shall respond to the message as specified in 2.3.12.1.5.
4. *Base Station Reject Order:* The mobile station shall perform the procedures as specified in 2.6.11.5.
5. *Channel Assignment Message:* The mobile station shall process the message as follows:
   - If $ASSIGN\_MODE_r$ equals '000', the mobile station shall perform the following actions:
     - The mobile station shall set CH_IND_S to '01'.
     - The mobile station shall store the frame offset ($FRAME\_OFFSET_S$ = $FRAME\_OFFSET_r$), the message encryption mode indicator ($ENCRYPT\_MODE_S$ = $ENCRYPT\_MODE_r$), and, if $FREQ\_INCL_r$ equals '1', the Frequency Assignment ($CDMACH_S$ = $CDMA\_FREQ_r$).
     - If $PACA_S$ is equal to enabled, the mobile station shall set $PACA_S$ to disabled and PACA_CANCEL to '0', shall disable the PACA state timer, and should indicate to the user that the PACA call is proceeding.
     - If the mobile station is currently monitoring the Paging Channel, the mobile station shall set IDLE_BCCH_CHAN to '0'; otherwise, the mobile station shall set IDLE_BCCH_CHAN to '1'. The mobile station shall set IDLE_CDMA_CHAN to $CDMACH_S$, IDLE_CDMABAND to $CDMABAND_S$, IDLE_SID to SID_S, IDLE_NID to NID_S, and IDLE_P_REV to P_REV_S.
     - The mobile station shall initialize the CODE_CHAN_LIST as described in 2.6.8, shall set $SERV\_NEG_S$ to disabled, and shall enter the *Traffic Channel Initialization Substate* of the *Mobile Station Control on the Traffic Channel State*.
   - If $ASSIGN\_MODE_r$ equals '001', the mobile station shall perform the following actions:
     - If the message requires acknowledgment, the mobile station shall wait until Layer 3 receives an indication from Layer 2 that the acknowledgment to the message has been sent and acknowledged.

- If a CDMA channel (CDMA_FREQ) is specified in the assignment, the mobile station shall set $CDMACH_s$ = $CDMA\_FREQ_r$, tune to the new Frequency Assignment, and measure the strength of each pilot listed in the assignment using the Neighbor Set search procedures specified in 2.6.6.2.1 and 2.6.6.2.2.
- The mobile station shall set $CONFIG\_MSG\_SEQ_s$ and $ACC\_MSG\_SEQ_s$ to NULL (see 2.6.2.2) and shall set $PILOT\_PN_s$ to the pilot PN sequence offset of the strongest pilot in the list.
- If the mobile station has not stored configuration parameters for the Primary Paging Channel of the new base station, or if the stored information is not current (see 2.6.2.2), the mobile station shall set $SYS\_PAR\_MSG\_SEQ_s$, $NGHBR\_LST\_MSG\_SEQ_s$, $EXT\_NGHBR\_LST\_MSG\_SEQ_s$, $GEN\_NGHBR\_LST\_MSG\_SEQ_s$, $CHAN\_LST\_MSG\_SEQ_s$, $EXT\_CHAN\_LST\_MSG\_SEQ_s$, $FD\_CHAN\_LST\_MSG\_SEQ_s$, $EXT\_SYS\_PAR\_MSG\_SEQ_s$, $USER\_ZONE\_ID\_MSG\_SEQ_s$, $PRI\_NGHBR\_LST\_MSG\_SEQ_s$, $GLOB\_SERV\_REDIR\_MSG\_SEQ_s$, and $EXT\_GLOB\_SERV\_REDIR\_MSG\_SEQ_s$ to NULL.
- The mobile station shall set $PAGE\_CHAN_s$ to '1' and $PAGECH_s$ to the Primary Paging Channel. The mobile station shall then begin monitoring the Primary Paging Channel of the selected base station.
- If $RESPOND_r$ is equal to '1', the mobile station shall enter the *Update Overhead Information Substate* with an origination indication.

• If $ASSIGN\_MODE_r$ equals '100', the mobile station shall perform the following actions:

- The mobile station shall set CH_IND_s to '01'.
- If $GRANTED\_MODE_r$ equals '00', and the multiplex option or radio configuration specified in the DEFAULT_CONFIG field is not supported by the mobile station, the mobile station shall send a *Mobile Station Reject Order* with ORDQ field set to '00000110' (capability not supported by the mobile station) and remain in *Mobile Station Origination Attempt Substate*.
- If $FREQ\_INCL_r$ equals '0', the mobile station shall perform the following actions:
  + The mobile station shall store the frame offset ($FRAME\_OFFSET_s$ = $FRAME\_OFFSET_r$), the message encryption mode indicator ($ENCRYPT\_MODE_s$ = $ENCRYPT\_MODE_r$), the granted mode ($GRANTED\_MODE_s$ = $GRANTED\_MODE_r$), and the default configuration ($DEFAULT\_CONFIG_s$ = $DEFAULT\_CONFIG_r$).
  + The mobile station shall set $SERV\_NEG_s$ to enabled.
  + If $PACA_s$ is equal to enabled, the mobile station shall set $PACA_s$ equal to disabled and PACA_CANCEL to '0', shall disable the PACA state timer, and should indicate to the user that the PACA call is proceeding.

- The mobile station shall initialize CODE_CHAN_LIST as described in 2.6.8.
- If the mobile station is currently monitoring the Paging Channel, the mobile station shall set IDLE_BCCH_CHAN to ‘0’; otherwise, the mobile station shall set IDLE_BCCH_CHAN to ‘1’. The mobile station shall set IDLE_CDMA_CHAN to $CDMACH_s$, IDLE_CDMABAND to $CDMABAND_s$, IDLE_SID to SID_s, IDLE_NID to NID_s, and IDLE_P_REV to P_REV_s.
- The mobile station shall then enter the *Traffic Channel Initialization Substate* of the *Mobile Station Control on the Traffic Channel State*.

– If $FREQ\_INCL_r$ equals ‘1’, the mobile station shall perform the following actions:

- If the band class is not supported by the mobile station, the mobile station shall send a *Mobile Station Reject Order* with ORDQ field set to ‘00000110’ (capability not supported by the mobile station) and remain in the *Mobile Station Origination Attempt Substate*.
- If the band class is supported by the mobile station, the mobile station shall perform the following actions:
  - The mobile station shall store the frame offset ($FRAME\_OFFSET_s$ = $FRAME\_OFFSET_r$), the message encryption mode indicator ($ENCRYPT\_MODE_s$ = $ENCRYPT\_MODE_r$), the granted mode ($GRANTED\_MODE_s$ = $GRANTED\_MODE_r$), the default configuration ($DEFAULT\_CONFIG_s$ = $DEFAULT\_CONFIG_r$), the idle Frequency Assignment (IDLE_CDMA_CHAN = $CDMACH_s$), the idle band class (IDLE_CDMABAND = $CDMABAND_s$), the band class ($CDMABAND_s$ = $BAND\_CLASS_r$), and the Frequency Assignment ($CDMACH_s$ = $CDMA\_FREQ_r$).
  - The mobile station shall set $SERV\_NEG_s$ to enabled.
  - If $PACA_s$ is equal to enabled, the mobile station shall set $PACA_s$ to disabled and PACA_CANCEL to ‘0’, shall disable the PACA state timer, and should indicate to the user that the PACA call is proceeding.
  - The mobile station shall initialize the CODE_CHAN_LIST as described in 2.6.8.
  - If the mobile station is currently monitoring the Paging Channel, the mobile station shall set IDLE_BCCH_CHAN to ‘0’; otherwise, the mobile station shall set IDLE_BCCH_CHAN to ‘1’. The mobile station shall set IDLE_SID to SID_s, IDLE_NID to NID_s, and IDLE_P_REV to P_REV_s.
  - The mobile station shall then tune to the new Frequency Assignment and enter the *Traffic Channel Initialization Substate* of the *Mobile Station Control on the Traffic Channel State*.

- If $ASSIGN\_MODE_r$ equals '101', the mobile station shall perform the following actions:
  - If $FREQ\_INCL_r$ equals '0', the mobile station shall perform the following actions:
    - If the message requires acknowledgment, the mobile station shall wait until Layer 3 receives an indication from Layer 2 that the acknowledgment to the message has been sent and acknowledged.
    - The mobile station shall set $CONFIG\_MSG\_SEQ_s$ and $ACC\_MSG\_SEQ_s$ to NULL (see 2.6.2.2) and shall set $PILOT\_PN_s$ to the pilot PN sequence offset of the strongest pilot in the list ($PILOT\_PN_r$).
    - If the mobile station has not stored configuration parameters for the Primary Paging Channel of the new base station, or if the stored information is not current (see 2.6.2.2), the mobile station shall set $SYS\_PAR\_MSG\_SEQ_s$, $NGHBR\_LST\_MSG\_SEQ_s$, $EXT\_NGHBR\_LST\_MSG\_SEQ_s$, $GEN\_NGHBR\_LST\_MSG\_SEQ_s$, $CHAN\_LST\_MSG\_SEQ_s$, $EXT\_CHAN\_LST\_MSG\_SEQ_s$, $FD\_CHAN\_LST\_MSG\_SEQ_s$, $EXT\_SYS\_PAR\_MSG\_SEQ_s$, $USER\_ZONE\_ID\_MSG\_SEQ_s$, $PRI\_NGHBR\_LST\_MSG\_SEQ_s$, $GLOB\_SERV\_REDIR\_MSG\_SEQ_s$, and $EXT\_GLOB\_SERV\_REDIR\_MSG\_SEQ_s$ to NULL.
    - The mobile station shall set $PAGE\_CHAN_s$ to '1' and $PAGECH_s$ to the Primary Paging Channel. The mobile station shall then begin monitoring the Primary Paging Channel of the selected base station.
    - If $RESPOND_r$ is equal to '1', the mobile station shall perform the following:
      - If the *Channel Assignment Message* does not require an acknowledgment, the mobile station shall enter the *Update Overhead Information Substate* with an origination indication within T_{34m} seconds after receiving the *Channel Assignment Message*.
      - If the *Channel Assignment Message* requires an acknowledgment, the mobile station shall enter the *Update Overhead Information Substate* with a page response retransmission indication within T_{34m} seconds after Layer 3 receives an indication from Layer 2 that the acknowledgment to the *Channel Assignment Message* has been sent and acknowledged.
    - If $RESPOND_r$ is equal to '0', the mobile station shall perform the following:
      - If the *Channel Assignment Message* does not require an acknowledgment, the mobile station shall enter the *Mobile Station Idle State* within T_{34m} seconds after receiving the *Channel Assignment Message*.

- If the *Channel Assignment Message* requires an acknowledgment, the mobile station shall enter the *Mobile Station Idle State* within T_{34m} seconds after Layer 3 receives an indication from Layer 2 that the acknowledgment to the *Channel Assignment Message* has been sent and acknowledged.

– If $FREQ\_INCL_r$ equals '1', the mobile station shall perform the following actions:

  + If the band class is not supported by the mobile station, the mobile station shall send a *Mobile Station Reject Order* with ORDQ field set to '00000110' (capability not supported by the mobile station) and remain in the *Mobile Station Origination Attempt Substate*.

  + If the band class is supported by the mobile station, the mobile station shall perform the following actions:

    - If the message requires acknowledgment, the mobile station shall wait until Layer 3 receives an indication from Layer 2 that the acknowledgment to the message has been sent and acknowledged.

    - The mobile station shall set $CDMACH_s$ to $CDMA\_FREQ_r$ and $CDMABAND_s$ to $BAND\_CLASS_r$. Then the mobile station shall tune to the new Frequency Assignment, measure the strength of each pilot listed in the assignment using the Neighbor Set search procedures specified in 2.6.6.2.1 and 2.6.6.2.2, set $PILOT\_PN_s$ to the pilot PN sequence offset of the strongest pilot in the list ($PILOT\_PN_r$), and set $CONFIG\_MSG\_SEQ_s$ and $ACC\_MSG\_SEQ_s$ to NULL (see 2.6.2.2).

    - If the mobile station has not stored configuration parameters for the Primary Paging Channel of the new base station, or if the stored information is not current (see 2.6.2.2), the mobile station shall set $SYS\_PAR\_MSG\_SEQ_s$, $NGHBR\_LST\_MSG\_SEQ_s$, $EXT\_NGHBR\_LST\_MSG\_SEQ_s$, $GEN\_NGHBR\_LST\_MSG\_SEQ_s$, $CHAN\_LST\_MSG\_SEQ_s$, $EXT\_CHAN\_LST\_MSG\_SEQ_s$, $FD\_CHAN\_LST\_MSG\_SEQ_s$, $EXT\_SYS\_PAR\_MSG\_SEQ_s$, $USER\_ZONE\_ID\_MSG\_SEQ_s$, $PRI\_NGHBR\_LST\_MSG\_SEQ_s$, $GLOB\_SERV\_REDIR\_MSG\_SEQ_s$, and $EXT\_GLOB\_SERV\_REDIR\_MSG\_SEQ_s$ to NULL.

    - The mobile station shall set $PAGE\_CHAN_s$ to '1' and $PAGECH_s$ to the Primary Paging Channel. The mobile station shall then begin monitoring the Primary Paging Channel of the selected base station.

    - If $RESPOND_r$ is equal to '1', the mobile station shall perform the following:

- ◊ If the *Channel Assignment Message* does not require an acknowledgment, the mobile station shall enter the *Update Overhead Information Substate* with a page response retransmission indication within T_{34m} seconds after receiving the *Channel Assignment Message*.
- ◊ If the *Channel Assignment Message* requires an acknowledgment, the mobile station shall enter the *Update Overhead Information Substate* with a page response retransmission indication within T_{34m} seconds after Layer 3 receives an indication from Layer 2 that the acknowledgment to the *Channel Assignment Message* has been sent and acknowledged.

o If $RESPOND_r$ is equal to '0', the mobile station shall perform the following:

- ◊ If the *Channel Assignment Message* does not require an acknowledgment, the mobile station shall enter the *Mobile Station Idle State* within T_{34m} seconds after receiving the *Channel Assignment Message*.
- ◊ If the *Channel Assignment Message* requires an acknowledgment, the mobile station shall enter the *Mobile Station Idle State* within T_{34m} seconds after Layer 3 receives an indication from Layer 2 that the acknowledgment to the *Channel Assignment Message* has been sent and acknowledged.

6. *Data Burst Message*
7. *Extended Channel Assignment Message:* If $P\_REV\_IN\_USE_s$ is greater than or equal to 11, and $DIRECT\_CH\_ASSIGN\_IND_r$ equals '1', the mobile station shall ignore the message. Otherwise, the mobile station shall process the message as follows:
   - The mobile station shall set RTC_NOM_PWR_USE_IND to '0'.
   - The mobile station shall set $DIRECT\_CH\_ASSIGN\_RECOVER\_IND_s$ to '0'.
   - If $ASSIGN\_MODE_r$ equals '000', the mobile station shall perform the following actions:
     - If $PACA_s$ is equal to enabled, the mobile station shall set $PACA_s$ to disabled and PACA_CANCEL to '0', shall disable the PACA state timer, and should indicate to the user that the PACA call has been canceled.
     - If $GRANTED\_MODE_r$ equals '00', and the multiplex option and radio configuration specified in the DEFAULT_CONFIG field are not supported by the mobile station, the mobile station shall send a *Mobile Station Reject Order* with ORDQ field set to '00000110' (capability not supported by the mobile station) and shall remain in the *Mobile Station Origination Attempt Substate*.

- If $GRANTED\_MODE_r$ is equal to '00' and $DEFAULT\_CONFIG_r$ is not equal to '100', the mobile station shall send a *Mobile Station Reject Order* with ORDQ field set to '00001110' (RC does not match with $DEFAULT\_CONFIG_r$) and shall remain in the *Mobile Station Origination Attempt Substate* if any of the following conditions is true:
  - $FOR\_FCH\_RC_r$ is not equal to the RC associated with $DEFAULT\_CONFIG_r$ (see Table 3.7.2.3.2.21-2).
  - $REV\_FCH\_RC_r$ is not equal to the RC associated with $DEFAULT\_CONFIG_r$ (see Table 3.7.2.3.2.21-2).
- If the mobile station does not support either of the Fundamental Channel Radio Configurations (FOR_FCH_RC or REV_FCH_RC), the mobile shall send a *Mobile Station Reject Order* with the ORDQ field set to '00000110' (capability not supported by the mobile station) and remain in the *Mobile Station Origination Attempt Substate*.
- If $PLCM\_TYPE_r$ equals '0010' and IMSI_O is derived from IMSI_T, or if $PLCM\_TYPE_r$ equals '0011' and IMSI_O is derived from IMSI_M, the mobile station shall send a *Mobile Station Reject Order* with the ORDQ field set to '00011100' (PLCM_TYPE mismatch) and remain in the *Mobile Station Origination Attempt Substate*.
- The mobile station shall set CH_IND_s to '01'.
- If $P\_REV\_IN\_USE_s$ is equal to or greater than six, the mobile station shall store the Forward Fundamental Channel Radio Configuration ($FOR\_FCH\_RC_s = FOR\_FCH\_RC_r$) and the Reverse Fundamental Channel Radio Configuration ($REV\_FCH\_RC_s = REV\_FCH\_RC_r$)
- If $FREQ\_INCL_r$ equals '0', the mobile station shall perform the following actions:
  - The mobile station shall store the frame offset ($FRAME\_OFFSET_s = FRAME\_OFFSET_r$), the message encryption mode indicator ($ENCRYPT\_MODE_s = ENCRYPT\_MODE_r$), the bypass indicator ($BYPASS\_ALERT\_ANSWER_s = BYPASS\_ALERT\_ANSWER_r$), the granted mode ($GRANTED\_MODE_s = GRANTED\_MODE_r$), the default configuration ($DEFAULT\_CONFIG_s = DEFAULT\_CONFIG_r$), and the occurrences of PILOT_PN and PWR_COMB for each included member of the Active Set.
  - If C_SIG_ENCRYPT_MODE is included, the mobile station shall set $C\_SIG\_ENCRYPT\_MODE_s$ to $C\_SIG\_ENCRYPT\_MODE_r$.
  - The mobile station shall perform the procedures in 2.6.11.2.
  - The mobile station shall set $SERV\_NEG_s$ to enabled.
  - If $PACA_s$ is equal to enabled, the mobile station shall set $PACA_s$ equal to disabled and PACA_CANCEL to '0', shall disable the PACA state timer, and should indicate to the user that the PACA call is proceeding.

+ The mobile station shall initialize CODE_CHAN_LIST as described in 2.6.8.
+ The mobile station shall set $FPC\_FCH\_INIT\_SETPT_s$ to $FPC\_FCH\_INIT\_SETPT_r$, $FPC\_FCH\_CURR\_SETPT_s$ to $FPC\_FCH\_INIT\_SETPT_s$, $FPC\_FCH\_FER_s$ to $FPC\_FCH\_FER_r$, $FPC\_FCH\_MIN\_SETPT_s$ to $FPC\_FCH\_MIN\_SETPT_r$, $FPC\_FCH\_MAX\_SETPT_s$ to $FPC\_FCH\_MAX\_SETPT_r$, and $FPC\_PRI\_CHAN_s$ to '0' if the mobile station supports any Radio Configuration greater than 2.
+ The mobile station shall set $FPC\_SUBCHAN\_GAIN_s$ to $FPC\_SUBCHAN\_GAIN_r$.
+ The mobile station shall set $REV\_FCH\_GATING\_MODE_s$ to $REV\_FCH\_GATING\_MODE_r$.
+ The mobile station shall set $REV\_PWR\_CNTL\_DELAY_s$ to $REV\_PWR\_CNTL\_DELAY_r$ if $REV\_PWR\_CNTL\_DELAY\_INCL_r$ is equal to '1'.
+ The mobile station shall set $RLGAIN\_ADJ_s$ to $RLGAIN\_ADJ_r$.
+ The mobile station shall set $PLCM\_TYPE_s$ to $PLCM\_TYPE_r$ if $PLCM\_TYPE\_INCL_r$ is equal to '1'; otherwise, the mobile station shall set $PLCM\_TYPE_s$ as follows:
  - If $P\_REV\_IN\_USE_s$ is less than 11, set $PLCM\_TYPE_s$ to '0000'; otherwise set $PLCM\_TYPE_s$ to '0100'.
+ The mobile station shall set $PLCM\_39_s$ to $PLCM\_39_r$ if $PLCM\_TYPE_r$ is equal to '0001'.
+ If the mobile station is currently monitoring the Paging Channel, the mobile station shall set IDLE_BCCH_CHAN to '0'; otherwise, the mobile station shall set IDLE_BCCH_CHAN to '1'. The mobile station shall set IDLE_CDMA_CHAN to $CDMACH_s$, IDLE_CDMABAND to $CDMABAND_s$, IDLE_SID to SID_s, IDLE_NID to NID_s, and IDLE_P_REV to P_REV_s.
+ The mobile station shall then enter the *Traffic Channel Initialization Substate* of the *Mobile Station Control on the Traffic Channel State*.

– If $FREQ\_INCL_r$ equals '1', the mobile station shall perform the following actions:
  + If the band class is not supported by the mobile station, the mobile station shall send a *Mobile Station Reject Order* with ORDQ field set to '00000110' (capability not supported by the mobile station) and remain in the *Mobile Station Origination Attempt Substate*.
  + If the band class is supported by the mobile station, the mobile station shall perform the following actions:

- The mobile station shall store the frame offset ($FRAME\_OFFSET_s$ = $FRAME\_OFFSET_r$); the message encryption mode indicator ($ENCRYPT\_MODE_s$ = $ENCRYPT\_MODE_r$); the bypass indicator ($BYPASS\_ALERT\_ANSWER_s$ = $BYPASS\_ALERT\_ANSWER_r$); the granted mode ($GRANTED\_MODE_s$ = $GRANTED\_MODE_r$); the default configuration ($DEFAULT\_CONFIG_s$ = $DEFAULT\_CONFIG_r$); the idle Frequency Assignment (IDLE_CDMA_CHAN = $CDMACH_s$); the idle band class (IDLE_CDMABAND = $CDMABAND_s$); the band class ($CDMABAND_s$ = $BAND\_CLASS_r$); the Frequency Assignment ($CDMACH_s$ = $CDMA\_FREQ_r$); and the occurrences of PILOT_PN and PWR_COMB_IND for each included member of the Active Set.
- The mobile station shall perform the procedures in 2.6.11.2.
- The mobile station shall set $SERV\_NEG_s$ to enabled.
- The mobile station shall initialize CODE_CHAN_LIST as described in 2.6.8.
- The mobile station shall set $FPC\_FCH\_INIT\_SETPT_s$ to $FPC\_FCH\_INIT\_SETPT_r$, $FPC\_FCH\_CURR\_SETPT_s$ to $FPC\_FCH\_INIT\_SETPT_s$, $FPC\_FCH\_FER_s$ to $FPC\_FCH\_FER_r$, $FPC\_FCH\_MIN\_SETPT_s$ to $FPC\_FCH\_MIN\_SETPT_r$, $FPC\_FCH\_MAX\_SETPT_s$ to $FPC\_FCH\_MAX\_SETPT_r$, and $FPC\_PRI\_CHAN_s$ to ‘0’ if the mobile station supports any Radio Configuration greater than 2.
- The mobile station shall set $FPC\_SUBCHAN\_GAIN_s$ to $FPC\_SUBCHAN\_GAIN_r$.
- The mobile station shall set $RLGAIN\_ADJ_s$ to $RLGAIN\_ADJ_r$.
- The mobile station shall set $REV\_FCH\_GATING\_MODE_s$ to $REV\_FCH\_GATING\_MODE_r$.
- The mobile station shall set $REV\_PWR\_CNTL\_DELAY_s$ to $REV\_PWR\_CNTL\_DELAY_r$ if $REV\_PWR\_CNTL\_DELAY\_INCL_r$ is equal to ‘1’.
- The mobile station shall set $PLCM\_TYPE_s$ to $PLCM\_TYPE_r$ if $PLCM\_TYPE\_INCL_r$ is equal to ‘1’; otherwise, the mobile station shall set $PLCM\_TYPE_s$ as follows:
  - ◊ If $P\_REV\_IN\_USE_s$ is less than 11, set $PLCM\_TYPE_s$ to ‘0000’; otherwise set $PLCM\_TYPE_s$ to ‘0100’.
- The mobile station shall set $PLCM\_39_s$ to $PLCM\_39_r$ if $PLCM\_TYPE_r$ is equal to ‘0001’.

- o If the mobile station is currently monitoring the Paging Channel, the mobile station shall set IDLE_BCCH_CHAN to '0'; otherwise, the mobile station shall set IDLE_BCCH_CHAN to '1'. The mobile station shall set IDLE_SID to SID_s, IDLE_NID to NID_s, IDLE_P_REV to P_REV_s.
- o The mobile station shall then tune to the new Frequency Assignment and enter the *Traffic Channel Initialization Substate* of the *Mobile Station Control on the Traffic Channel State*.

• If $ASSIGN\_MODE_r$ equals '001', the mobile station shall perform the following actions:

– If $FREQ\_INCL_r$ equals '0', the mobile station shall perform the following actions:

+ If the message requires acknowledgment, the mobile station shall wait until Layer 3 receives an indication from Layer 2 that the acknowledgment to the message has been sent and acknowledged.
+ The mobile station shall set $CONFIG\_MSG\_SEQ_s$ and $ACC\_MSG\_SEQ_s$ to NULL (see 2.6.2.2) and shall set $PILOT\_PN_s$ to the pilot PN sequence offset of the strongest pilot in the list ($PILOT\_PN_r$).
+ If the mobile station has not stored configuration parameters for the Primary Paging Channel of the new base station, or if the stored information is not current (see 2.6.2.2), the mobile station shall set $SYS\_PAR\_MSG\_SEQ_s$, $NGHBR\_LST\_MSG\_SEQ_s$, $EXT\_NGHBR\_LST\_MSG\_SEQ_s$, $GEN\_NGHBR\_LST\_MSG\_SEQ_s$, $CHAN\_LST\_MSG\_SEQ_s$, $EXT\_CHAN\_LST\_MSG\_SEQ_s$, $FD\_CHAN\_LST\_MSG\_SEQ_s$, $EXT\_SYS\_PAR\_MSG\_SEQ_s$, $USER\_ZONE\_ID\_MSG\_SEQ_s$, $PRI\_NGHBR\_LST\_MSG\_SEQ_s$, $GLOB\_SERV\_REDIR\_MSG\_SEQ_s$, and $EXT\_GLOB\_SERV\_REDIR\_MSG\_SEQ_s$ to NULL.
+ The mobile station shall set $PAGE\_CHAN_s$ to '1' and $PAGECH_s$ to the Primary Paging Channel. If the mobile station was monitoring Forward Common Control Channel, the mobile station shall set the $PRAT_s$ to '00'. The mobile station shall then begin monitoring the Primary Paging Channel of the selected base station.
+ If $RESPOND_r$ is equal to '1', the mobile station shall perform the following:
  - o If the *Extended Channel Assignment Message* does not require an acknowledgment, the mobile station shall enter the *Update Overhead Information Substate* with an origination indication within T_{34m} seconds after receiving the *Extended Channel Assignment Message*.

- If the *Extended Channel Assignment Message* requires an acknowledgment, the mobile station shall enter the *Update Overhead Information Substate* with an origination indication within T_{34m} seconds after Layer 3 receives an indication from Layer 2 that the acknowledgment to the *Extended Channel Assignment Message* has been sent and acknowledged.

– If $FREQ\_INCL_r$ equals '1', the mobile station shall perform the following actions:

  + If the band class is not supported by the mobile station, the mobile station shall send a *Mobile Station Reject Order* with ORDQ field set to '00000110' (capability not supported by the mobile station) and remain in the *Mobile Station Origination Attempt Substate*.

  + If the band class is supported by the mobile station, the mobile station shall perform the following actions:

    - If the message requires acknowledgment, the mobile station shall wait until Layer 3 receives an indication from Layer 2 that the acknowledgment to the message has been sent and acknowledged.

    - The mobile station shall set $CDMACH_s$ to $CDMA\_FREQ_r$ and $CDMABAND_s$ to $BAND\_CLASS_r$. Then the mobile station shall tune to the new Frequency Assignment, measure the strength of each pilot listed in the assignment using the Neighbor Set search procedures specified in 2.6.6.2.1 and 2.6.6.2.2, set $PILOT\_PN_s$ to the pilot PN sequence offset of the strongest pilot in the list ($PILOT\_PN_r$), and set $CONFIG\_MSG\_SEQ_s$ and $ACC\_MSG\_SEQ_s$ to NULL (see 2.6.2.2).

    - If the mobile station has not stored configuration parameters for the Primary Paging Channel of the new base station, or if the stored information is not current (see 2.6.2.2), the mobile station shall set $SYS\_PAR\_MSG\_SEQ_s$, $NGHBR\_LST\_MSG\_SEQ_s$, $EXT\_NGHBR\_LST\_MSG\_SEQ_s$, $GEN\_NGHBR\_LST\_MSG\_SEQ_s$, $CHAN\_LST\_MSG\_SEQ_s$, $EXT\_CHAN\_LST\_MSG\_SEQ_s$, $FD\_CHAN\_LST\_MSG\_SEQ_s$, $EXT\_SYS\_PAR\_MSG\_SEQ_s$, $USER\_ZONE\_ID\_MSG\_SEQ_s$, $PRI\_NGHBR\_LST\_MSG\_SEQ_s$, $GLOB\_SERV\_REDIR\_MSG\_SEQ_s$, and $EXT\_GLOB\_SERV\_REDIR\_MSG\_SEQ_s$ to NULL.

    - The mobile station shall set $PAGE\_CHAN_s$ to '1' and $PAGECH_s$ to the Primary Paging Channel. If the mobile station was monitoring Forward Common Control Channel, the mobile station shall set the $PRAT_s$ to '00'. The mobile station shall then begin monitoring the Primary Paging Channel of the selected base station.

    - If $RESPOND_r$ is equal to '1', the mobile station shall perform the following:

◊ If the *Extended Channel Assignment Message* does not require an acknowledgment, the mobile station shall enter the *Update Overhead Information Substate* with an origination indication within T_{34m} seconds after receiving the *Extended Channel Assignment Message*.

◊ If the *Extended Channel Assignment Message* requires an acknowledgment, the mobile station shall enter the *Update Overhead Information Substate* with an origination indication within T_{34m} seconds after Layer 3 receives an indication from Layer 2 that the acknowledgment to the *Extended Channel Assignment Message* has been sent and acknowledged.

- If $ASSIGN\_MODE_r$ equals '100', the mobile station shall perform the following actions:
  - If $PACA_s$ is equal to enabled, the mobile station shall set $PACA_s$ to disabled and PACA_CANCEL to '0', shall disable the PACA state timer, and should indicate to the user that the PACA call has been canceled.
  - If $GRANTED\_MODE_r$ equals '00' and the multiplex option and radio configuration specified in the $DEFAULT\_CONFIG_r$ field are not supported by the mobile station, the mobile station shall send a *Mobile Station Reject Order* with ORDQ field set to '00000110' (capability not supported by the mobile station) and shall remain in the *Mobile Station Origination Attempt Substate*.
  - If $GRANTED\_MODE_r$ equals '11', $P\_REV\_IN\_USE_s$ is less than 11, and the mobile station did not include a SYNC_ID field in the *Origination Message* or the *Reconnect Message* that was transmitted in this substate, the mobile station shall send a *Mobile Station Reject Order* with ORDQ field set to '00000110' (capability not supported by the mobile station) and shall remain in the *Mobile Station Origination Attempt Substate*.
  - If $SYNC\_ID\_INCL_r$ is included and equals '1' and the mobile station does not have stored service configuration corresponding to $SYNC\_ID_r$ for the current SID_s and NID_s pair, the mobile station shall send a *Mobile Station Reject Order* with ORDQ field set to '00011011' (Requested stored service configuration is not available) and shall remain in the *Mobile Station Origination Attempt Substate*.
  - If $GRANTED\_MODE_r$ equals '11', $SR\_ID\_RESTORE_r$ is not equal to '111', and a service option connection record corresponding to $SR\_ID\_RESTORE_r$ is not contained in the stored service configuration, the mobile station shall send a *Mobile Station Reject Order* with ORDQ field set to '00000110' (capability not supported by the mobile station) and shall remain in the *Mobile Station Origination Attempt Substate*.

- If $GRANTED\_MODE_r$ equals '00' and $DEFAULT\_CONFIG_r$ is not equal to '100', the mobile station shall send a *Mobile Station Reject Order* with ORDQ field set to '00001110' (RC does not match with DEFAULT_CONFIG) and shall remain in the *Mobile Station Origination Attempt Substate* if one of the following conditions is true:
  - FOR_RC_r is not equal to the Radio Configuration associated with $DEFAULT\_CONFIG_r$ as specified in Table 3.7.2.3.2.21-2.
  - REV_RC_r is not equal to the Radio Configuration associated with $DEFAULT\_CONFIG_r$ as specified in Table 3.7.2.3.2.21-2.
- If the mobile station does not support either of the Radio Configurations (FOR_RC or REV_RC), the mobile station shall send a *Mobile Station Reject Order* with the ORDQ field set to '00000110' (capability not supported by the mobile station) and remain in the *Mobile Station Origination Attempt Substate*.
- If CH_IND_r = '01' and the mobile station does not support the Fundamental Channel, the mobile station shall send a *Mobile Station Reject Order* with the ORDQ field set to '00000110' (capability not supported by the mobile station) and remain in the *Mobile Station Origination Attempt Substate*.
- If CH_IND_r = '10' and the mobile station does not support the Dedicated Control Channel, the mobile station shall send a *Mobile Station Reject Order* with the ORDQ field set to '00000110' (capability not supported by the mobile station) and remain in the *Mobile Station Origination Attempt Substate*.
- If CH_IND_r = '11' and the mobile station does not support the Dedicated Control Channel and Fundamental Channel concurrently, the mobile station shall send a *Mobile Station Reject Order* with the ORDQ field set to '00000110' (capability not supported by the mobile station) and remain in the *Mobile Station Origination Attempt Substate*.
- If $FREQ\_INCL_r$ equals '1' and if the band class ($BAND\_CLASS_r$) is not supported by the mobile station, the mobile station shall send a *Mobile Station Reject Order* with ORDQ field set to '00000110' (capability not supported by the mobile station) and remain in the *Mobile Station Origination Attempt Substate*.
- If $PLCM\_TYPE_r$ equals '0010' and IMSI_O is derived from IMSI_T, or if $PLCM\_TYPE_r$ equals '0011' and IMSI_O is derived from IMSI_M, the mobile station shall send a *Mobile Station Reject Order* with the ORDQ field set to '00011100' (PLCM_TYPE mismatch) and remain in the *Mobile Station Origination Attempt Substate*.

- If $FUNDICATED\_BCMC\_IND_r$ is included and set to 1, and the mobile station does not support the BCMC reception on the Forward Fundicated Channels assigned in this message, the mobile station shall send a *Mobile Station Reject Order* with the ORDQ field set to '00000110' (capability not supported by the mobile station) and remain in the *Mobile Station Origination Attempt Substate*.
- If the mobile station does not send a Mobile Station Reject Order as specified above, it shall continue to perform the actions specified below.
- The mobile station shall set
  - $IDLE\_CDMABAND = CDMABAND_s$
  - $IDLE\_CDMACH = CDMACH_s$
- If $FREQ\_INCL_r$ equals '1', the mobile station shall set
  - $CDMABAND_s = BAND\_CLASS_r$
  - $CDMACH_s = CDMA\_FREQ_r$
- The mobile station shall store the bypass indicator ($BYPASS\_ALERT\_ANSWER_s = BYPASS\_ALERT\_ANSWER_r$).
- The mobile station shall store granted mode ($GRANTED\_MODE_s = GRANTED\_MODE_r$). If $GRANTED\_MODE_r$ equals '11', the mobile station shall perform the following:
  - The mobile station shall store service reference identifier to be restored ($SR\_ID\_RESTORE_s = SR\_ID\_RESTORE_r$).
  - If $SR\_ID\_RESTORE_r$ equals '000', the mobile station shall store bitmap of service reference identifiers to be restored ($SR\_ID\_RESTORE\_BITMAP_s = SR\_ID\_RESTORE\_BITMAP_r$).
- If $SYNC\_ID\_INCL_r$ is included and equals '1', the mobile station shall store the service configuration synchronization identifier ($SYNC\_ID_s = SYNC\_ID_r$).
- The mobile station shall store the default configuration ($DEFAULT\_CONFIG_s = DEFAULT\_CONFIG_r$).
- The mobile station shall store the Forward Traffic Channel Radio Configuration ($FOR\_RC_s = FOR\_RC_r$) and the Reverse Traffic Channel Radio Configuration ($REV\_RC_s = REV\_RC_r$).
- The mobile station shall store the frame offset ($FRAME\_OFFSET_s = FRAME\_OFFSET_r$).
- The mobile station shall store the message encryption mode indicator ($ENCRYPT\_MODE_s = ENCRYPT\_MODE_r$).
- The mobile station shall perform the procedures in 2.6.11.2.
- The mobile station shall store the Forward power control subchannel relative gain ($FPC\_SUBCHAN\_GAIN_s = FPC\_SUBCHAN\_GAIN_r$).

- The mobile station shall set $RLGAIN\_ADJ_s$ to $RLGAIN\_ADJ_r$.
- The mobile station shall set $REV\_FCH\_GATING\_MODE_s$ to $REV\_FCH\_GATING\_MODE_r$.
- The mobile station shall set $REV\_PWR\_CNTL\_DELAY_s$ to $REV\_PWR\_CNTL\_DELAY_r$ if $REV\_PWR\_CNTL\_DELAY\_INCL_r$ is equal to '1'.
- If $3XFL\_1XRL\_INCL_r$ is equal to '1', the mobile station shall set $1XRL\_FREQ\_OFFSET_s$ to $1XRL\_FREQ\_OFFSET_r$.
- The mobile station shall set $PLCM\_TYPE_s$ to $PLCM\_TYPE_r$ if $PLCM\_TYPE\_INCL_r$ is equal to '1'; otherwise, the mobile station shall set $PLCM\_TYPE_s$ as follows:
  - If $P\_REV\_IN\_USE_s$ is less than 11, set $PLCM\_TYPE_s$ to '0000'; otherwise set $PLCM\_TYPE_s$ to '0100'.
- The mobile station shall set $PLCM\_39_s$ to $PLCM\_39_r$ if $PLCM\_TYPE_r$ is equal to '0001'.
- The mobile station shall set $EARLY\_RL\_TRANSMIT\_IND_s$ to $EARLY\_RL\_TRANSMIT\_IND_r$.
- If $FIXED\_PREAMBLE\_TRANSMIT\_IND_r$ is included, the mobile station shall set $FIXED\_PREAMBLE\_TRANSMIT\_IND_s$ to $FIXED\_PREAMBLE\_TRANSMIT\_IND_r$; otherwise, the mobile station shall set $FIXED\_PREAMBLE\_TRANSMIT\_IND_s$ to '0'. If $FIXED\_PREAMBLE\_TRANSMIT\_IND_s$ equals '1', the mobile station shall set $FIXED\_NUM\_PREAMBLE_s$ to $FIXED\_NUM\_PREAMBLE_r$.
- If $TX\_PWR\_LIMIT\_INCL_r$ is set to '1', the mobile station shall perform the following:
  - If the mobile station is being assigned to operate in the 1915MHz – 1920MHz block of the PCS band, the mobile station shall store the transmit power limit $TX\_PWR\_LIMIT_s$ = ($TX\_PWR\_LIMIT_r$ - 30dB);
  - Otherwise, the mobile station shall set $TX\_PWR\_LIMIT_s$ to the limit defined in [11] for the target base station.
- The mobile station shall store the channel indicator (CH_IND_s = CH_IND_r) and the mobile station shall perform the following actions:
  - If CH_IND_r equals '01', the mobile station shall set $FPC\_FCH\_INIT\_SETPT_s$ to $FPC\_FCH\_INIT\_SETPT_r$, $FPC\_FCH\_CURR\_SETPT_s$ to $FPC\_FCH\_INIT\_SETPT_s$, $FPC\_FCH\_FER_s$ to $FPC\_FCH\_FER_r$, $FPC\_FCH\_MIN\_SETPT_s$ to $FPC\_FCH\_MIN\_SETPT_r$, $FPC\_FCH\_MAX\_SETPT_s$ to $FPC\_FCH\_MAX\_SETPT_r$, and $FPC\_PRI\_CHAN_s$ to '0' if the mobile station supports any Radio Configuration greater than 2. Then for each included member of the Active Set, the mobile station shall store the following:
    - Set the PILOT_PN field to $PILOT\_PN_r$.

- Set the ADD_PILOT_REC_INCL field to $ADD\_PILOT\_REC\_INCL_r$. If $ADD\_PILOT\_REC\_INCL_r$ equals '1', the mobile station shall store the following:
  - Set the PILOT_REC_TYPE field of PILOT_REC to $PILOT\_REC\_TYPE_r$.
  - If $PILOT\_REC\_TYPE_r$ equals '000', the mobile station shall set the TD_POWER_LEVEL field of PILOT_REC to $TD\_POWER\_LEVEL_r$ and set the TD_MODE field of PILOT_REC to TD_MODE_r.
  - If $PILOT\_REC\_TYPE_r$ is equal to '001', the mobile station shall
    - Set the AUX_PILOT_QOF field of PILOT_REC to QOF_r.
    - Set the AUX_PILOT_WALSH_CODE field of PILOT_REC to $AUX\_PILOT\_WALSH_r$ with the Walsh Code length specified by $WALSH\_LENGTH_r$.
  - If $PILOT\_REC\_TYPE_r$ is equal to '010', the mobile station shall:
    - Set the AUX_PILOT_TD_QOF field of PILOT_REC to QOF_r.
    - Set the AUX_PILOT_WALSH_CODE field of PILOT_REC to AUX_WALSH_r with the Walsh Code length specified by $WALSH\_LENGTH_r$.
    - Set the AUX_TD_POWER_LEVEL field of PILOT_REC to $AUX\_TD\_POWER\_LEVEL_r$.
    - Set the TD_MODE field of PILOT_REC to TD_MODE_r.
  - If $PILOT\_REC\_TYPE_r$ is equal to '011', the mobile station shall:
    - Set the SR3_PRIMARY_PILOT field of PILOT_REC to $SR3\_PRIMARY\_PILOT_r$.
    - Set the SR3_PILOT_POWER1 field of PILOT_REC to $SR3\_PILOT\_POWER1_r$.
    - Set the SR3_PILOT_POWER2 field of PILOT_REC to $SR3\_PILOT\_POWER2_r$.
  - If $PILOT\_REC\_TYPE_r$ is equal to '100', the mobile station shall:
    - Set the SR3_PRIMARY_PILOT field of PILOT_REC to $SR3\_PRIMARY\_PILOT_r$.
    - Set the SR3_PILOT_POWER1 field of PILOT_REC to $SR3\_PILOT\_POWER1_r$.
    - Set the SR3_PILOT_POWER2 field of PILOT_REC to $SR3\_PILOT\_POWER2_r$.
    - Set the AUX_PILOT_QOF field of PILOT_REC to QOF_r.

- Set the AUX_PILOT_WALSH_CODE field of PILOT_REC to $AUX\_PILOT\_WALSH_r$ with the Walsh Code length specified by $WALSH\_LENGTH_r$.
- If $ADD\_INFO\_INCL1_r$ is equal to '1', set the AUX_PILOT_QOF1 field of PILOT_REC to $QOF1_r$ and set the AUX_PILOT_WALSH_CODE1 field of PILOT_REC to $AUX\_PILOT\_WALSH1_r$ with the Walsh Code length specified by $WALSH\_LENGTH1_r$; otherwise, set the AUX_PILOT_QOF1 field of PILOT_REC to QOF_r and set the AUX_PILOT_WALSH_CODE1 field of PILOT_REC to $AUX\_PILOT\_WALSH_r$ with the Walsh Code length specified by $WALSH\_LENGTH_r$.
- If $ADD\_INFO\_INCL2_r$ is equal to '1', set the AUX_PILOT_QOF2 field of PILOT_REC to $QOF2_r$ and set the AUX_PILOT_WALSH_CODE2 field of PILOT_REC to $AUX\_PILOT\_WALSH2_r$ with the Walsh Code length specified by $WALSH\_LENGTH2_r$; otherwise, set the AUX_PILOT_QOF2 field of PILOT_REC to QOF_r and set the AUX_PILOT_WALSH_CODE2 field of PILOT_REC to $AUX\_PILOT\_WALSH_r$ with the Walsh Code length specified by $WALSH\_LENGTH_r$.

o Set the PWR_COMB_IND field to $PWR\_COMB\_IND_r$.

o Set the CODE_CHAN_FCH field to $CODE\_CHAN\_FCH_r$.

o Set the QOF_MASK_ID_FCH field to $QOF\_MASK\_ID\_FCH_r$.

+ If CH_IND_r equals '01' and $3X\_FCH\_INFO\_INCL_r$ equals '1', for each included member of the Active Set, the mobile station store the following:

o If $3X\_FCH\_LOW\_INCL_r$ equals '1', set the QOF_MASK_ID_FCH_LOW field to $QOF\_MASK\_ID\_FCH\_LOW_r$ and the CODE_CHAN_FCH_LOW field to $CODE\_CHAN\_FCH\_LOW_r$. Otherwise, set the QOF_MASK_ID_FCH_LOW field to $QOF\_MASK\_ID\_FCH_r$ and the CODE_CHAN_FCH_LOW to $CODE\_CHAN\_FCH_r$.

o If $3X\_FCH\_HIGH\_INCL_r$ equals '1', set the QOF_MASK_ID_FCH_HIGH field to $QOF\_MASK\_ID\_FCH\_HIGH_r$ and the CODE_CHAN_FCH_HIGH field to $CODE\_CHAN\_FCH\_HIGH_r$. Otherwise, set the QOF_MASK_ID_FCH_HIGH field to $QOF\_MASK\_ID\_FCH_r$ and the CODE_CHAN_FCH_HIGH to $CODE\_CHAN\_FCH_r$.

+ If CH_IND_r equals '10', the mobile station shall set $FPC\_DCCH\_INIT\_SETPT_s$ to $FPC\_DCCH\_INIT\_SETPT_r$, $FPC\_DCCH\_CURR\_SETPT_s$ to $FPC\_DCCH\_INIT\_SETPT_s$, $FPC\_DCCH\_FER_s$ to $FPC\_DCCH\_FER_r$, $FPC\_DCCH\_MIN\_SETPT_s$ to $FPC\_DCCH\_MIN\_SETPT_r$, $FPC\_DCCH\_MAX\_SETPT_s$ to $FPC\_DCCH\_MAX\_SETPT_r$, $FUNDICATED\_BCMC\_IND_s$ to $FUNDICATED\_BCMC\_IND_r$, and $FPC\_PRI\_CHAN_s$ to '1' if the mobile station supports any Radio Configuration greater than 2. Then for each included member of the Active Set, the mobile station shall store the following:

  - Set the PILOT_PN to $PILOT\_PN_r$.
  - Set the ADD_PILOT_REC_INCL field to ADD_PILOT_REC_INCL. If ADD_PILOT_REC_INCL is equal to '1', the mobile station shall store the following:
    - Set the PILOT_REC_TYPE field of PILOT_REC to $PILOT\_REC\_TYPE_r$.
    - If $PILOT\_REC\_TYPE_r$ equals '000', the mobile station shall set the TD_POWER_LEVEL field of PILOT_REC to $TD\_POWER\_LEVEL_r$ and set the TD_MODE field of PILOT_REC to TD_MODE_r.
    - If $PILOT\_REC\_TYPE_r$ is equal to '001', the mobile station shall
      - Set the AUX_PILOT_QOF field of PILOT_REC to QOF_r.
      - Set the AUX_PILOT_WALSH_CODE field of PILOT_REC to $AUX\_PILOT\_WALSH_r$ with the Walsh Code length specified by $WALSH\_LENGTH_r$.
    - If $PILOT\_REC\_TYPE_r$ is equal to '010', the mobile station shall:
      - Set the AUX_PILOT_TD_QOF field of PILOT_REC to QOF_r.
      - Set the AUX_PILOT_WALSH_CODE field of PILOT_REC to AUX_WALSH_r with the Walsh Code length specified by $WALSH\_LENGTH_r$.
      - Set the AUX_TD_POWER_LEVEL field of PILOT_REC to $AUX\_TD\_POWER\_LEVEL_r$.
      - Set the TD_MODE field of PILOT_REC to TD_MODE_r.
    - If $PILOT\_REC\_TYPE_r$ is equal to '011', the mobile station shall:
      - Set the SR3_PRIMARY_PILOT field of PILOT_REC to $SR3\_PRIMARY\_PILOT_r$.
      - Set the SR3_PILOT_POWER1 field of PILOT_REC to $SR3\_PILOT\_POWER1_r$.
      - Set the SR3_PILOT_POWER2 field of PILOT_REC to $SR3\_PILOT\_POWER2_r$.

◊ If $PILOT\_REC\_TYPE_r$ is equal to '100', the mobile station shall:

– Set the SR3_PRIMARY_PILOT field of PILOT_REC to $SR3\_PRIMARY\_PILOT_r$.

– Set the SR3_PILOT_POWER1 field of PILOT_REC to $SR3\_PILOT\_POWER1_r$.

– Set the SR3_PILOT_POWER2 field of PILOT_REC to $SR3\_PILOT\_POWER2_r$.

– Set the AUX_PILOT_QOF field of PILOT_REC to QOF_r.

– Set the AUX_PILOT_WALSH_CODE field of PILOT_REC to $AUX\_PILOT\_WALSH_r$ with the Walsh Code length specified by $WALSH\_LENGTH_r$.

– If $ADD\_INFO\_INCL1_r$ is equal to '1', set the AUX_PILOT_QOF1 field of PILOT_REC to $QOF1_r$ and set the AUX_PILOT_WALSH_CODE1 field of PILOT_REC to $AUX\_PILOT\_WALSH1_r$ with the Walsh Code length specified by $WALSH\_LENGTH1_r$; otherwise, set the AUX_PILOT_QOF1 field of PILOT_REC to QOF_r and set the AUX_PILOT_WALSH_CODE1 field of PILOT_REC to $AUX\_PILOT\_WALSH_r$ with the Walsh Code length specified by $WALSH\_LENGTH_r$.

– If $ADD\_INFO\_INCL2_r$ is equal to '1', set the AUX_PILOT_QOF2 field of PILOT_REC to $QOF2_r$ and set the AUX_PILOT_WALSH_CODE2 field of PILOT_REC to $AUX\_PILOT\_WALSH2_r$ with the Walsh Code length specified by $WALSH\_LENGTH2_r$; otherwise, set the AUX_PILOT_QOF2 field of PILOT_REC to QOF_r and set the AUX_PILOT_WALSH_CODE2 field of PILOT_REC to $AUX\_PILOT\_WALSH_r$ with the Walsh Code length specified by $WALSH\_LENGTH_r$.

o Set the PWR_COMB_IND field to $PWR\_COMB\_IND_r$.

o Set the CODE_CHAN_FCH field to $CODE\_CHAN\_FCH_r$.

o Set the QOF_MASK_ID_FCH field to $QOF\_MASK\_ID\_FCH_r$.

o Set the DCCH_INCL field to $DCCH\_INCL_r$. If $DCCH\_INCL_r$ equals '1', the mobile station shall store the following:

◊ Set the CODE_CHAN_DCCH field to $CODE\_CHAN\_DCCH_r$.

◊ Set the QOF_MASK_ID_DCCH field to $QOF\_MASK\_ID\_DCCH_r$.

+ If CH_IND_r equals '10' and $3X\_DCCH\_INFO\_INCL_r$ equals '1', for each included member of the Active Set, the mobile station shall store the following:

- o If $3X\_DCCH\_LOW\_INCL_r$ equals '1', set the $QOF\_MASK\_ID\_DCCH\_LOW_r$ and the CODE_CHAN_DCCH_LOW field to $CODE\_CHAN\_DCCH\_LOW_r$. Otherwise, set the QOF_MASK_ID_DCCH_LOW field to $QOF\_MASK\_ID\_FCH_r$ and the CODE_CHAN_DCCH_LOW to $CODE\_CHAN\_FCH_r$.
- o If $3X\_DCCH\_HIGH\_INCL_r$ equals '1', set the $QOF\_MASK\_ID\_DCCH\_HIGH_r$ and the CODE_CHAN_DCCH_HIGH field to $CODE\_CHAN\_DCCH\_HIGH_r$. Otherwise, set the QOF_MASK_ID_DCCH_HIGH field to $QOF\_MASK\_ID\_FCH_r$ and the CODE_CHAN_DCCH_HIGH to $CODE\_CHAN\_FCH_r$.

+ If CH_IND_r equals '10', and $FUNDICATED\_BCMC\_IND_r$ equals '1', for each included member of the Active Set, the mobile station shall store the following:
  - o Set $FOR\_CPCCH\_WALSH_s$ to $FOR\_CPCCH\_WALSH_r$.
  - o Set FOR_CPCSCH_s to FOR_CPCSCH_r.

+ If CH_IND_r equals '11', the mobile station shall set $FPC\_FCCH\_INIT\_SETPT_s$ to $FPC\_FCH\_INIT\_SETPT_r$, $FPC\_FCH\_CURR\_SETPT_s$ to $FPC\_FCH\_INIT\_SETPT_s$, $FPC\_FCH\_FER_s$ to $FPC\_FCH\_FER_r$, $FPC\_FCH\_MIN\_SETPT_s$ to $FPC\_FCH\_MIN\_SETPT_r$, $FPC\_FCH\_MAX\_SETPT_s$ to $FPC\_FCH\_MAX\_SETPT_r$, $FPC\_DCCH\_INIT\_SETPT_s$ to $FPC\_DCCH\_INIT\_SETPT_r$, $FPC\_DCCH\_CURR\_SETPT_s$ to $FPC\_DCCH\_INIT\_SETPT_s$, $FPC\_DCCH\_FER_s$ to $FPC\_DCCH\_FER_r$, $FPC\_DCCH\_MIN\_SETPT_s$ to $FPC\_DCCH\_MIN\_SETPT_r$, $FPC\_DCCH\_MAX\_SETPT_s$ to $FPC\_DCCH\_MAX\_SETPT_r$, $FPC\_PRI\_CHAN_s$ to $FPC\_PRI\_CHAN_r$, and $FUNDICATED\_BCMC\_IND_s$ to $FUNDICATED\_BCMC\_IND_r$. Then for each included member of the Active Set, the mobile station shall store the following:
  - o Set the PILOT_PN to $PILOT\_PN_r$.
  - o Set the ADD_PILOT_REC_INCL field to ADD_PILOT_REC. If ADD_PILOT_REC_INCL is equal to '1', the mobile station shall store the following:
    - ◊ Set the PILOT_REC_TYPE field of PILOT_REC to $PILOT\_REC\_TYPE_r$.
    - ◊ If $PILOT\_REC\_TYPE_r$ equals '000', the mobile station shall set the TD_POWER_LEVEL field of PILOT_REC to $TD\_POWER\_LEVEL_r$ and set the TD_MODE field of PILOT_REC to TD_MODE_r.
    - ◊ If $PILOT\_REC\_TYPE_r$ is equal to '001', the mobile station shall
      - – Set the AUX_PILOT_QOF field of PILOT_REC to QOF_r.

– Set the AUX_PILOT_WALSH_CODE field of PILOT_REC to $AUX\_PILOT\_WALSH_r$ with the Walsh Code length specified by $WALSH\_LENGTH_r$.

◊ If $PILOT\_REC\_TYPE_r$ is equal to '010', the mobile station shall:

– Set the AUX_PILOT_TD_QOF field of PILOT_REC to QOF_r.

– Set the AUX_PILOT_WALSH_CODE field of PILOT_REC to AUX_WALSH_r with the Walsh Code length specified by $WALSH\_LENGTH_r$.

– Set the AUX_TD_POWER_LEVEL field of PILOT_REC to $AUX\_TD\_POWER\_LEVEL_r$.

– Set the TD_MODE field of PILOT_REC to TD_MODE_r.

◊ If $PILOT\_REC\_TYPE_r$ is equal to '011', the mobile station shall:

– Set the SR3_PRIMARY_PILOT field of PILOT_REC to $SR3\_PRIMARY\_PILOT_r$.

– Set the SR3_PILOT_POWER1 field of PILOT_REC to $SR3\_PILOT\_POWER1_r$.

– Set the SR3_PILOT_POWER2 field of PILOT_REC to $SR3\_PILOT\_POWER2_r$.

◊ If $PILOT\_REC\_TYPE_r$ is equal to '100', the mobile station shall:

– Set the SR3_PRIMARY_PILOT field of PILOT_REC to $SR3\_PRIMARY\_PILOT_r$.

– Set the SR3_PILOT_POWER1 field of PILOT_REC to $SR3\_PILOT\_POWER1_r$.

– Set the SR3_PILOT_POWER2 field of PILOT_REC to $SR3\_PILOT\_POWER2_r$.

– Set the AUX_PILOT_QOF field of PILOT_REC to QOF_r.

– Set the AUX_PILOT_WALSH_CODE field of PILOT_REC to $AUX\_PILOT\_WALSH_r$ with the Walsh Code length specified by $WALSH\_LENGTH_r$.

– If $ADD\_INFO\_INCL1_r$ is equal to '1', set the AUX_PILOT_QOF1 field of PILOT_REC to $QOF1_r$ and set the AUX_PILOT_WALSH_CODE1 field of PILOT_REC to $AUX\_PILOT\_WALSH1_r$ with the Walsh Code length specified by $WALSH\_LENGTH1_r$; otherwise, set the AUX_PILOT_QOF1 field of PILOT_REC to QOF_r and set the AUX_PILOT_WALSH_CODE1 field of PILOT_REC to $AUX\_PILOT\_WALSH_r$ with the Walsh Code length specified by $WALSH\_LENGTH_r$.

– If $ADD\_INFO\_INCL2_r$ is equal to '1', set the AUX_PILOT_QOF2 field of PILOT_REC to $QOF2_r$ and set the AUX_PILOT_WALSH_CODE2 field of PILOT_REC to $AUX\_PILOT\_WALSH2_r$ with the Walsh Code length specified by $WALSH\_LENGTH2_r$; otherwise, set the AUX_PILOT_QOF2 field of PILOT_REC to QOF_r and set the AUX_PILOT_WALSH_CODE2 field of PILOT_REC to $AUX\_PILOT\_WALSH_r$ with the Walsh Code length specified by $WALSH\_LENGTH_r$

o Set the PWR_COMB_IND field to $PWR\_COMB\_IND_r$

o Set the CODE_CHAN_FCH field to $CODE\_CHAN\_FCH_r$.

o Set the QOF_MASK_ID_FCH field to $QOF\_MASK\_ID\_FCH_r$.

o Set the CODE_CHAN_DCCH field to $CODE\_CHAN\_DCCH_r$.

o Set the QOF_MASK_ID_DCCH field to $QOF\_MASK\_ID\_DCCH_r$.

+ If CH_IND_r equals '11' and $3X\_FCH\_INFO\_INCL_r$ equals '1', for each included member of the Active Set, the mobile station store the following:

o If $3X\_FCH\_LOW\_INCL_r$ equals '1', set the QOF_MASK_ID_FCH_LOW field to $QOF\_MASK\_ID\_FCH\_LOW_r$ and the CODE_CHAN_FCH_LOW field to $CODE\_CHAN\_FCH\_LOW_r$. Otherwise, set the QOF_MASK_ID_FCH_LOW field to $QOF\_MASK\_ID\_FCH_r$ and the CODE_CHAN_FCH_LOW to $CODE\_CHAN\_FCH_r$.

o If $3X\_FCH\_HIGH\_INCL_r$ equals '1', set the QOF_MASK_ID_FCH_HIGH field to $QOF\_MASK\_ID\_FCH\_HIGH_r$ and the CODE_CHAN_FCH_HIGH field to $CODE\_CHAN\_FCH\_HIGH_r$. Otherwise, set the QOF_MASK_ID_FCH_HIGH field to $QOF\_MASK\_ID\_FCH_r$ and the CODE_CHAN_FCH_HIGH to $CODE\_CHAN\_FCH_r$.

+ If CH_IND_r equals '11' and $FUNDICATED\_BCMC\_IND_r$ equals '1', the mobile station shall:

o Set $REV\_FCH\_ASSIGNED_s$ to $REV\_FCH\_ASSIGNED_r$.

+ If CH_IND_r equals '11' and $FUNDICATED\_BCMC\_IND_r$ equals '1', the mobile station shall set FCH_BCMC_IND to '1'; otherwise, the mobile station shall set FCH_BCMC_IND to '0'.

+ If CH_IND_r equals '11', $FUNDICATED\_BCMC\_IND_r$ equals '1', and $FOR\_CPCCH\_INFO\_INCL_r$ is included and is set to '1', for each included member of the Active Set, the mobile station shall store the following:

o Set $FOR\_CPCCH\_WALSH_s$ to $FOR\_CPCCH\_WALSH_r$.

o Set FOR_CPCSCH_s to FOR_CPCSCH_r.

+ If CH_IND_r equals '11', $FUNDICATED\_BCMC\_IND_r$ equals '1', and $ADD\_PLCM\_FOR\_FCH\_INCL_r$ is included and is set to '1', the mobile station shall store the following:
    - Set $ADD\_PLCM\_FOR\_FCH\_TYPE_s$ to $ADD\_PLCM\_FOR\_FCH\_TYPE_r$.
    - Set $ADD\_PLCM\_FOR\_FCH\_39_s$ to $ADD\_PLCM\_FOR\_FCH\_39_r$ if $ADD\_PLCM\_FOR\_FCH\_TYPE_r$ is equal to '1'.
+ If CH_IND_r equals '11' and $3X\_DCCH\_INFO\_INCL_r$ equals '1', for each included member of the Active Set, the mobile station store the following:
    - If $3X\_DCCH\_LOW\_INCL_r$ equals '1', set the QOF_MASK_ID_DCCH_LOW field to $QOF\_MASK\_ID\_DCCH\_LOW_r$ and the CODE_CHAN_DCCH_LOW field to $CODE\_CHAN\_DCCH\_LOW_r$. Otherwise, set the QOF_MASK_ID_DCCH_LOW field to $QOF\_MASK\_ID\_FCH_r$ and the CODE_CHAN_DCCH_LOW to $CODE\_CHAN\_FCH_r$.
    - If $3X\_DCCH\_HIGH\_INCL_r$ equals '1', set the QOF_MASK_ID_DCCH_HIGH field to $QOF\_MASK\_ID\_DCCH\_HIGH_r$ and the CODE_CHAN_DCCH_HIGH field to $CODE\_CHAN\_DCCH\_HIGH_r$. Otherwise, set the QOF_MASK_ID_DCCH_HIGH field to $QOF\_MASK\_ID\_FCH_r$ and the CODE_CHAN_DCCH_HIGH to $CODE\_CHAN\_FCH_r$.

– The mobile station shall initialize CODE_CHAN_LIST as described in 2.6.8, and shall set $SERV\_NEG_s$ to enabled.

– If the mobile station is currently monitoring the Paging Channel, the mobile station shall set IDLE_BCCH_CHAN to '0'; otherwise, the mobile station shall set IDLE_BCCH_CHAN to '1'. The mobile station shall set IDLE_SID to SID_s, IDLE_NID to NID_s, and IDLE_P_REV to P_REV_s.

– If $FREQ\_INCL_r$ equals '1', the mobile station shall then tune to the new frequency assignment.

– The mobile station shall then enter the *Traffic Channel Initialization Substate* of the *Mobile Station Control on the Traffic Channel State*.

• If $ASSIGN\_MODE_r$ equals '101', the mobile station shall perform the following actions:

– If $PACA_s$ is equal to enabled, the mobile station shall set $PACA_s$ to disabled and PACA_CANCEL to '0', shall disable the PACA state timer, and should indicate to the user that the PACA call has been canceled.

– If $GRANTED\_MODE_r$ equals '11', $P\_REV\_IN\_USE_s$ is less than 11, and the mobile station did not include a SYNC_ID field in the *Origination Message* or the *Reconnect Message* that was transmitted in this substate, the mobile station shall send a *Mobile Station Reject Order* with ORDQ field set to '00000110' (capability not supported by the mobile station) and shall remain in the *Mobile Station Origination Attempt Substate*.

– If $SYNC\_ID\_INCL_r$ is included and equals '1' and the mobile station does not have stored service configuration corresponding to $SYNC\_ID_r$ for the current SID_s and NID_s pair, the mobile station shall send a *Mobile Station Reject Order* with ORDQ field set to '00011011' (Requested stored service configuration is not available) and shall remain in the *Mobile Station Origination Attempt Substate*.

– If $GRANTED\_MODE_r$ equals '11', $SR\_ID\_RESTORE_r$ is not equal to '111', and a service option connection record corresponding to $SR\_ID\_RESTORE_r$ is not contained in the stored service configuration, the mobile station shall send a *Mobile Station Reject Order* with ORDQ field set to '00000110' (capability not supported by the mobile station) and shall remain in the *Mobile Station Origination Attempt Substate*.

– If the mobile station does not support any of the specified Radio Configurations (FOR_PDCH_RC, FOR_FCH_DCCH_RC or REV_FCH_DCCH_RC), the mobile station shall send a *Mobile Station Reject Order* with the ORDQ field set to '00000110' (capability not supported by the mobile station) and remain in the *Mobile Station Origination Attempt Substate*.

– If $EXT\_CH\_IND_r$ signals the allocation of a F-FCH or R-FCH and the mobile station does not support Fundamental Channel, the mobile station shall send a *Mobile Station Reject Order* with the ORDQ field set to '00000110' (capability not supported by the mobile station) and remain in the *Mobile Station Origination Attempt Substate*.

– If $EXT\_CH\_IND_r$ signals the allocation of a F-DCCH or R-DCCH and the mobile station does not support the Dedicated Control Channel, the mobile station shall send a *Mobile Station Reject Order* with the ORDQ field set to '00000110' (capability not supported by the mobile station) and remain in the *Mobile Station Origination Attempt Substate*.

– If $FREQ\_INCL_r$ equals '1' and if the band class ($BAND\_CLASS_r$) is not supported by the mobile station, the mobile station shall send a *Mobile Station Reject Order* with ORDQ field set to '00000110' (capability not supported by the mobile station) and remain in the *Mobile Station Origination Attempt Substate*.

– If $PLCM\_TYPE_r$ equals '0010' and IMSI_O is derived from IMSI_T, or if $PLCM\_TYPE_r$ equals '0011' and IMSI_O is derived from IMSI_M, the mobile station shall send a *Mobile Station Reject Order* with the ORDQ field set to '00011100' (PLCM_TYPE mismatch) and remain in the *Mobile Station Origination Attempt Substate*.

- If $FUNDICATED\_BCMC\_IND_r$ is included and set to 1, and the mobile station does not support BCMC reception on the Forward Fundicated Channels assigned in this message, the mobile station shall send a *Mobile Station Reject Order* with the ORDQ field set to '00000110' (capability not supported by the mobile station) and remain in the *Mobile Station Origination Attempt Substate*.
- If the mobile station does not send a *Mobile Station Reject Order* as specified above, it shall continue to perform the actions specified below.
- Layer 3 shall send SIG-HandoffPDCH.Indication (handoff_type = ASSIGN) to the MAC layer.
- If $FREQ\_INCL_r$ equals '1', the mobile station shall set
  - $CDMABAND_s = BAND\_CLASS_r$
  - $CDMACH_s = CDMA\_FREQ_r$
- The mobile station shall store the bypass indicator ($BYPASS\_ALERT\_ANSWER_s = BYPASS\_ALERT\_ANSWER_r$).
- The mobile station shall store the granted mode indicator ($GRANTED\_MODE_s = GRANTED\_MODE_r$). If $GRANTED\_MODE_r$ equals '11', the mobile station shall perform the following:
  - The mobile station shall store the service reference identifier to be restored ($SR\_ID\_RESTORE_s = SR\_ID\_RESTORE_r$).
  - If $SR\_ID\_RESTORE_r$ equals '000', the mobile station shall store bitmap of service reference identifiers to be restored ($SR\_ID\_RESTORE\_BITMAP_s = SR\_ID\_RESTORE\_BITMAP_r$).
  - If $SYNC\_ID\_INCL_r$ is included and equals '1', the mobile station shall store the service configuration synchronization identifier ($SYNC\_ID_s = SYNC\_ID_r$).
- The mobile station shall store the frame offset ($FRAME\_OFFSET_s = FRAME\_OFFSET_r$).
- The mobile station shall store the message encryption mode indicator ($ENCRYPT\_MODE_s = ENCRYPT\_MODE_r$).
- The mobile station shall perform the following procedures in the order listed below:
  - If $D\_SIG\_ENCRYPT\_MODE_r$ is included, the mobile station shall perform the following:

- o If $D\_SIG\_ENCRYPT\_MODE_r$ is equal to '000', the mobile station shall set $D\_SIG\_ENCRYPT\_MODE_s$ to $C\_SIG\_ENCRYPT\_MODE_s$; otherwise, the mobile station shall set $D\_SIG\_ENCRYPT\_MODE_s$ to $D\_SIG\_ENCRYPT\_MODE_r$, ENC_KEY_s to the most recently generated CMEAKEY in the mobile station associated with AUTHR of the *Origination Message*, and EXT_ENCRYPT_SEQ[0] and EXT_ENCRYPT_SEQ[1] to 256 × ENC_SEQ_H (the ENC_SEQ_H field in the *Origination Message*).

+ If $ENC\_KEY\_SIZE_r$ is included, the mobile station shall set $ENC\_KEY\_SIZE_s$ to $ENC\_KEY\_SIZE_r$.

+ If C_SIG_ENCRYPT_MODE is included, the mobile station shall set $C\_SIG\_ENCRYPT\_MODE_s$ to $C\_SIG\_ENCRYPT\_MODE_r$.

– The mobile station shall set $EXT\_CH\_IND_s$ to $EXT\_CH\_IND_r$.

– The mobile station shall set CH_IND_s to '00'.

– If $EXT\_CH\_IND_r$ signals the allocation of a F-FCH or a F-DCCH, the mobile station shall store the Forward power control subchannel relative gain [$FPC\_SUBCHAN\_GAIN_s$ = $FPC\_SUBCHAN\_GAIN_r$).

– The mobile station shall set $RLGAIN\_ADJ_s$ to $RLGAIN\_ADJ_r$.

– The mobile station shall set $PLCM\_TYPE_s$ to $PLCM\_TYPE_r$ if $PLCM\_TYPE\_INCL_r$ is equal to '1'; otherwise, the mobile station shall set $PLCM\_TYPE_s$ as follows:

+ If $P\_REV\_IN\_USE_s$ is less than 11, set $PLCM\_TYPE_s$ to '0000'; otherwise set $PLCM\_TYPE_s$ to '0100'.

– The mobile station shall set $PLCM\_39_s$ to $PLCM\_39_r$ if $PLCM\_TYPE_r$ is equal to '0001'.

– The mobile station shall set $FUNDICATED\_BCMC\_IND_s$ to $FUNDICATED\_BCMC\_IND_r$. If $FUNDICATED\_BCMC\_IND_r$ equals '1' and the $EXT\_CH\_IND_r$ signals the allocation of a F-FCH, the mobile station shall set FCH_BCMC_IND to '1'; otherwise, the mobile station shall set FCH_BCMC_IND to '0'.

– If $FUNDICATED\_BCMC\_IND_r$ equals '1' and $ADD\_PLCM\_FOR\_FCH\_INCL_r$ is included and is set to '1', the mobile station shall store the following:

+ Set $ADD\_PLCM\_FOR\_FCH\_TYPE_s$ to $ADD\_PLCM\_FOR\_FCH\_TYPE_r$.

+ Set $ADD\_PLCM\_FOR\_FCH\_39_s$ to $ADD\_PLCM\_FOR\_FCH\_39_r$ if $ADD\_PLCM\_FOR\_FCH\_TYPE_r$ is equal to '1'.

– The mobile station shall set $REV\_FCH\_GATING\_MODE_s$ to $REV\_FCH\_GATING\_MODE_r$.

– The mobile station shall set $REV\_PWR\_CNTL\_DELAY_s$ to $REV\_PWR\_CNTL\_DELAY_r$ if $REV\_PWR\_CNTL\_DELAY\_INCL_r$ is equal to '1'.

- The mobile station shall set $FULL\_CI\_FEEDBACK\_IND_s$ to $FULL\_CI\_FEEDBACK\_IND_r$.
- If $EXT\_CH\_IND_r$ equals '01000', the mobile station shall set $FOR\_CPCCH\_RATE_s$ to $FOR\_CPCCH\_RATE_r$, and $FOR\_CPCCH\_UPDATE\_RATE_s$ to $FOR\_CPCCH\_UPDATE\_RATE_r$; otherwise, the mobile station shall set $FOR\_CPCCH\_RATE_s$ to '00', and $FOR\_CPCCH\_UPDATE\_RATE_s$ to '00'.
- The mobile station shall set $REV\_CQICH\_FRAME\_OFFSET_s$ to $REV\_CQICH\_FRAME\_OFFSET_r$.
- The mobile station shall set $REV\_CQICH\_REPS_s$ to $REV\_CQICH\_REPS_r$.
- The mobile station shall set $REV\_ACKCH\_REPS_s$ to $REV\_ACKCH\_REPS_r$.
- The mobile station shall set $FOR\_PDCH\_RC_s$ to $FOR\_PDCH\_RC_r$.
- If $EXT\_CH\_IND_r$ signals the allocation of a R-PDCH, the mobile station shall set $REV\_PDCH\_RC_s$ to $REV\_PDCH\_RC_r$.
- If $EXT\_CH\_IND_r$ signals the allocation of a F-FCH, the mobile station shall set $FOR\_FCH\_RC_s$ to $FOR\_FCH\_DCCH\_RC_r$.
- If $EXT\_CH\_IND_r$ signals the allocation of a F-DCCH, the mobile station shall set $FOR\_DCCH\_RC_s$ to $FOR\_FCH\_DCCH\_RC_r$.
- If $EXT\_CH\_IND_r$ signals the allocation of a R-FCH, the mobile station shall set $REV\_FCH\_RC_s$ to $REV\_FCH\_DCCH\_RC_r$.
- If $EXT\_CH\_IND_r$ signals the allocation of a R-DCCH, the mobile station shall set $REV\_DCCH\_RC_s$ to $REV\_FCH\_DCCH\_RC_r$.
- If $EXT\_CH\_IND_r$ signals the allocation of a F-FCH and a F-DCCH, the mobile station shall set $FPC\_PRI\_CHAN_s$ to $FPC\_PRI\_CHAN_r$.
- If $EXT\_CH\_IND_r$ signals the allocation of a F-FCH, the mobile station shall set $FPC\_FCH\_INIT\_SETPT_s$ to $FPC\_FCH\_INIT\_SETPT_r$, $FPC\_FCH\_CURR\_SETPT_s$ to $FPC\_FCH\_INIT\_SETPT_s$, $FPC\_FCH\_FER_s$ to $FPC\_FCH\_FER_r$, $FPC\_FCH\_MIN\_SETPT_s$ to $FPC\_FCH\_MIN\_SETPT_r$, $FPC\_FCH\_MAX\_SETPT_s$ to $FPC\_FCH\_MAX\_SETPT_r$.
- If $EXT\_CH\_IND_r$ signals the allocation of a F-DCCH, the mobile station shall set $FPC\_DCCH\_INIT\_SETPT_s$ to $FPC\_DCCH\_INIT\_SETPT_r$, $FPC\_DCCH\_CURR\_SETPT_s$ to $FPC\_DCCH\_INIT\_SETPT_s$, $FPC\_DCCH\_FER_s$ to $FPC\_DCCH\_FER_r$, $FPC\_DCCH\_MIN\_SETPT_s$ to $FPC\_DCCH\_MIN\_SETPT_r$, $FPC\_DCCH\_MAX\_SETPT_s$ to $FPC\_DCCH\_MAX\_SETPT_r$.
- If $EARLY\_RL\_TRANSMIT\_IND_r$ is included, the mobile station shall set $EARLY\_RL\_TRANSMIT\_IND_s$ to $EARLY\_RL\_TRANSMIT\_IND_r$; otherwise, the mobile station shall set $EARLY\_RL\_TRANSMIT\_IND_s$ to '0'.

- If $FIXED\_PREAMBLE\_TRANSMIT\_IND_r$ is included, the mobile station shall set $FIXED\_PREAMBLE\_TRANSMIT\_IND_s$ to $FIXED\_PREAMBLE\_TRANSMIT\_IND_r$; otherwise, the mobile station shall set $FIXED\_PREAMBLE\_TRANSMIT\_IND_s$ to '0'. If $FIXED\_PREAMBLE\_TRANSMIT\_IND_s$ equals '1', the mobile station shall set $FIXED\_NUM\_PREAMBLE_s$ to $FIXED\_NUM\_PREAMBLE_r$.
- If $TX\_PWR\_LIMIT\_INCL_r$ is set to '1', the mobile station shall perform the following:
  - If the mobile station is being assigned to operate in the 1915MHz – 1920MHz block of the PCS band, the mobile station shall store the transmit power limit $TX\_PWR\_LIMIT_s$ = ($TX\_PWR\_LIMIT_r$ - 30dB);
  - Otherwise, the mobile station shall set $TX\_PWR\_LIMIT_s$ to the limit defined in [11] for the target base station.
- If $FOR\_PDCH\_PARMS\_INCL_r$ is equal to '1', the mobile station shall set $FOR\_PDCH\_COMMON\_PARMS_s$ = '0'; otherwise, if $FOR\_PDCH\_COMMON\_PARMS_s$ is equal to '0', the mobile station shall send a *Mobile Station Reject Order* with ORDQ equal to '00000011' (message structure not acceptable) and remain in the current state.
- If $FOR\_PDCH\_RLGAIN\_INCL_r$ is included and equal to '1', the mobile station shall set $RLGAIN\_ACKCH\_PILOT_s$ to $RLGAIN\_ACKCH\_PILOT_r$, and $RLGAIN\_CQICH\_PILOT_s$ to $RLGAIN\_CQICH\_PILOT_r$.
- If $FOR\_PDCH\_PARMS\_INCL_r$ is equal to '1', the mobile station shall set $NUM\_SOFT\_SWITCHING\_FRAMES_s$ to $NUM\_SOFT\_SWITCHING\_FRAMES_r$ + 1, and $NUM\_SOFTER\_SWITCHING\_FRAMES_s$ to $NUM\_SOFTER\_SWITCHING\_FRAMES_r$ + 1.
- If $CHM\_SWITCHING\_PARMS\_INCL_r$ is included and equal to '1', the mobile station shall set $NUM\_SOFT\_SWITCHING\_FRAMES\_CHM_s$ to $NUM\_SOFT\_SWITCHING\_FRAMES\_CHM_r$ + 1, and $NUM\_SOFTER\_SWITCHING\_FRAMES\_CHM_s$ to $NUM\_SOFTER\_SWITCHING\_FRAMES\_CHM_r$ + 1.
- If $CHM\_SWITCHING\_PARMS\_INCL_r$ is included and equal to '0', the mobile station shall set $NUM\_SOFT\_SWITCHING\_FRAMES\_CHM_s$ to $NUM\_SOFT\_SWITCHING\_FRAMES_r$ + 1, and $NUM\_SOFTER\_SWITCHING\_FRAMES\_CHM_s$ to $NUM\_SOFTER\_SWITCHING\_FRAMES_r$ + 1.
- If $FOR\_PDCH\_PARMS\_INCL_r$ is equal to '1', the mobile station shall set $NUM\_SOFT\_SWITCHING\_SLOTS_s$ according to Table 3.7.2.3.2.21-9 based on the value of $NUM\_SOFT\_SWITCHING\_SLOTS_r$.
- If $FOR\_PDCH\_PARMS\_INCL_r$ is equal to '1', the mobile station shall set $NUM\_SOFTER\_SWITCHING\_SLOTS_s$ according to Table 3.7.2.3.2.21-9 based on the value of $NUM\_SOFTER\_SWITCHING\_SLOTS_r$.

- If $CHM\_SWITCHING\_PARMS\_INCL_r$ is included and equal to '1', the mobile station shall:
  - Set $NUM\_SOFT\_SWITCHING\_SLOTS\_CHM_s$ according to Table 3.7.2.3.2.21-9 based on the value of $NUM\_SOFT\_SWITCHING\_SLOTS\_CHM_r$.
  - Set $NUM\_SOFTER\_SWITCHING\_SLOTS\_CHM_s$ according to Table 3.7.2.3.2.21-9 based on the value of $NUM\_SOFTER\_SWITCHING\_SLOTS\_CHM_r$.
- If $CHM\_SWITCHING\_PARMS\_INCL_r$ is included and equal to '0', the mobile station shall:
  - Set $NUM\_SOFT\_SWITCHING\_SLOTS\_CHM_s$ according to Table 3.7.2.3.2.21-9 based on the value of $NUM\_SOFT\_SWITCHING\_SLOTS_r$.
  - Set $NUM\_SOFTER\_SWITCHING\_SLOTS\_CHM_s$ according to Table 3.7.2.3.2.21-9 based on the value of $NUM\_SOFTER\_SWITCHING\_SLOTS_r$.
- If $FOR\_PDCH\_PARMS\_INCL_r$ is equal to '1', the mobile station shall set $PDCH\_SOFT\_SWITCHING\_DELAY_s$ to $PDCH\_SOFT\_SWITCHING\_DELAY_r + 1$, and $PDCH\_SOFTER\_SWITCHING\_DELAY_s$ to $PDCH\_SOFTER\_SWITCHING\_DELAY_r + 1$.
- If $TX\_DISABLED\_TIMER\_INCL_r$ is equal to '1', the mobile station shall set $TX\_DISABLED\_TIMER_s$ to $TX\_DISABLED\_TIMER_r$; otherwise, the mobile station shall set $TX\_DISABLED\_TIMER_s$ to T_{81m}.
- If $EXT\_CH\_IND_r$ signals the allocation of a R-PDCH, the mobile station shall:
  - Set $FOR\_GCH\_ASSIGNED_s$ to $FOR\_GCH\_ASSIGNED_r$.
  - Set $FOR\_RCCH\_ASSIGNED_s$ to $FOR\_RCCH\_ASSIGNED_r$.
  - If $FOR\_RCCH\_ASSIGNED_s$ is equal to '1', the mobile station shall:
    - Set $FOR\_RCCH\_DRC\_MODE_s$ to $FOR\_RCCH\_DRC\_MODE_r$.
    - Set $FOR\_RCCH\_REPETITION_s$ to $FOR\_RCCH\_REPETITION_r$.
    - Set $FOR\_RCCH\_UPDATE\_RATE_s$ to $FOR\_RCCH\_UPDATE\_RATE_r$.
  - If $FOR\_ACKCH\_ASSIGNED_r$ is equal to '1', the mobile station shall set $FOR\_ACKCH\_MODE_s$ to $FOR\_ACKCH\_MODE_r$.
  - If $FOR\_ACKCH\_COMB\_SEL_r$ is included, the mobile station shall set $FOR\_ACKCH\_COMB\_SEL_s$ to $FOR\_ACKCH\_COMB\_SEL_r$; otherwise, the mobile station shall set $FOR\_ACKCH\_COMB\_SEL_s$ to '0'.
  - If $REV\_PDCH\_RLGAIN\_INCL_r$ is included and equal to '1', the mobile station shall perform the following:
    - The mobile station shall set $RLGAIN\_SPICH\_PILOT_s$ to $RLGAIN\_SPICH\_PILOT_r$.
    - The mobile station shall set $RLGAIN\_REQCH\_PILOT_s$ to $RLGAIN\_REQCH\_PILOT_r$.

- o The mobile station shall set $RLGAIN\_PDCCH\_PILOT_s$ to $RLGAIN\_PDCCH\_PILOT_r$.

+ If $REV\_PDCH\_PARMS\_1\_INCL_r$ is included and equal to '1', the mobile station shall perform the following:

- o The mobile station shall set $REV\_PDCH\_TABLE\_SEL_s$ to $REV\_PDCH\_TABLE\_SEL_r$.
- o The mobile station shall set $REV\_PDCH\_MAX\_AUTO\_TPR_s$ to $REV\_PDCH\_MAX\_AUTO\_TPR_r$.

– Otherwise, the mobile station shall:

+ Set $FOR\_GCH\_ASSIGNED_s$ to NULL.
+ Set $FOR\_RCCH\_ASSIGNED_s$ to NULL.

– For each included member of the Active Set, the mobile station shall store the following:

+ Set the PILOT_PN field to $PILOT\_PN_r$.
+ Set the ADD_PILOT_REC_INCL field to $ADD\_PILOT\_REC\_INCL_r$. If $ADD\_PILOT\_REC\_INCL_r$ equals '1', the mobile station shall store the following:

- o Set the PILOT_REC_TYPE field of PILOT_REC to $PILOT\_REC\_TYPE_r$.
- o If $PILOT\_REC\_TYPE_r$ equals '000', the mobile station shall set the TD_POWER_LEVEL field of PILOT_REC to $TD\_POWER\_LEVEL_r$ and set the TD_MODE field of PILOT_REC to TD_MODE_r.
- o If $PILOT\_REC\_TYPE_r$ is equal to '001', the mobile station shall.
  - ◊ Set the AUX_PILOT_QOF field of PILOT_REC to QOF_r.
  - ◊ Set the AUX_PILOT_WALSH_CODE field of PILOT_REC to $AUX\_PILOT\_WALSH_r$ with the Walsh Code length specified by $WALSH\_LENGTH_r$.
- o If $PILOT\_REC\_TYPE_r$ is equal to '010', the mobile station shall:
  - ◊ Set the AUX_PILOT_TD_QOF field of PILOT_REC to QOF_r.
  - ◊ Set the AUX_PILOT_WALSH_CODE field of PILOT_REC to AUX_WALSH_r with the Walsh Code length specified by $WALSH\_LENGTH_r$.
  - ◊ Set the AUX_TD_POWER_LEVEL field of PILOT_REC to $AUX\_TD\_POWER\_LEVEL_r$.
  - ◊ Set the TD_MODE field of NGHBR_PILOT_REC to TD_MODE_r.
- o Set $FOR\_PDCH\_INCL_s$ to $FOR\_PDCH\_INCL_r$.
- o If $FOR\_PDCH\_INCL_r$ is equal to '1', the mobile station shall perform the following:

- ◊ If $FOR\_PDCH\_PARMS\_INCL_r$ is equal to '1', the mobile station shall store the following parameters:
  - – The mobile station shall set $WALSH\_TABLE\_ID_s$ to $WALSH\_TABLE\_ID_r$.
  - – The mobile station shall set NUM_PDCCH_s to NUM_PDCCH_r.
  - – The mobile station shall set $FOR\_PDCCH\_WALSH_s[i]$ to the ith occurrence of $FOR\_PDCCH\_WALSH_r$.
- ◊ The mobile station shall set MAC_ID_s to MAC_ID_r.
- ◊ The mobile station shall set $REV\_CQICH\_COVER_s$ to $REV\_CQICH\_COVER_r$.
- ◊ If $EXT\_CH\_IND_r$ signals the allocation of a F-CPCCH, the mobile station shall set $FOR\_CPCCH\_WALSH_s$ to $FOR\_CPCCH\_WALSH_r$,and FOR_CPCSCH_s to FOR_CPCSCH_r.
- ◊ The mobile station shall store $FOR\_PDCCH\_WALSH_s[i]$ to the ith occurrence of $FOR\_PDCCH\_WALSH_r$.

o The mobile station shall set $PWR\_COMB\_IND_s$ to $PWR\_COMB\_IND_r$.

o If $PDCH\_GROUP\_IND\_INCL_r$ is equal to '1', the mobile station shall set $PDCH\_GROUP\_IDENTIFIER_s$ as follows:

- ◊ If this is the first pilot in the list that has a F-PDCH assignment, the mobile station shall perform the following:
  - – The mobile station shall set $PDCH\_GROUP\_IDENTIFIER_s$ to '000';
- ◊ Otherwise, the mobile station shall perform the following:
  - – If $PDCH\_GROUP\_IND_r$ is set to '1', the mobile station shall set $PDCH\_GROUP\_IDENTIFIER_s$ to the same value as that of the previous pilot in the list that has a F-PDCH assigned; otherwise, the mobile station shall set $PDCH\_GROUP\_IDENTIFIER_s$ to the value one greater than that of the previous pilot in the list that has a F-PDCH assigned.

o Otherwise, the mobile station shall perform the following:

- ◊ If this is the first pilot in the list that has a F-PDCH assignment, the mobile station shall perform the following:
  - – The mobile station shall set $PDCH\_GROUP\_IDENTIFIER_s$ to '000';
- ◊ Otherwise, the mobile station shall perform the following:
  - – If F-PDCH is assigned for this pilot, the mobile station shall perform the following:

+ If $PWR\_COMB\_IND_r$ is set to '1', and there are no pilots between this pilot and the previous pilot in the list that has a F-PDCH assigned, the mobile station shall set $PDCH\_GROUP\_IDENTIFIER_s$ to the same value as that of the previous pilot in the list that has a F-PDCH assigned.

+ If $PWR\_COMB\_IND_r$ is set to '1', and all pilots between this pilot and the previous pilot in the list that has a F-PDCH assigned have PWR_COMB_IND set to '1', the mobile station shall set $PDCH\_GROUP\_IDENTIFIER_s$ to the same value as that of the previous pilot in the list that has a F-PDCH assigned.

+ Otherwise, the mobile station shall set $PDCH\_GROUP\_IDENTIFIER_s$ to the value one greater than that of the previous pilot in the list.

– Otherwise, the mobile station shall set $PDCH\_GROUP\_IDENTIFIER_s$ to NULL.

o If $EXT\_CH\_IND_r$ signals the allocation of a F-FCH, the mobile station shall set $CODE\_CHAN\_FCH_s$ to $CODE\_CHAN\_FCH_r$, and $QOF\_MASK\_ID\_FCH_s$ to $QOF\_MASK\_ID\_FCH_r$.

o If $EXT\_CH\_IND_r$ signals the allocation of a F-DCCH, the mobile station shall set $CODE\_CHAN\_DCCH_s$ to $CODE\_CHAN\_DCCH_r$, and $QOF\_MASK\_ID\_DCCH_s$ to $QOF\_MASK\_ID\_DCCH_r$.

o If $FOR\_PDCH\_INCL_r$ is equal to '1', $EXT\_CH\_IND_r$ signals the allocation of a R-PDCH, and $FOR\_ACKCH\_ASSIGNED_r$ is equal to '1', the mobile station shall set $FOR\_ACKCH\_WALSH\_INDEX_s$ to $FOR\_ACKCH\_WALSH\_INDEX_r$, and $FOR\_ACKSCH\_INDEX_s$ to $FOR\_ACKSCH\_INDEX_r$.

o If $FOR\_RCCH\_INCL_r$ is included and set to '1', the mobile station shall do the following:

◊ Set $FOR\_RCCH\_WALSH\_INDEX_s$ to $FOR\_RCCH\_WALSH\_INDEX_r$.

◊ Set $FOR\_RCSCH\_INDEX_s$ to $FOR\_RCSCH\_INDEX_r$.

o If $FOR\_PDCH\_INCL_r$ is equal to '1', and if $FOR\_GCH\_ASSIGNED_r$ is included and set to '1', the mobile station shall perform the following;

◊ Set $NUM\_FOR\_GCH_s$ to $NUM\_FOR\_GCH_r$, and

◊ For each of the $NUM\_FOR\_GCH_s$ occurrences of $FOR\_GCH\_WALSH\_INDEX_r$, the mobile station shall set $FOR\_GCH\_WALSH\_INDEX_s[j]$ to $FOR\_GCH\_WALSH\_INDEX_r[j]$.

o Otherwise, the mobile station shall perform the following:

◊ Set $NUM\_FOR\_GCH_s$ to 0, and

◊ Set $FOR\_GCH\_WALSH\_INDEX_s$ to NULL.

– The mobile station shall initialize CODE_CHAN_LIST as described in 2.6.8, and shall set $SERV\_NEG_s$ to enabled.

– If $FREQ\_INCL_r$ equals '1', the mobile station shall then tune to the new frequency assignment.

– The mobile station shall then enter the *Traffic Channel Initialization Substate* of the *Mobile Station Control on the Traffic Channel State*.

8. *Feature Notification Message:* If $RELEASE_r$ is equal to '1', the mobile station shall enter the *Mobile Station Idle State* or the *System Determination Substate* of the *Mobile Station Initialization State* with a release indication (see 2.6.1.1).

9. *Intercept Order:* The mobile station shall enter the *Mobile Station Idle State*.

10. *Local Control Order*

11. *Lock Until Power-Cycled Order:* The mobile station shall disable its transmitter and record the reason for the *Lock Until Power-Cycled Order* in the mobile station's semi-permanent memory ($LCKRSN\_P_{s-p}$ equals the least significant four bits of $ORDQ_r$). The mobile station should notify the user of the locked condition. The mobile station shall enter the *System Determination Substate* of the *Mobile Station Initialization State* with a lock indication (see 2.6.1.1), and shall not enter the *System Access State* again until after the next mobile station power-up or until it has received an *Unlock Order*. This requirement shall take precedence over any other mobile station requirement specifying entry to the *System Access State*.

12. *Maintenance Required Order:* The mobile station shall record the reason for the *Maintenance Required Order* in the mobile station's semi-permanent memory ($MAINTRSN_{s-p}$ equals the least significant four bits of $ORDQ_r$). The mobile station shall remain in the unlocked condition. The mobile station should notify the user of the maintenance required condition.

13. *PACA Message:* If $P\_REV\_IN\_USE_s$ is less than or equal to four and the mobile station does not support PACA capability, the mobile station shall send a *Mobile Station Reject Order* with the ORDQ field set to '00000110' (message requires a capability that is not supported by the mobile station); otherwise, the mobile station shall process the message as follows:

- If $PACA_s$ is equal to disabled, the mobile station shall perform the following actions:

  – If the purpose of the message is to respond to an *Origination Message* ($PURPOSE_r$ is equal to '0000'), the mobile station shall perform the following actions:

    + The mobile station shall set $PACA_s$ to enabled and shall set $PACA\_SID_s$ to SID_s.

    + The mobile station shall set the PACA state timer to the duration shown in Table 3.7.2.3.2.20-2 corresponding to the value of $PACA\_TIMEOUT_s$.

+ The mobile station should indicate to the user that the call has been queued as a PACA call, and should indicate the current queue position (Q_POS_r) of the call.
+ The mobile station shall enter the *Mobile Station Idle State*.

– If the purpose of the message is to cancel the PACA call ($PURPOSE_r$ is equal to '0011'), the mobile station shall perform the following actions:
+ The mobile station shall set $PACA_s$ to disabled and PACA_CANCEL to '0', shall disable the PACA state timer, and should indicate to the user that the PACA call has been canceled.
+ The mobile station shall enter the *Mobile Station Idle State*.

– If the purpose of the message is anything else ($PURPOSE_r$ is not equal to '0000' or '0011'), the mobile station shall ignore the message. The mobile station shall remain in the *Mobile Station Origination Attempt Substate*.

• If $PACA_s$ is equal to enabled, the mobile station shall perform the following actions:

– If the purpose of the message is to respond to an *Origination Message* ($PURPOSE_r$ is equal to '0000'), the mobile station shall perform the following actions:
+ The mobile station should indicate to the user that the PACA call is still queued, and should indicate to the user the current queue position (Q_POS_r) of the call.
+ The mobile station shall set the PACA state timer to the duration shown in Table 3.7.2.3.2.20-2 corresponding to the value of $PACA\_TIMEOUT_s$.
+ The mobile station shall enter the *Mobile Station Idle State*.

– If the purpose of the message is to provide the queue position of the PACA call ($PURPOSE_r$ is equal to '0001'), the mobile station shall perform the following actions:
+ The mobile station should indicate to the user that the PACA call is still queued, and should indicate the current queue position (Q_POS_r) of the call.
+ The mobile station shall set the PACA state timer to the duration shown in Table 3.7.2.3.2.20-2 corresponding to the value of $PACA\_TIMEOUT_s$.
+ The mobile station shall enter the *Mobile Station Idle State*.

– If the purpose of the message is to instruct the mobile station to re-originate the PACA call ($PURPOSE_r$ is equal to '0010'), the mobile station shall remain in the *Mobile Station Origination Attempt Substate*.

– If the purpose of the message is to cancel the PACA call ($PURPOSE_r$ is equal to '0011'), the mobile station shall perform the following actions:

+ The mobile station shall set $PACA_s$ to disabled, shall disable the PACA state timer, and should indicate to the user that the PACA call has been canceled.

+ The mobile station shall enter the *Mobile Station Idle State*.

14. *Registration Accepted Order:* The mobile station shall perform the procedures as specified in 2.6.11.1.

15. *Registration Rejected Order:* This order indicates that normal service is not available on this system. The mobile station shall disable the full-TMSI timer. If the received order specifies to delete the TMSI (ORDQ = '00000100'), the mobile station shall set all the bits of the $TMSI\_CODE_{s-p}$ to '1'. The mobile station shall enter the *System Determination Substate* of the *Mobile Station Initialization State* with a registration rejected indication (see 2.6.1.1).

16. *Release Order* or *Service Status Order:* If $NDSS\_ORIG_s$ is equal to enabled, the mobile station shall set $NDSS\_ORIG_s$ to disabled, and should indicate to the user that the call origination has been canceled. The mobile station shall enter the *Mobile Station Idle State* or the *System Determination Substate* of the *Mobile Station Initialization State* with a release indication (see 2.6.1.1). If the mobile station enters the *Mobile Station Idle State,* and if $PACA_s$ is equal to enabled, the mobile station shall set $PACA_s$ to disabled and PACA_CANCEL to '0', shall disable the PACA state timer, and should indicate to the user that the PACA call has been canceled.

17. *Reorder Order:* If $NDSS\_ORIG_s$ is equal to enabled, the mobile station shall set $NDSS\_ORIG_s$ to disabled, and should indicate to the user that the call origination has been canceled. If $PACA_s$ is equal to enabled, the mobile station shall set $PACA_s$ to disabled and PACA_CANCEL to '0', shall disable the PACA state timer, and should indicate to the user that the PACA call has been canceled. The mobile station shall enter the *Mobile Station Idle State*.

18. *Retry Order:* The mobile station shall process the order as follows:

- If $RETRY\_TYPE_r$ is equal to '000', the mobile station shall set $RETRY\_DELAY_s$[RETRY_TYPE] to 0, where RETRY_TYPE is equal to '001', '010', '011', '100', or '101'.

- If $RETRY\_TYPE_r$ is equal to '001', '100', or '101', then the mobile station shall perform the following:

  – If $RETRY\_DELAY_r$ is equal to '00000000', then the mobile station shall set $RETRY\_DELAY_s[RETRY\_TYPE_r]$ to 0.

  – If $RETRY\_DELAY_r$ is not equal to '00000000', the mobile station shall set $RETRY\_DELAY_s$ as follows:

    + If the most significant bit of the $RETRY\_DELAY_r$ is '0', set $RETRY\_DELAY\_UNIT_s$ to 1000ms. If the most significant bit of the $RETRY\_DELAY_r$ is '1', set $RETRY\_DELAY\_UNIT_s$ to 60000ms.

+ The mobile station shall set $RETRY\_DELAY\_VALUE_s$ to the seven least significant bits of $RETRY\_DELAY_r$.

+ The mobile station shall store the next system time 80 ms boundary + $RETRY\_DELAY\_VALUE_s \times RETRY\_DELAY\_UNIT_s$ ms as $RETRY\_DELAY_s[RETRY\_TYPE_r]$.

+ If $RETRY\_TYPE_r$ is equal to '001' or '101', and $NDSS\_ORIG_s$ is equal to enabled, the mobile station shall set $NDSS\_ORIG_s$ to disabled and should indicate to the user that the call origination has been canceled. If $PACA_s$ is equal to enabled, the mobile station shall set $PACA_s$ to disabled and PACA_CANCEL to '0', shall disable the PACA state timer, and should indicate to the user that the PACA call has been canceled.

+ If $RETRY\_TYPE_r$ is equal to '001' or '101', the mobile station shall enter the *Mobile Station Idle State*.

19. *Security Mode Command Message:* The mobile station shall perform the procedures as specified in 2.6.11.4.

20. *Service Redirection Message:* The mobile station shall process the message as follows:

    - If the mobile station is directed to an unsupported operation mode or band class, the mobile station shall respond with a *Mobile Station Reject Order* with ORDQ equal to '00000110' (message requires a capability that is not supported by the mobile station).
    - If DELETE $TMSI_r$ is equal to '1', the mobile station shall set all the bits of $TMSI\_CODE_{s\text{-}p}$ to '1'.
    - The mobile station shall disable the full-TMSI timer.
    - The mobile station shall set $RETURN\_IF\_FAIL_s = RETURN\_IF\_FAIL_r$.
    - If $RECORD\_TYPE_r$ is '00000000', the mobile station shall set $RETURN\_IF\_FAIL_s = RETURN\_IF\_FAIL_r$, and enter the *System Determination Substate* of the *Mobile Station Initialization State* with an NDSS off indication (see 2.6.1.1); otherwise:
        - if $REDIRECT\_TYPE_r$ is '0', the mobile station shall store the redirection record received in the message as $REDIRECT\_REC_s$ and shall enter the System Determination Substate of the *Mobile Station Initialization State* with a redirection indication (see 2.6.1.1).
        - if $REDIRECT\_TYPE_r$ is '1', the mobile station shall store the redirection record received in the message as $REDIRECT\_REC_s$ and shall enable $NDSS\_ORIG_s$, and shall record the dialed digits (if any). The mobile station shall enter the System Determination Substate of the *Mobile Station Initialization State* with a redirection indication (see 2.6.1.1).

21. *SSD Update Message:* The mobile station shall respond to the message as specified in 2.3.12.1.5.

22. *Status Request Message:* The mobile station shall disable the *System Access State* timer and respond to the message. If $P\_REV\_IN\_USE_s$ is less than or equal to three, the mobile station shall respond with a *Status Response Message*. If $P\_REV\_IN\_USE_s$ is greater than three, the mobile station shall respond with an *Extended Status Response Message*. If the message does not specify any qualification information ($QUAL\_INFO\_TYPE_r$ is equal to '00000000'), the mobile station shall include the requested information records in the response. If the message specifies a band class ($QUAL\_INFO\_TYPE_r$ is equal to '00000001'), the mobile station shall only include the requested information records for the specified band class ($BAND\_CLASS_r$) in the response. If the message specifies a band class and an operating mode ($QUAL\_INFO\_TYPE_r$ is equal to '00000010'), the mobile station shall only include the requested information records for the specified band class ($BAND\_CLASS_r$) and operating mode (OP_MODE_r) in the response. If the message specifies a band class or a band class and an operating mode which are not supported by the mobile station, the mobile station shall send a *Mobile Station Reject Order* with ORDQ set to '00000110' (message requires a capability that is not supported by the mobile station). If the response to this message exceeds the allowable length, the mobile station shall send a *Mobile Station Reject Order* with ORDQ set to '00001000' (response message would exceed the allowable length). If the message specifies an information record which is not supported by the mobile station for the specified band class and operating mode, the mobile station shall send a *Mobile Station Reject Order* with ORDQ set to '00001001' (information record is not supported for the specified band class and operating mode).

23. *TMSI Assignment Message:* The mobile station shall store the TMSI zone and code as follows:

    - The mobile station shall store the length of the TMSI zone field by setting $ASSIGNING\_TMSI\_ZONE\_LEN_{s-p}$ to $TMSI\_ZONE\_LEN_r$,
    - The mobile station shall store the assigning TMSI zone number by setting the $ASSIGNING\_TMSI\_ZONE\_LEN_{s-p}$ least significant octets of $ASSIGNING\_TMSI\_ZONE_{s-p}$ to $TMSI\_ZONE_r$, and
    - The mobile station shall store the TMSI code by setting $TMSI\_CODE_{s-p}$ to $TMSI\_CODE_r$.

    The mobile station shall set the TMSI expiration time by setting $TMSI\_EXP\_TIME_{s-p}$ to $TMSI\_EXP\_TIME_r$. The mobile station shall disable the full-TMSI timer. The mobile station shall then respond with a *TMSI Assignment Completion Message* within T_{56m} seconds.

24. *User Zone Reject Message*

25. *BCMC Order*: The mobile station shall process this message as follows:

    - If $ORDQ_r$ is set to '00000000', the mobile station shall perform the following for each of the BCMC flows that the base station is responding to:
        - If $CLEAR\_ALL\_RETRY\_DELAY_r$ equals '1', the mobile station shall delete the currently stored BCMC Retry Delay List.

- If $CLEAR\_RETRY\_DELAY_r$ equals '1', the mobile station shall delete the entry in the $BCMC\_RETRY\_DELAY\_LIST_s[i]$ corresponding to BCMC_FLOW_ID (See section 2.6.13.11) in this message.
- If $ALL\_BCMC\_REASON_r$ or $BCMC\_REASON_r$ equals '0000', Layer 3 shall send a *BCMC-Monitor.Response(BCMC_FLOW_ID, result=FAILURE, cause= FLOW_NOT_AVAILABLE, reason_ind=CURRENT_SYS)* for each of the corresponding BCMC_FLOW_ID to the BCMC Service Layer.
- If $ALL\_BCMC\_REASON_r$ or $BCMC\_REASON_r$ equals '0001', Layer 3 shall send a *BCMC-Monitor.Response(BCMC_FLOW_ID, result=FAILURE, cause= FLOW_NOT_TRANSMITTED, reason_ind=CURRENT_SYS)* for each of the corresponding BCMC_FLOW_ID to the BCMC Service Layer.
- If $BCMC\_REASON_r$ equals '0010' for any of the flows or $ALL\_BCMC\_REASON_r$ equals '0010', the mobile station shall enable the BCMC wait timer with a value of BSPM_WAIT_TIME seconds, shall enter the *Mobile Station Idle State* and shall wait for an updated *BCMC Service Parameters Message* as specified in 2.6.13.1.
- If $ALL\_BCMC\_REASON_r$ or $BCMC\_REASON_r$ equals '0011', Layer 3 shall send a BCMC-Monitor.Response(BCMC_FLOW_ID, result = SUCCESS, *cause = REGISTRATION_ACCEPTED*, *reason_ind = CURRENT_SYS*) for each of the corresponding BCMC_FLOW_ID to the BCMC Service Layer.
- If $ALL\_BCMC\_REASON_r$ or $BCMC\_REASON_r$ equals '0100', Layer 3 shall send a *BCMC-Monitor.Response(BCMC_FLOW_ID, result = FAILURE, cause= AUTHORIZATION_FAILURE, reason_ind = CURRENT_SYS)* for each of the corresponding BCMC_FLOW_ID to the BCMC Service Layer.
- If $ALL\_BCMC\_REASON_r$ or $BCMC\_REASON_r$ equals '0101', the mobile station shall perform the following:
  + Layer 3 shall send a *BCMC-Monitor.Response(BCMC_FLOW_ID, result=FAILURE, cause= RETRY_DELAY, reason_ind=CURRENT_SYS)* for each of the corresponding BCMC_FLOW_ID to the BCMC Service Layer.
  + For each of the corresponding BCMC_FLOW_ID, if there is a $BCMC\_RETRY\_DELAY\_LIST_s[i].BCMC\_FLOW\_ID$ which is same as BCMC_FLOW_ID (See section 2.6.13.11), the mobile station shall set $BCMC\_RETRY\_DELAY\_LIST_s[i].RETRY\_DELAY$ to current system time plus $ALL\_BCMC\_RETRY\_DELAY_r$/$BCMC\_RETRY\_DELAY_r$; otherwise, the mobile station shall add new $BCMC\_RETRY\_DELAY\_LIST_s[i]$ to the BCMC Retry Delay List and shall set $BCMC\_RETRY\_DELAY\_LIST_s[i].BCMC\_FLOW\_ID$ to the BCMC_FLOW_ID, $BCMC\_RETRY\_DELAY\_LIST_s[i].RETRY\_DELAY$ to current system time plus $ALL\_BCMC\_RETRY\_DELAY_r$/$BCMC\_RETRY\_DELAY_r$.
- If the base station indicates BCMC_REASON (indicated via $ALL\_BCMC\_REASON_r$/$BCMC\_REASON_r$) of '0000', '0001', '0011', '0100', or

'0101' for all of the flows requested, the mobile station shall enter the *Mobile Station Idle State*.

26. General Extension Message: The mobile station shall process this message as specified in section 2.6.18.

27. *Any other message:* If the mobile station receives any other message specified in Table 3.7.2.3-1, it shall ignore all Layer 3 fields. The mobile station shall ignore all other messages.

If the mobile station performs an access probe handoff or access handoff and receives any of the following messages, it shall process the message as specified in 2.6.3.1.3:

- If the mobile station is currently monitoring the Paging Channel:
    1. *System Parameters Message*
    2. *Access Parameters Message*
    3. *Neighbor List Message*
    4. *Extended System Parameters Message*
    5. *Extended Neighbor List Message*
    6. *General Neighbor List Message*
    7. *Global Service Redirection Message*
    8. *Extended Global Service Redirection Message*
- If the mobile station is currently monitoring the Primary Broadcast Control Channel:
    1. *ANSI-41 System Parameters Message*
    2. *Enhanced Access Parameters Message*
    3. *Universal Neighbor List Message*
    4. *MC-RR Parameters Message*
    5. *Extended Global Service Redirection Message*

2.6.3.6 Registration Access Substate

In this substate, the mobile station sends a *Registration Message*. If the base station responds with an authentication request, the mobile station responds in this substate.

Upon entering the *Registration Access Substate*, the mobile station shall send the *Registration Message*.

If a message received from the base station requires a Layer 2 acknowledgment and does not require a Layer 3 response, Layer 3 shall indicate to Layer 2 that no response is outstanding (see [4]).

If a message received from the base station requires a Layer 2 acknowledgment and also a Layer 3 response, Layer 3 shall indicate to Layer 2 that a response is outstanding (see [4]).

When transmitting a response to a message received from the base station, Layer 3 shall indicate to Layer 2 that the type of the message is a response (see [4]).

When transmitting an autonomous message (i.e., a message that is not sent as a response to a message received from the base station) other than the *Registration Message*, Layer 3 shall indicate to Layer 2 that the type of the message is a request other than a registration request or a message transmission request (see [4]).

When transmitting an autonomous *Registration Message* (i.e., it is not sent as a response to a *Registration Request Order* received from the base station), Layer 3 shall indicate to Layer 2 that the type of the message is a request that is a registration (see [4]).

While in this substate, the mobile station shall monitor the Paging Channel or the Forward Common Control Channel. If the mobile station declares a loss of the Paging Channel or the Forward Common Control Channel (see 2.6.3.1.8), the mobile station shall perform the following:

- If $PACA_S$ is equal to enabled, the mobile station shall set $PACA_S$ to disabled and PACA_CANCEL to '0', shall disable the PACA state timer, and should indicate to the user that the PACA call has been canceled.
- The mobile station shall declare an access attempt failure and update its registration variables as specified in 2.6.5.5.3.2.
- The mobile station shall disable its transmitter and enter the *Mobile Station Idle State*.

If the mobile station receives confirmation of delivery of any message sent by the mobile station in this substate, it shall then enter the *Mobile Station Idle State* unless:

- If the registration access was initiated due to a user direction to power down, the mobile station shall update registration variables as specified in 2.6.5.5.3.3 and may power down.
- If the mobile station has included the ENC_SEQ_H field in the *Registration Message*.
- If a message received from the base station requires a response, the mobile station shall send a response to the message in this substate.

If the mobile station receives confirmation of delivery of the *Registration Message*, the mobile station shall update its registration variables as specified in 2.6.5.5.3.1.

If the mobile station is directed by the user to originate a call, the mobile station may process the origination request as follows:

- Layer 3 shall send an L2-Supervision.Request primitive to Layer 2 to abort any access attempt in progress.
- If $PACA_S$ is equal to enabled, the mobile station shall set $PACA_S$ to disabled and PACA_CANCEL to '0', shall disable the PACA state timer, and should indicate to the user that the PACA call has been canceled.
- The mobile station shall enter the *Mobile Station Origination Attempt Substate* with an origination indication.

If $PACA_S$ is equal to enabled, the mobile station shall set PACA_CANCEL to '1' when the user directs the mobile station to cancel a PACA call.

If the mobile station is to exit the *System Access State* as a result of processing Layer 3 fields of a message requiring an acknowledgment, the mobile station shall exit the *System Access State* after Layer 3 receives an indication from Layer 2 that the acknowledgment to the message has been sent and acknowledged.

If Layer 3 receives a message other than message listed below:

- *Extended Channel Assignment Message* with DIRECT_CH_ASSIGN_IND field included and set to '1'

with an indication from Layer 2 that an access attempt for a message being transmitted was not terminated as a result of processing the Layer 2 fields of the received message, the mobile station shall ignore the received message.

The following directed messages and orders can be received. If any field value of the message or order is outside its permissible range, the mobile station may send a *Mobile Station Reject Order* with ORDQ equal to '00000100' (message field not in valid range).

1. *Authentication Challenge Message:* If the registration access was initiated due to a user direction to power down, the mobile station shall ignore the message; otherwise, the mobile station shall respond to the message as specified in 2.3.12.1.4, regardless of the value of $AUTH_S$.

2. *Authentication Request Message:* The mobile station shall process the message and shall respond as specified in 2.3.12.5.2.

3. *Base Station Challenge Confirmation Order:* If the registration access was initiated due to a user direction to power down, the mobile station shall ignore the message; otherwise, the mobile station shall respond to the message as specified in 2.3.12.1.5.

4. *Base Station Reject Order:* The mobile station shall perform the procedures as specified in 2.6.11.5.

5. *Data Burst Message*

6. *Feature Notification Message*

7. *Local Control Order*

8. *Lock Until Power-Cycled Order:* The mobile station shall disable its transmitter and record the reason for the *Lock Until Power-Cycled Order* in the mobile station's semi-permanent memory ($LCKRSN\_P_{s-p}$ equals the least significant four bits of $ORDQ_r$). The mobile station should notify the user of the locked condition. The mobile station shall enter the *System Determination Substate* of the *Mobile Station Initialization State* with a lock indication (see 2.6.1.1), and shall not enter the *System Access State* again until after the next mobile station power-up or until it has received an *Unlock Order*. This requirement shall take precedence over any other mobile station requirement specifying entry to the *System Access State*.

9. *Maintenance Required Order:* The mobile station shall record the reason for the *Maintenance Required Order* in the mobile station's semi-permanent memory ($MAINTRSN_{s-p}$ equals the least significant four bits of $ORDQ_r$). The mobile station shall remain in the unlocked condition. The mobile station should notify the user of the maintenance required condition.

10. *PACA Message:* If $P\_REV\_IN\_USE_s$ is less than or equal to four and the mobile station does not support PACA capability, the mobile station shall send a *Mobile Station Reject Order* with the ORDQ field set to '00000110' (message requires a capability that is not supported by the mobile station); otherwise, the mobile station shall process the message as follows:

    If $PACA_s$ is equal to disabled, the mobile station shall send a *Mobile Station Reject Order* with the ORDQ field set to '00000010' (message not accepted in this state).

    If $PACA_s$ is equal to enabled, the mobile station shall perform the following:

    - If the purpose of the message is to respond to an *Origination Message* ($PURPOSE_r$ is equal to '0000'), the mobile station shall send a *Mobile Station Reject Order* with the ORDQ field set to '00000010' (message not accepted in this state).
    - If the purpose of the message is to provide the queue position of the PACA call ($PURPOSE_r$ is equal to '0001'), the mobile station shall set the PACA state timer to the duration shown in Table 3.7.2.3.2.20-2 corresponding to the value of $PACA\_TIMEOUT_s$, should indicate to the user that the PACA call is still queued, and should indicate to the user the current queue position (Q_POS_r) of the call.
    - If the purpose of the message is to instruct the mobile station to re-originate the PACA call ($PURPOSE_r$ is equal to '0010'), Layer 3 shall send an L2-Supervision.Request primitive to Layer 2 to abort any access attempt in progress, shall set the PACA state timer to the duration shown in Table 3.7.2.3.2.20-2 corresponding to the value of $PACA\_TIMEOUT_s$, and shall enter the *Mobile Station Origination Attempt Substate* with a PACA response indication.
    - If the purpose of the message is to cancel the PACA call ($PURPOSE_r$ is equal to '0011'), the mobile station shall set $PACA_s$ to disabled and PACA_CANCEL to '0', shall disable the PACA state timer, and should indicate to the user that the PACA call has been canceled.

11. *Registration Accepted Order:* The mobile station shall perform the procedures specified in 2.6.11.1

12. *Registration Rejected Order:* This order indicates that normal service is not available on this system. The mobile station shall disable the full-TMSI timer. If the received order specifies to delete the TMSI (ORDQ = '00000100'), the mobile station shall set all the bits of the $TMSI\_CODE_{s-p}$ to '1'. The mobile station shall enter the *System Determination Substate* of the *Mobile Station Initialization State* with a registration rejected indication (see 2.6.1.1).

13. *Release Order:* If $NDSS\_ORIG_s$ is equal to enabled, the mobile station shall set $NDSS\_ORIG_s$ to disabled, and should indicate to the user that the call origination has been canceled. The mobile station shall enter the *Mobile Station Idle State* or the *System Determination Substate* of the *Mobile Station Initialization State* with a release indication (see 2.6.1.1). If the mobile station enters the *Mobile Station Idle State*, and if $PACA_s$ is equal to enabled, the mobile station shall set $PACA_s$ to disabled and PACA_CANCEL to '0', shall disable the PACA state timer, and should indicate to the user that the PACA call has been canceled.

14. *Retry Order:* The mobile station shall process the message as follows:
    - If $RETRY\_TYPE_r$ is equal to '000', the mobile station shall set $RETRY\_DELAY_s$[RETRY_TYPE] to 0, where RETRY_TYPE is equal to '001', '010', '011', '100', or '101'.
    - If $RETRY\_TYPE_r$ is equal to '001', '100', or '101', the mobile station shall perform the following:
        - If $RETRY\_DELAY_r$ is equal to '00000000', then the mobile station shall set $RETRY\_DELAY_s[RETRY\_TYPE_r]$ to 0.
        - If $RETRY\_DELAY_r$ is not equal to '00000000', the mobile station shall set $RETRY\_DELAY_s[RETRY\_TYPE_r]$ as follows:
            + If the most significant bit of the $RETRY\_DELAY_r$ is '0', set $RETRY\_DELAY\_UNIT_s$ to 1000ms. If the most significant bit of the $RETRY\_DELAY_r$ is '1', set $RETRY\_DELAY\_UNIT_s$ to 60000ms.
            + The mobile station shall set $RETRY\_DELAY\_VALUE_s$ to the seven least significant bits of $RETRY\_DELAY_r$.
            + The mobile station shall store the next system time 80 ms boundary + $RETRY\_DELAY\_VALUE_s \times RETRY\_DELAY\_UNIT_s$ ms as $RETRY\_DELAY_s[RETRY\_TYPE_r]$.

15. *Security Mode Command Message:* The mobile station shall perform the procedures as specified in 2.6.11.4.

16. *Service Redirection Message:* The mobile station shall process the message as follows:
    - If the mobile station is directed to an unsupported operation mode or band class, the mobile station shall respond with a *Mobile Station Reject Order* with ORDQ equal to '00000110' (message requires a capability that is not supported by the mobile station).
    - If $DELETE\_TMSI_r$ is equal to '1', the mobile station shall set all the bits of $TMSI\_CODE_{s\text{-}p}$ to '1'. The mobile station shall disable the full-TMSI timer.
    - The mobile station shall set $RETURN\_IF\_FAIL_s = RETURN\_IF\_FAIL_r$.

- If $RECORD\_TYPE_r$ is equal to '00000000', the mobile station shall enter the *System Determination Substate* of the *Mobile Station Initialization State* with an NDSS off indication (see 2.6.1.1); otherwise, the mobile station shall store the redirection record received in the message as $REDIRECT\_REC_s$ and shall enter the *System Determination Substate* of the *Mobile Station Initialization State* with a redirection indication (see 2.6.1.1).

17. *SSD Update Message:* If the registration access was initiated due to a user direction to power down, the mobile station shall ignore the message. Otherwise, the mobile station shall respond to the message as specified in 2.3.12.1.5.

18. *Status Request Message:* The mobile station shall disable the *System Access State* timer and respond to the message. If $P\_REV\_IN\_USE_s$ is less than or equal to three, the mobile station shall respond with a *Status Response Message*. If $P\_REV\_IN\_USE_s$ is greater than three, the mobile station shall respond with an *Extended Status Response Message*. If the message does not specify any qualification information ($QUAL\_INFO\_TYPE_r$ is equal to '00000000'), the mobile station shall include the requested information records in the response. If the message specifies a band class ($QUAL\_INFO\_TYPE_r$ is equal to '00000001'), the mobile station shall only include the requested information records for the specified band class ($BAND\_CLASS_r$) in the response. If the message specifies a band class and an operating mode ($QUAL\_INFO\_TYPE_r$ is equal to '00000010'), the mobile station shall only include the requested information records for the specified band class ($BAND\_CLASS_r$) and operating mode (OP_MODE_r) in the response.

    If the message specifies a band class or a band class and an operating mode which are not supported by the mobile station, the mobile station shall send a *Mobile Station Reject Order* with ORDQ set to '00000110' (message requires a capability that is not supported by the mobile station). If the response to this message exceeds the allowable length, the mobile station shall send a *Mobile Station Reject Order* with ORDQ set to '00001000' (response message would exceed the allowable length). If the message specifies an information record which is not supported by the mobile station for the specified band class and operating mode, the mobile station shall send a *Mobile Station Reject Order* with ORDQ set to '00001001' (information record is not supported for the specified band class and operating mode).

19. *TMSI Assignment Message:* The mobile station shall store the TMSI zone and code as follows:

    - The mobile station shall store the length of the TMSI zone field by setting $ASSIGNING\_TMSI\_ZONE\_LEN_{s\text{-}p}$ to $TMSI\_ZONE\_LEN_r$;
    - The mobile station shall store the assigning TMSI zone number by setting the $ASSIGNING\_TMSI\_ZONE\_LEN_{s\text{-}p}$ least significant octets of $ASSIGNING\_TMSI\_ZONE_{s\text{-}p}$ to $TMSI\_ZONE_r$, and
    - The mobile station shall store the TMSI code by setting $TMSI\_CODE_{s\text{-}p}$ to $TMSI\_CODE_r$.

The mobile station shall set the TMSI expiration time by setting $TMSI\_EXP\_TIME_{s-p}$ to $TMSI\_EXP\_TIME_r$. The mobile station shall disable the full-TMSI timer. The mobile station shall then respond with a *TMSI Assignment Completion Message* within T_{56m} seconds.

20. *User Zone Reject Message*

21. *General Page Message* or *Universal Page Message*: If the mobile station receives a mobile-station-addressed page, the mobile station may determine if there is a page match (see 2.6.2.3). If a match is declared, the mobile station shall perform the following:

    - Layer 3 shall send an L2-Supervision.Request primitive to Layer 2 to abort any access attempt in progress.
    - The mobile station shall enter the *Page Response Substate*.

22. *Extended Channel Assignment Message:* If the $DIRECT\_CH\_ASSIGN\_IND_r$ is included and is set to '1', the mobile station shall perform the following:

    - Layer 3 shall send an L2-Supervision.Request primitive to Layer 2 to abort any access attempt in progress.
    - The mobile station shall process the message as specified in section 2.6.3.3.

    Otherwise, the mobile station shall ignore this message.

23. *Fast Call Setup Order*

    - If $ORDQ_r$ is equal to '00000000', the mobile station shall process the message and respond with a *Fast Call Setup Order* as specified in 2.6.12.1.
    - If $ORDQ_r$ is equal to '00000001', the mobile station shall process the message as specified in 2.6.12.1.

24. General Extension Message: The mobile station shall process this message as specified in section 2.6.18.

25. *Any other message:* If the mobile station receives any other message specified in Table 3.7.2.3-1, it shall ignore all Layer 3 fields. The mobile station shall ignore all other messages.

2.6.3.7 Mobile Station Message Transmission Substate

In this substate, the mobile station sends a *Data Burst Message*, a *Device Information Message*, a *Radio Environment Message*, or a *Fast Call Setup Order*. If the base station responds with an authentication request, the mobile station responds in this substate.

Support of this substate is optional.

If a message received from the base station requires a Layer 2 acknowledgment and does not require a Layer 3 response, Layer 3 shall indicate to Layer 2 that no response is outstanding (see [4]).

If a message received from the base station requires a Layer 2 acknowledgment and also a Layer 3 response, Layer 3 shall indicate to Layer 2 that a response is outstanding (see [4]).

When transmitting a response to a message received from the base station, Layer 3 shall indicate to Layer 2 that the type of the message is a response (see [4]).

When transmitting an autonomous message (i.e., a message that is not sent as a response to a message received from the base station) other than the *Data Burst Message*, Layer 3 shall indicate to Layer 2 that the message is a request other than a registration request or a message transmission request (see [4]).

When transmitting an autonomous *Data Burst Message*, Layer 3 shall indicate to Layer 2 that the type of the message is a request that is a message transmission (see [4]).

The mobile station shall not send any Short Data Burst (see [30], [42]) until the maximum of the system time stored in $RETRY\_DELAY_S[100]$ and $RETRY\_DELAY_S[101]$.

Upon entering the *Mobile Station Message Transmission Substate*, the mobile station shall transmit the message as follows:

- The mobile station shall exit the *Mobile Station Message Transmission Substate*, shall enter either the *Mobile Station Idle State* or the *System Determination Substate* with an ACCT blocked indication, and should indicate to the user that the message transmission has terminated if all of the following conditions are true:
  - $P\_REV\_IN\_USE_S$ is greater than six,
  - ACCT is enabled for the service option number associated with the *Data Burst Message*, due to either of the following two conditions:
    - The service option number associated with the *Data Burst Message* is equal to an ACCT_SO entry in ACCT_SO_LIST, or
    - The service option group number of the service option associated with the *Data Burst Message* is equal to an ACCT_SO_GRP entry in ACCT_SO_GRP_LIST.
- If the mobile station entered this substate with a message transmission indication, the mobile station shall transmit the *Data Burst Message* to the base station.
- If the mobile station entered this substate with a hook status indication, the mobile station shall set the autonomous message timer equal to AUTO_MSG_INTERVALs and shall start the timer. The mobile station shall transmit the Device Information Message to the base station, with the RECORD_TYPE field of the message set to 00100000 and the Hook Indicator field set to the current hook status.
- If the mobile station entered this substate with a radio environment report indication, the mobile station shall transmit the *Radio Environment Message* to the base station in assured mode, and increment RER_COUNT upon receiving confirmation of delivery. If, after incrementing, RER_COUNT is equal to $RER\_MAX\_NUM\_MSG_S$, the mobile station shall set RER_MODE_ENABLED to NO.

  If RER_MODE_ENABLED is set to NO and TKZ_MODE_PENDING is equal to YES, the mobile station shall perform the following:
  - Set TKZ_MODE_ENABLED to YES and TKZ_MODE_PENDING to NO.

- If TKZ_SID_S is equal to SID_S, TKZ_NID_S is equal to NID_S, and $TKZ\_MODE\_SUPPORTED_S$ is equal to '1', initialize the tracking zone list (TKZ_LIST) to contain TKZ_ID_S; otherwise, initialize the tracking zone list to NULL.
- Enable the tracking zone update timer with an initial value of infinity if $TKZ\_UPDATE\_PRD_S$ is equal to '1111'; otherwise, the mobile station shall enable the tracking zone update timer with an initial value of $2^{TKZ\_UPDATE\_PRD_S + 6}$ seconds.

• If the mobile station entered this substate with a tracking zone indication, the mobile station shall perform the following:

- The mobile station shall transmit the *Radio Environment Message* to the base station.
- If the mobile station receives confirmation of delivery of *Radio Environment Message*, the mobile station shall add TKZ_ID_S to TKZ_LIST. For all entries of TKZ_LIST whose TKZ timer is not active, other than TKZ_ID_S, enable the TKZ timer with the duration specified by TKZ_TIMER_S. If TKZ_LIST contains more than $TKZ\_LIST\_LEN_S + 1$ entries, the entry with active TKZ timer with smallest remaining TKZ timer value shall be removed from the list before adding the new entry.
- The mobile station shall increment TKZ_COUNT upon receiving confirmation of delivery. If, after incrementing, TKZ_COUNT is equal to $TKZ\_MAX\_NUM\_MSG_S$, the mobile station shall disable the tracking zone update timer and set TKZ_MODE_ENABLED to NO.

• If the mobile station entered this substate with a fast call setup indication, the mobile station shall transmit the *Fast Call Setup Order* (ORDQ = '00000000') to the base station as follows:

- If the mobile station requests operation in the reduced slot cycle mode, the mobile station shall set the RSC_MODE_IND field to '1' and perform the following:
  + Set RSC_MODE_ENABLED to YES.
  + Set the RSC_END_TIME_UNIT and RSC_END_TIME_VALUE fields as specified in 2.7.3.6, and store the system time specified by these fields as RSC_END_TIME.
  + Set the RSCI field as specified in 2.7.3.6 and store it as $RSCI_S$; if $RSCI_S$ is equal to '0111', set $SLOTTED_S$ to NO.
  + Set $IGNORE\_QPCH_S$ to '1'.
- Otherwise, the mobile station shall set the RSC_MODE_IND field to '0'.

While in this substate, the mobile station shall monitor the Paging Channel or the Forward Common Control Channel. If the mobile station declares a loss of the Paging Channel or

the Forward Common Control Channel (see 2.6.3.1.8), the mobile station shall perform the following:

- If $PACA_S$ is equal to enabled, the mobile station shall set $PACA_S$ to disabled and PACA_CANCEL to '0', shall disable the PACA state timer, and should indicate to the user that the PACA call has been canceled.
- The mobile station shall declare an access attempt failure and update its registration variables as specified in 2.6.5.5.3.2.
- The mobile station shall disable its transmitter and enter the *Mobile Station Idle State*.

If the mobile station receives confirmation of any message sent by the mobile station in this substate, it shall send a response in this substate if required and shall then enter the *Mobile Station Idle State*.

If $PACA_S$ is equal to enabled, the mobile station shall set PACA_CANCEL to '1' when the user directs the mobile station to cancel a PACA call.

If the mobile station is to exit the *System Access State* as a result of processing Layer 3 fields of a message requiring an acknowledgment, the mobile station shall exit the *System Access State* after Layer 3 receives an indication from Layer 2 that the acknowledgment to the message has been sent and acknowledged.

If Layer 3 receives a message other than message listed below:

- *Extended Channel Assignment Message* with DIRECT_CH_ASSIGN_IND field included and set to '1'

with an indication from Layer 2 that an access attempt for a message being transmitted was not terminated as a result of processing the Layer 2 fields of the received message, the mobile station shall ignore the received message.

The following directed messages and orders can be received. If any field value of the message or order is outside its permissible range, the mobile station may send a *Mobile Station Reject Order* with ORDQ equal to '00000100' (message field not in valid range).

1. *Authentication Challenge Message:* The mobile station shall respond to the message as specified in 2.3.12.1.4, regardless of the value of $AUTH_S$.
2. *Authentication Request Message:* The mobile station shall process the message and shall respond as specified in 2.3.12.5.2.
3. *Base Station Challenge Confirmation Order:* The mobile station shall respond to the message as specified in 2.3.12.1.5.
4. *Base Station Reject Order:* The mobile station shall perform the procedures as specified in 2.6.11.5.
5. *Data Burst Message*
6. *Local Control Order*
7. *Lock Until Power-Cycled Order:* The mobile station shall disable its transmitter and record the reason for the *Lock Until Power-Cycled Order* in the mobile station's

semi-permanent memory ($LCKRSN\_P_{s-p}$ equals the least significant four bits of $ORDQ_r$). The mobile station should notify the user of the locked condition. The mobile station shall enter the *System Determination Substate* of the *Mobile Station Initialization State* with a lock indication (see 2.6.1.1), and shall not enter the *System Access State* again until after the next mobile station power-up or until it has received an *Unlock Order*. This requirement shall take precedence over any other mobile station requirement specifying entry to the *System Access State*.

8. *Maintenance Required Order:* The mobile station shall record the reason for the *Maintenance Required Order* in the mobile station's semi-permanent memory ($MAINTRSN_{s-p}$ equals the least significant four bits of $ORDQ_r$). The mobile station shall remain in the unlocked condition. The mobile station should notify the user of the maintenance required condition.

9. *PACA Message:* If $P\_REV\_IN\_USE_s$ is less than or equal to four and the mobile station does not support PACA capability, the mobile station shall send a *Mobile Station Reject Order* with the ORDQ field set to '00000110' (message requires a capability that is not supported by the mobile station); otherwise, the mobile station shall process the message as follows:

   If $PACA_s$ is equal to disabled, the mobile station shall send a *Mobile Station Reject Order* with the ORDQ field set to '00000010' (message not accepted in this state).

   If $PACA_s$ is equal to enabled, the mobile station shall perform the following:

   - If the purpose of the message is to respond to an *Origination Message* ($PURPOSE_r$ is equal to '0000'), the mobile station shall send a *Mobile Station Reject Order* with the ORDQ field set to '00000010' (message not accepted in this state).
   - If the purpose of the message is to provide the queue position of the PACA call ($PURPOSE_r$ is equal to '0001'), the mobile station shall set the PACA state timer to the duration shown in Table 3.7.2.3.2.20-2 corresponding to the value of $PACA\_TIMEOUT_s$, should indicate to the user that the PACA call is still queued, and should indicate to the user the current queue position (Q_POS_r) of the call.
   - If the purpose of the message is to instruct the mobile station to re-originate the PACA call ($PURPOSE_r$ is equal to '0010'), Layer 3 shall send an L2-Supervision.Request primitive to Layer 2 to abort any access attempt in progress, shall set the PACA state timer to the duration shown in Table 3.7.2.3.2.20-2 corresponding to the value of $PACA\_TIMEOUT_s$, and shall enter the *Mobile Station Origination Attempt Substate* with a PACA response indication.
   - If the purpose of the message is to cancel the PACA call ($PURPOSE_r$ is equal to '0011'), the mobile station shall set $PACA_s$ to disabled and PACA_CANCEL to '0', shall disable the PACA state timer, and should indicate to the user that the PACA call has been canceled.

10. *Registration Accepted Order:* The mobile station shall perform the procedures as specified in 2.6.11.1.

11. *Registration Rejected Order:* This order indicates that normal service is not available on this system. The mobile station shall disable the full-TMSI timer. If the received order specifies to delete the TMSI (ORDQ = '00000100'), the mobile station shall set all the bits of the $TMSI\_CODE_{s\text{-}p}$ to '1'. The mobile station shall enter the *System Determination Substate* of the *Mobile Station Initialization State* with a registration rejected indication (see 2.6.1.1).

12. *Retry Order:* The mobile station shall process the message as follows:

    - If $RETRY\_TYPE_r$ is equal to '000', the mobile station shall set $RETRY\_DELAY_s$[RETRY_TYPE] to 0, where RETRY_TYPE is equal to '001', '010', '011', '100', or '101'.
    - If $RETRY\_TYPE_r$ is equal to '001', '100', or '101', the mobile station shall perform the following:
      - If $RETRY\_DELAY_r$ is equal to '00000000', then the mobile station shall set $RETRY\_DELAY_s[RETRY\_TYPE_r]$ to 0.
      - If $RETRY\_DELAY_r$ is not equal to '00000000', the mobile station shall set $RETRY\_DELAY_s[RETRY\_TYPE_r]$ as follows:
        + If the most significant bit of the $RETRY\_DELAY_r$ is '0', set $RETRY\_DELAY\_UNIT_s$ to 1000ms. If the most significant bit of the $RETRY\_DELAY_r$ is '1', set $RETRY\_DELAY\_UNIT_s$ to 60000ms.
        + The mobile station shall set $RETRY\_DELAY\_VALUE_s$ to the seven least significant bits of $RETRY\_DELAY_r$.
        + The mobile station shall store the next system time 80 ms boundary + $RETRY\_DELAY\_VALUE_s \times RETRY\_DELAY\_UNIT_s$ ms as $RETRY\_DELAY_s[RETRY\_TYPE_r]$.

13. *Security Mode Command Message:* The mobile station shall perform the procedures as specified in 2.6.11.4.

14. *Service Redirection Message:* The mobile station shall process the message as follows:

    - If the mobile station is directed to an unsupported operation mode or band class, the mobile station shall respond with a *Mobile Station Reject Order* with ORDQ equal to '00000110' (message requires a capability that is not supported by the mobile station).
    - If $DELETE\_TMSI_r$ is equal to '1', the mobile station shall set all the bits of $TMSI\_CODE_{s\text{-}p}$ to '1'. The mobile station shall disable the full-TMSI timer.
    - The mobile station shall set $RETURN\_IF\_FAIL_s = RETURN\_IF\_FAIL_r$.

- If $RECORD\_TYPE_r$ is equal to '00000000', the mobile station shall enter the *System Determination Substate* of the *Mobile Station Initialization State* with an NDSS off indication (see 2.6.1.1); otherwise, the mobile station shall store the redirection record received in the message as $REDIRECT\_REC_s$ and shall enter the *System Determination Substate* of the *Mobile Station Initialization State* with a redirection indication (see 2.6.1.1).

15. *SSD Update Message:* The mobile station shall respond to the message as specified in 2.3.12.1.5.

16. *Status Request Message:* The mobile station shall disable the *System Access State* timer and respond to the message. If $P\_REV\_IN\_USE_s$ is less than or equal to three, the mobile station shall respond with a *Status Response Message*. If $P\_REV\_IN\_USE_s$ is greater than three, the mobile station shall respond with an *Extended Status Response Message*. If the message does not specify any qualification information ($QUAL\_INFO\_TYPE_r$ is equal to '00000000'), the mobile station shall include the requested information records in the response. If the message specifies a band class ($QUAL\_INFO\_TYPE_r$ is equal to '00000001'), the mobile station shall only include the requested information records for the specified band class ($BAND\_CLASS_r$) in the response. If the message specifies a band class and an operating mode ($QUAL\_INFO\_TYPE_r$ is equal to '00000010'), the mobile station shall only include the requested information records for the specified band class ($BAND\_CLASS_r$) and operating mode (OP_MODE_r) in the response.

    If the message specifies a band class or a band class and an operating mode which is not supported by the mobile station, the mobile station shall send a *Mobile Station Reject Order* with ORDQ set to '00000110' (message requires a capability that is not supported by the mobile station). If the response to this message exceeds the allowable length, the mobile station shall send a *Mobile Station Reject Order* with ORDQ set to '00001000' (response message would exceed the allowable length). If the message specifies an information record which is not supported by the mobile station for the specified band class and operating mode, the mobile station shall send a *Mobile Station Reject Order* with ORDQ set to '00001001' (information record is not supported for the specified band class and operating mode).

17. *TMSI Assignment Message:* The mobile station shall store the TMSI zone and code as follows:

    - The mobile station shall store the length of the TMSI zone field by setting $ASSIGNING\_TMSI\_ZONE\_LEN_{s-p}$ to $TMSI\_ZONE\_LEN_r$,
    - The mobile station shall store the assigning TMSI zone number by setting the $ASSIGNING\_TMSI\_ZONE\_LEN_{s-p}$ least significant octets of $ASSIGNING\_TMSI\_ZONE_{s-p}$ to $TMSI\_ZONE_r$, and
    - The mobile station shall store the TMSI code by setting $TMSI\_CODE_{s-p}$ to $TMSI\_CODE_r$.

    The mobile station shall set the TMSI expiration time by setting $TMSI\_EXP\_TIME_{s-p}$ to $TMSI\_EXP\_TIME_r$. The mobile station shall disable the

full-TMSI timer. The mobile station shall then respond with a *TMSI Assignment Completion Message* within T_{56m} seconds.

18. *General Page Message* or *Universal Page Message*: If the mobile station receives a mobile-station-addressed page, the mobile station may determine whether there is a page match (see 2.6.2.3). If a match is declared, the mobile station shall perform the following:
    - Layer 3 shall send an L2-Supervision.Request primitive to Layer 2 to abort any access attempt in progress.
    - If the mobile station entered this substate with a message transmission indication, the mobile station may store the *Data Burst Message* for later transmission.
    - The mobile station shall enter the *Page Response Substate*.
19. *Extended Channel Assignment Message:* If the $DIRECT\_CH\_ASSIGN\_IND_r$ is included and is set to '1', the mobile station shall perform the following:
    - If the mobile station entered this substate with a message transmission indication, the mobile station may store the *Data Burst Message* for later transmission.
    - Layer 3 shall send an L2-Supervision.Request primitive to Layer 2 to abort any access attempt in progress.
    - The mobile station shall process the message as specified in section 2.6.3.3.

    Otherwise, the mobile station shall ignore this message.
20. *Fast Call Setup Order*:
    - If $ORDQ_r$ is equal to '00000000', the mobile station shall process the message and respond with a *Fast Call Setup Order* as specified in 2.6.12.1.
    - If $ORDQ_r$ is equal to '00000001', the mobile station shall process the message as specified in 2.6.12.1.
21. General Extension Message: The mobile station shall process this message as specified in section 2.6.18.
22. *Any other message:* If the mobile station receives any other message specified in Table 3.7.2.3-1, it shall ignore all Layer 3 fields. The mobile station shall ignore all other messages.

2.6.3.8 PACA Cancel Substate

In this substate, the mobile station sends a *PACA Cancel Message*. If the base station responds with an authentication request, the mobile station responds in this substate.

Upon entering the *PACA Cancel Substate*, the mobile station shall transmit the *PACA Cancel Message*.

If a message received from the base station requires a Layer 2 acknowledgment and does not require a Layer 3 response, Layer 3 shall indicate to Layer 2 that no response is outstanding (see [4]).

If a message received from the base station requires a Layer 2 acknowledgment and also a Layer 3 response, Layer 3 shall indicate to Layer 2 that a response is outstanding (see [4]).

When transmitting a response to a message received from the base station, Layer 3 shall indicate to Layer 2 that the type of the message is a response (see [4]).

When transmitting an autonomous message (i.e., a message that is not sent as a response to a message received from the base station), Layer 3 shall indicate to Layer 2 that the type of the message is a request other than a registration request or a message transmission request (see [4]).

While in this substate, the mobile station shall monitor the Paging Channel or the Forward Common Control Channel. If the mobile station declares a loss of the Paging Channel or the Forward Common Control Channel (see 2.6.3.1.8), it shall declare an access attempt failure and update its registration variables as specified in 2.6.5.5.3.2, disable its transmitter and enter the *Mobile Station Idle State*. If the mobile station receives confirmation of any message sent by the mobile station in this substate, it shall send a response in this substate if required and shall then enter the *Mobile Station Idle State*.

If the mobile station is to exit the *System Access State* as a result of processing Layer 3 fields of a message requiring an acknowledgment, the mobile station shall exit the *System Access State* after Layer 3 receives an indication from Layer 2 that the acknowledgment to the message has been sent and acknowledged.

If Layer 3 receives a message other than message listed below:

- *Extended Channel Assignment Message* with DIRECT_CH_ASSIGN_IND field included and set to '1'

with an indication from Layer 2 that an access attempt for a message being transmitted was not terminated as a result of processing the Layer 2 fields of the received message, the mobile station shall ignore the received message.

The following directed messages and orders can be received. If any field value of the message or order is outside its permissible range, the mobile station may send a *Mobile Station Reject Order* with ORDQ equal to '00000100' (message field not in valid range).

1. *Authentication Challenge Message:* The mobile station shall respond to the message as specified in 2.3.12.1.4, regardless of the value of $AUTH_S$.
2. *Authentication Request Message:* The mobile station shall process the message and shall respond as specified in 2.3.12.5.2.
3. *Base Station Challenge Confirmation Order:* The mobile station shall respond to the message as specified in 2.3.12.1.5.
4. *Base Station Reject Order:* The mobile station shall perform the procedures as specified in 2.6.11.5.
5. *Data Burst Message*

6. *Local Control Order*

7. *Lock Until Power-Cycled Order:* The mobile station shall disable its transmitter and record the reason for the *Lock Until Power-Cycled Order* in the mobile station's semi-permanent memory ($LCKRSN\_P_{s-p}$ equals the least significant four bits of $ORDQ_r$). The mobile station should notify the user of the locked condition. The mobile station shall enter the *System Determination Substate* of the *Mobile Station Initialization State* with a lock indication (see 2.6.1.1), and shall not enter the *System Access State* again until after the next mobile station power-up or until it has received an *Unlock Order*. This requirement shall take precedence over any other mobile station requirement specifying entry to the *System Access State*.

8. *Maintenance Required Order:* The mobile station shall record the reason for the *Maintenance Required Order* in the mobile station's semi-permanent memory ($MAINTRSN_{s-p}$ equals the least significant four bits of $ORDQ_r$). The mobile station shall remain in the unlocked condition. The mobile station should notify the user of the maintenance required condition.

9. *PACA Message:* The mobile station shall send a *Mobile Station Reject Order* with the ORDQ field set to '00000010' (message not accepted in this state).

10. *Registration Accepted Order:* The mobile station shall perform the procedures as specified in 2.6.11.1.

11. *Registration Rejected Order:* This order indicates that normal service is not available on this system. The mobile station shall disable the full-TMSI timer. If the received order specifies to delete the TMSI (ORDQ = '00000100'), the mobile station shall set all the bits of the $TMSI\_CODE_{s-p}$ to '1'. The mobile station shall enter the *System Determination Substate* of the *Mobile Station Initialization State* with a registration rejected indication (see 2.6.1.1).

12. *Retry Order:* The mobile station shall process the message as follows:
    - If $RETRY\_TYPE_r$ is equal to '000', the mobile station shall set $RETRY\_DELAY_s$[RETRY_TYPE] to 0, where RETRY_TYPE is equal to '001', '010', '011', '100', or '101'.
    - If $RETRY\_TYPE_r$ is equal to '001', '100', or '101', the mobile station shall perform the following:
      - If $RETRY\_DELAY_r$ is equal to '00000000', then the mobile station shall set $RETRY\_DELAY_s[RETRY\_TYPE_r]$ to 0.
      - If $RETRY\_DELAY_r$ is not equal to '00000000', the mobile station shall set $RETRY\_DELAY_s[RETRY\_TYPE_r]$ as follows:
        + If the most significant bit of the $RETRY\_DELAY_r$ is '0', set $RETRY\_DELAY\_UNIT_s$ to 1000ms. If the most significant bit of the $RETRY\_DELAY_r$ is '1', set $RETRY\_DELAY\_UNIT_s$ to 60000ms.
        + The mobile station shall set $RETRY\_DELAY\_VALUE_s$ to the seven least significant bits of $RETRY\_DELAY_r$.

+ The mobile station shall store the next system time 80 ms boundary + $RETRY\_DELAY\_VALUE_s \times RETRY\_DELAY\_UNIT_s$ ms as $RETRY\_DELAY_s[RETRY\_TYPE_r]$.

13. *Security Mode Command Message:* The mobile station shall perform the procedures as specified in 2.6.11.4.

14. *Service Redirection Message:* The mobile station shall process the message as follows:

    - If the mobile station is directed to an unsupported operation mode or band class, the mobile station shall respond with a *Mobile Station Reject Order* with ORDQ equal to '00000110' (message requires a capability that is not supported by the mobile station).
    - If $DELETE\_TMSI_r$ is equal to '1', the mobile station shall set all the bits of $TMSI\_CODE_{s\text{-}p}$ to '1'. The mobile station shall disable the full-TMSI timer.
    - The mobile station shall set $RETURN\_IF\_FAIL_s = RETURN\_IF\_FAIL_r$.
    - If $RECORD\_TYPE_r$ is equal to '00000000', the mobile station shall enter the *System Determination Substate* of the *Mobile Station Initialization State* with an NDSS off indication (see 2.6.1.1); otherwise, the mobile station shall store the redirection record received in the message as $REDIRECT\_REC_s$ and shall enter the *System Determination Substate* of the *Mobile Station Initialization State* with a redirection indication (see 2.6.1.1).

15. *SSD Update Message:* The mobile station shall respond to the message as specified in 2.3.12.1.5.

16. *Status Request Message:* The mobile station shall disable the *System Access State* timer and respond to the message. If $P\_REV\_IN\_USE_s$ is less than or equal to three, the mobile station shall respond with a *Status Response Message*. If $P\_REV\_IN\_USE_s$ is greater than three, the mobile station shall respond with an *Extended Status Response Message*. If the message does not specify any qualification information ($QUAL\_INFO\_TYPE_r$ is equal to '00000000'), the mobile station shall include the requested information records in the response. If the message specifies a band class ($QUAL\_INFO\_TYPE_r$ is equal to '00000001'), the mobile station shall only include the requested information records for the specified band class ($BAND\_CLASS_r$) in the response. If the message specifies a band class and an operating mode ($QUAL\_INFO\_TYPE_r$ is equal to '00000010'), the mobile station shall only include the requested information records for the specified band class ($BAND\_CLASS_r$) and operating mode (OP_MODE_r) in the *Status Response Message*.

    If the message specifies a band class or a band class and an operating mode which is not supported by the mobile station, the mobile station shall send a *Mobile Station Reject Order* with ORDQ set to '00000110' (message requires a capability that is not supported by the mobile station). If the response to this message exceeds the allowable length, the mobile station shall send a *Mobile Station Reject Order* with ORDQ set to '00001000' (response message would exceed the allowable

length). If the message specifies an information record which is not supported by the mobile station for the specified band class and operating mode, the mobile station shall send a *Mobile Station Reject Order* with ORDQ set to '00001001' (information record is not supported for the specified band class and operating mode).

17. *TMSI Assignment Message:* The mobile station shall store the TMSI zone and code as follows:

    - The mobile station shall store the length of the TMSI zone field by setting $ASSIGNING\_TMSI\_ZONE\_LEN_{s\text{-}p}$ to $TMSI\_ZONE\_LEN_r$,
    - The mobile station shall store the assigning TMSI zone number by setting the $ASSIGNING\_TMSI\_ZONE\_LEN_{s\text{-}p}$ least significant octets of $ASSIGNING\_TMSI\_ZONE_{s\text{-}p}$ to $TMSI\_ZONE_r$, and
    - The mobile station shall store the TMSI code by setting $TMSI\_CODE_{s\text{-}p}$ to $TMSI\_CODE_r$.

    The mobile station shall set the TMSI expiration time by setting $TMSI\_EXP\_TIME_{s\text{-}p}$ to $TMSI\_EXP\_TIME_r$. The mobile station shall disable the full-TMSI timer. The mobile station shall then respond with a *TMSI Assignment Completion Message* within T_{56m} seconds.

18. *General Page Message* or *Universal Page Message*: If the mobile station receives a mobile-station-addressed page, the mobile station may determine whether there is a page match (see 2.6.2.3). If a match is declared, the mobile station shall perform the following:

    - Layer 3 shall send an L2-Supervision.Request primitive to Layer 2 to abort any access attempt in progress.
    - The mobile station shall enter the *Page Response Substate*.

19. *Extended Channel Assignment Message:* If the $DIRECT\_CH\_ASSIGN\_IND_r$ is included and is set to '1', the mobile station shall perform the following:

    - Layer 3 shall send an L2-Supervision.Request primitive to Layer 2 to abort any access attempt in progress.
    - The mobile station shall process the message as specified in section 2.6.3.3.

    Otherwise, the mobile station shall ignore this message.

20. *Fast Call Setup Order*:

    - If $ORDQ_r$ is equal to '00000000', the mobile station shall process the message and respond with a *Fast Call Setup Order* as specified in 2.6.12.1.
    - If $ORDQ_r$ is equal to '00000001', the mobile station shall process the message as specified in 2.6.12.1.

21. General Extension Message: The mobile station shall process this message as specified in section 2.6.18.

22. *Any other message:* If the mobile station receives any other message specified in Table 3.7.2.3-1, it shall ignore all Layer 3 fields. The mobile station shall ignore all other messages.

2.6.4 Mobile Station Control on the Traffic Channel State

In this state, the mobile station communicates with the base station using the Forward and Reverse Traffic Channels.

As illustrated in Figure 2.6.4-1, the *Mobile Station Control on the Traffic Channel State* consists of the following substates:

- *Traffic Channel Initialization Substate* - In this substate, the mobile station verifies that it can receive the Forward Traffic Channel and begins transmitting on the Reverse Traffic Channel.
- *Traffic Channel Substate* - In this substate, the mobile station exchanges Traffic Channel frames with the base station in accordance with the current service configuration. The mobile station may perform the gating operation of Reverse Pilot Channel. While in this substate, one or more Call Control instances can be activated (see 2.6.10).
- *Release Substate* - In this substate, the mobile station disconnects the calls and the physical channels.

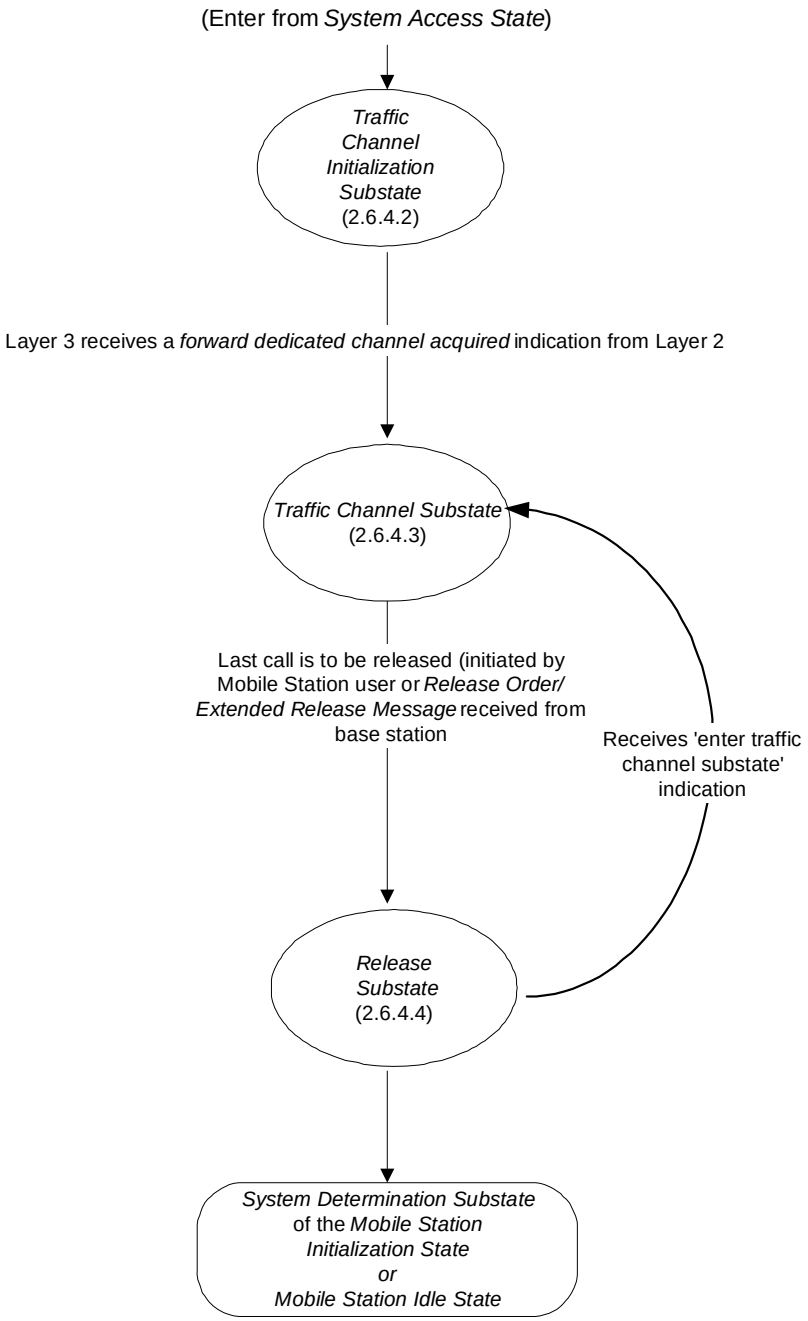

Figure 2.6.4-1. Mobile Station Control on the Traffic Channel State

2.6.4.1 Special Functions and Actions

The mobile station performs special functions and actions in one or more of the substates of the *Mobile Station Control on the Traffic Channel State*.

2.6.4.1.1 Forward Traffic Channel Power Control

The mobile station uses $FPC\_MODE\_NO\_SCH_S$ as FPC_MODE_S except during the forward Supplemental Channel assignment interval. During the forward Supplemental Channel assignment interval, the mobile station uses $FPC\_MODE\_SCH_S$ as FPC_MODE_S.

To support Forward Traffic Channel power control, the mobile station reports frame error rate statistics to the base station. If the base station enables periodic reporting, the mobile station reports frame error rate statistics at specified intervals. If the base station enables threshold reporting, the mobile station reports frame error rate statistics when the frame error rate reaches a specified threshold.[28]

The mobile station shall maintain the following frame counters:

- A counter (TOT_FRAMES_S) for the total number of frames received on the Forward Fundamental Channel.
- A counter (BAD_FRAMES_S) for the number of bad frames detected on the Forward Fundamental Channel.
- A counter ($DCCH\_TOT\_FRAMES_S$) for the total number of frames received on the Forward Dedicated Control Channel, when the Dedicated Control Channel is assigned.
- A counter ($DCCH\_BAD\_FRAMES_S$) for the total number of bad frames received on the Forward Dedicated Control Channel, when the Dedicated Control Channel is assigned.

The mobile station shall maintain the following counters for each Supplemental Channel assigned, if $FOR\_SCH\_FER\_REP_S$ is equal to '1':

- A counter ($SCH\_TOT\_FRAMES_S$) for the number of frames received on the assigned Supplemental Channel.
- A counter ($SCH\_BAD\_FRAMES_S$) for the number of bad frames received on the assigned Supplemental Channel.

The mobile station shall increment the counter by 1 at every 20 ms interval if a 20ms frame or at least one 5ms frame is received from the Forward Fundamental Channel or Dedicated Control Channel:

[28] Periodic reporting and threshold reporting may be independently enabled or disabled by the base station.

- If the received frame is from the Fundamental Channel, the mobile station shall perform the following:
  - Increment TOT_FRAMES_S by 1.
  - If the received 20ms frame is bad or one of the 5ms frames is bad, the mobile station shall increment BAD_FRAMES_S by 1.
- If the received frame is from the Forward Dedicated Control Channel, the mobile station shall perform the following:
  - Increment $DCCH\_TOT\_FRAMES_S$ by 1.
  - If the received 20ms frame is bad or one of the 5ms frames is bad, the mobile station shall increment $DCCH\_BAD\_FRAMES_S$ by 1.
- If either of the following conditions is true:
  - $PWR\_THRESH\_ENABLE_S$ is equal to '1' and if one of the following conditions is true:
    - If the mobile station is to perform the primary inner loop estimation on the received Forward Fundamental Channel [$FPC\_PRI\_CHAN_S$ = '0'], and BAD_FRAMES_S is equal to $PWR\_REP\_THRESH_S$ or
    - If the mobile station is to perform the primary inner loop estimation on the received Forward Dedicated Control Channel [$FPC\_PRI\_CHAN_S$ = '1'], and $DCCH\_BAD\_FRAMES_S$ is equal to $PWR\_REP\_THRESH_S$.

  or
  - $PWR\_PERIOD\_ENABLE_S$ is equal to '1' and if one of the following conditions is true:
    - If the mobile station is to perform the primary inner loop estimation on the received Forward Fundamental Channel [$FPC\_PRI\_CHAN_S$ = '0'], and TOT_FRAMES_S is equal to $\lfloor (2^{(PWR\_REP\_FRAMES_S/2)} \times 5) \rfloor$, or
    - If the mobile station is to perform the primary inner loop estimation on the received Forward Dedicated Control Channel [$FPC\_PRI\_CHAN_S$ = '1'], and $DCCH\_TOT\_FRAMES_S$ is equal to $\lfloor (2^{(PWR\_REP\_FRAMES_S/2)} \times 5) \rfloor$,

  then the mobile station shall send a *Power Measurement Report Message* to the base station. The mobile station should send the *Power Measurement Report Message* in unassured mode. After sending a *Power Measurement Report Message*, the mobile station shall set TOT_FRAMES_S, BAD_FRAMES_S to zero, and if the Dedicated Control Channel is assigned, shall set $DCCH\_TOT\_FRAMES_S$ and $DCCH\_BAD\_FRAMES_S$ to zero. The mobile station shall not increment the counters for a period of $PWR\_REP\_DELAY_S \times 4$ frames following the first transmission of the message.
- If $FPC\_PRI\_CHAN_S$ is equal to '0' and TOT_FRAMES_S is equal to $\lfloor (2^{(PWR\_REP\_FRAMES_S/2)} \times 5) \rfloor$, the mobile station shall perform the following:
  - Set TOT_FRAMES_S and BAD_FRAMES_S to zero.

- Set $DCCH\_TOT\_FRAMES_S$ and $DCCH\_BAD\_FRAMES_S$ to zero, if the Dedicated Control Channel is assigned.

- If $FPC\_PRI\_CHAN_S$ is equal to '1' and $DCCH\_TOT\_FRAMES_S$ is equal to $\lfloor (2^{(PWR\_REP\_FRAMES_S/2)} \times 5) \rfloor$, the mobile station shall set TOT_FRAMES_S, BAD_FRAMES_S, $DCCH\_TOT\_FRAMES_S$, and $DCCH\_BAD\_FRAMES_S$ to zero.

For each received frame from an assigned Supplemental Channel, the mobile station shall perform the following, if $FOR\_SCH\_FER\_REP_S$ is equal to '1':

- Increment $SCH\_TOT\_FRAMES_S$ by 1.
- If the received frame is bad, increment $SCH\_BAD\_FRAMES_S$ by 1.

At the end of a burst on each assigned Supplemental Channel, if $FOR\_SCH\_FER\_REP_S$ is equal to '1', the mobile station shall report the total number of frames received on this Supplemental Channel ($SCH\_TOT\_FRAMES_S$) and the bad frames detected ($SCH\_BAD\_FRAMES_S$) with the fields SCH_PWR_MEAS_FRAMES and SCH_ERRORS_DETECTED in the *Power Measurement Report Message* respectively. After sending the *Power Measurement Report Message* for the Supplemental Channel, the mobile station shall set $SCH\_TOTAL\_FRAMES_S$ and $SCH\_BAD\_FRAMES_S$ of the reported SCH to zero.

If both Forward Fundamental Channel and the Forward Dedicated Control Channel are assigned to the mobile station, the mobile station shall perform the following:

- The mobile station shall set $FPC\_DELTA\_SETPT_S$ to ($FPC\_FCH\_CURR\_SETPT_S$ – $FPC\_DCCH\_CURR\_SETPT_S$).
- For each received frame, if $|FPC\_FCH\_CURR\_SETPT_S - FPC\_DCCH\_CURR\_SETPT_S - FPC\_DELTA\_SETPT_S|$ is equal to or greater than its assigned threshold $FPC\_SETPT\_THRESH_S$, the mobile station shall send the *Outer Loop Report Message* requiring acknowledgment to the base station, and the mobile station shall then set $FPC\_DELTA\_SETPT_S$ to ($FPC\_FCH\_CURR\_SETPT_S$ – $FPC\_DCCH\_CURR\_SETPT_S$).

For each of the supplemental channels assigned to the mobile station and FPC_MODE_S is set to '000', the mobile station shall perform the following:

- The mobile station shall set $FPC\_DELTA\_SCH\_SETPT_S$ to ($FPC\_FCH\_CURR\_SETPT_S$ – $FPC\_SCH\_CURR\_SETPT_S$) if $FPC\_PRI\_CHAN_S$ is equal to '0'.
- The mobile station shall set $FPC\_DELTA\_SCH\_SETPT_S$ to ($FPC\_DCCH\_CURR\_SETPT_S$ – $FPC\_SCH\_CURR\_SETPT_S$) if $FPC\_PRI\_CHAN_S$ is equal to '1'.

- For each received frame, if $FPC\_PRI\_CHAN_S$ is equal to '0' and $|FPC\_FCH\_CURR\_SETPT_S - FPC\_SCH\_CURR\_SETPT_S - FPC\_DELTA\_SCH\_SETPT_S|$ is equal to or greater than its assigned threshold $FPC\_SETPT\_THRESH\_SCH_S$, the mobile station shall send the *Outer Loop Report Message* in assured mode, and the mobile station shall then set $FPC\_DELTA\_SCH\_SETPT_S$ to ($FPC\_FCH\_CURR\_SETPT_S - FPC\_SCH\_CURR\_SETPT_S$).
- For each received frame, if $FPC\_PRI\_CHAN_S$ is equal to '1' and $|FPC\_DCCH\_CURR\_SETPT_S - FPC\_SCH\_CURR\_SETPT_S - FPC\_DELTA\_SCH\_SETPT_S|$ is equal to or greater than its assigned threshold $FPC\_SETPT\_THRESH\_SCH_S$, the mobile station shall send the *Outer Loop Report Message* in assured mode, and the mobile station shall then set $FPC\_DELTA\_SCH\_SETPT_S$ to ($FPC\_DCCH\_CURR\_SETPT_S - FPC\_SCH\_CURR\_SETPT_S$).

If the Supplemental channels are assigned to the mobile station and FPC_MODE_S is set to '001', '010', '101', or '110', for each additional Forward Supplemental Channel other than the Forward Supplemental Channel specified by $FPC\_SEC\_CHAN_S$, the mobile station shall perform the following:

- The mobile station shall set $FPC\_DELTA\_SCH\_SETPT_S$ to ($FPC\_SCH\_CURR\_SETPT_S[FPC\_SEC\_CHAN_S] - FPC\_SCH\_CURR\_SETPT_S$) for the Supplemental Channel.
- For each received frame, if $|FPC\_SCH\_CURR\_SETPT_S[FPC\_SEC\_CHAN_S] - FPC\_SCH\_CURR\_SETPT_S - FPC\_DELTA\_SCH\_SETPT_S|$ is equal to or greater than its assigned threshold $FPC\_SETPT\_THRESH\_SCH_S$, the mobile station shall send the *Outer Loop Report Message* in assured mode, and the mobile station shall then set $FPC\_DELTA\_SCH\_SETPT_S$ to ($FPC\_SCH\_CURR\_SETPT_S[FPC\_SEC\_CHAN_S] - FPC\_SCH\_CURR\_SETPT_S$).

2.6.4.1.1.1 Forward Traffic Channel Power Control Initialization

To initialize Forward Traffic Channel power control, the mobile station shall set TOT_FRAMES_S, BAD_FRAMES_S, $DCCH\_TOT\_FRAMES_S$, and $DCCH\_BAD\_FRAMES_S$ to zero. The mobile station shall initialize the frame counters $SCH\_TOT\_FRAMES_S$ and $SCH\_BAD\_FRAMES_S$ for each assigned Supplemental Channel to zero. The mobile station shall initialize $FOR\_SCH\_FER\_REP_S$ to zero.

2.6.4.1.1.2 Processing the Power Control Parameters Message

The mobile station shall store the following parameters from the *Power Control Parameters Message:*

- Power control reporting threshold ($PWR\_REP\_THRESH_S = PWR\_REP\_THRESH_r$)
- Power control reporting frame count ($PWR\_REP\_FRAMES_S = PWR\_REP\_FRAMES_r$)
- Threshold report mode indicator ($PWR\_THRESH\_ENABLE_S = PWR\_THRESH\_ENABLE_r$)

- Periodic report mode indicator ($PWR\_PERIOD\_ENABLE_s = PWR\_PERIOD\_ENABLE_r$)
- Power report delay ($PWR\_REP\_DELAY_s = PWR\_REP\_DELAY_r$)

The mobile station shall set TOT_FRAMES_s and BAD_FRAMES_s to zero if FCH is assigned. The mobile station shall set $DCCH\_TOT\_FRAMES_s$ and $DCCH\_BAD\_FRAMES_s$ to zero if DCCH is assigned.

2.6.4.1.1.3 Processing the Power Control Message

The mobile station shall send a *Mobile Station Reject Order* with the ORDQ field set to '00000110' (message requires a capability that is not supported by the mobile station) if any of the following conditions are detected:

- If the mobile station does not support any Radio Configuration greater than 2 and FPC_MODE_r is not supported by the mobile station.
- If the mobile station does not support Supplemental Channel and FPC_MODE_r is set to the '001', '010', '101', or '110'.
- If $PWR\_CNTL\_STEP_r$ corresponds to a power control step size (see [2]) is not supported by the mobile station.

The mobile station shall send a *Mobile Station Reject Order* with the ORDQ field set to '00000111' (message cannot be handled by the current mobile station configuration) if any of the following conditions are detected:

- $FPC\_PRI\_CHAN_r$ is set to '1' and only the Fundamental Channel is assigned.
- $FPC\_PRI\_CHAN_r$ is set to '0' and only the Dedicated Control Channel is assigned.

If none of the above conditions are true, the mobile station shall process the message as follows at the action time (see 2.6.4.1.5) specified in the message:

- The mobile station shall store the power control step size ($PWR\_CNTL\_STEP_s = PWR\_CNTL\_STEP_r$).
- If FPC_INCL_r is equal to '1', the mobile station shall perform the following:
  - The mobile station shall set $FPC\_MODE\_NO\_SCH_s = FPC\_MODE_r$.
  - The mobile station shall set $FPC\_MODE_s = FPC\_MODE\_NO\_SCH_s$ if there is no forward Supplemental Channel burst in progress (see 2.6.6.2.5.1.1).
  - The mobile station shall set $FPC\_PRI\_CHAN_s$ to $FPC\_PRI\_CHAN_r$
  - If FPC_OLPC_FCH_INCL is equal to '1', the mobile station shall:
    - Set $FPC\_FCH\_FER_s$ to $FPC\_FCH\_FER_r$.
    - If $FPC\_FCH\_MIN\_SETPT_r$ is not equal to '11111111', set $FPC\_FCH\_MIN\_SETPT_s$ to $FPC\_FCH\_MIN\_SETPT_r$; otherwise, set $FPC\_FCH\_MIN\_SETPT_s$ to $FPC\_FCH\_CURR\_SETPT_s$.

+ If $FPC\_FCH\_MAX\_SETPT_r$ is not equal to '11111111', set $FPC\_FCH\_MAX\_SETPT_s$ to $FPC\_FCH\_MAX\_SETPT_r$; otherwise, set $FPC\_FCH\_MAX\_SETPT_s$ to $FPC\_FCH\_CURR\_SETPT_s$.

– If FPC_OLPC_DCCH_INCL is equal to '1', the mobile station shall:

+ Set $FPC\_DCCH\_FER_s$ to $FPC\_DCCH\_FER_r$.

+ If $FPC\_DCCH\_MIN\_SETPT_r$ is not equal to '11111111', set $FPC\_DCCH\_MIN\_SETPT_s$ to $FPC\_DCCH\_MIN\_SETPT_r$; otherwise, set $FPC\_DCCH\_MIN\_SETPT_s$ to $FPC\_DCCH\_CURR\_SETPT_s$.

+ If $FPC\_DCCH\_MAX\_SETPT_r$ is not equal to '11111111', set $FPC\_DCCH\_MAX\_SETPT_s$ to $FPC\_DCCH\_MAX\_SETPT_r$; otherwise, set $FPC\_DCCH\_MAX\_SETPT_s$ to $FPC\_DCCH\_CURR\_SETPT_s$.

– If FPC_INCL is equal to '1' and FPC_MODE is equal to '001', '010', '101', or '110', the mobile station shall:

+ Set $FPC\_SEC\_CHAN_s$ to $FPC\_SEC\_CHAN_r$.

+ Set $FPC\_BCMC\_CHAN_s$ to $FPC\_BCMC\_CHAN_r$.

– If NUM_SUP_r is not equal to '00', for each Supplemental Channel included in the message, the mobile station shall:

+ Set SCH_ID_s to SCH_ID_r.

+ Set $FPC\_SCH\_FER_s[SCH\_ID_s]$ to $FPC\_SCH\_FER_r$.

+ If $FPC\_SCH\_MIN\_SETPT_r$ is not equal to '11111111', set $FPC\_SCH\_MIN\_SETPT_s[SCH\_ID_s]$ to $FPC\_SCH\_MIN\_SETPT_r$; otherwise, set $FPC\_SCH\_MIN\_SETPT_s[SCH\_ID_s]$ to $FPC\_SCH\_CURR\_SETPT_s$.

+ If $FPC\_SCH\_MAX\_SETPT_r$ is not equal to '11111111', set $FPC\_SCH\_MAX\_SETPT_s[SCH\_ID_s]$ to $FPC\_SCH\_MAX\_SETPT_r$; otherwise, set $FPC\_SCH\_MAX\_SETPT_s[SCH\_ID_s]$ to $FPC\_SCH\_CURR\_SETPT_s$.

– If FPC_THRESH_INCL is equal to '1', the mobile station shall set $FPC\_SETPT\_THRESH_s$ to $FPC\_SETPT\_THRESH_r$.

– If FPC_THRESH_SCH_INCL is equal to '1', the mobile station shall set $FPC\_SETPT\_THRESH\_SCH_s$ to $FPC\_SETPT\_THRESH\_SCH_r$

• If RPC_INCL_r is equal to '1' and the mobile station supports any Radio Configuration greater than 2, the mobile station shall perform the following:

– If RPC_ADJ_REC_TYPE is equal to '0000', the mobile station shall update the Reverse Channel Adjustment Gain Table (see [2]) containing an offset relative to the Reverse Pilot Channel power for each reverse link code channel received in this message.

– If RPC_ADJ_REC_TYPE is equal to '0001' or '0010', the mobile station shall update the Reverse Link Attribute Adjustment Gain Table (see [2]) containing an offset relative to the Reverse Pilot Channel power for each transmission rate, frame length, coding type received in this message.

- If RPC_ADJ_REC_TYPE is equal to ‘0011’, at the action time of the message, the mobile station shall update the Reverse Link Attribute Adjustment Gain Table (see [2]) containing an offset relative to the Reverse Pilot Channel power for the R-CQICH.
- If RPC_ADJ_REC_TYPE is equal to ‘0100’, the mobile station shall perform the following:
  - At the first R-PDCH frame boundary at or after the action time of the message, the mobile station shall update the Reverse Link Attribute Adjustment Gain Table (see [2]) containing an offset relative to the Reverse Pilot Channel power for any combination of the following channels:
    - R-REQCH,
    - R-SPICH,
    - R-PDCCH possibly for each encoder packet size, or for the boosted and non boosted modes
    - R-PDCH possibly for each encoder packet size, or for the boosted and non boosted modes, or for each encoder packet size and transmission round.
  - At the action time of the message, the mobile station shall update the Reverse Link Attribute Adjustment Gain Table (see [2]) containing an offset relative to the Reverse Pilot Channel power for the R-ACKCH.
  - If $REV\_SPICH\_ADJ\_INCL_r$ is equal to ‘1’, the mobile station shall set $REV\_SPICH\_EP\_SIZE_s$ to $REV\_SPICH\_EP\_SIZE_r+1$.
  - If $REV\_PDCH\_PARMS\_INCL_r$ is equal to ‘1’, the mobile station shall set $REV\_PDCH\_NUM\_ARQ\_ROUNDS\_NORMAL_s$ to $REV\_PDCH\_NUM\_ARQ\_ROUNDS\_NORMAL_r+1$, and $REV\_PDCH\_NUM\_ARQ\_ROUNDS\_BOOST_s$ to $REV\_PDCH\_NUM\_ARQ\_ROUNDS\_BOOST_r+1$.

2.6.4.1.1.4 Processing the Rate Change Message

The mobile station shall process this message as follows at the action time (see 2.6.4.1.5) specified in the message:

- The mobile station shall set $FULL\_CI\_FEEDBACK\_IND_s$ to $FULL\_CI\_FEEDBACK\_IND_r$.
- If $REV\_CQICH\_RATE\_CHANGE\_INCL_r$ is equal to ‘1’, the mobile station shall set $REV\_CQICH\_REPS_s$ to $REV\_CQICH\_REPS_r$. In addition, if $RL\_CQICH\_ATT\_ADJ\_GAIN\_INCL_r$ is equal to ‘1’, the mobile station shall update the Reverse Link Attribute Adjustment Gain Table (see [2]) containing the offsets relative to the Reverse Pilot Channel power for the corresponding transmission power level (HIGH or LOW).

- If $SWITCHING\_PARMS\_INCL_r$ is included and equal to '1', the mobile station shall set $NUM\_SOFT\_SWITCHING\_FRAMES_s$ to $NUM\_SOFT\_SWITCHING\_FRAMES_r + 1$, and, $NUM\_SOFTER\_SWITCHING\_FRAMES_s$ to $NUM\_SOFTER\_SWITCHING\_FRAMES_r + 1$.
- If CHM_SWITCHING_PARMS_INCL is included and equal to '1', the mobile station shall set $NUM\_SOFT\_SWITCHING\_FRAMES\_CHM_s$ to $NUM\_SOFT\_SWITCHING\_FRAMES\_CHM_r + 1$, and $NUM\_SOFTER\_SWITCHING\_FRAMES\_CHM_s$ to $NUM\_SOFTER\_SWITCHING\_FRAMES\_CHM_r + 1$.
- If CHM_SWITCHING_PARMS_INCL is included and equal to '0', the mobile station shall set $NUM\_SOFT\_SWITCHING\_FRAMES\_CHM_s$ to $NUM\_SOFT\_SWITCHING\_FRAMES_r + 1$, and $NUM\_SOFTER\_SWITCHING\_FRAMES\_CHM_s$ to $NUM\_SOFTER\_SWITCHING\_FRAMES_r + 1$.
- If $REV\_ACKCH\_RATE\_CHANGE\_INCL_r$ is equal to '1', the mobile station shall set $REV\_ACKCH\_REPS_s$ to $REV\_ACKCH\_REPS_r$.
- If $REV\_PDCH\_MAX\_PARMS\_INCL_r$ is equal to '1', the base station shall set $REV\_PDCH\_MAX\_AUTO\_TPR_s$ to $REV\_PDCH\_MAX\_AUTO\_TPR_r$, and $REV\_PDCH\_MAX\_SIZE\_ALLOWED\_ENCODER\_PACKET_s$ to $REV\_PDCH\_MAX\_SIZE\_ALLOWED\_ENCODER\_PACKET_r+1$.
- If $REV\_PDCH\_PARMS\_INCL_r$ is equal to '1', the mobile station shall set $REV\_PDCH\_NUM\_ARQ\_ROUNDS\_NORMAL_s$ to $REV\_PDCH\_NUM\_ARQ\_ROUNDS\_NORMAL_r+1$, and $REV\_PDCH\_NUM\_ARQ\_ROUNDS\_BOOST_s$ to $REV\_PDCH\_NUM\_ARQ\_ROUNDS\_BOOST_r+1$.

2.6.4.1.2 Service Configuration and Negotiation

During Traffic Channel operation, the mobile station and base station communicate through the exchange of Forward and Reverse Traffic Channel frames. The mobile station and base station use a common set of attributes for building and interpreting Traffic Channel frames. This set of attributes, referred to as a service configuration, consists of both negotiable and non-negotiable parameters.

The set of negotiable service configuration parameters consists of the following:

1. *Forward and Reverse Multiplex Options:* These control the way in which the information bits of the Forward and Reverse Traffic Channel frames, respectively, are divided into various types of traffic, such as signaling traffic, primary traffic and secondary traffic. A multiplex option together with a radio configuration specifies the frame structures and transmission rates (see [3]). The multiplex options which support Supplemental Code Channel transmission and Supplemental Channel transmission on the Forward and Reverse Traffic Channels are included in [3]. Multiplex Options 3 through 16 also indicate the capability for supporting Supplemental Code Channel transmission on the Forward and Reverse Traffic Channels. Invocation of Supplemental Code Channel operation on the Forward or Reverse Traffic Channels occurs by the *Supplemental Channel Request Message*, the *Supplemental Channel Assignment Message*, and the *General Handoff Direction Message*. Invocation of Supplemental Channel operation on the Forward or Reverse Traffic Channels occurs by the *Supplemental Channel Request Mini Message*, the *Extended Supplemental Channel Assignment Message*, the *Forward Supplemental Channel Assignment Mini Message*, *Universal Handoff Direction Message*, and the *Reverse Supplemental Channel Assignment Mini Message*. The multiplex option used for the Forward Traffic Channel can be the same as that used for the Reverse Traffic Channel, or it can be different.

2. *Forward and Reverse Traffic Channel Configurations:* These include the Radio Configurations and other necessary attributes for the Forward and Reverse Traffic Channels. The Traffic Channel Configuration used can be different for the Forward and Reverse Traffic Channels or it can be the same.

3. *Forward and Reverse Traffic Channel Transmission Rates*: These are the transmission rates actually used for the Forward and Reverse Traffic Channels respectively. The transmission rates for the Forward Traffic Channel can include all of the transmission rates supported by the radio configuration associated with the Forward Traffic Channel multiplex option, or a subset of the supported rates. Similarly, the transmission rates used for the Reverse Traffic Channel can include all rates supported by the radio configuration associated with the Reverse Traffic Channel multiplex option, or a subset of the supported rates. The transmission rates used for the Forward Traffic Channel can be the same as those used for the Reverse Traffic Channel, or they can be different.

4. *Service Option Connections:* These are the services in use on the Traffic Channel. There can be multiple service option connections. It is also possible that there is no service option connection, in which case the mobile station uses the Reverse

Traffic Channel as follows:

- Sends null traffic on the Reverse Fundamental Channel, if the Fundamental Channel is present.
- Sends signaling traffic on the Reverse Traffic Channel where r-dsch is mapped to.

Associated with each service option connection are a service option, a Forward Traffic Channel traffic type, a Reverse Traffic Channel traffic type, and a service option connection reference. The associated service option formally defines the way in which traffic bits are processed by the mobile station and base station. The associated Forward and Reverse Traffic Channel traffic types specify the types of traffic used to support the service option. A service option can require the use of a particular type of traffic, such as primary or secondary, or it can accept more than one traffic type. A service option can be one-way, in which case it can be supported on the Forward Traffic Channel only or the Reverse Traffic Channel only. Alternatively, a service option can be two-way, in which case it can be supported on the Forward and Reverse Traffic Channels simultaneously. Connected service options can also invoke operation on Supplemental Code Channels in either one or both of the Forward and Reverse Traffic Channels by negotiating a multiplex option that supports operation on Supplemental Code Channels (see [3] for Multiplex options applicable to Supplemental Code Channels), and by using the appropriate Supplemental Code Channel related messages (i.e., the *Supplemental Channel Request Message*, the *Supplemental Channel Assignment Message*, and the *General Handoff Direction Message*). After Supplemental Code Channels have been assigned by the base station, the connected service option can transmit primary and/or secondary traffic on Supplemental Code Channels. Connected service options can also invoke operation on Supplemental Channels in either one or both of the Forward and Reverse Traffic Channels by negotiating a multiplex option that supports operation on Supplemental Channels (see [3] for Multiplex Options applicable to Supplemental Channel) and by using the appropriate Supplemental Channel related messages (i.e., the *Supplemental Channel Request Mini Message*, the *Extended Supplemental Channel Assignment Message*, the *Forward Supplemental Channel Assignment Mini Message*, the *Reverse Supplemental Channel Assignment Mini Message*, and the *Universal Handoff Direction Message*). After Supplemental Channels have been assigned by the base station, the connected service option can transmit primary and/or secondary traffic on Supplemental Channels. The associated service option connection reference provides a means for uniquely identifying the service option connection. The reference serves to resolve ambiguity when there are multiple service option connections in use.

The non-negotiable service configuration parameters are sent from the base station to the mobile stations only, and consists of the following:

1. *Reverse Pilot Gating Rate:* This controls the way in which the reverse pilot is gated on the Reverse Pilot Channel. The base station specifies the reverse pilot gating rate to be used in the *Service Connect Message*, the *General Handoff Direction*

Message, and the *Universal Handoff Direction Message*.

2. *Forward and Reverse Power Control Parameters:* These consist of forward power control operation mode, outer loop power control parameters (e.g. target frame error rate, minimum E_b/N_t setpoint, and maximum E_b/N_t setpoint) for the Forward Fundamental Channel and Forward Dedicated Control Channel, and Power Control Subchannel indicator which indicates where the mobile station is to perform the primary inner loop estimation and the base station is to multiplex the Power Control Subchannel.

3. *Logical to Physical Mapping:* This is a table of logical to physical mapping entries, consisting of service reference identifier, logical resource, physical resource, forward flag, reverse flag, and priority.

The mobile station can request a default service configuration associated with a service option at call origination, and can request new service configurations during Traffic Channel operation. A requested service configuration can differ greatly from its predecessor or can be very similar. For example, the mobile station can request a service configuration in which all of the service option connections are different from those of the existing configuration; or the mobile station can request a service configuration in which the existing service option connections are maintained with only minor changes, such as a different set of transmission rates or a different mapping of service option connections to Forward and Reverse Traffic Channel traffic types.

If the mobile station requests a service configuration that is acceptable to the base station, they both begin using the new service configuration. If the mobile station requests a service configuration that is not acceptable to the base station, the base station can reject the requested service configuration or propose an alternative service configuration. If the base station proposes an alternative service configuration, the mobile station can accept or reject the base station's proposed service configuration, or propose yet another service configuration. This process, called service negotiation, ends when the mobile station and the base station find a mutually acceptable service configuration, or when either the mobile station or the base station rejects a service configuration proposed by the other.

It is also possible for the base station to request a default service configuration associated with a service option when paging the mobile station and to request new service configurations during Traffic Channel operation. The service negotiation proceeds as described above, but with the roles of the mobile station and base station reversed.

For CDMA mode operation in Band Class 0, the mobile station and base station can also use an alternative method for negotiating a service configuration known as service option negotiation. Service option negotiation is similar to service negotiation, but offers less flexibility for specifying the attributes of the service configuration. During service option negotiation, the base station or the mobile station specifies only which service option is to be used. There is no facility for explicitly specifying the multiplex options, traffic types or transmission rates to be used on the Forward and Reverse Traffic Channels in conjunction with the service option. Instead, implicit service configuration attributes are assumed. In particular, the Forward and Reverse multiplex options and transmission rates are assumed to be the default multiplex options and transmission rates associated with the

requested service option, and the traffic type for both the Forward and Reverse Traffic Channels is assumed to be primary traffic; furthermore, a service configuration established using service option negotiation is restricted to having only a single service option connection.

At mobile station origination and termination, the type of negotiation to use, either service negotiation or service option negotiation, is indicated in the *Channel Assignment Message*. Service negotiation is always used after the mobile station receives an *Extended Channel Assignment Message*. If a CDMA-to-CDMA hard handoff occurs during the call, the type of negotiation to use following the handoff is indicated in the *Extended Handoff Direction Message*, the *General Handoff Direction Message, or the Universal Handoff Direction Message*.

For CDMA mode operation in band classes other than Band Class 0, only service negotiation is to be used.

The following messages are used to support service negotiation:

1. *Service Request Message:* The mobile station can use this message to propose a service configuration, or to accept or reject a service configuration proposed in a *Service Response Message*. The base station can use this message to propose a service configuration, or to reject a service configuration proposed in a *Service Response Message*.
2. *Service Response Message:* The mobile station can use this message to accept or reject a service configuration proposed in a *Service Request Message*, or to propose an alternative service configuration. The base station can use this message to reject a service configuration proposed in a *Service Request Message*, or to propose an alternative service configuration.
3. *Service Connect Message:* The base station can use this message to accept a service configuration proposed in a *Service Request Message* or *Service Response Message*, and to instruct the mobile station to begin using the service configuration.
4. *Service Connect Completion Message:* The mobile station can use this message to acknowledge the transition to a new service configuration.
5. *Service Option Control Message:* The mobile station and base station can use this message to invoke service-option-specific functions.
6. *Extended Channel Assignment Message:* The base station can use this message to accept or reject the initial service configuration proposed by the mobile station in an *Origination Message* or a *Page Response Message*.

The following messages are used to support service option negotiation:

1. *Service Option Request Order:* The mobile station and base station can use this message either to request a service option or to suggest an alternative service option.
2. *Service Option Response Order:* The mobile station and base station can use this message to accept or to reject a service option request.

3. *Service Option Control Order:* The mobile station and base station can use this message to invoke service option specific functions.

The following messages are used to support both service negotiation and service option negotiation:

1. *Origination Message:* The mobile station can use this message to propose an initial service configuration.

2. *Channel Assignment Message:* The base station can use this message to accept or to reject the initial service configuration proposed by the mobile station in an *Origination Message* or a *Page Response Message* and to indicate which type of negotiation, either service negotiation or service option negotiation, is to be used during the call.

3. *Extended Handoff Direction Message:* The base station can use this message to indicate which type of negotiation, either service negotiation or service option negotiation, is to be used following a CDMA-to-CDMA hard handoff.

4. *General Handoff Direction Message:* The base station can use this message to indicate which type of negotiation, either service negotiation or service option negotiation, is to be used following a CDMA-to-CDMA hard handoff. The base station can use this message to accept a service configuration proposed in a *Service Request Message* or *Service Response Message*. The base station can also use this message to instruct the mobile station to begin using the service configuration.

5. *General Page Message* or *Universal Page Message:* The base station can use a mobile-station-addressed page in a *General Page Message* or in a *Universal Page Message* to propose an initial service configuration.

6. *Page Response Message:* The mobile station can use this message to accept or to reject the initial service configuration proposed by the base station in a mobile-station-addressed page, or to propose an alternative initial service configuration.

7. *Status Request Message:* The base station can use this message to request service capability information from the mobile station.

8. *Status Response Message:* The mobile station can use this message to return the service capability information requested by the base station in a *Status Request Message*.

9. *Extended Status Response Message:* The mobile station can use this message to return the service capability information requested by the base station in a *Status Request Message*.

10. *Universal Handoff Direction Message:* The base station can use this message to indicate which type of negotiation, either service negotiation or service option negotiation, is to be used following a CDMA-to-CDMA hard handoff. The base station can use this message to accept a service configuration proposed in a *Service Request Message* or *Service Response Message*. The base station can also use this message to instruct the mobile station to begin using the service

configuration.

11. General Extension Message: The mobile station shall process this message as specified in section 2.6.18.

2.6.4.1.2.1 Use of Variables

2.6.4.1.2.1.1 Maintaining the Service Request Sequence Number

The mobile station shall maintain a service request sequence number variable, $SERV\_REQ\_NUM_S$ for use with service negotiation. Upon entering the *Mobile Station Control On the Traffic Channel State*, the mobile station shall set $SERV\_REQ\_NUM_S$ to 0. Each time the mobile station sends a new *Service Request Message*, it shall set the SERV_REQ_SEQ field of the message to the current value of $SERV\_REQ\_NUM_S$, and shall then set $SERV\_REQ\_NUM_S$ equal to ($SERV\_REQ\_NUM_S$ + 1) modulo 8.

2.6.4.1.2.1.2 Maintaining the Service Negotiation Indicator Variable

The mobile station shall maintain a service negotiation indicator variable, $SERV\_NEG_S$, to indicate which type of negotiation to use, either service negotiation or service option negotiation. The mobile station shall set $SERV\_NEG_S$ to enabled whenever service negotiation is to be used, and shall set $SERV\_NEG_S$ to disabled whenever service option negotiation is to be used. The precise rules for setting $SERV\_NEG_S$ are specified in 2.6.4.2 and 2.6.6.2.5.1.

For CDMA operation in band classes other than Band Class 0, the mobile station shall set $SERV\_NEG_S$ to enabled.

2.6.4.1.2.1.3 Maintaining the Service Option Request Number

The mobile station shall maintain a service option request number variable, SO_REQ_S, for use with service option negotiation. The mobile station shall set SO_REQ_S to a special value, NULL, if the mobile station does not have an outstanding service option request. If the mobile station has an outstanding service option request, the mobile station shall set SO_REQ_S to the number of the service option associated with the outstanding request.

2.6.4.1.2.1.4 Stored Service Configuration and Reconnection

This section provides an overview of how the mobile station and the base station may store the service configuration and how the stored service configuration may be restored upon re-establishing dedicated channels.

Upon establishing a call and entering the *Mobile Station Control on the Traffic Channel State*, service negotiation procedures are performed as specified in 2.6.4.1.2.2 to establish a mutually acceptable service configuration between the mobile station and the base station. The service configuration consists of parameters specified via the Service Configuration information record (see 3.7.5.7) and Non-Negotiable Service Configuration information record (see 3.7.5.20). The mobile station and the base station may store the established service configuration. This is done so that when the call is re-established, the stored service configuration may be restored and without performing the service negotiation procedures. In order to ensure that the service configuration restored at the

mobile station and the base station are identical (that is, the values of the service configuration parameters are identical), a service configuration synchronization identifier (called SYNC_ID) is associated with each stored service configuration. SYNC_ID is a variable length identifier assigned by the base station corresponding to a particular Service Configuration information record and Non-negotiable Service Configuration information record. The SYNC_ID value is used by the base station to determine whether these two information records may be omitted from the *Service Connect Message*.

When $P\_REV\_IN\_USE_S$ is less than or equal to six, there is no requirement on storing the established service configuration for future use. In this case, when a call is re-established and the mobile station enters the *Mobile Station Control on the Traffic Channel State*, service configuration must be re-established by performing service negotiation procedures again.

When $P\_REV\_IN\_USE_S$ is greater than six, based on the value of SYNC_ID included by the mobile station in the *Origination Message*, *Page Response Message*, or *Enhanced Origination Message* the base station may not send the Service Configuration information record and the Non-negotiable Service Configuration information record over the air and instructs the mobile station to start using the stored information records corresponding to the SYNC_ID reported by the mobile station.

When $P\_REV\_IN\_USE_S$ is equal to or greater than nine, the mobile station is required to store minimum of four service configurations. Also, the stored service configuration can be restored incrementally as well. That is, if N service option connections are contained in the stored service configuration, then the mobile station can request to restore one of these service option connections upon establishing dedicated channels. This is achieved via the SR_ID field of the *Origination Message* or *Reconnect Message*. Once operating on the dedicated channels, the mobile station can request to restore additional service option connections via the *Enhanced Origination Message*. The base station in turn can grant the mobile station request via *Extended Channel Assignment Message*, *Service Connect Message*, or *Call Assignment Message*. If the base station uses *Extended Channel Assignment Message* to grant the mobile station request, then the base station is not required to send a *Service Connect Message*. During traffic channel operation, service option connections are to be restored only from the SYNC_ID that is currently in use (if any).

When $P\_REV\_IN\_USE_S$ is equal to or greater than 11, the base station can autonomously order the mobile station to restore a stored service configuration via the *Extended Channel Assignment Message* or *Service Connect Message* even when the mobile station has not requested to restore a service configuration, or when the mobile station has requested to restore a different service configuration. Additionally, the base station can signal the SYNC_ID value corresponding to the currently used service configuration using the *Universal Handoff Direction Message*.

2.6.4.1.2.2 Service Subfunctions

As illustrated in Figure 2.6.4.1.2.2-1, the mobile station supports service configuration and negotiation by performing the following set of service subfunctions:

- *Normal Service Subfunction* - While this subfunction is active, the mobile station processes service configuration requests from the user and from the base station.
- *Waiting for Service Request Message Subfunction* - While this subfunction is active, the mobile station waits to receive a S*ervice Request Message*.
- *Waiting for Service Response Message Subfunction* - While this subfunction is active, the mobile station waits to receive a *Service Response Message*.
- *Waiting for Service Connect Message Subfunction* - While this subfunction is active, the mobile station waits to receive a *Service Connect Message*, a *General Handoff Direction Message, or a Universal Handoff Direction Message* containing a service configuration record.
- *Waiting for Service Action Time Subfunction* - While this subfunction is active, the mobile station waits for the action time associated with a new service configuration and then sends a *Service Connect Completion Message*, a *Handoff Completion Message*, or an *Extended Handoff Completion Message*.
- *SO Negotiation Subfunction* - While this subfunction is active, the mobile station supports service option negotiation with the base station. This subfunction is only used while operating in Band Class 0.

The *SO Negotiation Subfunction* supports service option negotiation. All of the other service subfunctions support service negotiation.

At any given time during Traffic Channel operation, only one of the service subfunctions is active. For example, when the mobile station first enters the *Traffic Channel Initialization Substate* of the *Mobile Station Control on the Traffic Channel State*, the *Normal Service Subfunction*, the *Waiting for Service Connect Message Subfunction* or the *SO Negotiation Subfunction* is active. Each of the other service subfunctions may become active in response to various events which occur during the Traffic Channel substates. Typically, the mobile station processes events pertaining to service configuration and negotiation in accordance with the requirements for the active service subfunction, however, some Traffic Channel substates do not allow for the processing of certain events pertaining to service configuration and negotiation, or specify requirements for processing such events which supersede the requirements of the active service subfunction.

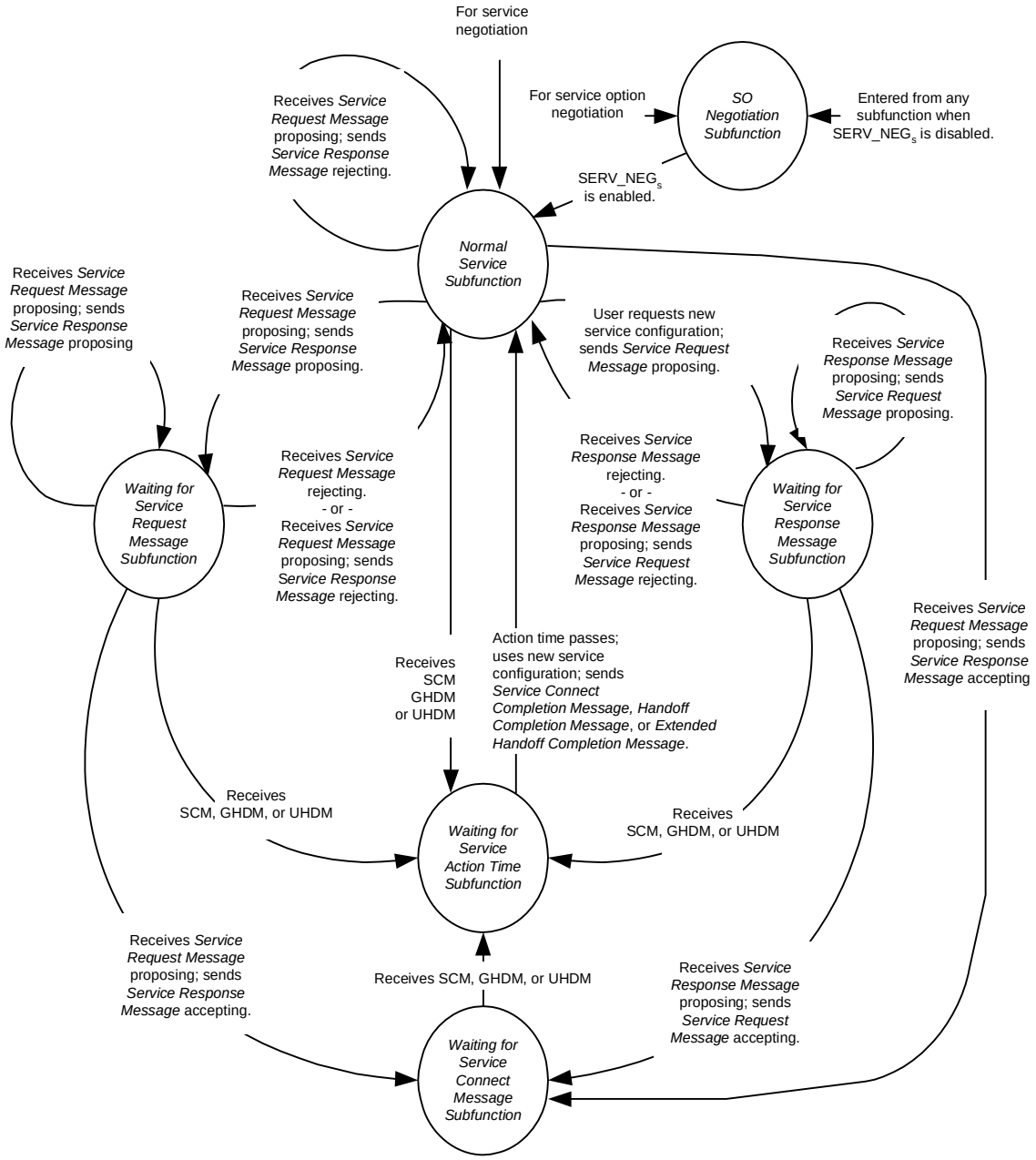

Notes:

- SCM stands for *Service Connect Message*.
- GHDM stands for *General Handoff Direction Message*.
- UHDM stands for *Universal Handoff Direction Message*.
- Processing for special cases, such as timeouts and errors, is not shown in this diagram.

Figure 2.6.4.1.2.2-1. Mobile Station Service Subfunctions

2.6.4.1.2.2.1 Normal Service Subfunction

While this subfunction is active, the mobile station processes service configuration requests from the user and from the base station.

While the *Normal Service Subfunction* is active, the mobile station shall perform the following:

- The mobile station shall process Forward and Reverse Traffic Channel frames in accordance with the current service configuration. The mobile station shall discard any Forward Traffic Channel frame which has a format that is not supported by the mobile station. The mobile station may discard any type of Forward Traffic Channel traffic that is not signaling traffic and is not part of the current service configuration.
- To initiate service negotiation for a new service configuration, the mobile station shall send a *Service Request Message* to propose the new service configuration. The mobile station shall activate the *Waiting for Service Response Message Subfunction*.
- For any service option connection that is part of the current service configuration, the mobile station may send a *Service Option Control Message* to invoke a service option specific function in accordance with the requirements for the associated service option.
- If $SERV\_NEG_s$ changes from enabled to disabled (see 2.6.6.2.5.1), the mobile station shall activate the *SO Negotiation Subfunction*.
- If the mobile station receives one of the following service negotiation messages, the mobile station shall process the message according to the specified requirements:

  1. *Service Connect Message:* The mobile station shall perform the following:
     - If $USE\_OLD\_SERV\_CONFIG_r$ equals '01' or '10', and if the mobile station entered the *Mobile Station Control on the Traffic Channel State* due to receiving an *Extended Channel Assignment Message* with GRANTED_MODE set to '11', the mobile station shall send a *Mobile Station Reject Order* with the ORDQ field set to '00010100' (stored configuration already restored at channel assignment) within T_{56m} seconds and shall not perform the rest of the procedures below.
     - If $USE\_OLD\_SERV\_CONFIG_r$ equals '00', the mobile station shall perform the following: If the mobile station accepts the service configuration specified in the message, the mobile station shall activate the Waiting for Service Action Time Subfunction; otherwise, the mobile station shall send a Mobile Station Reject Order (ORDQ = '00000111') within T_{56m} seconds.

- If $USE\_OLD\_SERV\_CONFIG_r$ equals '01', the mobile station shall perform the following: If the mobile station accepts the service configuration currently stored at the mobile station, the mobile station shall activate the Waiting for Service Action Time Subfunction; otherwise, the mobile station shall send a Mobile Station Reject Order (ORDQ = '00000111') within T_{56m} seconds.

- If $USE\_OLD\_SERV\_CONFIG_r$ equals '10', the mobile station shall perform the following: If the mobile station accepts the service configuration resulting from updating the stored service configuration with the service configuration received in this message, the mobile station shall activate the Waiting for Service Action Time Subfunction; otherwise, the mobile station shall send a Mobile Station Reject Order (ORDQ = '00000111') within T_{56m} seconds.

- If $USE\_OLD\_SERV\_CONFIG_r$ equals '11', the mobile station shall perform the following: if the mobile station accepts the service configuration resulting from restoring the indicated service option connection records from the stored service configuration and releasing the indicated service option connection records from the current service configuration, the mobile station shall activate the Waiting for Service Action Time Subfunction; otherwise, the mobile station shall send a *Mobile Station Reject Order* (ORDQ = '00000111') within T_{56m} seconds.

2. *Service Option Control Message:* If the service option connection specified by the message is part of the current service configuration, and the service option specified by the message is the same as the service option associated with the service option connection, the mobile station shall interpret the action time of the message as specified in 2.6.4.1.5, and shall process the message in accordance with the requirements for the service option; otherwise, the mobile station shall send a *Mobile Station Reject Order* (ORDQ = '00000111') within T_{56m} seconds.

3. *Service Request Message:* The mobile station shall process the message as follows:

   – If the purpose of the message is to reject a proposed service configuration, the mobile station shall send a *Mobile Station Reject Order* (ORDQ = '00000010') within T_{56m} seconds.

   – If the purpose of the message is to propose a service configuration, the mobile station shall process the message as follows:

     + If the mobile station accepts the proposed service configuration, the mobile station shall send a *Service Response Message* to accept the proposed service configuration within T_{59m} seconds. The mobile station shall activate the *Waiting for Service Connect Message Subfunction*.

+ If the mobile station does not accept the proposed service configuration and does not have an alternative service configuration to propose, the mobile station shall send a *Service Response Message* to reject the proposed service configuration within T_{59m} seconds.

+ If the mobile station does not accept the proposed service configuration and has an alternative service configuration to propose, the mobile station shall send a *Service Response Message* to propose the alternative service configuration within T_{59m} seconds. The mobile station shall activate the *Waiting for Service Request Message Subfunction*.

4. *Service Response Message:* The mobile station shall send a *Mobile Station Reject Order* (ORDQ = '00000010') within T_{56m} seconds.

5. *General Handoff Direction Message:* If the SCR_INCLUDED field is included in this message and is set to '1':

   If the mobile station has not rejected this message, the mobile station shall activate the *Waiting for Service Action Time Subfunction*.

6. *Universal Handoff Direction Message:* If the SCR_INCLUDED field is included in this message and is set to '1':

   If the mobile station has not rejected this message, the mobile station shall activate the *Waiting for Service Action Time Subfunction*.

- If the mobile station receives one of the following service option negotiation messages, the mobile station shall send a *Mobile Station Reject Order* (ORDQ = '00000010') within T_{56m} seconds:

  1. *Service Option Request Order*
  2. *Service Option Response Order*
  3. *Service Option Control Order*

2.6.4.1.2.2.2 Waiting for Service Request Message Subfunction

While this subfunction is active, the mobile station waits to receive a S*ervice Request Message*.

Upon activation of the *Waiting for Service Request Message Subfunction*, the mobile station shall set the subfunction timer for T_{68m} seconds.

While the *Waiting for Service Request Message Subfunction* is active, the mobile station shall perform the following:

- If the subfunction timer expires, the mobile station shall activate the *Normal Service Subfunction*.

- The mobile station shall process Forward and Reverse Traffic Channel frames in accordance with the current service configuration. The mobile station shall discard any Forward Traffic Channel frame which has a format that is not supported by the mobile station. The mobile station may discard any type of Forward Traffic Channel traffic that is not signaling traffic and is not part of the current service configuration.
- The mobile station shall not initiate service negotiation for a new service configuration.
- For any service option connection that is part of the current service configuration, the mobile station may send a *Service Option Control Message* to invoke a service option specific function in accordance with the requirements for the associated service option.
- If $SERV\_NEG_s$ changes from enabled to disabled (see 2.6.6.2.5.1), the mobile station shall activate the *SO Negotiation Subfunction*.
- If the mobile station receives one of the following service negotiation messages, the mobile station shall process the message according to the specified requirements:

  1. *Service Connect Message:* The mobile station shall perform the following:
     - If $USE\_OLD\_SERV\_CONFIG_r$ equals '01' or '10', and if the mobile station entered the *Mobile Station Control on the Traffic Channel State* due to receiving an *Extended Channel Assignment Message* with GRANTED_MODE set to '11', the mobile station shall send a *Mobile Station Reject Order* with the ORDQ field set to '00010100' (stored configuration already restored at channel assignment) within T_{56m} seconds, and shall activate the *Normal Service Subfunction*.
     - If $USE\_OLD\_SERV\_CONFIG_r$ equals '00', the mobile station shall perform the following: If the mobile station accepts the service configuration specified in the message, the mobile station shall activate the *Waiting for Service Action Time Subfunction*; otherwise, the mobile station shall send a *Mobile Station Reject Order* (ORDQ = '00000111') within T_{56m} seconds and shall activate the *Normal Service Subfunction*.
     - If $USE\_OLD\_SERV\_CONFIG_r$ equals '01', the mobile station shall perform the following: If the mobile station accepts the service configuration currently stored at the mobile station, the mobile station shall activate the Waiting for Service Action Time Subfunction; otherwise, the mobile station shall send a Mobile Station Reject Order (ORDQ = '00000111') within T_{56m} seconds and shall activate the *Normal Service Subfunction*.
     - If $USE\_OLD\_SERV\_CONFIG_r$ equals '10', the mobile station shall perform the following: If the mobile station accepts the service configuration resulting from updating the stored service configuration with the service configuration received in this message, the mobile station shall activate the Waiting for Service Action Time Subfunction;

otherwise, the mobile station shall send a Mobile Station Reject Order (ORDQ = '00000111') within T_{56m} seconds and shall activate the *Normal Service Subfunction*.

- If $USE\_OLD\_SERV\_CONFIG_r$ equals '11', the mobile station shall perform the following: if the mobile station accepts the service configuration resulting from restoring the indicated service option connection records from the stored service configuration and releasing the indicated service option connection records from the current service configuration, the mobile station shall activate the Waiting for Service Action Time Subfunction; otherwise, the mobile station shall send a *Mobile Station Reject Order* (ORDQ = '00000111') within T_{56m} seconds and shall activate the *Normal Service Subfunction*.

2. *Service Option Control Message:* If the service option connection specified by the message is part of the current service configuration, and the service option specified by the message is the same as the service option associated with the service option connection, the mobile station shall interpret the action time of the message as specified in 2.6.4.1.5, and shall process the message in accordance with the requirements for the service option; otherwise, the mobile station shall send a *Mobile Station Reject Order* (ORDQ = '00000111') within T_{56m} seconds.

3. *Service Request Message:* The mobile station shall process the message as follows:

   – If the purpose of the message is to reject a proposed service configuration, the mobile station shall activate the *Normal Service Subfunction*.

   – If the purpose of the message is to propose a service configuration, the mobile station shall process the message as follows:

     + If the mobile station accepts the proposed service configuration, the mobile station shall send a *Service Response Message* to accept the proposed service configuration within T_{59m} seconds. The mobile station shall activate the *Waiting for Service Connect Message Subfunction*.

     + If the mobile station does not accept the proposed service configuration and does not have an alternative service configuration to propose, the mobile station shall send a *Service Response Message* to reject the proposed service configuration within T_{59m} seconds. The mobile station shall activate the *Normal Service Subfunction*.

     + If the mobile station does not accept the proposed service configuration and has an alternative service configuration to propose, the mobile station shall send a *Service Response Message* to propose the alternative service configuration within T_{59m} seconds. The mobile station shall reset the subfunction timer for T_{68m} seconds.

4. *Service Response Message:* The mobile station shall send a *Mobile Station Reject Order* (ORDQ = '00000010') within T_{56m} seconds.

5. *General Handoff Direction Message:* If the SCR_INCLUDED field is included in this message and is set to '1':

   If the mobile station has not rejected this message, the mobile station shall activate the *Waiting for Service Action Time Subfunction*; otherwise, the mobile station shall activate the *Normal Service Subfunction*.

6. *Universal Handoff Direction Message:* If the SCR_INCLUDED field is included in this message and is set to '1':

   If the mobile station has not rejected this message, the mobile station shall activate the *Waiting for Service Action Time Subfunction*; otherwise, the mobile station shall activate the *Normal Service Subfunction*.

- If the mobile station receives one of the following service option negotiation messages, the mobile station shall send a *Mobile Station Reject Order* (ORDQ = '00000010') within T_{56m} seconds:

  1. *Service Option Request Order*
  2. *Service Option Response Order*
  3. *Service Option Control Order*

2.6.4.1.2.2.3 Waiting for Service Response Message Subfunction

While this subfunction is active, the mobile station waits to receive a *Service Response Message*.

Upon activation of the *Waiting for Service Response Message Subfunction*, the mobile station shall set the subfunction timer for T_{68m} seconds.

While the *Waiting for Service Response Message Subfunction* is active, the mobile station shall perform the following:

- If the subfunction timer expires, the mobile station shall activate the *Normal Service Subfunction*.
- The mobile station shall process Forward and Reverse Traffic Channel frames in accordance with the current service configuration. The mobile station shall discard any Forward Traffic Channel frame which has a format that is not supported by the mobile station. The mobile station may discard any type of Forward Traffic Channel traffic that is not signaling traffic and is not part of the current service configuration.
- The mobile station shall not initiate service negotiation for a new service configuration.
- For any service option connection that is part of the current service configuration, the mobile station may send a *Service Option Control Message* to invoke a service option specific function in accordance with the requirements for the associated service option.
- If $SERV\_NEG_S$ changes from enabled to disabled (see 2.6.6.2.5.1), the mobile station shall activate the *SO Negotiation Subfunction*.

- If the mobile station receives one of the following service negotiation messages, the mobile station shall process the message according to the specified requirements:

  1. *Service Connect Message:* The mobile station shall perform the following:

     - If $USE\_OLD\_SERV\_CONFIG_r$ equals '01' or '10', and if the mobile station entered the *Mobile Station Control on the Traffic Channel State* due to receiving an *Extended Channel Assignment Message* with GRANTED_MODE set to '11', the mobile station shall send a *Mobile Station Reject Order* with the ORDQ field set to '00010100' (stored configuration already restored at channel assignment) within T_{56m} seconds, and shall activate the *Normal Service Subfunction*.

     - If $USE\_OLD\_SERV\_CONFIG_r$ equals '00', the mobile station shall perform the following: If the mobile station accepts the service configuration specified in the message, the mobile station shall activate the *Waiting for Service Action Time Subfunction*; otherwise, the mobile station shall send a *Mobile Station Reject Order* (ORDQ = '00000111') within T_{56m} seconds and shall activate the *Normal Service Subfunction*.

     - If $USE\_OLD\_SERV\_CONFIG_r$ equals '01', the mobile station shall perform the following: If the mobile station accepts the service configuration currently stored at the mobile station, the mobile station shall activate the Waiting for Service Action Time Subfunction; otherwise, the mobile station shall send a Mobile Station Reject Order (ORDQ = '00000111') within T_{56m} seconds and shall activate the *Normal Service Subfunction*.

     - If $USE\_OLD\_SERV\_CONFIG_r$ equals '10', the mobile station shall perform the following: If the mobile station accepts the service configuration resulting from updating the stored service configuration with the service configuration received in this message, the mobile station shall activate the Waiting for Service Action Time Subfunction; otherwise, the mobile station shall send a Mobile Station Reject Order (ORDQ = '00000111') within T_{56m} seconds and shall activate the *Normal Service Subfunction*.

     - If $USE\_OLD\_SERV\_CONFIG_r$ equals '11', the mobile station shall perform the following: if the mobile station accepts the service configuration resulting from restoring the indicated service option connection records from the stored service configuration and releasing the indicated service option connection records from the current service configuration, the mobile station shall activate the Waiting for Service Action Time Subfunction; otherwise, the mobile station shall send a *Mobile Station Reject Order* (ORDQ = '00000111') within T_{56m} seconds and shall activate the *Normal Service Subfunction*.

2. *Service Option Control Message:* If the service option connection specified by the message is part of the current service configuration, and the service option specified by the message is the same as the service option associated with the service option connection, the mobile station shall interpret the action time of the message as specified in 2.6.4.1.5, and shall process the message in accordance with the requirements for the service option; otherwise, the mobile station shall send a *Mobile Station Reject Order* (ORDQ = '00000111') within T_{56m} seconds.

3. *Service Request Message:* The mobile station shall process the message as follows:

   – If the purpose of the message is to reject a proposed service configuration, the mobile station shall send a *Mobile Station Reject Order* (ORDQ = '00000010') within T_{56m} seconds.

   – If the purpose of the message is to propose a service configuration, the mobile station shall discontinue processing the service configuration requested by the user and shall process the message as follows:

     + If the mobile station accepts the proposed service configuration, the mobile station shall send a *Service Response Message* to accept the proposed service configuration within T_{59m} seconds. The mobile station shall activate the *Waiting for Service Connect Message Subfunction*.

     + If the mobile station does not accept the proposed service configuration and does not have an alternative service configuration to propose, the mobile station shall send a *Service Response Message* to reject the proposed service configuration within T_{59m} seconds. The mobile station shall activate the *Normal Service Subfunction*.

     + If the mobile station does not accept the proposed service configuration and has an alternative service configuration to propose, the mobile station shall send a *Service Response Message* to propose the alternative service configuration within T_{59m} seconds. The mobile station shall activate the *Waiting for Service Request Message Subfunction*.

4. *Service Response Message:* The mobile station shall process the message as follows:

   – If the service request sequence number ($SERV\_REQ\_SEQ_r$) from the message does not match the sequence number of the *Service Request Message* for which the mobile station is expecting a response, the mobile station shall not process the other Layer 3 fields of the message.

   – If the purpose of the message is to reject the service configuration proposed in the corresponding *Service Request Message*, the mobile station shall activate the *Normal Service Subfunction*. The mobile station may indicate to the user that the requested service configuration has been rejected.

   – If the purpose of the message is to propose a service configuration, the mobile station shall process the message as follows:

+ If the mobile station accepts the proposed service configuration, the mobile station shall send a *Service Request Message* to accept the proposed service configuration within T_{59m} seconds. The mobile station shall activate the *Waiting for Service Connect Message Subfunction*.

+ If the mobile station does not accept the proposed service configuration and does not have an alternative service configuration to propose, the mobile station shall send a *Service Request Message* to reject the proposed service configuration within T_{59m} seconds. The mobile station shall activate the *Normal Service Subfunction*.

+ If the mobile station does not accept the proposed service configuration and has an alternative service configuration to propose, the mobile station shall send a *Service Request Message* to propose the alternative service configuration within T_{59m} seconds. The mobile station shall reset the subfunction timer for T_{68m} seconds.

5. *General Handoff Direction Message:* If the SCR_INCLUDED field is included in this message and is set to '1':

   If the mobile station has not rejected this message, the mobile station shall activate the *Waiting for Service Action Time Subfunction*; otherwise, the mobile station shall activate the *Normal Service Subfunction*.

6. *Universal Handoff Direction Message:* If the SCR_INCLUDED field is included in this message and is set to '1':

   If the mobile station has not rejected this message, the mobile station shall activate the *Waiting for Service Action Time Subfunction*; otherwise, the mobile station shall activate the *Normal Service Subfunction*.

- If the mobile station receives one of the following service option negotiation messages, the mobile station shall send a *Mobile Station Reject Order* (ORDQ = '00000010') within T_{56m} seconds:

  1. *Service Option Request Order*
  2. *Service Option Response Order*
  3. *Service Option Control Order*

2.6.4.1.2.2.4 Waiting for Service Connect Message Subfunction

While this subfunction is active, the mobile station waits to receive a *Service Connect Message*, a *General Handoff Direction Message*, or a *Universal Handoff Direction Message* containing a service configuration record.

Upon activation of the *Waiting for Service Connect Message Subfunction*, the mobile station shall set the subfunction timer for T_{65m} seconds.

While the *Waiting for Service Connect Message Subfunction* is active, the mobile station shall perform the following:

- If the subfunction timer expires, the mobile station shall activate the *Normal Service Subfunction*.
- The mobile station shall process Forward and Reverse Traffic Channel frames in accordance with the current service configuration. The mobile station shall discard any Forward Traffic Channel frame which has a format that is not supported by the mobile station. The mobile station may discard any type of Forward Traffic Channel traffic that is not signaling traffic and is not part of the current service configuration.
- The mobile station shall not initiate service negotiation for a new service configuration.
- For any service option connection that is part of the current service configuration, the mobile station may send a *Service Option Control Message* to invoke a service option specific function in accordance with the requirements for the associated service option.
- If $SERV\_NEG_s$ changes from enabled to disabled (see 2.6.6.2.5.1), the mobile station shall activate the *SO Negotiation Subfunction*.
- If the mobile station receives one of the following service negotiation messages, the mobile station shall process the message according to the specified requirements:

  1. *Service Connect Message:* The mobile station shall perform the following:
     - If $USE\_OLD\_SERV\_CONFIG_r$ equals '01' or '10', and if the mobile station entered the *Mobile Station Control on the Traffic Channel State* due to receiving an *Extended Channel Assignment Message* with GRANTED_MODE set to '11', the mobile station shall send a *Mobile Station Reject Order* with the ORDQ field set to '00010100' (stored configuration already restored at channel assignment) within T_{56m} seconds, and shall activate the *Normal Service Subfunction*.
     - If $USE\_OLD\_SERV\_CONFIG_r$ equals '00', the mobile station shall perform the following: If the mobile station accepts the service configuration specified in the message, the mobile station shall activate the *Waiting for Service Action Time Subfunction*; otherwise, the mobile station shall send a *Mobile Station Reject Order* (ORDQ = '00000111') within T_{56m} seconds and shall activate the *Normal Service Subfunction*.
     - If $USE\_OLD\_SERV\_CONFIG_r$ equals '01', the mobile station shall perform the following: If the mobile station accepts the service configuration currently stored at the mobile station, the mobile station shall activate the Waiting for Service Action Time Subfunction; otherwise, the mobile station shall send a Mobile Station Reject Order (ORDQ = '00000111') within T_{56m} seconds, and shall activate the *Normal Service Subfunction*.

- If $USE\_OLD\_SERV\_CONFIG_r$ equals '10', the mobile station shall perform the following: If the mobile station accepts the service configuration resulting from updating the stored service configuration with the service configuration received in this message, the mobile station shall activate the Waiting for Service Action Time Subfunction; otherwise, the mobile station shall send a Mobile Station Reject Order (ORDQ = '00000111') within T_{56m} seconds, and shall activate the *Normal Service Subfunction*.
- If $USE\_OLD\_SERV\_CONFIG_r$ equals '11', the mobile station shall perform the following: if the mobile station accepts the service configuration resulting from restoring the indicated service option connection records from the stored service configuration and releasing the indicated service option connection records from the current service configuration, the mobile station shall activate the Waiting for Service Action Time Subfunction; otherwise, the mobile station shall send a *Mobile Station Reject Order* (ORDQ = '00000111') within T_{56m} seconds, and shall activate the *Normal Service Subfunction*.

2. *Service Option Control Message:* If the service option connection specified by the message is part of the current service configuration, and the service option specified by the message is the same as the service option associated with the service option connection, the mobile station shall interpret the action time of the message as specified in 2.6.4.1.5, and shall process the message in accordance with the requirements for the service option; otherwise, the mobile station shall send a *Mobile Station Reject Order* (ORDQ = '00000111') within T_{56m} seconds.

3. *Service Request Message:* The mobile station shall process the message as follows:

   – If the purpose of the message is to reject a proposed service configuration, the mobile station shall send a *Mobile Station Reject Order* (ORDQ = '00000010') within T_{56m} seconds.

   – If the purpose of the message is to propose a service configuration, the mobile station shall process the message as follows:

     + If the mobile station accepts the proposed service configuration, the mobile station shall send a *Service Response Message* to accept the proposed service configuration within T_{59m} seconds. The mobile station shall reset the subfunction timer for T_{65m} seconds.

     + If the mobile station does not accept the proposed service configuration and does not have an alternative service configuration to propose, the mobile station shall send a *Service Response Message* to reject the proposed service configuration within T_{59m} seconds. The mobile station shall activate the *Normal Service Subfunction*.

+ If the mobile station does not accept the proposed service configuration and has an alternative service configuration to propose, the mobile station shall send a *Service Response Message* to propose the alternative service configuration within T_{59m} seconds. The mobile station shall activate the *Waiting for Service Request Message Subfunction*.

4. *Service Response Message:* The mobile station shall send a *Mobile Station Reject Order* (ORDQ = '00000010') within T_{56m} seconds.

5. *General Handoff Direction Message:* If the SCR_INCLUDED field is included in this message and is set to '1':

   If the mobile station has not rejected this message, the mobile station shall activate the *Waiting for Service Action Time Subfunction*; otherwise, the mobile station shall activate the *Normal Service Subfunction*.

6. *Universal Handoff Direction Message:* If the SCR_INCLUDED field is included in this message and is set to '1':

   If the mobile station has not rejected this message, the mobile station shall activate *the Waiting for Service Action Time Subfunction*; otherwise, the mobile station shall activate the *Normal Service Subfunction*.

- If the mobile station receives one of the following service option negotiation messages, the mobile station shall send a *Mobile Station Reject Order* (ORDQ = '00000010') within T_{56m} seconds:

  1. *Service Option Request Order*
  2. *Service Option Response Order*
  3. *Service Option Control Order*

2.6.4.1.2.2.5 Waiting for Service Action Time Subfunction

While this subfunction is active, the mobile station waits for the action time associated with a new service configuration. If the action time was specified by a *Service Connect Message,* the mobile station shall send the *Service Connect Completion Message* at the action time.

While the *Waiting for Service Action Time Subfunction* is active, the mobile station shall perform the following:

- Prior to the action time associated with the *Service Connect Message*, *General Handoff Direction Message* (containing a service configuration record)*, or Universal Handoff Direction Message* (containing a service configuration record), the mobile station shall process Forward and Reverse Traffic Channel frames in accordance with the current service configuration. The mobile station shall discard any Forward Traffic Channel frame which has a format that is not supported by the mobile station. The mobile station may discard any type of Forward Traffic Channel traffic that is not signaling traffic and is not part of the current service configuration.

- At the action time associated with the *Service Connect Message*, *General Handoff Direction Message* (containing a service configuration record) or *Universal Handoff Direction Message* (containing a service configuration record), the mobile station shall perform the following[29]:
  - If this is a *Service Connect Message* and $USE\_TYPE0\_PLCM_r$ equals '1', the mobile station shall perform the following:
    - If $P\_REV\_IN\_USE_s$ is less than 11, set $PLCM\_TYPE_s$ to '0000'; otherwise set $PLCM\_TYPE_s$ to '0100'.
    - The mobile station shall use the Public Long Code Mask derived from $PLCM\_TYPE_s$ as specified in 2.3.6.
  - If this is a *Service Connect Message* with $USE\_OLD\_SERV\_CONFIG_r$ equals '01', the mobile station shall perform the following:
    - If $SYNC\_ID\_INCL_r$ is included and set to '1', the $SYNC\_ID_r$ indicates the stored service configuration to be restored; otherwise, the SYNC_ID conveyed by the mobile station indicates the stored service configuration to be restored.
    - The Call Control instance identified by NULL shall also be identified by the connection reference assigned to the first service option connection in the stored Service Configuration information record.
    - For each service option connection (with corresponding connection reference CON_REF_i) in the stored service configuration record, if any, except for the first one, Layer 3 shall instantiate a Call Control instance (as specified in 2.6.10) with a 'restore indication'. The mobile station shall identify each of these Call Control instances by the corresponding CON_REF_i.
    - The mobile station shall begin to use the stored service configuration corresponding to this SYNC_ID as the current service configuration as specified in 2.6.4.1.2.2.5.2 and shall begin to process Forward and Reverse Traffic Channel frames accordingly. The mobile station shall send a *Service Connect Completion Message* within T_{56m} seconds after the action time.
    - The mobile station shall store the synchronization identifier corresponding to the stored service configuration as $SYNC\_ID_s$.

---

[29] Note that these procedures that take place at the action time may not occur for this message if a GHDM/UHDM with SCR_INCLUDED equal to '1' is received before the action time of this message. In this case, these procedures take place for the new message. One exception is that the call assignments from this message take effect at the action time of this message regardless of the call assignments from the new message.

+ The mobile station shall exit this subfunction and activate the *Normal Service Subfunction*.

– If this is a *Service Connect Message* with $USE\_OLD\_SERV\_CONFIG_r$ equals '10', the mobile station shall perform the following:

+ If $SYNC\_ID\_INCL_r$ is included and set to '1' and $SYNC\_ID\_BS\_INITIATED\_IND_r$ is set to '1', the $SYNC\_ID_r$ indicates the stored service configuration to be restored; otherwise, the SYNC_ID conveyed by the mobile station indicates the stored service configuration to be restored.

+ The mobile station shall update the stored service configuration with the received service configuration as follows:

  o The mobile station shall restore the stored service configuration as specified in 2.6.4.1.2.2.5.2.

  o The mobile station shall process the received Service Configuration Record as specified in 2.6.4.1.12.

  o The mobile station shall process the received Non-negotiable Service Configuration Record as specified in 2.6.4.1.13.

+ For each service option connection (with corresponding connection reference CON_REF_i) in the stored service configuration record, if any, except for the first one, Layer 3 shall instantiate a Call Control instance (as specified in 2.6.10) with a 'restore indication'. The mobile station shall identify each of these Call Control instances by the corresponding CON_REF_i.

+ The mobile station shall begin to use the updated service configuration as the current service configuration and shall begin to process Forward and Reverse Traffic Channel frames accordingly. The mobile station shall send a *Service Connect Completion Message* within T_{56m} seconds after the action time.

+ If $SYNC\_ID\_INCL_r$ is set to '1' and $SYNC\_ID\_BS\_INITIATED\_IND_r$ is set to '0', the mobile station shall perform the following::

  o The mobile station shall store the synchronization identifier received from the base station ($SYNC\_ID_s = SYNC\_ID_r$).

  o The mobile station shall store the new service configuration corresponding to $SYNC\_ID_s$ as specified in 2.6.4.1.2.2.5.1.

  Otherwise, the mobile station shall set $SYNC\_ID_s$ to NULL.

+ The mobile station shall exit this subfunction and activate the *Normal Service Subfunction*.

- If this is a *Service Connect Message* with $USE\_OLD\_SERV\_CONFIG_r$ equals '11', the mobile station shall perform the following:
  - If the SYNC_ID_INCL field is included in this message and set to '1', the SYNC_ID included in this message indicates the stored service configuration to be restored; otherwise, the SYNC_ID conveyed by the mobile station indicates the stored service configuration to be restored.
    - Prior to this message, if an *Extended Channel Assignment Message* with GRANTED_MODE set to '11' was not received and a *Service Connect Message*, *General Handoff Direction Message* (with service configuration), or *Universal Handoff Direction Message* (with service configuration) was not successfully received or accepted by the mobile station since entering the *Traffic Channel Substate*, the mobile station shall perform the following:
      - The mobile station shall begin to use the service configuration which was stored by the mobile station when it left the *Mobile Station Control on the Traffic Channel State* as the current service configuration as specified in 2.6.4.1.2.2.5.2 where only the service option connection record corresponding to SR_ID_r received in the *Service Connect Message* shall be restored.
      - The Call Control instance identified by NULL shall also be identified by the connection reference assigned to the restored service option connection.
      - The mobile station shall begin to process Forward and Reverse Traffic Channel frames accordingly with the restored service configuration. The mobile station shall send a *Service Connect Completion Message* within T_{56m} seconds after the action time.
      - The mobile station shall store the synchronization identifier corresponding to the stored service configuration as $SYNC\_ID_s$.
      - The mobile station shall exit this subfunction and activate the *Normal Service Subfunction*.
    - Otherwise, the mobile station shall perform the following at the action time of this message:
      - The mobile station shall restore the indicated service option connection record(s) from the stored service configuration as specified in 2.6.4.1.2.2.5.2, where the service option connection records to be restored are determined as follows:
        - If SR_ID_r equals '111', the mobile station shall restore all remaining service option connection records. Otherwise, if

SR_ID$_r$ equals '000', the mobile station shall restore service option connection records corresponding to SR_ID$_s$ indicated by SR_ID_RESTORE_BITMAP$_r$ received in this message; otherwise the mobile station shall restore the service option connection record corresponding to the SR_ID$_r$ received in this message.

- Layer 3 shall instantiate a Call Control instance (as specified in 2.6.10) for each of the restored service option connections with a 'restore indication' and Layer 3 shall identify each of these Call Control instances by the value of the CON_REF field corresponding to the restored service option connection.

- The mobile station shall perform the following:
  - If SR_ID$_r$ equals '111', the mobile station shall disable the enhanced origination timers corresponding to each *Enhanced Origination Message* sent with SYNC_ID_INCL field set to '1' and shall remove the corresponding TAG value from the list TAG_OUTSTANDING_LIST.
  - Otherwise, the mobile station shall disable the enhanced origination timer corresponding to the *Enhanced Origination Message* with SR_ID field set to either '111' or to the SR_ID$_r$ value received in this message and shall remove the corresponding TAG value from the list TAG_OUTSTANDING_LIST.

◊ If the SR_ID_RELEASE_BITMAP_INCL field is included and is set to '1', the mobile station shall release the indicated service option connection record(s) from the current service configuration, where the service option connection records to be released are determined as follows:

- The mobile station shall release service option connection records corresponding to SR_IDs indicated by SR_ID_RELEASE_BITMAP$_r$ received in this message.

- Layer 3 shall terminate a Call Control instance for each of the released service option connections.

– Otherwise, the mobile station shall perform the following:

+ Prior to this message, if a *Service Connect Message*, *General Handoff Direction Message* (with service configuration), or *Universal Handoff Direction Message* (with service configuration) was not successfully received or accepted by the mobile station since entering the *Traffic Channel Substate*, the mobile station shall perform the following:

- o The mobile station shall set the service configuration parameters (i.e. those signaled via the Service Configuration information record and the Non-Negotiable Service Configuration information record) to their default values as specified in 2.6.4.2.

+ The mobile station shall process the received Service Configuration Record as specified in 2.6.4.1.12, shall process the received Non-negotiable Service Configuration Record as specified in 2.6.4.1.13 (if included), and shall begin to use the service configuration specified by the *Service Connect Message*, *General Handoff Direction Message* or *Universal Handoff Direction Message* containing a service configuration record as the current service configuration and shall begin to process Forward and Reverse Traffic Channel frames accordingly. If the action time was specified by a *Service Connect Message*, the mobile station shall send a *Service Connect Completion Message* within T_{56m} seconds after the action time.

+ If $SYNC\_ID\_INCL_r$ is set to '1', the mobile station shall perform the following:

- o The mobile station shall store the synchronization identifier received from the base station ($SYNC\_ID_s = SYNC\_ID_r$).

- o The mobile station shall store the new service configuration corresponding to $SYNC\_ID_s$ as specified in 2.6.4.1.2.2.5.1.

Otherwise, the mobile station shall set $SYNC\_ID_s$ to NULL.

+ If $P\_REV\_IN\_USE_s$ is greater than six, the Non-Negotiable Service Configuration information record is not included in this message, and the value of SR_ID corresponding to the logical resource of '0000' in the LOGICAL_TO_PHYSICAL_MAPPING_TABLE is NULL, the mobile station shall set this SR_ID field to the value specified in the Service Configuration information record.

+ If $CC\_INFO\_INCL_r$ equals '1', then for each of the $NUM\_CALLS\_ASSIGN_r$ occurrences of the call control parameters included in the message, the mobile station shall perform the following:

- o If $RESPONSE\_IND_r$ equals '1', and TAG_r matches any of the TAG values contained in the list TAG_OUTSTANDING_LIST, the Layer 3 shall instantiate a Call Control instance (as specified in 2.6.10). The mobile station shall identify this Call Control instance by CON_REF_r. The mobile station shall disable the enhanced origination timer associated with TAG_r and remove the TAG value specified by TAG_r from the list TAG_OUTSTANDING_LIST.

- o If $RESPONSE\_IND_r$ equals '0', the mobile station shall store the bypass indicator ($BYPASS\_ALERT\_ANSWER_s = BYPASS\_ALERT\_ANSWER_r$) and the Layer 3 shall instantiate a Call Control instance (as specified in 2.6.10). The mobile station shall identify this Call Control instance by CON_REF_r.

+ The mobile station shall exit this subfunction and activate the *Normal*

Service Subfunction.

- The mobile station shall not initiate service negotiation for a new service configuration.
- For any service option connection that is part of the current or pending service configuration, the mobile station may send a *Service Option Control Message* to invoke a service option specific function in accordance with the requirements for the associated service option.
- If $SERV\_NEG_S$ changes from enabled to disabled (see 2.6.6.2.5.1), the mobile station shall activate the *SO Negotiation Subfunction*.
- If the mobile station receives one of the following service negotiation messages, the mobile station shall process the message according to the specified requirements:

  1. *Service Connect Message:* The mobile station shall send a *Mobile Station Reject Order* (ORDQ = '00000010') within T_{56m} seconds.
  2. *Service Option Control Message:* If the service option connection specified by the message is part of the current or pending service configuration, and the service option specified by the message is the same as the service option associated with the service option connection, the mobile station shall interpret the action time of the message as specified in 2.6.4.1.5, and shall process the message in accordance with the requirements for the service option; otherwise, the mobile station shall send a *Mobile Station Reject Order* (ORDQ = '00000111') within T_{56m} seconds.
  3. *Service Request Message:* The mobile station shall send a *Mobile Station Reject Order* (ORDQ = '00000010') within T_{56m} seconds.
  4. *Service Response Message:* The mobile station shall send a *Mobile Station Reject Order* (ORDQ = '00000010') within T_{56m} seconds.
  5. *General Handoff Direction Message:* If the SCR_INCLUDED field is included in this message and is set to '1':

     If the mobile station has not rejected this message, the mobile station shall remain in this subfunction until the action time specified in the message, and shall perform the following:

     - The mobile station shall not perform the above procedures for the previous message. But the call assignments from the previous message (if any) shall take effect at the action time of the previous message.
     - The mobile station shall perform the above procedures for this message (that is, begin to use the service configuration specified by the *General Handoff Direction Message*) at the action time of this message.
  6. *Universal Handoff Direction Message:* If the SCR_INCLUDED field is included in this message and is set to '1':

     If the mobile station has not rejected this message, the mobile station shall

remain in this subfunction until the action time specified in the message, and shall perform the following:

- o The mobile station shall not perform the above procedures for the previous message. But the call assignments from the previous message (if any) shall take effect at the action time of the previous message.

- o The mobile station shall perform the above procedures for this message (that is, begin to use the service configuration and call assignments (if any) specified by the *Universal Handoff Direction Message*) at the action time of this message.

- If the mobile station receives one of the following service option negotiation messages, the mobile station shall send a *Mobile Station Reject Order* (ORDQ = '00000010') within T_{56m} seconds:

  1. *Service Option Request Order*
  2. *Service Option Response Order*
  3. *Service Option Control Order*

2.6.4.1.2.2.5.1 Storing a Service Configuration with SYNC_ID

The mobile station shall set NUM_SYNC_ID_SUPPORTED as follows:

- If the mobile station has not reported the Capability Information information record with the ADD_NUM_SYNC_ID field, the mobile station shall set NUM_SYNC_ID_SUPPORTED to four.
- If the mobile station has reported the Capability Information information record with the ADD_NUM_SYNC_ID field, the mobile station shall set NUM_SYNC_ID_SUPPORTED to five plus the value of the ADD_NUM_SYNC_ID field included in the Capability Information information record.

The mobile station shall be capable of storing a minimum of NUM_SYNC_ID_SUPPORTED service configurations along with their corresponding SYNC_ID, SID and NID.

Two SYNC_IDs are considered to be equal if and only if both the length and value of the SYNC_IDs is equal.

The mobile station shall use the following procedure in the order listed below to store the current service configuration when it is associated with a SYNC_ID:

- If the mobile station has a stored service configuration associated with SID_S, NID_S and $SYNC\_ID_S$, then the mobile station shall delete the stored service configuration.

- If the number of stored service configurations is NUM_SYNC_ID_SUPPORTED or more, the mobile station shall not delete the (NUM_SYNC_ID_SUPPORTED - 1) most recently used[30] service configuration(s) and corresponding synchronization identifier(s), SID(s), NID(s).

- The mobile station shall store the current service configuration (that is, parameters conveyed by both the Service Configuration information record and the Non-negotiable Service Configuration information record) and the $SYNC\_ID_S$ corresponding to the current service configuration along with SID_S and NID_S.

2.6.4.1.2.2.5.2 Restoring a stored Service Configuration based on SYNC_ID

When restoring a stored service configuration based on SYNC_ID, the mobile station shall restore only those parameters defined in the current $P\_REV\_IN\_USE_S$.

2.6.4.1.2.2.6 SO Negotiation Subfunction

The *SO Negotiation Subfunction* is only supported for mobile stations operating in Band Class 0.

Service option negotiation is not supported for $P\_REV\_IN\_USE_S$ greater than six.

Upon activation of the *SO Negotiation Subfunction,* the mobile station shall delete from the current service configuration any service option connection which does not use primary traffic on both the Forward and Reverse Traffic Channels and the Layer 3 shall terminate the corresponding Call Control instances. The Call Control instance corresponding to the service option connection which uses primary traffic, if any, shall be identified by NULL.

While the *SO Negotiation Subfunction* is active, the mobile station shall perform the following:

- If the current service configuration includes a service option connection, the mobile station shall process the received primary traffic bits in accordance with the requirements for the service option associated with the service option connection; otherwise, the mobile station shall discard the received primary traffic bits.

- If the current service configuration includes a service option connection, the mobile station shall transmit primary traffic bits in accordance with the requirements for the service option associated with the service option connection; otherwise, the mobile station shall transmit null traffic on the Reverse Fundamental Channel, if the Fundamental Channel is present or transmit power control bits on the Reverse Pilot Channel, if only the Dedicated Control Channel is present.

[30] The stored service configuration is considered used when it is stored for the first time or when it is used again during a call using the SYNC_ID feature.

- If the current service configuration includes a service option connection, the mobile station may send a *Service Option Control Order* to invoke a service option specific function in accordance with the requirements for the service option associated with the service option connection.
- To initiate service option negotiation, the mobile station shall set SO_REQ_S to the number of the requested service option and shall send a *Service Option Request Order* containing the requested service option number.
- If $SERV\_NEG_S$ changes from disabled to enabled (see 2.6.6.2.5.1), the mobile station shall set SO_REQ_S to NULL and shall activate the *Normal Service Subfunction*.
- If the mobile station receives a *Service Option Request Order*, it shall process the order as follows:
  - If the mobile station accepts the requested service option, the mobile station shall set SO_REQ_S to NULL and shall send a *Service Option Response Order* accepting the requested service option within T_{58m} seconds. The mobile station shall interpret the message action time of the *Service Option Request Order* in accordance with the requirements for the requested service option and the mobile station shall begin using the service configuration implied by the requested service option in accordance with those requirements. The implied service configuration shall include the default Forward and Reverse multiplex options and radio configurations associated with the requested service option, and shall include one service option connection for which the service option connection reference is 1, the service option is the requested service option, and the Forward and Reverse Traffic Channel types are both primary traffic. If a Call Control instance currently exists, the Layer 3 shall use this Call Control instance for a new service option connection; otherwise, the Layer 3 shall instantiate a Call Control instance (as specified in 2.6.10) and this Call Control instance shall be identified by both a connection reference with a value of 1 and a default identifier with a value of NULL.
  - If the mobile station does not accept the requested service option and has an alternative service option to request, the mobile station shall set SO_REQ_S to the alternative service option number and shall send a *Service Option Request Order* requesting the alternative service option within T_{58m} seconds.
  - If the mobile station does not accept the requested service option and does not have an alternative service option to request, the mobile station shall set SO_REQ_S to NULL and shall send a *Service Option Response Order* to reject the request within T_{58m} seconds. The mobile station shall continue to use the current service configuration.
- If the mobile station receives a *Service Option Response Order*, it shall process the order as follows:

- If the service option number specified in the order is equal to SO_REQ_S, the mobile station shall set SO_REQ_S to NULL. The mobile station shall interpret the message action time of the *Service Option Response Order* in accordance with the requirements for the specified service option, and the mobile station shall begin using the service configuration implied by the specified service option in accordance with those requirements. The implied service configuration shall include the default Forward and Reverse multiplex options and radio configurations associated with the specified service option, and shall include one service option connection for which the service option connection reference is 1, the service option is the specified service option, and the Forward and Reverse Traffic Channel types are both primary traffic. If a Call Control instance currently exists, the Layer 3 shall use this Call Control instance for a new service option connection; otherwise, the Layer 3 shall instantiate a Call Control instance (as specified in 2.6.10) and this Call Control instance shall be identified by both a connection reference with a value of 1 and a default identifier with a value of NULL.
- If the order indicates a service option rejection, the mobile station shall set SO_REQ_S to NULL. The mobile station shall continue to use the current service configuration.
- If the order does not indicate a service option rejection and the service option specified in the order is not equal to SO_REQ_S, the mobile station shall set SO_REQ_S to NULL and shall send a *Mobile Station Reject Order* (ORDQ = '00000100') within T_{58m} seconds. The mobile station shall continue to use the current service configuration.

- If the mobile station receives a *Service Option Control Order*, it shall process the order as follows:
  - If the current service configuration includes a service option connection, the mobile station shall interpret the message action time of the *Service Option Control Order* in accordance with the requirements for the service option associated with the service option connection and the mobile station shall process the *Service Option Control Order* in accordance with those requirements;
  - otherwise, the mobile station shall send a *Mobile Station Reject Order* (ORDQ = '00000001') within T_{56m} seconds.
- If the mobile station receives one of the following service negotiation messages, the mobile station shall send a *Mobile Station Reject Order* (ORDQ = '00000010') within T_{56m} seconds:
  1. *Service Connect Message*
  2. *Service Option Control Message*
  3. *Service Request Message*
  4. *Service Response Message*

2.6.4.1.3 Ordering of Messages

The Layer 2 protocol does not guarantee delivery of messages in any order. If the mobile station requires that the base station receive a set of messages in a certain order, the mobile station shall send each message in assured mode requiring confirmation of delivery and shall wait for the confirmation of delivery of each message before transmitting the next message in the set.

2.6.4.1.4 Processing the In-Traffic System Parameters Message

The mobile station shall store the following parameters from the *In-Traffic System Parameters Message*:

- System identification ($SID_s = SID_r$)
- Network identification ($NID_s = NID_r$)
- Search window size for the Active Set and the Candidate Set ($SRCH\_WIN\_A_s = SRCH\_WIN\_A_r$)
- Search window size for the Neighbor Set ($SRCH\_WIN\_N_s = SRCH\_WIN\_N_r$)
- Search window size for the Remaining Set ($SRCH\_WIN\_R_s = SRCH\_WIN\_R_r$)
- Pilot detection threshold ($T\_ADD_s = T\_ADD_r$)
- Pilot drop threshold ($T\_DROP_s = T\_DROP_r$)
- Active Set versus Candidate Set comparison threshold ($T\_COMP_s = T\_COMP_r$)
- Drop timer value ($T\_TDROP_s = T\_TDROP_r$)
- Drop timer range value ($T\_TDROP\_RANGE_s = T\_TDROP\_RANGE_r$) if $T\_TDROP\_RANGE\_INCL_r$ is equal to '1'; otherwise, ($T\_TDROP\_RANGE_s$ = '0000')
- Forward Packet Data Channel supported indicator ($FOR\_PDCH\_SUPPORTED_s = FOR\_PDCH\_SUPPORTED_r$)
- Short Data Burst supported indicator ($SDB\_SUPPORTED_s = SDB\_SUPPORTED_r$)
- If included, permission for the mobile station to request QoS settings in the *Origination Message*, *Origination Continuation Message*, or *Enhanced Origination Message* ($MOB\_QOS_s = MOB\_QOS_r$)
- Mobile station initiated position location determination supported indicator ($MS\_INIT\_POS\_LOC\_SUP\_IND_s = MS\_INIT\_POS\_LOC\_SUP\_IND_r$).
- PDCH Control Hold Mode supported indicator ($PDCH\_CHM\_SUPPORTED_s = PDCH\_CHM\_SUPPORTED_r$) if included; otherwise, set $PDCH\_CHM\_SUPPORTED_s$ to ‘0’.
- Reverse Packet Data Channel supported indicator ($REV\_PDCH\_SUPPORTED_s = REV\_PDCH\_SUPPORTED_r$) if included; otherwise, set $REV\_PDCH\_SUPPORTED_s$ to ‘0’.
- Channel configuration request allowed indicator ($USE\_CH\_CFG\_RRM_s = USE\_CH\_CFG\_RRM_r$) if included; otherwise, set $USE\_CH\_CFG\_RRM_s$ to ‘0’.

- Maximum age for retention of Neighbor Set members ($NGHBR\_MAX\_AGE_s = NGHBR\_MAX\_AGE_r$)
- Protocol revision level ($P\_REV_s = P\_REV_r$), and protocol revision level currently in use ($P\_REV\_IN\_USE_s$ = min (P_REV_s, $MOB\_P\_REV_p$ of the current band class))
- Slope of the handoff add/drop criterion ($SOFT\_SLOPE_s = SOFT\_SLOPE_r$)
- Intercept of the handoff add criterion ($ADD\_INTERCEPT_s = ADD\_INTERCEPT_r$)
- Intercept of the handoff drop criterion ($DROP\_INTERCEPT_s = DROP\_INTERCEPT_r$)
- If included, neighbor pilot strength measurement threshold offset ($T\_MULCHAN_s = T\_MULCHAN_r$)
- If included, Reverse Supplemental Code Channel beginning of transmission preamble length ($BEGIN\_PREAMBLE_s = BEGIN\_PREAMBLE_r$)
- If included, Reverse Supplemental Code Channel discontinuous transmission resumption preamble length ($RESUME\_PREAMBLE_s = RESUME\_PREAMBLE_r$)
- If included, Slotted Timer ($T\_SLOTTED_s = T\_SLOTTED_r$)
- If the mobile station supports packet data service options, the mobile station shall store the packet data services zone identifier ($PACKET\_ZONE\_ID_s = PACKET\_ZONE\_ID_r$).
- If the mobile station supports packet data service options and the PZ_HYST_ENABLED field is included, the mobile station shall store the packet zone hysteresis enabled indicator ($PZ\_HYST\_ENABLED_s = PZ\_HYST\_ENABLED_r$); otherwise, the mobile station shall set $PZ\_HYST\_ENABLED_s$ to ‘1’.
- If the PZ_HYST_LIST_LEN field is included, the mobile station shall store the packet zone hysteresis list length (PZ_HYST_LIST_LENs = PZ_HYST_LIST_LENr); otherwise, the mobile station shall set PZ_HYST_LIST_LENs to 4.
- If the PZ_HYST_ACT_TIMER field is included, the mobile station shall store the packet zone hysteresis activation timer (PZ_HYST_ACT_TIMERs = PZ_HYST_ACT_TIMERr); otherwise, the mobile station shall set PZ_HYST_ACT_TIMERs to 30 seconds.
- If the PZ_HYST_TIMER_MUL field and the PZ_HYST_TIMER_EXP field are included, the mobile station shall store the packet zone hysteresis timer (PZ_HYST_TIMERs = PZ_HYST_TIMER_MULr × 8 ^ PZ_HYST_TIMER_EXPr); otherwise, the mobile station shall set PZ_HYST_TIMERs to 60 seconds.
- If $ENC\_SUPPORTED_r$ is equal to ‘1’, the mobile station shall store:
  - Signaling encryption supported indicator ($SIG\_ENCRYPT\_SUP_s = SIG\_ENCRYPT\_SUP_r$)
  - User information encryption supported indicator ($UI\_ENCRYPT\_SUP_s = UI\_ENCRYPT\_SUP_r$)
- Concurrent services supported indicator ($CS\_SUPPORTED_s = CS\_SUPPORTED_r$).

- Maximum number of additional service reference identifiers allowed in origination (MAX_ADD_SERV_INSTANCEs = MAX_ADD_SERV_INSTANCEr), if included; otherwise, the mobile station shall set MAX_ADD_SERV_INSTANCEs to 0.
- Control Hold Mode supported indicator ($CHM\_SUPPORTED_s$ = $CHM\_SUPPORTED_r$) if included; otherwise, the mobile station shall perform the following:
  - If $P\_REV\_IN\_USE_s$ is less than six, set $CHM\_SUPPORTED_s$ to '0'.
  - Otherwise, set $CHM\_SUPPORTED_s$ to '1'.
- CDMA off time report supported indicator ($CDMA\_OFF\_TIME\_REP\_SUP\_IND_s$ = $CDMA\_OFF\_TIME\_REP\_SUP\_IND_r$).
- If $CDMA\_OFF\_TIME\_REP\_SUP\_IND_r$ is equal to '1', the mobile station shall store CDMA off time report threshold ($CDMA\_OFF\_TIME\_REP\_THRESHOLD_s$ = $CDMA\_OFF\_TIME\_REP\_THRESHOLD_r$ in units specified by $CDMA\_OFF\_TIME\_REP\_UNIT_r$).
- The mobile station shall set $BCMC\_ON\_TRAFFIC\_SUP_s$ to $BCMC\_ON\_TRAFFIC\_SUP_r$. If $BCMC\_ON\_TRAFFIC\_SUP_r$ is set to '1', the mobile station shall store $AUTO\_REQ\_TRAF\_ALLOWED\_IND_s$ = $AUTO\_REQ\_TRAF\_ALLOWED\_IND_r$.

The mobile station shall determine its roaming status (see 2.6.5.3). The mobile station should indicate to the user whether the mobile station is roaming.

2.6.4.1.5 Message Action Times

A Forward Traffic Channel message without a USE_TIME field or with a USE_TIME field set to '0' has an implicit action time. A message that has its USE_TIME field set to '1' has an explicit action time that is specified in the ACTION_TIME field of the message.

A message with an explicit action time is called a pending message.

Unless otherwise specified, a message having an implicit action time shall take effect no later than the first 80 ms boundary (relative to System Time plus $FRAME\_OFFSET_s \times 1.25$ ms) occurring at least 80 ms after the end of the frame containing the last bit of the message. A message with an explicit action time, except for a *Power Up Function Message*, shall take effect when System Time minus $FRAME\_OFFSET_s \times 1.25$ ms (in 80 ms units) modulo 64 becomes equal to the message's ACTION_TIME field. A *Power Up Function Message* shall take effect ACTION_TIME_FRAME frames after the time when System Time minus $FRAME\_OFFSET_s \times 1.25$ ms (in 80 ms units) modulo 64 becomes equal to the message's ACTION_TIME field. The difference in time between ACTION_TIME and the end of the frame containing the last bit of the message shall be at least 80 ms.

The mobile station shall support two pending messages at any given time, not including pending *Service Option Control Orders* or *Service Option Control Messages*. The number of pending *Service Option Control Orders* or *Service Option Control Messages* that the mobile station is required to support is specific to the service option (see the relevant service option description). In addition, the mobile station shall support one pending *Power Up Function Message*.

2.6.4.1.6 Long Code Transition Request Processing

The mobile station performs these procedures upon receiving a *Long Code Transition Request Order*.

If the *Long Code Transition Request Order* requests a transition to the private long code, and the mobile station is able to generate the private long code (see 2.3.12.3), and the mobile station accepts the request, the mobile station shall send a *Long Code Transition Response Order* (ORDQ = '00000011') within T_{56m} seconds. The mobile station shall use the private long code on both the Forward Traffic Channel and the Reverse Traffic Channel. The mobile station shall store the public long code mask and $PLCM\_TYPE_S$ currently in use and begin using the private long code at the explicit action time (see 2.6.4.1.5) specified in the message. At the action time of the message, the mobile station should indicate to the user that the voice privacy mode is active. If the *Long Code Transition Request Order* requests a private long code transition, and the mobile station is not able to generate the private long code or the mobile station does not accept the request, the mobile station shall send a *Long Code Transition Response Order* (ORDQ = '00000010') within T_{56m} seconds.

If the *Long Code Transition Request Order* requests a transition to the public long code and the mobile station accepts the request, the mobile station shall send a *Long Code Transition Response Order* (ORDQ = '00000010') within T_{56m} seconds. The mobile station shall use the public long code on both the Forward Traffic Channel and the Reverse Traffic Channel. The mobile station shall begin using the public long code that is stored previously, derived from $PLCM\_TYPE_S$ as specified in 2.3.6, at the explicit action time (see 2.6.4.1.5) specified in the message. At the action time of the message, the mobile station should indicate to the user that the voice privacy mode is inactive. If the *Long Code Transition Request Order* requests a public long code transition, and the mobile station does not accept the request, the mobile station shall send a *Long Code Transition Response Order* (ORDQ = '00000011') within T_{56m} seconds.

2.6.4.1.7 Power Up Function (PUF)

Figure 2.6.4.1.7-1 illustrates the general structure of a PUF attempt. A PUF pulse is the interval during which the mobile station transmits at the specified power level while executing the Power Up Function.

A PUF probe is one or more consecutive Traffic Channel frames. A PUF probe consists of three parts: PUF setup, PUF pulse, and PUF recovery. PUF_SETUP_SIZE is the duration of the PUF setup part, in power control groups. PUF_PULSE_SIZE is the duration of the PUF pulse, in power control groups. The PUF recovery period occupies the remainder of the last frame of the PUF probe.

A PUF attempt is a sequence of PUF probes sent by the mobile station in response to a *Power Up Function Message*. A PUF attempt begins at an offset frame boundary within 80 ms of the ACTION_TIME specified in the *Power Up Function Message*. A PUF attempt can be terminated in one of four ways:

- The mobile station receives a *Power Up Function Completion Message*.

- The mobile station has transmitted the maximum number of PUF probes specified in the *Power Up Function Message*.
- The mobile station has transmitted the maximum number of probes allowed at its maximum output power.
- The mobile station receives a new *Power Up Function Message*.

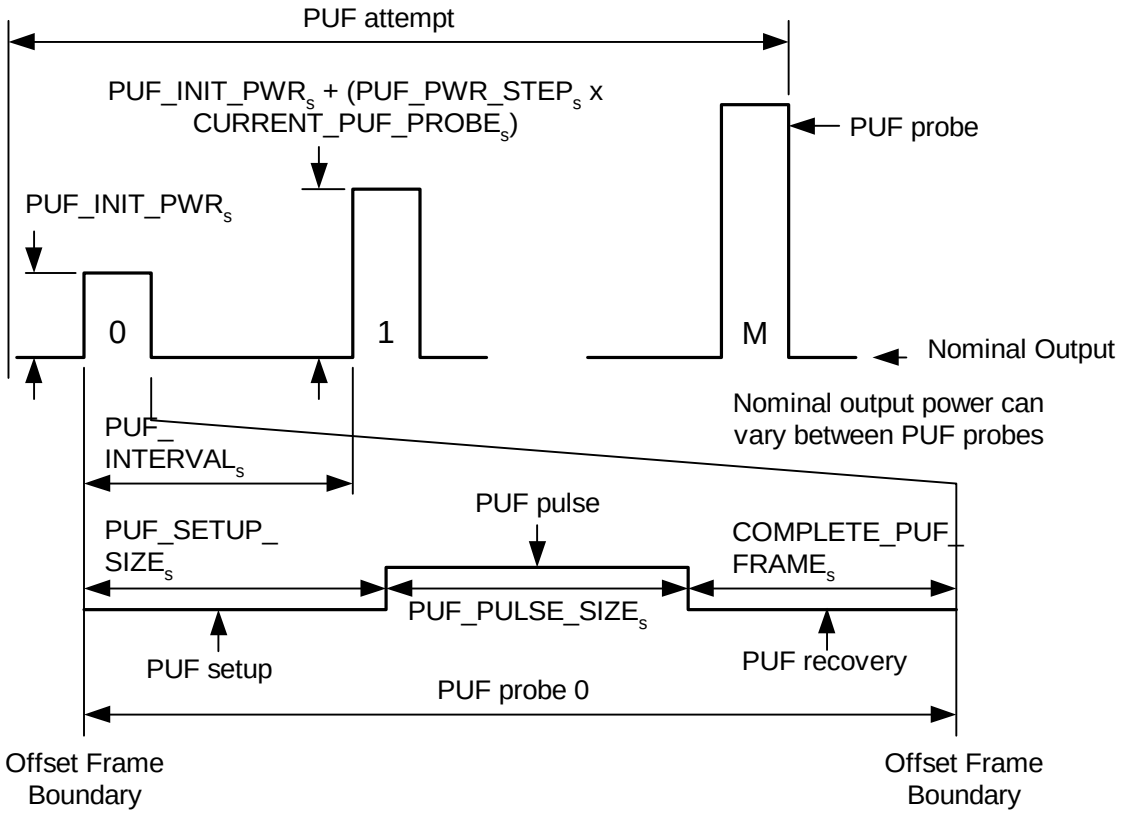

Figure 2.6.4.1.7-1. Structure of PUF Attempt

2.6.4.1.7.1 Processing the Power Up Function Message

The mobile station shall send a *Mobile Station Reject Order* with the ORDQ field set to '00000110' (message requires a capability that is not supported by the mobile station) if any of the following conditions are detected:

- PUF_FREQ_INCL$_r$ is set to '1' and PUF_BAND_CLASS$_r$ is not supported by the mobile station.
- PUF_FREQ_INCL$_r$ is set to '1' and the mobile station is unable to re-tune to the PUF Target Frequency during (PUF_SETUP_SIZE$_r$ + 1) power control groups.
- MOB_P_REV$_p$ is not equal to five and the mobile station does not support the Power Up Function.

The mobile station shall send a *Mobile Station Reject Order* with the ORDQ field set to '00001100' (invalid Frequency Assignment), if the Frequency Assignment specified in the message is the same as the Serving Frequency ($PUF\_FREQ\_INCL_r$ is equal to '1', $PUF\_BAND\_CLASS_r$ is equal to $CDMABAND_s$ and $PUF\_CDMA\_FREQ_r$ is equal to $CDMACH_s$).

If the mobile station is processing a PUF probe, the mobile station shall wait for the PUF probe to complete. It shall then terminate the current PUF attempt. The mobile station shall store the following parameters:

- Maximum number of PUF probes transmitted at full power level ($MAX\_PWR\_PUF_s = MAX\_PWR\_PUF_r + 1$)
- Total number of PUF probes ($TOTAL\_PUF\_PROBES_s = TOTAL\_PUF\_PROBES_r + 1$)
- PUF interval ($PUF\_INTERVAL_s = PUF\_INTERVAL_r$)
- Number of PUF setup power control groups ($PUF\_SETUP\_SIZE_s = PUF\_SETUP\_SIZE_r + 1$)
- Number of PUF pulse power control groups ($PUF\_PULSE\_SIZE_s = PUF\_PULSE\_SIZE_r +1$)
- Power increase of initial PUF pulse ($PUF\_INIT\_PWR_s = PUF\_INIT\_PWR_r$)
- Power increase for each successive PUF pulse ($PUF\_PWR\_STEP_s = PUF\_PWR\_STEP_r$)
- Frequency included indicator ($PUF\_FREQ\_INCL_s = PUF\_FREQ\_INCL_r$)

If $PUF\_FREQ\_INCL_s$ equals '1', the mobile station shall store the following:

- PUF probe Target Frequency CDMA Channel number ($PUF\_TF\_CDMACH_s = PUF\_CDMA\_FREQ_r$)
- PUF probe Target Frequency CDMA band class ($PUF\_TF\_CDMABAND_s = PUF\_BAND\_CLASS_r$)

The mobile station shall set $CURRENT\_PUF\_PROBE_s$ equal to 0.

The mobile station shall then begin the PUF attempt at the time specified in 2.6.4.1.7.2.

2.6.4.1.7.2 Power Up Function Procedures

The mobile station shall process the initial PUF probe beginning at the start of the frame which starts $ACTION\_TIME\_FRAME_r \times 20$ ms + $FRAME\_OFFSET_s \times 1.25$ ms after the System Time specified by $ACTION\_TIME_r$. The mobile station shall process additional PUF probes beginning at intervals of $PUF\_INTERVAL_s$ frames from the beginning of the initial PUF probe.

The mobile station shall transmit the PUF probes as described in 2.6.4.1.7.2.1 and 2.6.4.1.7.2.2.

2.6.4.1.7.2.1 PUF Probe On Serving Frequency

The mobile station shall process each PUF probe as follows:

- The mobile station shall use closed loop power control procedures as specified in [2].
- The mobile station shall use the gated output procedures specified in [2].
- The mobile station shall control its mean output power as specified in [2].
- The mobile station shall monitor its output power during the PUF pulse, and should monitor its output power at least once during each power control group of the PUF pulse. If the mobile station detects that the transmit power level specified in [2] is equal to or greater than the maximum power output of the mobile station at any time during a PUF pulse, the mobile station shall decrement $MAX\_PWR\_PUF_S$ by one for that PUF pulse.
- The mobile station shall transmit the traffic channel preamble for the duration of the PUF probe on the Reverse Fundamental Channel.

After the processing of each PUF probe, the mobile station shall increment $CURRENT\_PUF\_PROBE_S$ by 1. If $MAX\_PWR\_PUF_S$ is equal to 0, the mobile station shall terminate the PUF attempt. If $CURRENT\_PUF\_PROBE_S$ equal to $TOTAL\_PUF\_PROBE_S$, the mobile station shall terminate the PUF attempt.

2.6.4.1.7.2.2 PUF Probe On PUF Target Frequency

The mobile station shall process each PUF probe as follows:

- The mobile station shall use closed loop power control procedures as specified in [2].
- The mobile station shall use the gated output procedures specified in [2].
- The mobile station shall control its mean output power as specified in [2].
- The mobile station shall store the following Serving Frequency parameters from its current configuration:
  - CDMA Band Class ($PUF\_SF\_CDMABAND_S = CDMABAND_S$)
  - Frequency assignment ($PUF\_SF\_CDMACH_S = CDMACH_S$)
- The mobile station shall monitor its output power during the PUF pulse, and should monitor its output power at least once during each power control group of PUF pulse. If the mobile station detects that the transmit power level specified in [2] is equal to or greater than the maximum power output of the mobile station at any time during a PUF pulse, the mobile station shall decrement the $MAX\_PWR\_PUF_S$ by one for that PUF pulse.
- At the beginning of the PUF probe, the mobile station shall disable its transmitter, stop processing the Forward Supplemental Code Channel (if any), or the Forward Supplemental Channel (if any), disable all corrections to the mobile station time reference (see [2]), tune to the CDMA channel specified by $PUF\_TF\_CDMACH_S$, and $PUF\_TF\_CDMABAND_S$ and re-enable its transmitter.
- The mobile station shall transmit the traffic channel preamble on the Reverse Fundamental Channel during the PUF pulse at $PUF\_TX\_PWR_S$.

- The mobile station should disable its transmitter immediately after the end of the PUF pulse, and shall disable its transmitter before the end of the first power control group after the PUF pulse. It shall then tune to its assigned CDMA channel as given by $CDMACH_s$ and $CDMABAND_s$.
- If the interval between the time that the mobile station tunes to the PUF Target Frequency and the time that it re-tunes to the Serving Frequency is equal to or greater than ($N_{2m} \times 0.02$) seconds, the mobile station shall wait to receive a period of ($N_{3m} \times 20$) ms with sufficient signal quality on the physical channel corresponding to $FPC\_PRI\_CHAN_s$.
- The mobile station shall then re-enable its transmitter and re-enable any adjustments to the mobile station time reference.
- If the Forward Supplemental Code Channel assignment has not expired while the mobile station has tuned to the PUF Target Frequency, then the mobile station shall resume processing the Forward Supplemental Code Channels after re-tuning to the Serving Frequency.
- If the Forward Supplemental Channel assignment has not expired while the mobile station has tuned to the PUF Target Frequency, then the mobile station shall resume processing the Forward Supplemental Channels after re-tuning to the Serving Frequency.
- If the Reverse Supplemental Code Channel assignment has not expired while the mobile station has tuned to the PUF Target Frequency, then the mobile station may resume transmitting the Reverse Supplemental Code Channels after re-tuning to the Serving Frequency.
- If the Reverse Supplemental Channel assignment has not expired while the mobile station has tuned to the PUF Target Frequency, then the mobile station may resume transmitting the Reverse Supplemental Code Channels after re-tuning to the Serving Frequency.

After the processing of each PUF probe, the mobile station shall increment $CURRENT\_PUF\_PROBE_s$ by one. If $MAX\_PWR\_PUF_s$ is equal to 0, the mobile station shall terminate the PUF attempt. If $CURRENT\_PUF\_PROBE_s$ is equal to $TOTAL\_PUF\_PROBE_s$, the mobile station shall terminate the PUF attempt.

2.6.4.1.7.3 Processing the Power Up Function Completion Message

The mobile station shall terminate any PUF attempt no later than the completion of the current probe in progress and shall discard any pending *Power Up Function Message*. If LOC_IND_r is equal to '1', the mobile station may store the following parameters:

- Mobile Station Latitude ($MS\_LAT_s = MS\_LAT_r$)
- Mobile Station Longitude ($MS\_LONG_s = MS\_LONG_r$)
- Time stamp ($MS\_LOC\_TSTAMP_s = MS\_LOC\_TSTAMP_r$)

2.6.4.1.8 Forward Traffic Channel Supervision

When in the *Mobile Station Control on the Traffic Channel State*, the mobile station shall continuously monitor the Forward Channel, except:

- During a PUF probe in which it transmits on a PUF target frequency (see 2.6.4.1.7),
- During a search of pilots on a CDMA Candidate Frequency (see 2.6.6.2.8.3),

When a Forward Common Power Control Channel is not assigned, the mobile station shall perform the procedure described in 2.6.4.1.8.1. When a Forward Forward Common Power Control Channel is assigned, the mobile station shall perform the procedure described in 2.6.4.1.8.2.

2.6.4.1.8.1 Forward Traffic Channel Supervision when a Forward Common Power Control Channel is not assigned

The mobile station shall monitor the physical channel corresponding to $FPC\_PRI\_CHAN_S$ as follows:

- If $RESQ\_ENABLED_S$ is equal to '1' and $FPC\_PRI\_CHAN_S$ is equal to '0', the mobile station shall perform the following:
  - While the mobile station's transmitter is enabled:
    - If the rescue attempt timer is not enabled and the mobile station detects a 'forward link error' trigger as specified in 2.6.4.1.8.1.1, then the mobile station shall perform the following:
      - disable its transmitter, and
      - enable the rescue delay timer with an initial value of ($RESQ\_DELAY\_TIME_S \times 80$) ms.
    - If the rescue attempt timer is enabled and the mobile station detects a 'good forward link' trigger as specified in 2.6.4.1.8.1.1, then the mobile station shall disable the rescue attempt timer, and shall resume Forward and Reverse Traffic Channel power control as specified in 2.6.4.1.1 and 2.6.6.2.7.2, respectively.
  - While the mobile station's transmitter is disabled:
    - If the mobile station did not disable its transmitter due to an acknowledgment failure and the mobile station detects a 'good forward link' trigger as specified in 2.6.4.1.8.1.1, then the mobile station should re-enable its transmitter, and shall also perform the following:
      - disable the rescue delay timer or rescue allowed timer, if either is enabled.
      - send a *Call Rescue Cancel Order* in assured mode, if the mobile station is not otherwise required to send an *Extended Pilot Strength Measurement Message*.
- Otherwise, the mobile station shall perform the following:

- If the mobile station detects a 'forward link error' trigger as specified in 2.6.4.1.8.1.1, it shall disable its transmitter.
- Thereafter, if the mobile station detects a 'good forward link' trigger as specified in 2.6.4.1.8.1.1, then the mobile station should re-enable its transmitter.

The mobile station shall establish a Forward Traffic Channel fade timer. The timer shall be enabled when the mobile station first enables its transmitter when in the *Traffic Channel Initialization Substate* of the *Mobile Station Control on the Traffic Channel State*. The fade timer shall be reset for T_{5m} seconds whenever the mobile station detects a 'good forward link' trigger as specified in 2.6.4.1.8.1.1. The mobile station shall disable the fade timer when it tunes to a PUF target frequency, and shall re-enable the fade timer at the end of the PUF probe. If the timer expires, the mobile station shall disable its transmitter and declare a loss of the Forward Traffic Channel. If $CRRM\_MSG\_IND_S$ equals '1' and if no other access channel message is transmitted after loss of the Forward Traffic Channel, the mobile station may enter the *Update Overhead Information Substate* of the *System Access State* (see 2.6.3) with an origination indication, within 20 seconds of the loss of the Forward Traffic Channel, to transmit the *Call Recovery Request Message*.

The mobile station also enables, disables, and resets the fade timer as described in 2.6.6.2.8 and 2.6.6.2.10 when it performs a hard handoff or a periodic search.

2.6.4.1.8.1.1 Triggers

The mobile station shall detect 'good forward link' trigger as specified below:

- If RC11 or RC12 is used on Forward Link and blanking is enabled (i.e. FOR_FCH_BLANKING_DUTYCYCLE is set to value other than '000'), then the mobile station shall detect 'good forward link' trigger when any one of the following condition is met:
  - Mobile station receives a period of ($N_{3m} \times 20$) ms with sufficient signal quality on the physical channel corresponding to $FPC\_PRI\_CHAN_S$.
  - Mobile station receives a N_{3m} consecutive guaranteed transmission frames with sufficient signal quality on the physical channel corresponding to $FPC\_PRI\_CHAN_S$.
- Otherwise, the mobile station shall detect 'good forward link' trigger when it receives a period of ($N_{3m} \times 20$) ms with sufficient signal quality on the physical channel corresponding to $FPC\_PRI\_CHAN_S$.

The mobile station shall detect 'forward link error' trigger as specified below:

- If RC11 or RC12 is used on Forward Link and blanking is enabled (i.e. FOR_FCH_BLANKING_DUTYCYCLE is set to value other than '000'), then the mobile station shall detect 'forward link error' trigger when it receives $FOR\_N2M\_IND_S$ consecutive guaranteed transmission frames with insufficient signal quality on the physical channel corresponding to $FPC\_PRI\_CHAN_S$.

- Otherwise, the mobile station shall detect 'forward link error' trigger when it receives a period of ($N_{2m} \times 20$) ms with insufficient signal quality on the physical channel corresponding to $FPC\_PRI\_CHAN_S$.

2.6.4.1.8.2 Forward Traffic Channel Supervision when a Forward Common Power Control Channel is assigned

The mobile station shall monitor the Forward Common Power Control Channel as follows:

- If the mobile station receives a period of ($N_{16m} \times 1.25$) ms with insufficient signal quality on the Forward Common Power Control Subchannels assigned to this mobile, it shall disable its transmitter.
- Thereafter, if the mobile station receives a period of ($N_{17m} \times 1.25$) ms with sufficient signal quality on the Forward Common Power Control Subchannels assigned to this mobile, then the mobile station should re-enable its transmitter.

The mobile station shall establish a Forward Traffic Channel fade timer. The timer shall be enabled when the mobile station first enables its transmitter when in the *Traffic Channel Initialization Substate* of the *Mobile Station Control on the Traffic Channel State*. The fade timer shall be reset for T_{5m} seconds whenever the mobile station receives a period of ($N_{17m} \times 1.25$) ms with sufficient signal quality on the Forward Common Power Control Subchannels assigned to this mobile. If the timer expires, the mobile station shall disable its transmitter and declare a loss of the Forward Traffic Channel. If $CRRM\_MSG\_IND_S$ equals '1' and if no other access channel message is transmitted after loss of the Forward Traffic Channel, the mobile station may enter the *Update Overhead Information Substate* of the *System Access State* (see 2.6.3) with an origination indication, within 20 seconds of the loss of the Forward Traffic Channel, to transmit the *Call Recovery Request Message*.

The mobile station also enables, disables, and resets the fade timer as described in 2.6.6.2.7, 2.6.6.2.8 and 2.6.6.2.10 when it performs a soft handoff, a hard handoff or a periodic search.

Additionally, the mobile station shall perform a ping as follows:

- The mobile station shall establish a Forward Traffic Channel ping timer as follows:
  - When the mobile station first enables its transmitter in the *Traffic Channel Initialization Substate* of the *Mobile Station Control on the Traffic Channel State*, the mobile station shall enable the Forward Traffic Channel ping timer and set it to T_{78m} seconds.
  - When the mobile station receives a message that assigns a F-CPCCH, the mobile station shall enable the Forward Traffic Channel ping timer and set it to T_{78m} seconds.
- When the mobile station receives a Physical Layer SDU destined for this mobile station on the F-PDCH or on the shared F-DCCH (See [3]), the Forward Traffic Channel ping timer shall be reset for T_{78m} seconds.

- When the Forward Traffic Channel ping timer expires, the mobile station shall send a *L2 Acknowledgment Order* in assured mode if there is no other Layer 3 message to be sent in assured mode available for transmission.

2.6.4.1.9 Processing the Extended Release Message and the Extended Release Mini Message

- Upon receiving the *Extended Release Message* or the *Extended Release Mini Message*, the mobile station shall process the message as follows:
  - If $USE\_EXT\_CH\_IND_r$ is equal to '1', then the mobile station shall set $USE\_EXT\_CH\_IND_s$ to $USE\_EXT\_CH\_IND_r$; otherwise, the mobile station shall set $USE\_EXT\_CH\_IND_s$ to '0'.
  - If the mobile station determines that the configuration specified by CH_IND_r or $EXT\_CH\_IND_r$ is not valid (see Tables 3.7.3.3.2.34-1, and 3.7.3.3.2.34-3), the mobile station shall send a *Mobile Station Reject Order* with the ORDQ field set to '00000111' (message can not be handled by the current mobile station configuration) and the mobile station shall not perform the remaining procedures in this section.
  - If $USE\_EXT\_CH\_IND_s$ is equal to '0' and CH_IND_r is equal to '111' or the physical channels indicated by the two least significant bits of CH_IND_r includes all the physical channels (FCH, DCCH, or both) currently being processed by the mobile station, the Layer 3 shall send a "release indication" to all Call Control instances and shall perform the following:
    - The mobile station shall set $TBR\_RAND\_SUPPR\_ENABLE_s$ = $TBR\_RAND\_SUPPR\_ENABLE_r$.
    - The mobile station shall set $TBR\_RAND\_WINDOW_s$ to $TBR\_RAND\_WINDOW_r$.
    - Enter the *Release Substate* with a base station extended release indication if the message is the *Extended Release Message*.
    - Enter the *Release Substate* with a base station extended release mini message indication if the message is the *Extended Release Mini Message*.
  - Otherwise, the mobile station shall perform the following:
    - If the received message is the *Extended Release Message*, the mobile station shall send an *Extended Release Response Message* to the base station. If the received message is the *Extended Release Mini Message*, the mobile station shall send an *Extended Release Response Mini Message* to the base station.
    - If $USE\_EXT\_CH\_IND_s$ is equal to '1', then the mobile station shall perform the following:
      - If $SWITCHING\_PARMS\_INCL_r$ is included and equal to '1', the mobile station shall set $NUM\_SOFT\_SWITCHING\_FRAMES\_CHM_s$ to $NUM\_SOFT\_SWITCHING\_FRAMES\_CHM_r + 1$, and

NUM_SOFTER_SWITCHING_FRAMES_CHM$_s$ to NUM_SOFTER_SWITCHING_FRAMES_CHM$_r$ + 1.

- o If EXT_CH_IND$_r$ indicates that F-DCCH is assigned and F-FCH is not assigned, the mobile station shall set FPC_PRI_CHAN$_s$ to '1' at the action time of the message.
- o If EXT_CH_IND$_r$ indicates that F-FCH is assigned and F-DCCH is not assigned, the mobile station shall set FPC_PRI_CHAN$_s$ to '0' at the action time of the message.
- o If EXT_CH_IND$_r$ indicates that an R-FCH is to be released, then the mobile station shall stop transmitting on R-FCH at the action time specified by the message. If EXT_CH_IND$_r$ indicates that an F-FCH is to be released, then the mobile station shall stop processing F-FCH at the action time specified by the message.
- o If EXT_CH_IND$_r$ indicates that an R-DCCH is to be released, then the mobile station shall stop transmitting on R-DCCH at the action time specified by the message. If EXT_CH_IND$_r$ indicates that an F-DCCH is to be released, then the mobile station shall stop processing F-DCCH at the action time specified by the message.
- o If EXT_CH_IND$_r$ indicates that an R-PDCH is to be released, then the mobile station shall stop transmitting on R-PDCH at the action time specified by the message.
- o If GATING_RATE_INCL$_r$ is equal to '1', the mobile station shall set PILOT_GATING_RATE$_s$ = PILOT_GATING_RATE$_r$ at the action time of the message.
- o If PDCH_CONTROL_HOLD$_r$ is equal to '1', the mobile station shall perform the following:
  - ◊ Set PILOT_GATING_USE_RATE to '1' and start the reverse pilot gating and R-CQICH gating at PILOT_GATING_RATE$_s$ at the action time of the message.
  - ◊ The mobile station shall cancel the forward and reverse supplemental channel assignment, if any, at the action time of the message.
- o The mobile station shall set EXT_CH_IND$_s$ to EXT_CH_IND$_r$.

+ Otherwise (USE_EXT_CH_IND$_s$ is equal to '0'), the mobile station shall perform the following:

- o The mobile station shall update CH_IND$_s$ as follows: If the least

significant bit of CH_IND_r equals '1', the mobile station shall set CH_IND_s = '10'. If the second most significant bit of CH_IND_r equals '1', the mobile station shall set CH_IND_s = '01'.

- If CH_IND_r is equal to '001' or '101', the mobile station shall set $FPC\_PRI\_CHAN_s$ to '1' at the action time of the message.
- If CH_IND_r is equal to '010', the mobile station shall set $FPC\_PRI\_CHAN_s$ to '0' at the action time of the message.
- If the least significant bit of CH_IND_r equals '1', then the mobile station shall stop transmitting on R-FCH and stop processing F-FCH, if assigned, at the action time specified by the message.
- If the second most significant bit of CH_IND_r equals '1', then the mobile station shall stop transmitting on R-DCCH and stop processing F-DCCH, if assigned, at the action time specified by the message.
- If $GATING\_RATE\_INCL_r$ equals '1', the mobile station shall set $PILOT\_GATING\_RATE_s$ = $PILOT\_GATING\_RATE_r$ at the action time of the message.
- If the most significant bit of CH_IND_r equals '1', the mobile station shall set PILOT_GATING_USE_RATE to '1'. The mobile station shall start the reverse pilot gating at $PILOT\_GATING\_RATE_s$ at the action time of the message. Furthermore, if the least significant bit of CH_IND_r equals '1' (that is, the Fundamental Channel is being released), the mobile station shall store the configuration used for the Fundamental Channel. The mobile station shall cancel the forward and reverse supplemental channel assignment, if any, at the action time of the message.
- If a Forward Packet Data Channel is assigned, the mobile station shall perform the following:
  - ◊ Stop processing the Forward Packet Data Channel at the action time specified by the message.
  - ◊ If a Reverse Packet Data Channel is assigned, the mobile station shall stop transmitting on the Reverse Packet Data Channel at the action time specified by the message.
  - ◊ If the two least significant bits of CH_IND_r is equal to '00', the mobile station shall perform the following:
    - – If $EXT\_CH\_IND_s$ signals the allocation of F-FCH and R-FCH, and does not signal allocation of F-DCCH nor R-DCCH, the mobile station shall set CH_IND_s = '01' at the action time specified by the message.

– If $EXT\_CH\_IND_S$ signals the allocation of F-DCCH and R-DCCH, and does not signal allocation of F-FCH nor R-FCH, the mobile station shall set CH_IND_S = '10' at the action time specified by the message.

– If $EXT\_CH\_IND_S$ signals the allocation of F-FCH, R-FCH, F-DCCH and R-DCCH, the mobile station shall set CH_IND_S = '11' at the action time specified by the message.

2.6.4.1.10 Processing the Resource Allocation Message and Resource Allocation Mini Message

The mobile station shall process the *Resource Allocation Message* and the *Resource Allocation Mini Message* as follows:

- The mobile station shall set $FPC\_PRI\_CHAN_S$ = $FPC\_PRI\_CHAN_r$ at the action time of the message.
- If a F-PDCH is not assigned and the Fundamental Channel was previously established prior to transitioning to the *Control Hold Mode*, the mobile station shall start processing F-FCH and start transmitting on R-FCH at the action time of the message. The mobile station shall establish the Fundamental Channel with the same configuration as previously used, and shall set CH_IND_S to '11'.
- The mobile station shall set PILOT_GATING_USE_RATE to '0' and shall start the continuous reverse pilot at the action time of the message and, if a F-PDCH is assigned, the mobile station shall start the continuous R-CQICH as defined in [3].

2.6.4.1.11 Reserved

2.6.4.1.12 Processing the Service Configuration Record

The mobile station shall update the Service Configuration information record currently in use as follows:

- If $P\_REV\_IN\_USE_S$ is less than eight, the mobile station shall update the multiplex option information as follows:
  - The mobile station shall store the forward Fundamental Channel multiplex option [$FOR\_FCH\_MUX\_OPTION_S$ = $FOR\_MUX\_OPTION_r$].
  - The mobile station shall store the reverse Fundamental Channel multiplex option [$REV\_FCH\_MUX\_OPTION_S$ = $REV\_MUX\_OPTION_r$].
  - The mobile station shall store the forward Dedicated Control Channel multiplex option [$FOR\_DCCH\_MUX\_OPTION_S$ = $FOR\_MUX\_OPTION_r$].
  - The mobile station shall store the reverse Dedicated Control Channel multiplex option [$REV\_DCCH\_MUX\_OPTION_S$ = $REV\_MUX\_OPTION_r$].
- If $P\_REV\_IN\_USE_S$ is greater than or equal to eight, the mobile station shall update the multiplex option information as follows:

- If FCH_DCCH_MUX_OPTION_IND is equal to '00':
  - The mobile station shall store the forward Fundamental Channel multiplex option ($FOR\_FCH\_MUX\_OPTION_s = FOR\_MUX\_OPTION_r$).
  - The mobile station shall store the forward Dedicated Control Channel multiplex option ($FOR\_DCCH\_MUX\_OPTION_s = FOR\_MUX\_OPTION_r$).
  - The mobile station shall store the reverse Fundamental Channel multiplex option ($REV\_FCH\_MUX\_OPTION_s = REV\_MUX\_OPTION_r$).
  - The mobile station shall store the reverse Dedicated Control Channel multiplex option ($REV\_DCCH\_MUX\_OPTION_s = REV\_MUX\_OPTION_r$).
- If FCH_DCCH_MUX_OPTION_IND is equal to '01':
  - The mobile station shall store the forward Fundamental Channel multiplex option ($FOR\_FCH\_MUX\_OPTION_s = FOR\_MUX\_OPTION_r$).
  - The mobile station shall store the reverse Fundamental Channel multiplex option ($REV\_FCH\_MUX\_OPTION_s = REV\_MUX\_OPTION_r$).
- If FCH_DCCH_MUX_OPTION_IND is equal to '10':
  - The mobile station shall store the forward Dedicated Control Channel multiplex option ($FOR\_DCCH\_MUX\_OPTION_s = FOR\_MUX\_OPTION_r$).
  - The mobile station shall store the reverse Dedicated Control Channel multiplex option ($REV\_DCCH\_MUX\_OPTION_s = REV\_MUX\_OPTION_r$).
- If FCH_DCCH_MUX_OPTION_IND is equal to '11':
  - The mobile station shall store the forward Fundamental Channel multiplex option ($FOR\_FCH\_MUX\_OPTION_s = FOR\_MUX\_OPTION_r$).
  - The mobile station shall store the reverse Fundamental Channel multiplex option ($REV\_FCH\_MUX\_OPTION_s = REV\_MUX\_OPTION_r$).
  - The mobile station shall store the forward Dedicated Control Channel multiplex option ($FOR\_DCCH\_MUX\_OPTION_s = FOR\_DCCH\_MUX\_OPTION_r$).
  - The mobile station shall store the reverse Dedicated Control Channel multiplex option ($REV\_DCCH\_MUX\_OPTION_s = REV\_DCCH\_MUX\_OPTION_r$).

- The mobile station shall store the set of number of bits per frame of the forward Fundamental Channel and Dedicated Control Channel [$FOR\_NUM\_BITS_s = FOR\_NUM\_BITS_r$].
- The mobile station shall store the set of number of bits per frame of the reverse Fundamental Channel and Dedicated Control Channel [$REV\_NUM\_BITS_s = REV\_NUM\_BITS_r$].
- If a service option connection has been omitted from the service option connection records, the Layer 3 shall terminate the call control instance (currently existing or

pending instantiation) identified by the connection reference corresponding to the omitted service option connection.

- If this is the first Service Configuration Record received from the base station in a *Service Connect Message*, *General Handoff Direction Message*, or *Universal Handoff Direction Message* and accepted by the mobile station since entering the *Traffic Channel substate*, the mobile station shall also identify the Call Control instance currently identified by NULL by the connection reference assigned to the first service option connection, CON_REF_r; otherwise, the mobile station shall identify the Call Control instance corresponding to the first service option connection listed in this Service Configuration information record by the NULL identifier.

- The mobile station shall delete all instances of current service option connection records. For each of the $NUM\_CON\_REC_r$ occurrences of the service option connection record (SO_CON_REC[i]), the mobile station shall perform the following:

  – The mobile station shall store the service option connection reference ($SO\_CON\_REC_s$[i].CON_REF = CON_REF_r).

  – The mobile station shall store the service option ($SO\_CON\_REC_s$[i].SERVICE_OPTION = $SERVICE\_OPTION_r$).

  – The mobile station shall store the forward traffic channel traffic type ($SO\_CON\_REC_s$[i].FOR_TRAFFIC = $FOR\_TRAFFIC_r$).

  – The mobile station shall store the reverse traffic channel traffic type ($SO\_CON\_REC_s$[i].REV_TRAFFIC = $REV\_TRAFFIC_r$).

  – The mobile station shall store the encryption mode indicator for user information privacy ($SO\_CON\_REC_s$[i].UI_ENCRYPT_MODE = $UI\_ENCRYPT\_MODE_r$).

  – The mobile station shall store the service reference identifier ($SO\_CON\_REC_s$[i].SR_ID = SR_ID_r).

  – If $RLP\_INFO\_INCL_r$ equals ‘1’, the mobile station shall store the Radio Link Protocol block of bits ($SO\_CON\_REC_s$[i].RLP_BLOB = RLP_BLOB_r).

  – If $QOS\_PARMS\_INCL_r$ equals ‘1’, the mobile station shall store the QoS parameters block ($SO\_CON\_REC_s$[i].QOS_PARMS = QOS_PARMS_r).

- If $FCH\_CC\_INCL_r$ equals ‘1’, the mobile station shall perform the following:

  – The mobile station shall store the indicator for 5ms frames on Fundamental Channel as follows: if $FCH\_FRAME\_SIZE_r$ equals ‘1’, the mobile station shall set $FCH\_5MS\_FRAMES_s$ = ‘1’; otherwise, it is set to ‘0’.

  - The mobile station shall store the Forward Fundamental Channel Radio Configuration ($FOR\_FCH\_RC_s$ = $FOR\_FCH\_RC_r$).

- The mobile station shall store the Reverse Fundamental Channel Radio Configuration ($REV\_FCH\_RC_s = REV\_FCH\_RC_r$).

- If $DCCH\_CC\_INCL_r$ equals ‘1’, the mobile station shall perform the following:
  - The mobile station shall store the indicator for 5ms frames on Dedicated Control Channel as follows: If $DCCH\_FRAME\_SIZE_r$ equals ‘10’ or ‘11’, the mobile station shall set $DCCH\_5MS\_FRAMES_s$ = ‘1’; otherwise, it is set to ‘0’.
  - The mobile station shall store the Forward Dedicated Control Channel Radio Configuration ($FOR\_DCCH\_RC_s = FOR\_DCCH\_RC_r$).
  - The mobile station shall store the Reverse Dedicated Control Channel Radio Configuration ($REV\_DCCH\_RC_s = REV\_DCCH\_RC_r$).

- If $FOR\_SCH\_CC\_INCL_r$ equals ‘1’, the mobile station shall store the $NUM\_FOR\_SCH_r$ occurrences of the Forward Supplemental Channel channel configuration records as follows:
  - The mobile station shall store the Forward Supplemental Channel Identification ($FOR\_SCH\_ID[FOR\_SCH\_ID_r]_s = FOR\_SCH\_ID_r$).
  - The mobile station shall store the Forward Supplemental Channel Multiplex Option ($FOR\_SCH\_MUX[FOR\_SCH\_ID_r]_s = FOR\_SCH\_MUX_r$).
  - The mobile station shall store the Forward Supplemental Channel Radio Configuration ($FOR\_SCH\_RC[FOR\_SCH\_ID_r]_s = SCH\_RC_r$).
  - The mobile station shall store the Forward Supplemental Channel Coding Type ($FOR\_SCH\_CODING[FOR\_SCH\_ID_r]_s = CODING_r$).
  - If $FRAME\_40\_USED_r$ and $FRAME\_80\_USED_r$ are both equal to '0', the mobile station shall set $FOR\_SCH\_FRAME\_LENGTH_s[FOR\_SCH\_ID_r]$ to '00' (i.e., 20 ms frame length).
  - If $FRAME\_40\_USED_r$ is equal to '1', the mobile station shall set $FOR\_SCH\_FRAME\_LENGTH_s[FOR\_SCH\_ID_r]$ to '01' (i.e., 40 ms frame length).
  - If $FRAME\_80\_USED_r$ is equal to '1', the mobile station shall set $FOR\_SCH\_FRAME\_LENGTH_s[FOR\_SCH\_ID_r]$ to '10' (i.e., 80 ms frame length).
  - $F\_MAX\_RATE\_IDX_s[FOR\_SCH\_ID_r] = MAX\_RATE_r$.

- If $REV\_SCH\_CC\_INCL_r$ equals ‘1’, the mobile station shall store the $NUM\_REV\_SCH_r$ occurrences of the Reverse Supplemental Channel channel configuration records as follows:
  - The mobile station shall store the Reverse Supplemental Channel Identification ($REV\_SCH\_ID[REV\_SCH\_ID_r]_s = REV\_SCH\_ID_r$).
  - The mobile station shall store the Reverse Supplemental Channel Multiplex Option ($REV\_SCH\_MUX[REV\_SCH\_ID_r]_s = REV\_SCH\_MUX_r$).
  - The mobile station shall store the Reverse Supplemental Channel Radio Configuration ($REV\_SCH\_RC[REV\_SCH\_ID_r]_s = SCH\_RC_r$).

- The mobile station shall store the Reverse Supplemental Channel Coding Type ($REV\_SCH\_CODING[REV\_SCH\_ID_r]_s = CODING_r$).
- If $FRAME\_40\_USED_r$ and $FRAME\_80\_USED_r$ are both equal to '0', the mobile station shall set $REV\_SCH\_FRAME\_LENGTH_s[REV\_SCH\_ID_r]$ to '00' (i.e., 20 ms frame length).
- If $FRAME\_40\_USED_r$ is equal to '1', the mobile station shall set $REV\_SCH\_FRAME\_LENGTH_s[REV\_SCH\_ID_r]$ to '01' (i.e., 40 ms frame length).
- If $FRAME\_80\_USED_r$ is equal to '1', the mobile station shall set $REV\_SCH\_FRAME\_LENGTH_s[REV\_SCH\_ID_r]$ to '10' (i.e., 80 ms frame length).
- $R\_MAX\_RATE\_IDX_s[REV\_SCH\_ID_r] = MAX\_RATE_r$.

• If $FOR\_PDCH\_CC\_INCL_r$ equals ‘1’, the mobile station shall perform the following:

- The mobile station shall store the Forward Packet Data Channel multiplex option ($FOR\_PDCH\_MUX\_OPTION_s = FOR\_PDCH\_MUX\_OPTION_r$).
- The mobile station shall store the Forward Packet Data Channel Radio Configuration ($FOR\_PDCH\_RC_s = FOR\_PDCH\_RC_r$).

• If $REV\_PDCH\_CC\_INCL_r$ equals ‘1’, the mobile station shall store the following:

- The Reverse Packet Data Channel multiplex option for the higher data rates ($REV\_PDCH\_MUX\_OPTION\_HIGH\_RATE_s = REV\_PDCH\_MUX\_OPTION\_HIGH\_RATE_r$).
- The Reverse Packet Data Channel multiplex option for the lower data rates ($REV\_PDCH\_MUX\_OPTION\_LOW\_RATE_s = REV\_PDCH\_MUX\_OPTION\_LOW\_RATE_r$).
- The Reverse Packet Data Channel Radio Configuration ($REV\_PDCH\_RC_s = REV\_PDCH\_RC_r$).

2.6.4.1.13 Processing the Non-Negotiable Service Configuration Record

The mobile station shall update the Non-Negotiable Service Configuration information record currently in use as follows:

• If FPC_INCL_r equals ‘1’, the mobile station shall perform the following:

- The mobile station shall store the Power Control Subchannel indicator ($FPC\_PRI\_CHAN_s = FPC\_PRI\_CHAN_r$).
- The mobile station shall store the forward power control operation mode ($FPC\_MODE\_NO\_SCH_s = FPC\_MODE_r$).
- The mobile station shall set $FPC\_MODE_s = FPC\_MODE\_NO\_SCH_s$ if there is no forward Supplemental Channel assignment in progress (see 2.6.6.2.5.1.1).
- If $FPC\_OLPC\_FCH\_INCL_r$ equals ‘1’, the mobile station shall perform the following:
  + The mobile station shall store the Fundamental Channel target Frame Error

Rate ($FPC\_FCH\_FER_s = FPC\_FCH\_FER_r$).

+ The mobile station shall store the minimum Fundamental Channel Outer Loop E_b/N_t setpoint ($FPC\_FCH\_MIN\_SETPT_s = FPC\_FCH\_MIN\_SETPT_r$).

+ The mobile station shall store the maximum Fundamental Channel Outer Loop E_b/N_t setpoint ($FPC\_FCH\_MAX\_SETPT_s = FPC\_FCH\_MAX\_SETPT_r$).

- If $FPC\_OLPC\_DCCH\_INCL_r$ equals '1', the mobile station shall perform the following:

  + The mobile station shall store the Dedicated Control Channel target Frame Error Rate ($FPC\_DCCH\_FER_s = FPC\_DCCH\_FER_r$).

  + The mobile station shall store the minimum Dedicated Control Channel Outer Loop E_b/N_t setpoint ($FPC\_DCCH\_MIN\_SETPT_s = FPC\_DCCH\_MIN\_SETPT_r$).

  + The mobile station shall store the maximum Dedicated Control Channel Outer Loop E_b/N_t setpoint ($FPC\_DCCH\_MAX\_SETPT_s = FPC\_DCCH\_MAX\_SETPT_r$).

• If $GATING\_RATE\_INCL_r$ equals '1', the mobile station shall store the Reverse Pilot Channel gating rate ($PILOT\_GATING\_RATE_s = PILOT\_GATING\_RATE_r$).

• If $FOR\_SCH\_INCL_r$ equals '1', the mobile station shall store the $NUM\_FOR\_SCH_r$ occurrences of the Forward Supplemental Channel information as follows:

- The mobile station shall store the Forward Supplemental Channel Multiframe Offset ($FOR\_SCH\_FRAME\_OFFSET[FOR\_SCH\_ID_r]_s = FOR\_SCH\_FRAME\_OFFSET_r$).

• If $REV\_SCH\_CC\_INCL_r$ equals '1', the mobile station shall store the $NUM\_REV\_SCH_r$ occurrences of the Reverse Supplemental Channel information as follows:

- The mobile station shall store the Reverse Supplemental Channel Multiframe Offset ($REV\_SCH\_FRAME\_OFFSET[REV\_SCH\_ID_r]_s = REV\_SCH\_FRAME\_OFFSET_r$).

• The mobile station shall determine the Logical-to-Physical Mapping to be used as follows:

- If LPM_IND_r equals '00' and an F-PDCH is assigned, the mobile station shall reset the Logical-to-Physical Mapping to their default values as specified in Table 2.6.4.2-2 but with the following modification for requirement 1 stated in Table 2.6.4.2-2:

  + The mobile station shall set the SR_ID field to the value specified in the Service Configuration information record.

- If LPM_IND_r equals '00' and $P\_REV\_IN\_USE_s$ is greater than six and an F-PDCH is not assigned, the mobile station shall reset the Logical-to-Physical Mapping to their default values as specified in Table 2.6.4.2-1 but with the following modification for requirement 1 stated in Table 2.6.4.2-1:
  - The mobile station shall set the SR_ID field to the value specified in the Service Configuration information record.
- If LPM_IND_r equals '00' and $P\_REV\_IN\_USE_s$ is equal to or less than six, the mobile station shall reset the Logical-to-Physical Mapping to their default values as follows:
  - Default number of Logical-to-Physical Mapping entries ($NUM\_LPM\_ENTRIES_s$ = '0100').
  - Default Table(0) Logical-to-Physical Mapping service reference identifier ($LOGICAL\_TO\_PHYSICAL\_MAPPING\_TABLE[0].SR\_ID_s$ = '000').
  - Default Table(0) Logical-to-Physical Mapping logical resource identifier ($LOGICAL\_TO\_PHYSICAL\_MAPPING\_TABLE[0].LOGICAL\_RESOURCE_s$ = '0001']).
  - Default Table(0) Logical-to-Physical Mapping physical resource identifier:
    - If CH_IND_s is equal to '01' or '11', the mobile station shall set $LOGICAL\_TO\_PHYSICAL\_MAPPING\_TABLE[0].PHYSICAL\_RESOURCE_s$ to '0000'.
    - If CH_IND_s is equal to '10', the mobile station shall set $LOGICAL\_TO\_PHYSICAL\_MAPPING\_TABLE[0].PHYSICAL\_RESOURCE_s$ to '0001'.
  - Default Table(0) Logical-to-Physical Mapping forward mapping indicator ($LOGICAL\_TO\_PHYSICAL\_MAPPING\_TABLE[0].FORWARD\_FLAG_s$ = '1').
  - Default Table(0) Logical-to-Physical Mapping reverse mapping indicator ($LOGICAL\_TO\_PHYSICAL\_MAPPING\_TABLE[0].REVERSE\_FLAG_s$ = '1').
  - Default Table(0) Logical-to-Physical Mapping priority ($LOGICAL\_TO\_PHYSICAL\_MAPPING\_TABLE[0].PRIORITY_s$ = '0000').
  - Default Table(1) Logical-to-Physical Mapping service reference identifier ($LOGICAL\_TO\_PHYSICAL\_MAPPING\_TABLE[1].SR\_ID_s$ = '001').
  - Default Table(1) Logical-to-Physical Mapping logical resource identifier ($LOGICAL\_TO\_PHYSICAL\_MAPPING\_TABLE[1].LOGICAL\_RESOURCE_s$ = '0000').
  - Default Table(1) Logical-to-Physical Mapping physical resource identifier:
    - If CH_IND_s is equal to '01' or '11', the mobile station shall set $LOGICAL\_TO\_PHYSICAL\_MAPPING\_TABLE[1].PHYSICAL\_RESOURCE_s$ to '0000'.

- If CH_IND_S is equal to '10', the mobile station shall set LOGICAL_TO_PHYSICAL_MAPPING_TABLE[1].PHYSICAL_RESOURCE$_S$ to '0001'.

+ Default Table(1) Logical-to-Physical Mapping forward mapping indicator (LOGICAL_TO_PHYSICAL_MAPPING_TABLE[1].FORWARD_FLAG$_S$ = '1').

+ Default Table(1) Logical-to-Physical Mapping reverse mapping indicator (LOGICAL_TO_PHYSICAL_MAPPING_TABLE[1].REVERSE_FLAG$_S$ = '1').

+ Default Table(1) Logical-to-Physical Mapping priority (LOGICAL_TO_PHYSICAL_MAPPING_TABLE[1].PRIORITY$_S$ = '0000').

+ Default Table(2) Logical-to-Physical Mapping service reference identifier (LOGICAL_TO_PHYSICAL_MAPPING_TABLE[2].SR_ID$_S$ = '001').

+ Default Table(2) Logical-to-Physical Mapping logical resource identifier (LOGICAL_TO_PHYSICAL_MAPPING_TABLE[2].LOGICAL_RESOURCE$_S$ = '0000']).

+ Default Table(2) Logical-to-Physical Mapping physical resource identifier (LOGICAL_TO_PHYSICAL_MAPPING_TABLE[2].PHYSICAL_RESOURCE$_S$ to '0010').

+ Default Table(2) Logical-to-Physical Mapping forward mapping indicator (LOGICAL_TO_PHYSICAL_MAPPING_TABLE[2].FORWARD_FLAG$_S$ = '1').

+ Default Table(2) Logical-to-Physical Mapping reverse mapping indicator (LOGICAL_TO_PHYSICAL_MAPPING_TABLE[2].REVERSE_FLAG$_S$ = '1').

+ Default Table(2) Logical-to-Physical Mapping priority (LOGICAL_TO_PHYSICAL_MAPPING_TABLE[2].PRIORITY$_S$ = '0000').

+ Default Table(3) Logical-to-Physical Mapping service reference identifier (LOGICAL_TO_PHYSICAL_MAPPING_TABLE[3].SR_ID$_S$ = '001').

+ Default Table(3) Logical-to-Physical Mapping logical resource identifier (LOGICAL_TO_PHYSICAL_MAPPING_TABLE[3].LOGICAL_RESOURCE$_S$ = '0000']).

+ Default Table(3) Logical-to-Physical Mapping physical resource identifier (LOGICAL_TO_PHYSICAL_MAPPING_TABLE[3].PHYSICAL_RESOURCE$_S$ to '0011').

+ Default Table(3) Logical-to-Physical Mapping forward mapping indicator (LOGICAL_TO_PHYSICAL_MAPPING_TABLE[3].FORWARD_FLAG$_S$ = '1').

+ Default Table(3) Logical-to-Physical Mapping reverse mapping indicator (LOGICAL_TO_PHYSICAL_MAPPING_TABLE[3].REVERSE_FLAG$_S$ = '1').

+ Default Table(3) Logical-to-Physical Mapping priority (LOGICAL_TO_PHYSICAL_MAPPING_TABLE[3].PRIORITY$_S$ = '0000').

- If LPM_IND_r equals '01', the mobile station shall use the Logical-to-Physical Mapping included in this Non-Negotiable Service Configuration Record. The mobile station shall perform the following: The mobile station shall delete the Logical-to-Physical Mapping currently in use. The mobile station shall store the number of Logical-to-Physical Mapping entries ($NUM\_LPM\_ENTRIES_s$ = $NUM\_LPM\_ENTRIES_r$). For each ith record of the $NUM\_LPM\_ENTRIES_r$ Logical-to-Physical Mapping records included in the received Non-Negotiable Service Configuration Record:
  - The mobile station shall store the Logical-to-Physical Mapping service reference identifier ($LOGICAL\_TO\_PHYSICAL\_MAPPING\_TABLE[i].SR\_ID_s$ = SR_ID_r).
  - The mobile station shall store the Logical-to-Physical Mapping logical resource identifier ($LOGICAL\_TO\_PHYSICAL\_MAPPING\_TABLE[i].LOGICAL\_RESOURCE_s$ = $LOGICAL\_RESOURCE_r$).
  - The mobile station shall store the Logical-to-Physical Mapping Physical Channel ($LOGICAL\_TO\_PHYSICAL\_MAPPING\_TABLE[i].PHYSICAL\_RESOURCE_s$ = $PHYSICAL\_RESOURCE_r$).
  - The mobile station shall store the Logical-to-Physical Mapping forward mapping indicator ($LOGICAL\_TO\_PHYSICAL\_MAPPING\_TABLE[i].FORWARD\_FLAG_s$ = $FORWARD\_FLAG_r$).
  - The mobile station shall store the Logical-to-Physical Mapping reverse mapping indicator ($LOGICAL\_TO\_PHYSICAL\_MAPPING\_TABLE[i].REVERSE\_FLAG_s$ = $REVERSE\_FLAG_r$).
  - The mobile station shall store the Logical-to-Physical Mapping priority ($LOGICAL\_TO\_PHYSICAL\_MAPPING\_TABLE[i].PRIORITY_s$ = $PRIORITY_r$).
- If LPM_IND_r equals '10', the mobile station shall use the Logical-to-Physical Mapping currently in use.

- For each of the NUM_REC_r occurrences of the service-specific records included in the Non-negotiable Service Configuration Record, the mobile station shall perform the following:
  - The mobile station shall store the Short Data Burst service option number omitted indicator ($SDB\_SO\_OMIT_s$ [SR_ID_r]= $SDB\_SO\_OMIT_r$).

- The mobile station shall store the following:
  - $USE\_FLEX\_NUM\_BITS_s$ = $USE\_FLEX\_NUM\_BITS_r$
  - $USE\_VAR\_RATE_s$ = $USE\_VAR\_RATE_r$

- If $USE\_VAR\_RATE_r$ is equal to '1', then the mobile station shall store the following:
  - $R\_INC\_RATE\_ALLOWED_s = R\_INC\_RATE\_ALLOWED_r$
  - $F\_INC\_RATE\_ALLOWED_s = F\_INC\_RATE\_ALLOWED_r$
- If $USE\_FLEX\_NUM\_BITS_r$ or $USE\_VAR\_RATE_r$ is equal to '1', then the mobile station shall store the following:
  - $USE\_ERAM_s = USE\_ERAM_r$

• If $NUM\_BITS\_TABLES\_INCL_r$ is included and is equal to '1', the mobile station shall store NUM_BITS_TABLES_COUNT+1 instances of the Flexible Rate Table (NUM_RECS triplets of (NUM_BITS_IDX, NUM_BITS, CRC_LEN_IDX) corresponding to each NUM_BITS_TABLE_ID) as follows:

- For each of the NUM_RECS occurrences of the three field record consisting of NUM_BITS_IDX, NUM_BITS, and CRC_LEN_IDX the mobile station shall store the following
  - $NUM\_BITS_s[NUM\_BITS\_TABLE\_ID_r][NUM\_BITS\_IDX_r] = NUM\_BITS_r$;
  - $CRC\_LEN\_IDX_s[NUM\_BITS\_TABLE\_ID_r][NUM\_BITS\_IDX_r] = CRC\_LEN\_IDX_r$;

• If $USE\_OLD\_FLEX\_MAPPING_r$ is included and equal to '0', the mobile station shall store the following:

- $FFCH\_NBIT\_TABLE\_ID_s = FFCH\_NBIT\_TABLE\_ID_r$.
- $RFCH\_NBIT\_TABLE\_ID_s = RFCH\_NBIT\_TABLE\_ID_r$.
- $FSCH\_NBIT\_TABLE\_ID_s[1] = FSCH0\_NBIT\_TABLE\_ID_r$.
- $FSCH\_NBIT\_TABLE\_ID_s[2] = FSCH1\_NBIT\_TABLE\_ID_r$.
- $RSCH\_NBIT\_TABLE\_ID_s[1] = RSCH0\_NBIT\_TABLE\_ID_r$.
- $RSCH\_NBIT\_TABLE\_ID_s[2] = RSCH1\_NBIT\_TABLE\_ID_r$.
- $FDCCH\_NBIT\_TABLE\_ID_s = FDCCH\_NBIT\_TABLE\_ID_r$.
- If $FDCCH\_NBIT\_TABLE\_ID_s$ is not equal to '0000', then the mobile station shall store $FDCCH\_NBITS\_IDX_s = FDCCH\_NBITS\_IDX_r$.
- $RDCCH\_NBIT\_TABLE\_ID_s = RDCCH\_NBIT\_TABLE\_ID_r$.
- If $RDCCH\_NBIT\_TABLE\_ID_s$ is not equal to '0000', then the mobile station shall store $RDCCH\_NBITS\_IDX_s = RDCCH\_NBITS\_IDX_r$.

• Otherwise, the mobile station shall use the previously stored values for the above variables.

• If $USE\_FLEX\_NUM\_BITS_r$ is equal to '0', the mobile station shall store the following:

- $FFCH\_NBIT\_TABLE\_ID_s$ = '0000'.
- $RFCH\_NBIT\_TABLE\_ID_s$ = '0000'.
- $FSCH\_NBIT\_TABLE\_ID_s[1]$ = '0000'.

- FSCH_NBIT_TABLE_ID$_S$[2] = ‘0000’.
- RSCH_NBIT_TABLE_ID$_S$[1] = ‘0000’.
- RSCH_NBIT_TABLE_ID$_S$[2] = ‘0000’.
- FDCCH_NBIT_TABLE_ID$_S$ = ‘0000’.
- FDCCH_NBITS_IDX$_S$ = ‘0000’.
- RDCCH_NBIT_TABLE_ID$_S$ = ‘0000’.
- FDCCH_NBITS_IDX$_S$ = ‘0000’.

• If VAR_TABLES_INCL$_r$ is included and is equal to ‘1’, the mobile station shall store VAR_RATE_TABLES_COUNT+1 instances of the Variable Rate Mask Table (NUM_RECS pairs of (NUM_BITS_IDX, MASK) corresponding to each VAR_RATE_TABLE_ID) as follows:

- For each of the NUM_RECS + 1 occurrences of the two-field record consisting of NUM_BITS_IDX and MASK the mobile station shall store the following:
  + MASK$_S$[VAR_RATE_TABLE_ID$_r$][NUM_BITS_IDX$_r$] = MASK$_r$;
- If FSCH_VAR_TABLE_ID$_S$[1] is not equal to ‘000’, then the mobile station shall store the following:
  + For row=1, …, 15
    - For i=1, …, row,
      - If the ith bit position in MASK$_S$[FSCH_VAR_TABLE_ID$_S$[1]][row] is equal to '1', then the mobile station shall set VAR_FSCH_RATE_OFFSET$_S$[1][row][i] to i,
      - otherwise, the mobile shall set VAR_FSCH_RATE_OFFSET$_S$[1][row][i] to '0'.
- If FSCH_VAR_TABLE_ID$_S$[2] is not equal to ‘000’, then the mobile station shall store the following:
  + For row=1, …, 15
    - For i=1, …, row,
      - If the ith bit position in MASK$_S$[FSCH_VAR_TABLE_ID$_S$[2]][row] is equal to '1', then the mobile station shall set VAR_FSCH_RATE_OFFSET$_S$[2][row][i] to i,
      - otherwise, the mobile shall set VAR_FSCH_RATE_OFFSET$_S$[2][row][i] to '0'.
- If RSCH_VAR_TABLE_ID$_S$[1] is not equal to ‘000’, then the mobile station shall store the following:
  + For row=1, …, 15
    - For i=1, …, row,

- ◊ If the ith bit position in $MASK_s$[RSCH_VAR_TABLE_ID_s[1]][row] is equal to '1', then the mobile station shall set VAR_RSCH_RATE_$OFFSET_s$[1][row][i] to i,
- ◊ otherwise, the mobile shall set VAR_RSCH_RATE_$OFFSET_s$[1][row][i] to '0'.

- If RSCH_VAR_TABLE_ID_s[2] is not equal to ‘000’, then the mobile station shall store the following:
  - For row=1, …, 15
    - For i=1, …, row,
      - ◊ If the ith bit position in $MASK_s$[RSCH_VAR_TABLE_ID_s[2]][row] is equal to '1', then the mobile station shall set VAR_RSCH_RATE_$OFFSET_s$[2][row][i] to i,
      - ◊ otherwise, the mobile shall set VAR_RSCH_RATE_$OFFSET_s$[2][row][i] to '0'.

- If USE_OLD_VAR_$MAPPING_r$ is included and equal to ‘0’, the mobile station shall store the following:
  - FSCH_VAR_TABLE_ID_s[1] = FSCH0_VAR_TABLE_ID_r.
  - FSCH_VAR_TABLE_ID_s[2] = FSCH1_VAR_TABLE_ID_r.
  - RSCH_VAR_TABLE_ID_s[1] = RSCH0_VAR_TABLE_ID_r.
  - RSCH_VAR_TABLE_ID_s[2] = RSCH1_VAR_TABLE_ID_r.
- Otherwise, use the previously stored values for the above four variables.
- If USE_VAR_$RATE_r$ is equal to ‘0’, the mobile station shall store the following:
  - FSCH_VAR_TABLE_ID_s[1] = ‘000’.
  - FSCH_VAR_TABLE_ID_s[2] = ‘000’.
  - RSCH_VAR_TABLE_ID_s[1] = ‘000’.
  - RSCH_VAR_TABLE_ID_s[2] = ‘000’.
- If LTU_TABLES_$INCL_r$ is included and is equal to ‘1’, then the mobile station shall store NUM_LTU_TABLES + 1 instances of the LTU Table which determines the number of LTUs per frame for convolutionally encoded supplemental channels for each number of bits per frame. Each LTU Table is identified by its LTU_TABLE_ID.
  - For each of the NUM_ROWS +1 rows of the LTU Table, the mobile station shall store the following:
    - LTU_TAB_s[LTU_TABLE_ID_r][NBITS_IDX_r] = NUM_$LTUS_r$
- If USE_OLD_LTU_$MAPPING_r$ is included and is equal to ‘0’, then the mobile station shall store the following:
  - FSCH_LTU_TAB_ID_s[1] = FSCH0_LTU_TAB_ID_r

- FSCH_LTU_TAB_ID$_s$[2] = FSCH1_LTU_TAB_ID$_r$
- RSCH_LTU_TAB_ID$_s$[1] = RSCH0_LTU_TAB_ID$_r$
- RSCH_LTU_TAB_ID$_s$[2] = RSCH1_LTU_TAB_ID$_r$

• Else (if USE_OLD_LTU_MAPPING$_r$ is included and is equal to '1'), the mobile station shall use the previously stored values for the above four variables.

• If LTU_INFO_INCL$_r$ is equal to '0', then the mobile station shall store the following:

- FSCH_LTU_TAB_ID$_s$[1] = '000'
- FSCH_LTU_TAB_ID$_s$[2] = '000'
- RSCH_LTU_TAB_ID$_s$[1] = '000'
- RSCH_LTU_TAB_ID$_s$[2] = '000'

• If PARTITION_TABLES_INCL$_r$ is included and is equal to '1', then the mobile station shall store NUM_PARTITION_TABLES + 1 instances of the Partition Table which determines the number of bits allocated to each service per FCH or DCCH frame as follows. Each Partition Table is identified by its PARTITION_TABLE_ID.

- For each of the NUM_ROWS+1 rows of the Partition Table, the mobile station shall store the following:
  + PART_TAB$_s$[PARTITION_TABLE_ID$_r$][CATEGORY$_r$].MUX_HEADER_LEN = MUX_HEADER_LEN$_r$
  + PART_TAB$_s$[PARTITION_TABLE_ID$_r$][CATEGORY$_r$].MUX_HEADER = MUX_HEADER$_r$
  + PART_TAB$_s$[PARTITION_TABLE_ID$_r$][CATEGORY$_r$]. NUM_PARTITIONS = NUM_PARTITIONS$_r$
  + For i=1, ..., NUM_PARTITIONS+1; the mobile station shall store the following:
    o PART_TAB$_s$[PARTITION_TABLE_ID$_r$][CATEGORY$_r$]. PARTITION_SR_ID[i] = SR_ID$_r$
    o PART_TAB$_s$[PARTITION_TABLE_ID$_r$][CATEGORY$_r$]. PARTITION_NBITS[i] = SRV_NUM_BITS$_r$

• Else (if PARTITION_TABLES_INCL$_r$ is included and is equal to '0'), the mobile station shall use the previously stored values for the PART_TAB$_s$.

• If USE_OLD_PART_MAPPING$_r$ is included and is equal to '0', then the mobile station shall store the following:

- FFCH_PART_TAB_ID$_s$ = FFCH_PART_TAB_ID$_r$
- RFCH_PART_TAB_ID$_s$ = RFCH_PART_TAB_ID$_r$
- FDCCH_PART_TAB_ID$_s$ = FDCCH_PART_TAB_ID$_r$
- RDCCH_PART_TAB_ID$_s$ = RDCCH_PART_TAB_ID$_r$

- If $USE\_FLEX\_NUM\_BITS_S$ is equal to '0', then the mobile station shall store the following:
  - $FFCH\_PART\_TAB\_ID_S$ = '000'
  - $RFCH\_PART\_TAB\_ID_S$ = '000'
  - $FDCCH\_PART\_TAB\_ID_S$ = '000'
  - $RDCCH\_PART\_TAB\_ID_S$ = '000'
- If $SWITCHING\_PARMS\_INCL_r$ is included and equal to '1', set $NUM\_SOFT\_SWITCHING\_FRAMES\_CHM_S$ to $NUM\_SOFT\_SWITCHING\_FRAMES\_CHM_r + 1$, and $NUM\_SOFTER\_SWITCHING\_FRAMES\_CHM_S$ to $NUM\_SOFTER\_SWITCHING\_FRAMES\_CHM_r + 1$.
- If RPC_INCL_r is equal to '1' and the mobile station supports any Radio Configuration greater than 2, the mobile station shall perform the following:
  - If RPC_ADJ_REC_TYPE is equal to '0000', the mobile station shall update the Reverse Channel Adjustment Gain Table (see [2]) containing an offset relative to the Reverse Pilot Channel power for each reverse link code channel received in this message.
  - If RPC_ADJ_REC_TYPE is equal to '0001' or '0010', the mobile station shall update the Reverse Link Attribute Adjustment Gain Table (see [2]) containing an offset relative to the Reverse Pilot Channel power for each transmission rate, frame length, coding type received in this message.
  - If RPC_ADJ_REC_TYPE is equal to '0011', at the action time of the message, the mobile station shall update the Reverse Link Attribute Adjustment Gain Table (see [2]) containing an offset relative to the Reverse Pilot Channel power for the R-CQICH.
  - If RPC_ADJ_REC_TYPE is equal to '0100', the mobile station shall do the following:
    - At the first R-PDCH frame boundary at or after the action time of the message, the mobile station shall update the Reverse Link Attribute Adjustment Gain Table (see [2]) containing an offset relative to the Reverse Pilot Channel power for any combination of the following channels:
      - R-REQCH
      - R-SPICH
      - R-PDCCH possibly for each encoder packet size, or for the boosted and non boosted modes
      - R-PDCH possibly for each encoder packet size, or for the boosted and non boosted modes, or for each encoder packet size and transmission round

+ At the action time of the message, the mobile station shall update the Reverse Link Attribute Adjustment Gain Table (see [2]) containing an offset relative to the Reverse Pilot Channel power for the R-ACKCH.

+ If $REV\_SPICH\_ADJ\_INCL_r$ is equal to '1', the mobile station shall set $REV\_SPICH\_EP\_SIZE_s$ to $REV\_SPICH\_EP\_SIZE_r$+1.

- The mobile station shall determine the BCMC Logical-to-Physical Mapping to be used as follows:
  - If $BCMC\_LPM\_INCL_r$ equals '0', the mobile station shall delete the BCMC Logical-to-Physical Mapping currently in use.
  - If $BCMC\_LPM\_IND_r$ is included and equals '01', the mobile station shall use the BCMC Logical-to-Physical Mapping included in this Non-Negotiable Service Configuration Record. The mobile station shall perform the following:

    + The mobile station shall delete the BCMC Logical-to-Physical Mapping currently in use.

    + The mobile station shall store the BCMC Logical-to-Physical Mapping entry for each BCMC_FLOW_ID (see 2.6.13.11) included in NNSCR.

    For each ith record of the BCMC Logical-to-Physical Mapping records included in the received Non-Negotiable Service Configuration Record:

    + The mobile station shall store the BCMC Logical-to-Physical Mapping BCMC flow identifier ($BCMC\_LOGICAL\_TO\_PHYSICAL\_MAPPING\_TABLE[i].BCMC\_FLOW\_ID_s$ = ith occurrence of BCMC_FLOW_ID (BCMC flow identifier). See section 2.6.13.11).

    + The mobile station shall store the BCMC Logical-to-Physical Mapping Physical Channel ($BCMC\_LOGICAL\_TO\_PHYSICAL\_MAPPING\_TABLE[i].PHYSICAL\_RESOURCE_s$ = $PHYSICAL\_RESOURCE_r$).

    + The mobile station shall store the BCMC Logical-to-Physical Mapping forward mapping indicator ($BCMC\_LOGICAL\_TO\_PHYSICAL\_MAPPING\_TABLE[i].FORWARD\_FLAG_s$ = $FORWARD\_FLAG_r$).

    + The mobile station shall store the BCMC Logical-to-Physical Mapping reverse mapping indicator ($BCMC\_LOGICAL\_TO\_PHYSICAL\_MAPPING\_TABLE[i].REVERSE\_FLAG_s$ = $REVERSE\_FLAG_r$).

    + The mobile station shall store the BCMC Logical-to-Physical Mapping BSR_ID included indicator ($BCMC\_LOGICAL\_TO\_PHYSICAL\_MAPPING\_TABLE[i].BSR\_ID\_INCL_s$ = $BSR\_ID\_INCL_r$).

+ If the $BSR\_ID\_INCL_r$ is set to '1', the mobile station shall store the following:
  - o BCMC Logical-to-Physical Mapping BSR_ID (BCMC_LOGICAL_TO_PHYSICAL_MAPPING_TABLE[i].BSR_ID_s = BSR_ID_r).
+ If the $BSR\_ID\_INCL_r$ is set to '0', the mobile station shall store the following:
  - o BCMC Logical-to-Physical Mapping Forward Traffic Channel traffic type (BCMC_LOGICAL_TO_PHYSICAL_MAPPING_TABLE[i].$FOR\_TRAFFIC_s$ = $FOR\_TRAFFIC_r$).
  - o BCMC Logical-to-Physical Mapping Reverse Traffic Channel traffic type (BCMC_LOGICAL_TO_PHYSICAL_MAPPING_TABLE[i].$REV\_TRAFFIC_s$ = $REV\_TRAFFIC_r$).

- If $BCMC\_LPM\_IND_r$ is included and equals '10', the mobile station shall use the BCMC Logical-to-Physical Mapping currently in use.

• If a BCMC_FLOW_ID (See 2.6.13.11) has been omitted from the BCMC Logical-to-Physical Mapping, the mobile station shall perform the following:

- Layer 3 shall send a *BCMC-Monitor.Response(BCMC_FLOW_ID, result=FAILURE, cause= FLOW_NOT_AVAILABLE, reason_ind)* to the BCMC Service Layer, where reason_ind is set to CALL_RELEASE.
- Layer 3 shall terminate the call control instance identified by the BCMC_FLOW_ID corresponding to the omitted BCMC flow

• If a BCMC_FLOW_ID (See 2.6.13.11) has been added to the BCMC Logical-to-Physical Mapping, the mobile station shall perform the following:

- Layer 3 shall send a *BCMC-Monitor.Response(BCMC_FLOW_ID, result=SUCCESS)* to the BCMC Service Layer.
- Layer 3 shall instantiate a call control instance and identify it by the BCMC_FLOW_ID corresponding to the this BCMC flow

• If $REV\_PDCH\_PARMS\_INCL_r$ is equal to '1', then the mobile station shall store the following:

- If $REV\_PDCH\_PARMS\_1\_INCL_r$ is equal to '1', the base station shall set:
  + $REV\_PDCH\_MAX\_AUTO\_TPR_s$ to $REV\_PDCH\_MAX\_AUTO\_TPR_r$, and
  + $REV\_PDCH\_NUM\_ARQ\_ROUNDS\_NORMAL_s$ to $REV\_PDCH\_NUM\_ARQ\_ROUNDS\_NORMAL_r$+1.
- If $REV\_PDCH\_OPER\_PARMS\_INCL_r$ is equal to '1', the mobile station shall set:
  + $REV\_PDCH\_MAX\_SIZE\_ALLOWED\_ENCODER\_PACKET_s$ = $REV\_PDCH\_MAX\_SIZE\_ALLOWED\_ENCODER\_PACKET_r$+1,
  + $REV\_PDCH\_DEFAULT\_PERSISTENCE_s$ = $REV\_PDCH\_DEFAULT\_PERSISTENCE_r$,
  + $REV\_PDCH\_RESET\_PERSISTENCE_s$ = $REV\_PDCH\_RESET\_PERSISTENCE_r$,

- REV_PDCH_GRANT_PRECEDENCE$_s$ = REV_PDCH_GRANT_PRECEDENCE$_r$.
- REV_PDCH_ALWAYS_ACK_FINAL_ROUND$_s$ = REV_PDCH_ALWAYS_ACK_FINAL_ROUND$_r$.
- REV_PDCH_MSIB_SUPPORTED$_s$ = REV_PDCH_MSIB_SUPPORTED$_r$, and
- REV_PDCH_SOFT_SWITCHING_RESET_IND$_s$ = REV_PDCH_SOFT_SWITCHING_RESET_IND$_r$.

- REV_PDCH_BOOST_PARMS_INCL$_s$ to REV_PDCH_BOOST_PARMS_INCL$_r$.
- If REV_PDCH_BOOST_PARMS_INCL$_s$ is equal to '1', the base station shall set REV_PDCH_NUM_ARQ_ROUNDS_BOOST$_s$ to REV_PDCH_NUM_ARQ_ROUNDS_BOOST$_r$+1, and REV_PDCH_BOOST_OVERSHOOT$_s$ to REV_PDCH_BOOST_OVERSHOOT$_r$.
- REV_REQCH_ENABLED$_s$ to REV_REQCH_ENABLED$_r$.
- If REV_REQCH_ENABLED$_s$ is equal to '0', the mobile station shall set REV_PDCH_REQCH_TRIGGER$_s$ to NULL.
- If REV_REQCH_ENABLED$_s$ is equal to '1', the mobile station shall set REV_REQCH_PARMS_INCL$_s$ to REV_REQCH_PARMS_INCL$_r$; otherwise, the mobile station shall set REV_REQCH_PARMS_INCL$_s$ to '0'.
- If REV_REQCH_PARMS_INCL$_s$ is equal to '1', the mobile station shall store the following:
  - REV_REQCH_QUICK_REPEAT_ALLOWED$_s$ to REV_REQCH_QUICK_REPEAT_ALLOWED$_r$.
  - REV_REQCH_POWER_REPORTS_PARMS_INCL$_s$ to REV_REQCH_POWER_REPORTS_PARMS_INCL$_r$.
  - If REV_REQCH_POWER_REPORTS_PARMS_INCL$_s$ is equal to '1', the mobile station shall store the following:
    - REV_REQCH_POWER_HEADROOM_INCREASE$_s$ to REV_REQCH_POWER_HEADROOM_INCREASE$_r$.
    - REV_REQCH_POWER_HEADROOM_DECREASE$_s$ to REV_REQCH_POWER_HEADROOM_DECREASE$_r$.
    - REV_REQCH_HEADROOM_DURATION$_s$ to REV_REQCH_HEADROOM_DURATION$_r$.
    - REV_REQCH_MAX_POWER_UPDATE_DURATION$_s$ to REV_REQCH_MAX_POWER_UPDATE_DURATION$_r$.
- REV_PDCH_CRC_PARMS_INCL$_s$ to REV_PDCH_CRC_PARMS_INCL$_r$.
- If REV_PDCH_CRC_PARMS_INCL$_s$ is equal to '1', the mobile station shall store the following:
  - REV_PDCH_INIT_TARGET_TPR$_s$ to REV_PDCH_INIT_TARGET_TPR$_r$.

- REV_PDCH_MAX_TARGET_TPR$_S$ to REV_PDCH_MAX_TARGET_TPR$_r$.
- REV_PDCH_QUICK_START_THRESH$_S$ to REV_PDCH_QUICK_START_THRESH$_r$.
- The mobile station shall set (k = 0).
- For i = 1 to (11 × (REV_PDCH_EP_MAP_LEN$_r$ +1)), if REV_PDCH_EP_MAP$_r$[i]=1, the mobile station shall set:
  - (k = k+1),
  - REV_PDCH_STEP_UP$_S$[i] to (the kth occurrence of REV_PDCH_STEP_UP$_r$)/32, and
  - REV_PDCH_STEP_DOWN$_S$[i] to (the kth occurrence of REV_PDCH_STEP_UP$_r$)/32.

- The mobile station shall set (k = 0).
- For i = 0 to 6, the mobile station shall perform the following:
  - If REV_PDCH_SR_ID_MAP$_r$[i]=0, the mobile station shall set
    - REV_PDCH_BOOST_ALLOWED[i]$_S$ to NULL , and
    - REV_PDCH_AUTO_ALLOWED[i]$_S$ to NULL
  - Otherwise, the mobile station shall perform the following:
    - The mobile station shall set (k = k+1)
    - REV_PDCH_BOOST_ALLOWED$_S$[i] to the kth occurrence of REV_PDCH_BOOST_ALLOWED$_r$, and
    - REV_PDCH_AUTO_ALLOWED$_S$[i] to the kth occurrence of REV_PDCH_AUTO_ALLOWED$_r$
- If REV_REQCH_PARMS_INCL$_S$ is equal to ‘1’, for i = 0 to 6, if REV_PDCH_SR_ID_MAP$_r$[i]= ’0’, the mobile station shall set:
  - REV_REQCH_USE_DEFAULT_TAB$_S$[i] to NULL,
  - REV_PDCH_BUFFER_SIZE$_S$[i] to NULL,
  - REV_REQCH_BUF_QUANT_PARM_1$_S$[i] to NULL,
  - REV_REQCH_BUF_QUANT_PARM_2$_S$[i] to NULL,
  - REV_PDCH_REQCH_TRIGGER$_S$[i].REV_REQCH_MIN_DURATION to NULL,
  - REV_PDCH_REQCH_TRIGGER$_S$[i]. REV_REQCH_USE_POWER_REPORTS to NULL,
  - REV_PDCH_REQCH_TRIGGER$_S$[i].REV_REQCH_USE_BUFFER_REPORTS to NULL,

- REV_PDCH_REQCH_TRIGGER$_S$[i].REV_REQCH_USE_WATERMARKS to NULL,

- The mobile station shall set (k = 0).
- If REV_REQCH_PARMS_INCL$_S$ is equal to ‘1’, the mobile station shall perform the following:
  - For i = 0 to 7, if either of the following conditions is true:
    - i <7, and REV_PDCH_SR_ID_MAP[i]=’1’, or
    - i=7,

    the mobile station shall perform the following:
    - The mobile station shall set (k = k+1).
    - The mobile station shall set REV_PDCH_REQCH_TRIGGER$_S$[i].REV_REQCH_MIN_DURATION to REV_REQCH_MIN_DURATION$_r$ $\times$ 16, using the kth occurrence of REV_REQCH_MIN_DURATION$_r$;
    - The mobile station shall set REV_PDCH_REQCH_TRIGGER$_S$[i]. REV_REQCH_USE_POWER_REPORTS to the kth occurrence of REV_REQCH_USE_POWER_REPORTS$_r$;
    - The mobile station shall set REV_PDCH_REQCH_TRIGGER$_S$[i].REV_REQCH_USE_BUFFER_REPORTS to the kth occurrence of REV_REQCH_USE_BUFFER_REPORTS$_r$;
    - The mobile station shall set REV_PDCH_REQCH_TRIGGER$_S$[i].REV_REQCH_USE_WATERMARKS to the kth occurrence of REV_REQCH_USE_WATERMARKS$_r$;
    - If any of the following conditions are true,
      - ◊ REV_PDCH_REQCH_TRIGGER$_S$[i]. REV_REQCH_USE_BUFFER_REPORTS is equal to ‘1’.
      - ◊ REV_PDCH_REQCH_TRIGGER$_S$[i]. REV_REQCH_USE_POWER_REPORTS is equal to ‘1’.
      - ◊ REV_PDCH_REQCH_TRIGGER$_S$[i].REV_REQCH_USE_WATERMARKS is equal to ‘1’.

      The mobile station shall perform the following:

- ◊ The mobile station shall set $REV\_REQCH\_USE\_DEFAULT\_TAB_s[i]$ to the kth occurrence of $REV\_REQCH\_USE\_DEFAULT\_TAB_r$.
- ◊ If $REV\_REQCH\_USE\_DEFAULT\_TAB_s[i]$ is equal to '000', then, for j = 1 to 13, the mobile station shall set $REV\_PDCH\_BUFFER\_SIZE_s[i][j]$ to
  $2 \times REV\_REQCH\_BUF\_QUANT\_PARM\_1_r \times j$^2 +
  $REV\_REQCH\_BUF\_QUANT\_PARM\_2_r \times j$,
  using the kth occurrences of $REV\_REQCH\_BUF\_QUANT\_PARM\_1_r$, and $REV\_REQCH\_BUF\_QUANT\_PARM\_2_r$.
- ◊ If $REV\_REQCH\_USE\_DEFAULT\_TAB_s[i]$ is not equal to '000', then, for j = 1 to 13, the mobile station shall set $REV_PDCH_BUFFER_SIZE_s[i][j]$to the buffer size value specified in the jth row of the buffer size table corresponding to $REV\_REQCH\_USE\_DEFAULT\_TAB_s[i]$.

o If $REV\_PDCH\_REQCH\_TRIGGER_s[i]$.REV_REQCH_USE_WATERMARKS is equal to '1', the mobile station shall store the following:

- ◊ $REV\_PDCH\_REQCH\_TRIGGER_s[i]$.
  REV_REQCH_HIGH_WATERMARK to
  $REV\_REQCH\_HIGH\_WATERMARK\_1_r \times$
  8^$REV\_REQCH\_HIGH\_WATERMARK\_2_r$, using the kth occurrences of $REV\_REQCH\_HIGH\_WATERMARK\_1_r$ and $REV\_REQCH\_HIGH\_WATERMARK\_2_r$.
- ◊ $REV\_PDCH\_REQCH\_TRIGGER_s[i]$. REV_REQCH_LOW_WATERMARK to $REV\_REQCH\_LOW\_WATERMARK\_1_r \times$
  8^$REV\_REQCH\_LOW\_WATERMARK\_2_r$, using the kth occurrences of $REV\_REQCH\_LOW\_WATERMARK\_1_r$ and $REV\_REQCH\_LOW\_WATERMARK\_2_r$.
- ◊ $REV\_PDCH\_REQCH\_TRIGGER_s[i]$.REV_REQCH_CEILING to
  $REV\_REQCH\_CEILING\_1_r \times$ 8^$REV\_REQCH\_CEILING\_2_r$,
  using the kth occurrences of $REV\_REQCH\_CEILING\_1_r$ and $REV\_REQCH\_CEILING\_2_r$.
- ◊ $REV\_PDCH\_REQCH\_TRIGGER_s[i]$.$REV\_REQCH\_FLOOR_s[i]$ to
  $REV\_REQCH\_FLOOR\_1_r \times$ 8^$REV\_REQCH\_FLOOR\_2_r$,
  using the kth occurrences of $REV\_REQCH\_FLOOR\_1_r$, and $REV\_REQCH\_FLOOR\_2_r$.

2.6.4.1.14 Processing the Security Mode Command Message

The mobile station shall process the received *Security Mode Command Message* as follows:

- The mobile station shall set $D\_SIG\_ENCRYPT\_MODE_s$ to $D\_SIG\_ENCRYPT\_MODE_r$.
- If MSG_INTEGRITY_SUP is set to '0', the mobile station shall perform the following:

- If $D\_SIG\_ENCRYPT\_MODE_r$ is not equal to '000', the mobile station shall perform the following:
  - Set $ENCRYPT\_MODE_s$ to '11'
  - Form a 128-bit pattern by concatenating the CMEAKEY with a copy of itself (the CMEAKEY is associated with the AUTHR of the *Origination Message* or *Page Response Message*, or the CMEAKEY associated with the AUTHU generated during Unique Challenge-Response procedure as described in 2.3.12.1.4).
  - Set ENC_KEY[KEY_ID] to the 128-bit pattern.
  - Set TX_EXT_SSEQ[0][KEY_ID], TX_EXT_SSEQ[1][KEY_ID], RX_EXT_SSEQ[0][KEY_ID], and RX_EXT_SSEQ[1][KEY_ID] to 1 + 256 × NEW_SSEQ_H if either of the following conditions is true:
    - The NEW_SSEQ_H field is included in the last *Origination Message* or *Page Response Message* and TX_EXT_SSEQ[0][KEY_ID] and TX_EXT_SSEQ[1][KEY_ID] have not been initialized by the last *Channel Assignment Message*, *Extended Channel Assignment Message*, or an earlier f-dsch *Security Mode Command Message* (see 2.3.12.4.1.3).
    - This message is a response to a *Security Mode Request Message* (see 2.3.12.4.1.3) that includes an NEW_SSEQ_H field.

- If MSG_INTEGRITY_SUP is set to '1' and $CHANGE\_KEYS_r$ is set to '1', the mobile station shall perform the following:
  - Set KEY_ID to SDU_KEY_ID provided by the LAC Layer (see [4]).
  - Set $ENCRYPT\_MODE_s$ to '11'.
  - If KEY_ID is equal to '00' or '01', the mobile station shall perform the following:
    - Set TX_EXT_SSEQ[0][KEY_ID], TX_EXT_SSEQ[1][KEY_ID], RX_EXT_SSEQ[0][KEY_ID], and RX_EXT_SSEQ[1][KEY_ID] to 1 + 256 × NEW_SSEQ_H included in the *Origination Message*, *Page Response Message*, or *Security Mode Request Message*).
    - Form a 128-bit pattern by concatenating the CMEAKEY with a copy of itself (the CMEAKEY is associated with the AUTHR of the *Origination Message* or *Page Response Message*, or the CMEAKEY associated with the AUTHU generated during the Unique Challenge-Response procedure as described in 2.3.12.1.4).
    - Set ENC_KEY[KEY_ID] to the 128-bit pattern.
    - Set INT_KEY[KEY_ID] to the 128-bit pattern.
    - Set $LAST\_2G\_KEY\_ID_s$ to KEY_ID.
  - If KEY_ID is equal to '10' or '11', the mobile station shall perform the following:

+ Set TX_EXT_SSEQ[0][KEY_ID][0], TX_EXT_SSEQ[1][KEY_ID], RX_EXT_SSEQ[0][KEY_ID][0], and RX_EXT_SSEQ[1][KEY_ID] to 1 + 256 × NEW_SSEQ_H included in the *Authentication Response Message* or *Security Mode Request Message*).
+ Set ENC_KEY[KEY_ID] to the latest CK generated by AKA.
+ Set INT_KEY[KEY_ID] to the latest IK generated by AKA.
+ Set LAST_3G_KEY_ID$_S$ to KEY_ID.
+ If the mobile station supports R-UIM, then the mobile shall set USE_UAK$_S$ to USE_UAK$_r$; otherwise, the mobile station shall perform the following:
  - Set USE_UAK$_S$ to '0'.
  - If USE_UAK$_r$ is equal to '1', then the mobile station shall send a *Mobile Station Reject Order* with ORDQ equal to '00010100' (UAK not supported).

– Send a *Security Mode Completion Order*.

- For each of the service option connections specified by the CON_REF field included in this message, the mobile station shall set the user information encryption mode in the corresponding service option connection record (SO_CON_REC$_S$[i]) to UI_ENCRYPT_MODE$_r$) (i.e., set SO_CON_REC$_S$[i].UI_ENCRYPT_MODE to UI_ENCRYPT_MODE$_r$ where SO_CON_REC$_S$[i].CON_REF = CON_REF$_r$).
- For each of the service option connections specified by the CON_REF field included in this message, at the action time of the message the mobile station shall start encrypting user information (e.g., voice and data) using the encryption algorithm specified by SO_CON_REC$_S$[i].UI_ENCRYPT_MODE where SO_CON_REC$_S$[i].CON_REF = CON_REF$_r$ (see Table 3.7.4.5-1).
- If ENC_KEY_SIZE$_r$ is included, the mobile station shall set ENC_KEY_SIZE$_S$ to ENC_KEY_SIZE$_r$.
- If ENC_KEY_SIZE$_r$ is included and not set to reserved value and if current key strength is greater than the desired key strength specified by ENC_KEY_SIZE$_r$ according to table 3.7.4.5-2, mobile station shall perform the key strength reduction algorithm procedures to reduce the key strength of ENC_KEY[KEY_ID] according to ENC_KEY_SIZE$_r$ as described in 2.3.12.5.4. The current key strength is 64 bit if KEY_ID is equal to '00' or '01' and is 128 bit if KEY_ID is equal to '10' or '11'.
- If C_SIG_ENCRYPT_MODE is included, the mobile station shall set C_SIG_ENCRYPT_MODE$_S$ to C_SIG_ENCRYPT_MODE$_r$.

2.6.4.1.15 Processing the Handoff Supplementary Information Solicit Message

If the mobile station receives a *Handoff Supplementary Information Solicit Message* from the base station, it shall transmit a *Handoff Supplementary Information Notification Message* to the base station. If the supplementary information for a pilot requested in the *Handoff Supplementary Information Solicit Message* is available, then the mobile station should

include the supplementary information for this pilot.

2.6.4.2 Traffic Channel Initialization Substate

In this substate, the mobile station verifies that it can receive the Forward Traffic Channel and begins transmitting on the Reverse Traffic Channel.

If this substate is entered from the *Traffic Channel Substate* of the *Mobile Station Control* on the *Traffic Channel State* with an Initialization Failure indication, the mobile station shall perform the procedures as specified in 2.6.4.2.1, and shall not perform any of the remaining procedures in this section.

Otherwise, upon entering the *Traffic Channel Initialization Substate*, the mobile station shall perform the following:

- The mobile station shall perform registration initialization as specified in 2.6.5.5.4.1.
- Layer 3 shall send an L2-Supervision.Request primitive to Layer 2 to reset the acknowledgment procedures as specified in [4].
- The mobile station shall initialize Forward Traffic Channel power control as specified in 2.6.4.1.1.1.
- The mobile station shall initialize the list TAG_OUTSTANDING_LIST to be empty.
- If $P\_REV\_IN\_USE_S$ is less than seven, the mobile station shall set $CS\_SUPPORTED_S$ to ‘0’.
- If $P\_REV\_IN\_USE_S$ is less than nine, the mobile station shall set $FOR\_PDCH\_SUPPORTED_S$ to ‘0’.
- The mobile station shall set USE_ERAM_S to ‘0’.
- The mobile station shall set the following variables to their initial default values given below:
  - If the mobile station had included the FOR_PDCH Capability Type-specific fields in the *Origination Message* or *Page Response Message*, the mobile station shall store one plus the value included in the ACK_DELAY field of the message as ACK_DELAY and the value included in the NUM_ARQ_CHAN field of the message as NUM_ARQ_CHAN.
  - Default power control step size ($PWR\_CNTL\_STEP_S$ = ‘000’)
  - Default Reverse Supplemental Channel power offset adjustment relative to Reverse Pilot Channel power
    - $RLGAIN\_SCH\_PILOT_S$ [0]= ‘000000’
    - $RLGAIN\_SCH\_PILOT_S$ [1]= ‘000000’
  - Default Reverse Discontinuous Transmission Duration on Reverse Supplemental Code Channel ($REV\_DTX\_DURATION_S$ = ‘0000’)

- Default Reverse Discontinuous Transmission Duration on Reverse Supplemental Channel ($REV\_SCH\_DTX\_DURATION_S$ = '0000')
- Default channel on which the mobile station is to perform the primary inner loop estimation and the base station is to multiplex the Power Control Subchannel:
  - If CH_IND_S is equal to '01' or if $EXT\_CH\_IND_S$ indicates that F-FCH is assigned and F-DCCH is not assigned, the mobile station shall set $FPC\_PRI\_CHAN_S$ to '0'.
  - If CH_IND_S is equal to '10' or if $EXT\_CH\_IND_S$ indicates that F-DCCH is assigned and F-FCH is not assigned, the mobile station shall set $FPC\_PRI\_CHAN_S$ to '1'.
  - If $EXT\_CH\_IND_S$ indicates that neither F-FCH nor F-DCCH is assigned, the mobile station shall set $FPC\_PRI\_CHAN_S$ to NULL.
- Default forward power control operation mode used except during the forward Supplemental Channel interval ($FPC\_MODE\_NO\_SCH_S$ = '000')
- Default forward power control operation mode used during the forward Supplemental Channel interval ($FPC\_MODE\_SCH_S$ = '000')
- Default forward power control operation mode (FPC_MODE_S = '000')
- Slotted timer ($T\_SLOTTED_S = T_{74m}$)
- Reduced slot cycle mode enabled indicator (RSC_MODE_ENABLED = NO).
- Radio environment reporting mode enabled indicator (RER_MODE_ENABLED = NO).
- Tracking zone mode enabled indicator (TKZ_MODE_ENABLED = NO).
- Tracking zone mode pending indicator (TKZ_MODE_PENDING = NO).
- Default Reverse Pilot Channel gating (PILOT_GATING_USE_RATE='0')
- Default begin preamble for Reverse Supplemental Code Channels ($BEGIN\_PREAMBLE_S$ = '000')
- Default resume preamble for Reverse Supplemental Code Channels ($RESUME\_PREAMBLE_S$ = '000')
- Default start time for Reverse Supplemental Code Channel assignment ($REV\_START\_TIME_S$ = NULL)
- Default retry delays:
  - $RETRY\_DELAY_S[010] = 0$
  - $RETRY\_DELAY_S[011] = 0$

- Default neighbor pilot strength measurement threshold offset ($T\_MULCHAN_S$ = '000')
- Default start time for forward Supplemental Code Channel Assignment ($FOR\_START\_TIME_S$ = NULL)
- Default number of Reverse Supplemental Code Channels ($NUM\_REV\_CODES_S$ = '000')
- Default reverse use T_ADD abort indicator ($USE\_T\_ADD\_ABORT_S$ = '0')
- Default *Supplemental Channel Request Message* sequence number ($SCRM\_SEQ\_NUM_S$ = NULL)
- Default indicator to ignore reverse Supplemental Code Channel assignment ($IGNORE\_SCAM_S$ = '0')
- Default indicator to ignore reverse Supplemental Channel assignment ($IGNORE\_ESCAM_S$ = '0')
- Default search period for the candidate search ($SEARCH\_PERIOD_S$ = '1111')
- Default search window size for the Candidate Frequency Search Set ($CF\_SRCH\_WIN\_N_S = SRCH\_WIN\_N_S$)
- Default search window size for the Remaining Set on the CDMA Candidate Frequency ($CF\_SRCH\_WIN\_R_S = SRCH\_WIN\_R_S$)
- Default pilot PN sequence offset increment for the CDMA Candidate Frequency ($CF\_PILOT\_INC_S = PILOT\_INC_S$)
- Default Candidate Frequency search priorities included indicator ($CF\_SEARCH\_PRIORITY\_INCL_S$ ='0')
- Default Candidate Frequency search window size included indicator ($CF\_SRCH\_WIN\_NGHBR\_INCL_S$ = '0')
- Default Candidate Frequency search window offset included indicator ($CF\_SRCH\_OFFSET\_INCL_S$ = '0')
- Default periodic search indicator ($PERIODIC\_SEARCH_S$ = '0')
- Default return-if-handoff-fail indicator ($RETURN\_IF\_HANDOFF\_FAIL_S$ = '0')
- Default total pilot E_C/I_0 threshold ($MIN\_TOTAL\_PILOT\_EC\_I0_S$ = '00000')
- Default total pilot E_C threshold ($SF\_TOTAL\_EC\_THRESH_S$ = '11111')
- Default total pilot E_C/I_0 threshold ($SF\_TOTAL\_EC\_I0\_THRESH_S$ = '11111')

- Default received power difference threshold
  (DIFF_RX_PWR_THRESH$_S$ = ‘00000’)
- Default maximum wait time on the CDMA Target Frequency
  (TF_WAIT_TIME$_S$ = ‘1111’)
- Default Candidate Frequency Search Set
  (Candidate Frequency Search Set is empty)
- Default Candidate Frequency CDMA band
  (CF_CDMABAND$_S$ = NULL)
- Default Candidate Frequency CDMA channel
  (CF_CDMACH$_S$ = NULL)
- Default indicator for 5ms frames on Fundamental Channel
  (FCH_5MS_FRAMES$_S$ = ‘0’)
- Default indicator for 5ms frames on Dedicated Control Channel
  (DCCH_5MS_FRAMES$_S$ = ‘0’)
- Default start time unit for Supplemental Channel
  (START_TIME_UNIT$_S$ = ‘000’)
- Default Forward Supplemental Channel FER report indicator
  (FOR_SCH_FER_REP$_S$ = ‘0’)
- Default Forward Supplemental Channel Configuration parameters:
  - Set the Forward Supplemental Channel frame length
    FOR_SCH_FRAME_LENGTH$_S$[0] to NULL.
  - Set the Forward Supplemental Channel Multiplex Option
    FOR_SCH_MUX$_S$[0] to NULL.
  - Set the Forward Supplemental Channel Radio Configuration
    FOR_SCH_RC$_S$[0] to NULL.
  - Set the Forward Supplemental Channel Coding Type FOR_SCH_CODING$_S$[0] to NULL.
  - Set QOF_ID$_S$[0][SCCL_INDEX$_S$][i] to NULL, for all integer values of i from 0 to 15.
  - Set FOR_SCH_CC_INDEX$_S$ [0][SCCL_INDEX$_S$][i] to NULL, for all integer values of i from 0 to 15.
  - Set the Forward Supplemental Channel frame length
    FOR_SCH_FRAME_LENGTH$_S$[1] to NULL.
  - Set the Forward Supplemental Channel Multiplex Option
    FOR_SCH_MUX$_S$[1] to NULL.
  - Set the Forward Supplemental Channel Radio Configuration
    FOR_SCH_RC$_S$[1] to NULL.

- + Set the Forward Supplemental Channel Coding Type $FOR\_SCH\_CODING_S[1]$ to NULL.
- + Set $QOF\_ID_S[1][SCCL\_INDEX_S][i]$ to NULL, for all integer values of i from 0 to 15.
- + Set $FOR\_SCH\_CC\_INDEX_S$ $[1][SCCL\_INDEX_S][i]$ to NULL, for all integer values of i from 0 to 15.

– Call Origination Transaction Identifier (TAG_S = '0000').

– Default Reverse Supplemental Channel Configuration parameters:

- + $REV\_WALSH\_ID_S[0][0000] = 1$
- + $REV\_WALSH\_ID_S[0][0001] = 1$
- + $REV\_WALSH\_ID_S[0][0010] = 1$
- + $REV\_WALSH\_ID_S[0][0011] = 1$
- + $REV\_WALSH\_ID_S[0][0100] = 0$
- + $REV\_WALSH\_ID_S[0][0101] = 0$
- + $REV\_WALSH\_ID_S[0][0110] = 0$
- + $REV\_WALSH\_ID_S[1][0000] = 1$
- + $REV\_WALSH\_ID_S[1][0001] = 1$
- + $REV\_WALSH\_ID_S[1][0010] = 1$
- + $REV\_WALSH\_ID_S[1][0011] = 0$
- + $REV\_WALSH\_ID_S[1][0100] = 0$
- + $REV\_WALSH\_ID_S[1][0101] = 0$
- + $REV\_WALSH\_ID_S[1][0110] = 0$
- + Set the Reverse Supplemental Channel frame length $REV\_SCH\_FRAME\_LENGTH_S[0]$ to NULL.
- + Set the Reverse Supplemental Channel Multiplex Option $REV\_SCH\_MUX_S[0]$ to NULL.
- + Set the Reverse Supplemental Channel Radio Configuration $REV\_SCH\_RC_S[0]$ to NULL.
- + Set the Reverse Supplemental Channel Coding Type $REV\_SCH\_CODING_S[0]$ to NULL.
- + Set the Reverse Supplemental Channel frame length $REV\_SCH\_FRAME\_LENGTH_S[1]$ to NULL.
- + Set the Reverse Supplemental Channel Multiplex Option $REV\_SCH\_MUX_S[1]$ to NULL.

+ Set the Reverse Supplemental Channel Radio Configuration $REV\_SCH\_RC_S[1]$ to NULL.
+ Set the Reverse Supplemental Channel Coding Type $REV\_SCH\_CODING_S[1]$ to NULL.

- If $P\_REV\_IN\_USE_S$ is greater than six and the $ASSIGN\_MODE_r$ field of the *Channel Assignment Message* or *Extended Channel Assignment Message* is equal to '000' or '100', then the mobile station shall initialize the logical to physical mapping table (LOGICAL_TO_PHYSICAL_MAPPING_TABLE) according to the requirements in Table 2.6.4.2-1:

Table 2.6.4.2-1. Default Logical to Physical Mapping Table, $ASSIGN\_MODE_r$ equal to '000' or '100'

SR_ID	LOGICAL_ RESOURCE	PHYSICAL_ RESOURCE	FORWARD_ FLAG	REVERSE_ FLAG	PRIORITY
000	0001	(shall be set according to requirement 2)	1	1	0000
(shall be set according to requirement 1)	0000	(shall be set according to requirement 3)	1	1	0000

Where requirement 1 is as follows:

+ The SR_ID field shall be set to NULL.

Requirement 2 is as follows:

+ If CH_IND_S is equal to '01', the PHYSICAL_RESOURCE field shall be set to '0000'.
+ If CH_IND_S is equal to '10', the PHYSICAL_RESOURCE field shall be set to '0001'.
+ If CH_IND_S is equal to '11', there shall be two entries in the default LPM table where the PHYSICAL_RESOURCE field shall be set to '0000' and '0001' respectively.

Requirement 3 is as follows:

+ If CH_IND_S is equal to '01':
  - o If the Radio Configuration in use is less than three, the PHYSICAL_RESOURCE field shall be set to '0000'; otherwise, there shall be three entries in the default LPM table where the PHYSICAL_RESOURCE field shall be set to '0000', '0010', and '0011' respectively.
+ If CH_IND_S is equal to '10':
  - o There shall be three entries in the default LPM table where the PHYSICAL_RESOURCE field shall be set to '0001', '0010', and '0011' respectively.
+ If CH_IND_S is equal to '11':
  - o There shall be four entries in the default LPM table where the PHYSICAL_RESOURCE field shall be set to '0000', '0001', '0010', and '0011' respectively.

- If the $ASSIGN\_MODE_r$ field of the *Extended Channel Assignment Message* is equal to '101', then the mobile station shall initialize the logical to physical mapping table (LOGICAL_TO_PHYSICAL_MAPPING_TABLE) according to the requirements in Table 2.6.4.2-2:

Table 2.6.4.2-2. Default Logical to Physical Mapping Table, $ASSIGN\_MODE_r$ equal to '101'

SR_ID	LOGICAL_ RESOURCE	PHYSICAL_ RESOURCE	FORWARD_ FLAG	REVERSE_ FLAG	PRIORITY
000	0001	(shall be set according to requirement 2)	(shall be set according to requirement 2)	(shall be set according to requirement 2)	0000
(shall be set according to requirement 1)	0000	(shall be set according to requirement 3)	(shall be set according to requirement 3)	(shall be set according to requirement 3)	0000

Where requirement 1 is as follows:

+ The SR_ID field shall be set to NULL.

Requirement 2 is as follows:

+ If $EXT\_CH\_IND_S$ is equal to '00001', then there shall be two entries in the default LPM table where the mobile station shall set:

- o PHYSICAL_RESOURCE to ‘0100’, FORWARD_FLAG to ‘1’, and REVERSE_FLAG to ‘0’ for the first entry, and
- o PHYSICAL_RESOURCE to ‘0000’, FORWARD_FLAG to ‘0’, and REVERSE_FLAG to ‘1’ for the second entry.

+ If $EXT\_CH\_IND_S$ is equal to ‘00010’, then there shall be two entries in the default LPM table where the mobile station shall set:
  - o PHYSICAL_RESOURCE to ‘0100’, FORWARD_FLAG to ‘1’, and REVERSE_FLAG to ‘0’ for the first entry, and
  - o PHYSICAL_RESOURCE to ‘0001’, FORWARD_FLAG to ‘0’, and REVERSE_FLAG to ‘1’ for the second entry.
+ If $EXT\_CH\_IND_S$ is equal to ‘00011’, then the mobile station shall set PHYSICAL_RESOURCE to ‘0000’, FORWARD_FLAG to ‘1’, and REVERSE_FLAG to ‘1’.
+ If $EXT\_CH\_IND_S$ is equal to ‘00100’, then the mobile station shall set PHYSICAL_RESOURCE to ‘0001’, FORWARD_FLAG to ‘1’, and REVERSE_FLAG to ‘1’.
+ If $EXT\_CH\_IND_S$ is equal to ‘00101’, then there shall be two entries in the default LPM table where the mobile station shall set:
  - o PHYSICAL_RESOURCE to ‘0000’, FORWARD_FLAG to ‘1’, and REVERSE_FLAG to ‘1’ for the first entry, and
  - o PHYSICAL_RESOURCE to ‘0001’, FORWARD_FLAG to ‘0’, and REVERSE_FLAG to ‘1’ for the second entry.
+ If $EXT\_CH\_IND_S$ is equal to ‘00110’, then there shall be two entries in the default LPM table where the mobile station shall set:
  - o PHYSICAL_RESOURCE to ‘0000’, FORWARD_FLAG to ‘1’, and REVERSE_FLAG to ‘1’ for the first entry, and
  - o PHYSICAL_RESOURCE to ‘0001’, FORWARD_FLAG to ‘1’, and REVERSE_FLAG to ‘1’ for the second entry.
+ If $EXT\_CH\_IND_S$ is equal to ‘01000’, then the mobile station shall set PHYSICAL_RESOURCE to ‘0100’, FORWARD_FLAG to ‘1’, and REVERSE_FLAG to ‘1’.
+ If $EXT\_CH\_IND_S$ is equal to ‘01001’, then there shall be two entries in the default LPM table where the mobile station shall set:
  - o PHYSICAL_RESOURCE to ‘0100’, FORWARD_FLAG to ‘1’, and REVERSE_FLAG to ‘1’ for the first entry, and
  - o PHYSICAL_RESOURCE to ‘0000’, FORWARD_FLAG to ‘0’, and REVERSE_FLAG to ‘1’ for the second entry.
+ If $EXT\_CH\_IND_S$ is equal to ‘01010’, then there shall be two entries in the default LPM table where the mobile station shall set:

- o PHYSICAL_RESOURCE to ‘0100’, FORWARD_FLAG to ‘1’, and REVERSE_FLAG to ‘1’ for the first entry, and
- o PHYSICAL_RESOURCE to ‘0001’, FORWARD_FLAG to ‘0’, and REVERSE_FLAG to ‘1’ for the second entry.

+ If $EXT\_CH\_IND_S$ is equal to ‘01011’, then there shall be two entries in the default LPM table where the mobile station shall set:
  - o PHYSICAL_RESOURCE to ‘0100’, FORWARD_FLAG to ‘0’, and REVERSE_FLAG to ‘1’ for the first entry, and
  - o PHYSICAL_RESOURCE to ‘0000’, FORWARD_FLAG to ‘1’, and REVERSE_FLAG to ‘1’ for the second entry.
+ If $EXT\_CH\_IND_S$ is equal to ‘01100’, then there shall be two entries in the default LPM table where the mobile station shall set:
  - o PHYSICAL_RESOURCE to ‘0100’, FORWARD_FLAG to ‘0’, and REVERSE_FLAG to ‘1’ for the first entry, and
  - o PHYSICAL_RESOURCE to ‘0001’, FORWARD_FLAG to ‘1’, and REVERSE_FLAG to ‘1’ for the second entry.
+ If $EXT\_CH\_IND_S$ is equal to ‘01101’, then there shall be three entries in the default LPM table where the mobile station shall set:
  - o PHYSICAL_RESOURCE to ‘0100’, FORWARD_FLAG to ‘0’, and REVERSE_FLAG to ‘1’ for the first entry, and
  - o PHYSICAL_RESOURCE to ‘0000’, FORWARD_FLAG to ‘1’, and REVERSE_FLAG to ‘1’ for the second entry, and
  - o PHYSICAL_RESOURCE to ‘0001’, FORWARD_FLAG to ‘0’, and REVERSE_FLAG to ‘1’ for the third entry.
+ If $EXT\_CH\_IND_S$ is equal to ‘01110’, then there shall be three entries in the default LPM table where the mobile station shall set:
  - o PHYSICAL_RESOURCE to ‘0100’, FORWARD_FLAG to ‘0’, and REVERSE_FLAG to ‘1’ for the first entry, and
  - o PHYSICAL_RESOURCE to ‘0000’, FORWARD_FLAG to ‘1’, and REVERSE_FLAG to ‘1’ for the second entry, and
  - o PHYSICAL_RESOURCE to ‘0001’, FORWARD_FLAG to ‘1’, and REVERSE_FLAG to ‘1’ for the third entry.

Requirement 3 is as follows:

+ If $EXT\_CH\_IND_S$ is equal to ‘00001’, then there shall be four entries in the default LPM table where the mobile station shall set:
  - o PHYSICAL_RESOURCE to ‘0000’, FORWARD_FLAG to ‘0’, and REVERSE_FLAG to ‘1’ for the first entry,

- o PHYSICAL_RESOURCE to ‘0010’, FORWARD_FLAG to ‘0’, and REVERSE_FLAG to ‘1’ for the second entry,
- o PHYSICAL_RESOURCE to ‘0011’, FORWARD_FLAG to ‘0’, and REVERSE_FLAG to ‘1’ for the third entry, and
- o PHYSICAL_RESOURCE to ‘0100’, FORWARD_FLAG to ‘1’, and REVERSE_FLAG to ‘0’ for the fourth entry.

+ If $EXT\_CH\_IND_S$ is equal to ‘00010’, then there shall be four entries in the default LPM table where the mobile station shall set:
  - o PHYSICAL_RESOURCE to ‘0001’, FORWARD_FLAG to ‘0’, and REVERSE_FLAG to ‘1’ for the first entry,
  - o PHYSICAL_RESOURCE to ‘0010’, FORWARD_FLAG to ‘0’, and REVERSE_FLAG to ‘1’ for the second entry,
  - o PHYSICAL_RESOURCE to ‘0011’, FORWARD_FLAG to ‘0’, and REVERSE_FLAG to ‘1’ for the third entry, and
  - o PHYSICAL_RESOURCE to ‘0100’, FORWARD_FLAG to ‘1’, and REVERSE_FLAG to ‘0’ for the fourth entry.

+ If $EXT\_CH\_IND_S$ is equal to ‘00011’, then there shall be four entries in the default LPM table where the mobile station shall set:
  - o PHYSICAL_RESOURCE to ‘0000’, FORWARD_FLAG to ‘1’, and REVERSE_FLAG to ‘1’ for the first entry,
  - o PHYSICAL_RESOURCE to ‘0010’, FORWARD_FLAG to ‘1’, and REVERSE_FLAG to ‘1’ for the second entry,
  - o PHYSICAL_RESOURCE to ‘0011’, FORWARD_FLAG to ‘1’, and REVERSE_FLAG to ‘1’ for the third entry, and
  - o PHYSICAL_RESOURCE to ‘0100’, FORWARD_FLAG to ‘1’, and REVERSE_FLAG to ‘0’ for the fourth entry.

+ If $EXT\_CH\_IND_S$ is equal to ‘00100’, then there shall be four entries in the default LPM table where the mobile station shall set:
  - o PHYSICAL_RESOURCE to ‘0001’, FORWARD_FLAG to ‘1’, and REVERSE_FLAG to ‘1’ for the first entry,
  - o PHYSICAL_RESOURCE to ‘0010’, FORWARD_FLAG to ‘1’, and REVERSE_FLAG to ‘1’ for the second entry,
  - o PHYSICAL_RESOURCE to ‘0011’, FORWARD_FLAG to ‘1’, and REVERSE_FLAG to ‘1’ for the third entry, and
  - o PHYSICAL_RESOURCE to ‘0100’, FORWARD_FLAG to ‘1’, and REVERSE_FLAG to ‘0’ for the fourth entry.

+ If $EXT\_CH\_IND_S$ is equal to ‘00101’, then there shall be five entries in the default LPM table where the mobile station shall set:

- o PHYSICAL_RESOURCE to ‘0000’, FORWARD_FLAG to ‘1’, and REVERSE_FLAG to ‘1’ for the first entry,
- o PHYSICAL_RESOURCE to ‘0001’, FORWARD_FLAG to ‘0’, and REVERSE_FLAG to ‘1’ for the second entry,
- o PHYSICAL_RESOURCE to ‘0010’, FORWARD_FLAG to ‘1’, and REVERSE_FLAG to ‘1’ for the third entry,
- o PHYSICAL_RESOURCE to ‘0011’, FORWARD_FLAG to ‘1’, and REVERSE_FLAG to ‘1’ for the fourth entry, and
- o PHYSICAL_RESOURCE to ‘0100’, FORWARD_FLAG to ‘1’, and REVERSE_FLAG to ‘0’ for the fifth entry.

+ If $EXT\_CH\_IND_S$ is equal to ‘00110’, then there shall be five entries in the default LPM table where the mobile station shall set:
  - o PHYSICAL_RESOURCE to ‘0000’, FORWARD_FLAG to ‘1’, and REVERSE_FLAG to ‘1’ for the first entry,
  - o PHYSICAL_RESOURCE to ‘0001’, FORWARD_FLAG to ‘1’, and REVERSE_FLAG to ‘1’ for the second entry,
  - o PHYSICAL_RESOURCE to ‘0010’, FORWARD_FLAG to ‘1’, and REVERSE_FLAG to ‘1’ for the third entry,
  - o PHYSICAL_RESOURCE to ‘0011’, FORWARD_FLAG to ‘1’, and REVERSE_FLAG to ‘1’ for the fourth entry, and
  - o PHYSICAL_RESOURCE to ‘0100’, FORWARD_FLAG to ‘1’, and REVERSE_FLAG to ‘0’ for the fifth entry.

+ If $EXT\_CH\_IND_S$ is equal to ‘01000’, then there shall be one entry in the default LPM table where the mobile station shall set:
  - o PHYSICAL_RESOURCE to ‘0100’, FORWARD_FLAG to ‘1’, and REVERSE_FLAG to ‘1’ for the third entry:

+ If $EXT\_CH\_IND_S$ is equal to ‘01001’, then there shall be two entries in the default LPM table where the mobile station shall set:
  - o PHYSICAL_RESOURCE to ‘0000’, FORWARD_FLAG to ‘0’, and REVERSE_FLAG to ‘1’ for the first entry,
  - o PHYSICAL_RESOURCE to ‘0100’, FORWARD_FLAG to ‘1’, and REVERSE_FLAG to ‘1’ for the fourth entry.

+ If $EXT\_CH\_IND_S$ is equal to ‘01010’, then there shall be four entries in the default LPM table where the mobile station shall set:
  - o PHYSICAL_RESOURCE to ‘0001’, FORWARD_FLAG to ‘0’, and REVERSE_FLAG to ‘1’ for the first entry,
  - o PHYSICAL_RESOURCE to ‘0100’, FORWARD_FLAG to ‘1’, and REVERSE_FLAG to ‘1’ for the fourth entry.

- If $EXT\_CH\_IND_S$ is equal to '01011', then there shall be four entries in the default LPM table where the mobile station shall set:
  - PHYSICAL_RESOURCE to '0000', FORWARD_FLAG to '1', and REVERSE_FLAG to '1' for the first entry,
  - PHYSICAL_RESOURCE to '0010', FORWARD_FLAG to '1', and REVERSE_FLAG to '0' for the second entry,
  - PHYSICAL_RESOURCE to '0011', FORWARD_FLAG to '1', and REVERSE_FLAG to '0' for the third entry, and
  - PHYSICAL_RESOURCE to '0100', FORWARD_FLAG to '1', and REVERSE_FLAG to '1' for the fourth entry.
- If $EXT\_CH\_IND_S$ is equal to '01100', then there shall be four entries in the default LPM table where the mobile station shall set:
  - PHYSICAL_RESOURCE to '0001', FORWARD_FLAG to '1', and REVERSE_FLAG to '1' for the first entry,
  - PHYSICAL_RESOURCE to '0010', FORWARD_FLAG to '1', and REVERSE_FLAG to '0' for the second entry,
  - PHYSICAL_RESOURCE to '0011', FORWARD_FLAG to '1', and REVERSE_FLAG to '0' for the third entry, and
  - PHYSICAL_RESOURCE to '0100', FORWARD_FLAG to '1', and REVERSE_FLAG to '1' for the fourth entry.
- If $EXT\_CH\_IND_S$ is equal to '01101', then there shall be five entries in the default LPM table where the mobile station shall set:
  - PHYSICAL_RESOURCE to '0000', FORWARD_FLAG to '1', and REVERSE_FLAG to '1' for the first entry,
  - PHYSICAL_RESOURCE to '0001', FORWARD_FLAG to '0', and REVERSE_FLAG to '1' for the second entry,
  - PHYSICAL_RESOURCE to '0010', FORWARD_FLAG to '1', and REVERSE_FLAG to '0' for the third entry,
  - PHYSICAL_RESOURCE to '0011', FORWARD_FLAG to '1', and REVERSE_FLAG to '0' for the fourth entry, and
  - PHYSICAL_RESOURCE to '0100', FORWARD_FLAG to '1', and REVERSE_FLAG to '1' for the fifth entry.
- If $EXT\_CH\_IND_S$ is equal to '01110', then there shall be five entries in the default LPM table where the mobile station shall set:
  - PHYSICAL_RESOURCE to '0000', FORWARD_FLAG to '1', and REVERSE_FLAG to '1' for the first entry,
  - PHYSICAL_RESOURCE to '0001', FORWARD_FLAG to '1', and REVERSE_FLAG to '1' for the second entry,

- PHYSICAL_RESOURCE to ‘0010’, FORWARD_FLAG to ‘1’, and REVERSE_FLAG to ‘0’ for the third entry,
- PHYSICAL_RESOURCE to ‘0011’, FORWARD_FLAG to ‘1’, and REVERSE_FLAG to ‘0’ for the fourth entry, and
- PHYSICAL_RESOURCE to ‘0100’, FORWARD_FLAG to ‘1’, and REVERSE_FLAG to ‘1’ for the fifth entry.

- If $P\_REV\_IN\_USE_S$ is equal to or less than six, the mobile station shall initialize the logical to physical mapping table (LOGICAL_TO_PHYSICAL_MAPPING_TABLE) as follows:
  - Default number of Logical-to-Physical Mapping entries ($NUM\_LPM\_ENTRIES_S$ = ‘0100’)
  - Default Table(0) Logical-to-Physical Mapping service reference identifier (LOGICAL_TO_PHYSICAL_MAPPING_TABLE[0].SR_ID_S = ‘000’)
  - Default Table(0) Logical-to-Physical Mapping logical resource identifier (LOGICAL_TO_PHYSICAL_MAPPING_TABLE[0].$LOGICAL\_RESOURCE_S$ = ‘0001’)
  - Default Table(0) Logical-to-Physical Mapping physical resource identifier:
    - If CH_IND_S is equal to ‘01’ or ‘11’, the mobile station shall set LOGICAL_TO_PHYSICAL_MAPPING_TABLE[0].$PHYSICAL\_RESOURCE_S$ to ‘0000’.
    - If CH_IND_S is equal to ‘10’, the mobile station shall set LOGICAL_TO_PHYSICAL_MAPPING_TABLE[0].$PHYSICAL\_RESOURCE_S$ to ‘0001’.
  - Default Table(0) Logical-to-Physical Mapping forward mapping indicator (LOGICAL_TO_PHYSICAL_MAPPING_TABLE[0].$FORWARD\_FLAG_S$ = ‘1’)
  - Default Table(0) Logical-to-Physical Mapping reverse mapping indicator (LOGICAL_TO_PHYSICAL_MAPPING_TABLE[0].$REVERSE\_FLAG_S$ = ‘1’)
  - Default Table(0) Logical-to-Physical Mapping priority (LOGICAL_TO_PHYSICAL_MAPPING_TABLE[0].$PRIORITY_S$ = ‘0000’)
  - Default Table(1) Logical-to-Physical Mapping service reference identifier (LOGICAL_TO_PHYSICAL_MAPPING_TABLE[1].SR_ID_S = ‘001’)
  - Default Table(1) Logical-to-Physical Mapping logical resource identifier (LOGICAL_TO_PHYSICAL_MAPPING_TABLE[1].$LOGICAL\_RESOURCE_S$ = ‘0000’)
  - Default Table(1) Logical-to-Physical Mapping physical resource identifier:
    - If CH_IND_S is equal to ‘01’ or ‘11’, the mobile station shall set LOGICAL_TO_PHYSICAL_MAPPING_TABLE[1].$PHYSICAL\_RESOURCE_S$ to ‘0000’.

+ If CH_IND_S is equal to '10', the mobile station shall set $LOGICAL\_TO\_PHYSICAL\_MAPPING\_TABLE[1].PHYSICAL\_RESOURCE_S$ to '0001'.

– Default Table(1) Logical-to-Physical Mapping forward mapping indicator ($LOGICAL\_TO\_PHYSICAL\_MAPPING\_TABLE[1].FORWARD\_FLAG_S$ = '1')

– Default Table(1) Logical-to-Physical Mapping reverse mapping indicator ($LOGICAL\_TO\_PHYSICAL\_MAPPING\_TABLE[1].REVERSE\_FLAG_S$ = '1')

– Default Table(1) Logical-to-Physical Mapping priority ($LOGICAL\_TO\_PHYSICAL\_MAPPING\_TABLE[1].PRIORITY_S$ = '0000')

– Default Table(2) Logical-to-Physical Mapping service reference identifier ($LOGICAL\_TO\_PHYSICAL\_MAPPING\_TABLE[2].SR\_ID_S$ = '001')

– Default Table(2) Logical-to-Physical Mapping logical resource identifier ($LOGICAL\_TO\_PHYSICAL\_MAPPING\_TABLE[2].LOGICAL\_RESOURCE_S$ = '0000')

– Default Table(2) Logical-to-Physical Mapping physical resource identifier ($LOGICAL\_TO\_PHYSICAL\_MAPPING\_TABLE[2].PHYSICAL\_RESOURCE_S$ to '0010').

– Default Table(2) Logical-to-Physical Mapping forward mapping indicator ($LOGICAL\_TO\_PHYSICAL\_MAPPING\_TABLE[2].FORWARD\_FLAG_S$ = '1')

– Default Table(2) Logical-to-Physical Mapping reverse mapping indicator ($LOGICAL\_TO\_PHYSICAL\_MAPPING\_TABLE[2].REVERSE\_FLAG_S$ = '1')

– Default Table(2) Logical-to-Physical Mapping priority ($LOGICAL\_TO\_PHYSICAL\_MAPPING\_TABLE[2].PRIORITY_S$ = '0000')

– Default Table(3) Logical-to-Physical Mapping service reference identifier ($LOGICAL\_TO\_PHYSICAL\_MAPPING\_TABLE[3].SR\_ID_S$ = '001')

– Default Table(3) Logical-to-Physical Mapping logical resource identifier ($LOGICAL\_TO\_PHYSICAL\_MAPPING\_TABLE[3].LOGICAL\_RESOURCE_S$ = '0000')

– Default Table(3) Logical-to-Physical Mapping physical resource identifier ($LOGICAL\_TO\_PHYSICAL\_MAPPING\_TABLE[2].PHYSICAL\_RESOURCE_S$ to '0011').

– Default Table(3) Logical-to-Physical Mapping forward mapping indicator ($LOGICAL\_TO\_PHYSICAL\_MAPPING\_TABLE[3].FORWARD\_FLAG_S$ = '1')

– Default Table(3) Logical-to-Physical Mapping reverse mapping indicator ($LOGICAL\_TO\_PHYSICAL\_MAPPING\_TABLE[3].REVERSE\_FLAG_S$ = '1')

– Default Table(3) Logical-to-Physical Mapping priority ($LOGICAL\_TO\_PHYSICAL\_MAPPING\_TABLE[3].PRIORITY_S$ = '0000')

- If $BCMC\_ON\_TRAFFIC\_SUP_S$ is set to '1', the mobile station shall set $AUTO\_REQ\_TRAF\_ALLOWED\_IND_S$ to '1'.
- The mobile station shall disable the $T_{MS\_Slotted}$ timer, and set $SLOTTED_S$ to YES.

- The mobile station shall set $REV\_SPICH\_EP\_SIZE_S$ to 5.
- If $FOR\_PDCH\_PARMS\_INCL_S$ is equal to '0', the mobile station shall perform the following:
  - The mobile station shall set $RLGAIN\_ACKCH\_PILOT_S$ to 0.
  - The mobile station shall set $RLGAIN\_CQICH\_PILOT_S$ to 0.
- If $REV\_PDCH\_PARMS\_INCL_S$ is equal to '0', the mobile station shall perform the following:
  - The mobile station shall set $RLGAIN\_SPICH\_PILOT_S$ to 0.
  - The mobile station shall set $RLGAIN\_REQCH\_PILOT_S$ to 0.
  - The mobile station shall set $RLGAIN\_PDCCH\_PILOT_S$ to 0.
  - The mobile station shall set $REV\_PDCH\_MAX\_AUTO\_TPR_S$ to 8 (1dB).
  - The mobile station shall set $REV\_PDCH\_MAX\_SIZE\_ALLOWED\_ENCODER\_PACKET_S$ to 9.
  - The mobile station shall set $REV\_PDCH\_DEFAULT\_PERSISTENCE_S$ to '0'.
  - The mobile station shall set $REV\_PDCH\_RESET\_PERSISTENCE_S$ to '0'.
  - The mobile station shall set $REV\_PDCH\_NUM\_ARQ\_ROUNDS\_NORMAL_S$ to 3.
  - The mobile station shall set $REV\_PDCH\_NUM\_ARQ\_ROUNDS\_BOOST_S$ to 3.
  - The mobile station shall set $REV\_PDCH\_MSIB\_SUPPORTED_S$ to '0'.
  - The mobile station shall set $REV\_PDCH\_SOFT\_SWITCHING\_RESET\_IND_S$ to '0'.
  - The mobile station shall set $REV\_PDCH\_TABLE\_SEL_S$ to '0'.
- The mobile station shall set $REV\_PDCH\_BUFFER\_SIZE_S$ to NULL.
- For i = 0 to 7, the mobile station shall set_S to $REV\_REQCH\_BUF\_QUANT\_PARM\_1_S[i]$ to NULL and $REV\_REQCH\_BUF\_QUANT\_PARM\_2_S[i]$ to NULL.
- The mobile station shall set $REV\_REQCH\_POWER\_HEADROOM\_INCREASE_S$ to NULL.
- The mobile station shall set $REV\_REQCH\_USE\_POWER\_REPORTS_S$ to NULL.
- The mobile station shall set $REV\_REQCH\_POWER\_HEADROOM\_DECREASE_S$ to NULL.
- The mobile station shall set $REV\_REQCH\_HEADROOM\_DURATION_S$ to NULL.
- The mobile station shall set $REV\_REQCH\_MAX\_POWER\_UPDATE\_DURATION_S$ to NULL.
- The mobile station shall set $REV\_PDCH\_INIT\_TARGET\_TPR_S$ to 0 (0dB).
- The mobile station shall set $REV\_PDCH\_MAX\_TARGET\_TPR_S$ to 0 (0dB).
- The mobile station shall set $REV\_PDCH\_QUICK\_START\_THRESH_S$ to 72 (9dB).

- The mobile station shall set $REV\_REQCH\_QUICK\_REPEAT\_ALLOWED_S$ to NULL.
- The mobile station shall set $REV\_PDCH\_GRANT\_PRECEDENCE_S$ to '1'.
- The mobile station shall set $REV\_PDCH\_ALWAYS\_ACK\_FINAL\_ROUND_S$ to '0'.
- For i = 1 to (11 × ($REV\_PDCH\_EP\_MAP\_LEN_r$ +1)), the mobile station shall perform the following:
  - If i <= 11, the mobile station shall perform the following:
    - The mobile station shall set $REV\_PDCH\_STEP\_UP_S[i]$ and $REV\_PDCH\_STEP\_DOWN_S[i]$ as specified on the ith row of Table 2.6.4.2-3.
  - Otherwise, the mobile station shall set $REV\_PDCH\_STEP\_UP_S[i]$ to 0, and it shall set $REV\_PDCH\_STEP\_DOWN_S[i]$ to 0.
- For i = 0 to 6, the mobile station shall perform the following:
  - $REV\_PDCH\_BOOST\_ALLOWED[i]_S$ to '0'.
  - $REV\_PDCH\_AUTO\_ALLOWED[i]_S$ to '1'.
- The mobile station shall set $REV\_REQCH\_ENABLED_S$ to '0'.
- The mobile station shall set $REV\_PDCH\_REQCH\_TRIGGER_S$ to NULL.
- The mobile station shall set $REV\_PDCH\_BOOST\_OVERSHOOT_S$ to 0.

Table 2.6.4.2-3. Default REV_PDCH_STEP_UP and REV_PDCH_STEP_DOWN tables

EP_SIZE	REV_PDCH_STEP_UP	REV_PDCH_STEP_DOWN
192	3	0
408	1.75	0.0625
792	0.9375	0.09375
1560	0.5	0.125
3096	0.28125	0.15625
4632	0.15625	0.1875
6168	0.125	0.21875
9240	0.0625	0.28125
12312	0.03125	0.375
15384	0.03125	0.59375
18456	0	0.875

- The mobile station shall set $USE\_CH\_CFG\_RRM_S$ to '0'.
- If the $ASSIGN\_MODE_r$ field from the *Channel Assignment Message* equals '000', the mobile station shall set $SERV\_NEG_S$ to disabled.
- If the $ASSIGN\_MODE_r$ field from the *Channel Assignment Message* equals '100', the mobile station shall set $SERV\_NEG_S$ to enabled.

- The mobile station shall initialize RC parameters as described in section 2.6.16.
- The mobile station shall determine the service configuration as follows:
  - If $SERV\_NEG_S$ equals disabled, the initial service configuration shall include Multiplex Option 1 and Radio Configuration 1 for both the Forward and Reverse Traffic Channels, and shall include no service option connections.
  - If $SERV\_NEG_S$ equals enabled, and if $GRANTED\_MODE_S$ equals '00', the initial service configuration shall include the multiplex option and radio configuration for the Forward and Reverse Traffic Channels as specified by $DEFAULT\_CONFIG_S$, and shall include no service option connections.
  - If $SERV\_NEG_S$ equals enabled and $GRANTED\_MODE_S$ equals '01' or '10':
    - If the mobile station enters the *Traffic Channel Initialization Substate* because of receiving the *Channel Assignment Message*, the initial service configuration shall include the default Forward and Reverse Traffic Channel multiplex options and transmission rates corresponding to the service option requested by the mobile station in the *Origination Message*, in the case of a mobile station originated call, or the *Page Response Message*, in the case of a mobile station terminated, and shall include no service option connections.
    - If the mobile station enters the *Traffic Channel Initialization Substate* because of receiving the *Extended Channel Assignment Message*, the initial service configuration shall include the default Forward and Reverse Traffic Channel multiplex options that are derived from the radio configurations corresponding to the Table 3.7.2.3.2.21-7, and shall include no service option connections.
  - If $SERV\_NEG_S$ equals enabled and $GRANTED\_MODE_S$ equals '11', the mobile station shall begin to use the stored service configuration corresponding to $SYNC\_ID_S$ as the current service configuration and shall begin to process Forward and Reverse Traffic Channel frames accordingly. The set of service option connections to be restored are determined as follows:
    - If $SR\_ID\_RESTORE_S$ equals '111', the mobile station shall restore all the service option connections from the stored service configuration.
    - If $SR\_ID\_RESTORE_S$ equals '000', the mobile station shall restore the service option connections indicated by $SR\_ID\_RESTORE\_BITMAP_S$ from the stored service configuration.
    - Otherwise, the mobile station shall restore the service option connection corresponding to $SR\_ID\_RESTORE_S$ from the stored service configuration.
  - If $SERV\_NEG_S$ equals disabled, the mobile station shall perform the following:
    - If the call is mobile station originated and the *Origination Message* requests a special service option, the mobile station shall set SO_REQ_S to the special service option number.

+ If the call is mobile station originated and the *Origination Message* does not request a special service option, the mobile station shall set SO_REQ_S to 1 (the default service option number).

+ If the call is mobile station terminated, the mobile station shall set SO_REQ_S to the service option number requested in the *Page Response Message*.

While in the *Traffic Channel Initialization Substate*, the mobile station shall perform the following:

- The mobile station shall monitor Forward Traffic Channels associated with one or more pilots in the Active Set.
- The mobile station shall perform pilot strength measurements as specified in 2.6.6.2.2, but shall not send *Pilot Strength Measurement Messages* or *Extended Pilot Strength Measurement Messages*.
- The mobile station shall perform registration timer maintenance as specified in 2.6.5.5.4.2.
- If the bits of $TMSI\_CODE_{s-p}$ are not all equal to ‘1’ and if System Time (in 80 ms units) exceeds $TMSI\_EXP\_TIME_{s-p} \times 2^{12}$, the mobile station shall set all the bits of $TMSI\_CODE_{s-p}$ to ‘1’ within T_{66m} seconds.
- If the full-TMSI timer expires or has expired, the mobile station shall set all the bits of $TMSI\_CODE_{s-p}$ to ‘1’. The mobile station shall update the registration variables as described in 2.6.5.5.2.5.
- If the Forward Packet Data Channel is assigned, whenever the mobile station transmitter is disabled, the MS shall set $FPDCH\_DTX\_INDICATOR_S$ to '1'.
- If the Forward Packet Data Channel is assigned, whenever the mobile station transmitter is enabled, the mobile station shall perform the following procedures:
  - The MS shall set $FPDCH\_DTX\_INDICATOR_S$ to '0'.
  - If the mobile station transmitter has been disabled for at least $TX\_DISABLED\_TIMER_S$, the mobile station shall send SIG-HandoffPDCH.Indication (handoff_type = ASSIGN) primitive to the MAC layer.

If the mobile station does not support the assigned CDMA Channel (see [2]) or all of the assigned Forward Traffic code channels (see [2]), the mobile station shall enter the *System Determination Substate* of the *Mobile Station Initialization* State with an error indication (see 2.6.1.1).

If the mobile station supports the assigned CDMA Channel and the assigned Forward Traffic code channels, the mobile station shall perform the following:

- The mobile station shall tune to the assigned CDMA Channel.
- The mobile station shall set its code channel for the assigned Forward Traffic code channel.

- The mobile station shall set its Forward and Reverse Traffic Channel frame offsets to the assigned frame offset as determined by $FRAME\_OFFSET_S$.
- The mobile station shall set its Forward and Reverse Traffic Channel long code masks to the public long code mask (see [2]).

If all of the following conditions are true:

- F-CPCCH is assigned, and
- $EARLY\_RL\_TRANSMIT\_IND_S$ equals '1',

the mobile station shall perform the following:

- The mobile station shall adjust its transmit power as specified in [2].
- The mobile station shall transmit the Traffic Channel preamble as specified in [2] and Layer 3 shall send an *acquiring dedicated channel* indication to Layer 2 (see [4]).
- If CH_IND_S equals '00', the mobile station shall commence R-CQICH reporting as specified in [2].
- If the mobile station receives a period of (N_{18m} x 1.25) ms with sufficient signal quality on the Forward Common Power Control Subchannel assigned to this mobile station within T_{79m} seconds after entering this substate, the mobile station shall perform the following additional functions while it remains in the *Traffic Channel Initialization Substate*:
  - The mobile station shall perform Forward Traffic Channel supervision as specified in 2.6.4.1.8. If a loss of the Forward Traffic Channel is declared, the mobile station shall enter the *System Determination Substate* of the *Mobile Station Initialization State* with a system lost indication (see 2.6.1.1).
  - The mobile station shall process Forward Traffic Channel signaling traffic and shall discard other types of Forward Traffic Channel traffic.
- If the mobile station does not receive a period of (N_{18m} x 1.25) ms with sufficient signal quality on the Forward Common Power Control Subchannel assigned to this mobile station within T_{79m} seconds after entering this substate, the mobile station shall perform the following:
  - The mobile station shall disable its transmitter.
  - The mobile station shall discard any messages queued for transmission, and those messages received and pending processing.
  - The mobile station shall remain in this substate and perform the procedures below.

If all of the following conditions are true:

- F-CPCCH is assigned, and
- EARLY_RL_TRANSMIT_IND$_S$ equals '0', or EARLY_RL_TRANSMIT_IND$_S$ equals '1' and the T_{79m} timer has expired,.

the mobile station shall perform the following:

- If the mobile station receives a period of ($N_{18m} \times 1.25$) ms with sufficient signal quality on the Forward Common Power Control Subchannel assigned to this mobile station within T_{50m} seconds after entering this substate, the mobile station shall perform the following additional functions while it remains in the *Traffic Channel Initialization Substate*:

  - The mobile station shall perform Forward Traffic Channel supervision as specified in 2.6.4.1.8. If a loss of the Forward Traffic Channel is declared, the mobile station shall enter the *System Determination Substate* of the *Mobile Station Initialization State* with a system lost indication (see 2.6.1.1).

  - The mobile station shall adjust its transmit power as specified in [2].

  - The mobile station shall transmit the Traffic Channel preamble as specified in [2], and Layer 3 shall send an *acquiring dedicated channel* indication to Layer 2 (see [4]).

  - If CH_IND$_S$ equals '00', the mobile station shall commence R-CQICH reporting as specified in [2].

  - The mobile station shall process Forward Traffic Channel signaling traffic and shall discard other types of Forward Traffic Channel traffic.

  - If Layer 3 receives a L2-Condition.Notification primitive from Layer 2 indicating an acknowledgment failure, the mobile station shall perform the following:

    + If the Direct Channel Assignment call setup procedure was used and DIRECT_CH_ASSIGN_RECOVER_IND$_S$ is set to '1', the mobile station shall perform the following:

      o If any of the following conditions is met:

        ◊ The mobile station is able to select the last pilot mobile station was monitoring before entering *Mobile Station Control on the Traffic Channel State* and the pilot has sufficient signal strength, or

        ◊ The mobile station is able to select a pilot with sufficient signal strength that is listed in NGHBR_REC_LIST, the ACCESS_ENTRY_HO field of the NGHBR_REC corresponding to the selected pilot is equal to '1' and the mobile station has sufficient information to monitor BCCH or PCH from base station corresponding to the selected pilot.

Then the mobile station shall enter the Update Overhead Information Substate of the System Access State with a direct channel assignment failure indication on the selected pilot.

- o Otherwise, the mobile station shall enter the System Determination Substate of the Mobile Station Initialization State with a system lost indication (see 2.6.1.1).

- + Otherwise, the mobile station shall disable its transmitter and enter the *System Determination Substate* of the *Mobile Station Initialization State* with a system lost indication (see 2.6.1.1).

- If the mobile station does not receive a period of ($N_{18m} \times 1.25$) ms with sufficient signal quality on the Forward Common Power Control Subchannel assigned to this mobile station within T_{50m} seconds after entering this substate, the mobile station shall perform the following:

  - If the Direct Channel Assignment call setup procedure was used and DIRECT_CH_ASSIGN_RECOVER_IND$_S$ is set to '1', the mobile station shall perform the following:

    - + If any of the following conditions is met:

      - o The mobile station is able to select the last pilot mobile station was monitoring before entering *Mobile Station Control on the Traffic Channel State* and the pilot has sufficient signal strength, or

      - o The mobile station is able to select a pilot with sufficient signal strength that is listed in NGHBR_REC_LIST, and the ACCESS_ENTRY_HO field of the NGHBR_REC corresponding to the selected pilot is equal to '1' and the mobile station has sufficient information to monitor BCCH or PCH from base station corresponding to the selected pilot.

      Then the mobile station shall enter the *Update Overhead Information Substate* of the *System Access State* with a direct channel assignment failure indication on the selected pilot.

    - + Otherwise, the mobile station shall enter the *System Determination Substate* of the *Mobile Station Initialization State* with a system lost indication (see 2.6.1.1).

  - Otherwise, the mobile station shall enter the *System Determination Substate* of the *Mobile Station Initialization State* with a system lost indication (see 2.6.1.1).

If all of the following conditions are true:

- F-CPCCH is not assigned, and
- EARLY_RL_TRANSMIT_IND$_S$ equals '1',

the mobile station shall perform the following:

- The mobile station shall adjust its transmit power as specified in [2].
- The mobile station shall transmit the Traffic Channel preamble as specified in [2], and Layer 3 shall send an acquiring dedicated channel indication to Layer 2 (see [4]).
- If CH_INDs equals '00', the mobile station shall commence R-CQICH reporting as specified in [2].
- If the mobile station receives a period of (N_{5m} x 20) ms with sufficient signal quality on the physical channel corresponding to $FPC\_PRI\_CHAN_S$ within T_{79m} seconds after entering this substate, the mobile station shall perform the following additional functions while it remains in the *Traffic Channel Initialization Substate*:
  - The mobile station shall perform Forward Traffic Channel supervision as specified in 2.6.4.1.8. If a loss of the Forward Traffic Channel is declared, the mobile station shall enter the *System Determination Substate* of the *Mobile Station Initialization State* with a system lost indication (see 2.6.1.1).
  - The mobile station shall process Forward Traffic Channel signaling traffic and shall discard other types of Forward Traffic Channel traffic.
- If the mobile station does not receive a period of (N_{5m} x 20) ms with sufficient signal quality on the physical channel corresponding to $FPC\_PRI\_CHAN_S$ within T_{79m} seconds after entering this substate, the mobile station shall perform the following:
  - The mobile station shall disable its transmitter.
  - The mobile station shall discard any messages queued for transmission, and those messages received and pending processing.
  - The mobile station shall remain in this substate and perform the procedures below.

If all of the following conditions are true:

- F-CPCCH is not assigned, and
- $EARLY\_RL\_TRANSMIT\_IND_S$ equals '0', or $EARLY\_RL\_TRANSMIT\_IND_S$ equals '1' and the T_{79m} timer has expired,

the mobile station shall perform the following:

- If the mobile station receives a period of (N_{5m} × 20) ms with sufficient signal quality on the physical channel corresponding to $FPC\_PRI\_CHAN_S$ within T_{50m} seconds after entering this substate, the mobile station shall perform the following additional functions while it remains in the *Traffic Channel Initialization Substate*:

- The mobile station shall perform Forward Traffic Channel supervision as specified in 2.6.4.1.8. If a loss of the Forward Traffic Channel is declared, the mobile station shall enter the *System Determination Substate* of the *Mobile Station Initialization State* with a system lost indication (see 2.6.1.1).
- The mobile station shall adjust its transmit power as specified in [2].
- The mobile station shall transmit the Traffic Channel preamble as specified in [2], and Layer 3 shall send an *acquiring dedicated channel* indication to Layer 2 (see [4]).
- If CH_IND_S equals '00', the mobile station shall commence R-CQICH reporting as specified in [2].
- The mobile station shall process Forward Traffic Channel signaling traffic and shall discard other types of Forward Traffic Channel traffic.
- If Layer 3 receives a L2-Condition.Notification primitive from Layer 2 indicating an acknowledgment failure, the mobile station shall perform the following:
  - If the Direct Channel Assignment call setup procedure was used and $DIRECT\_CH\_ASSIGN\_RECOVER\_IND_S$ is set to '1', the mobile station shall perform the following:
    - If any of the following conditions is met:
      - The mobile station is able to select the last pilot mobile station was monitoring before entering *Mobile Station Control on the Traffic Channel State* and the pilot has sufficient signal strength, or
      - The mobile station is able to select a pilot with sufficient signal strength that is listed in NGHBR_REC_LIST, and the ACCESS_ENTRY_HO field of the NGHBR_REC corresponding to the selected pilot is equal to '1' and the mobile station has sufficient information to monitor BCCH or PCH from base station corresponding to the selected pilot.

      Then the mobile station shall enter the *Update Overhead Information Substate* of the *System Access State* with a direct channel assignment failure indication on the selected pilot.
    - Otherwise, the mobile station shall enter the *System Determination Substate* of the *Mobile Station Initialization State* with a system lost indication (see 2.6.1.1).
  - Otherwise, the mobile station shall disable its transmitter and enter the *System Determination Substate* of the *Mobile Station Initialization State* with a system lost indication (see 2.6.1.1).

- If the mobile station does not receive a period of (N_{5m} × 20) ms with sufficient signal quality on the physical channel corresponding to $FPC\_PRI\_CHAN_S$ within T_{50m} seconds after entering this substate, the mobile station shall perform the following:

- If the Direct Channel Assignment call setup procedure was used and DIRECT_CH_ASSIGN_RECOVER_IND$_S$ is set to '1', the mobile station shall perform the following:
  - If all of the following conditions are met:
    - The mobile station is able to select the last pilot mobile station was monitoring before entering *Mobile Station Control on the Traffic Channel State* and the pilot has sufficient signal strength, or
    - The mobile station is able to select a pilot with sufficient signal strength that is listed in NGHBR_REC_LIST, and the ACCESS_ENTRY_HO field of the NGHBR_REC corresponding to the selected pilot is equal to '1' and the mobile station has sufficient information to monitor BCCH or PCH from base station corresponding to the selected pilot.

    Then the mobile station shall enter the *Update Overhead Information Substate* of the *System Access State* with a direct channel assignment failure indication on the selected pilot.
  - Otherwise, the mobile station shall enter the *System Determination Substate* of the *Mobile Station Initialization State* with a system lost indication (see 2.6.1.1).
- Otherwise, the mobile station shall enter the *System Determination Substate* of the *Mobile Station Initialization State* with a system lost indication (see 2.6.1.1).

The mobile station shall then perform the procedures specified in 2.6.4.2.2.

2.6.4.2.1 Return to Traffic Channel Initialization Substate with Initialization Failure Indication

If F-CPCCH is assigned, the mobile station shall perform the following:

- The mobile station shall perform the following functions while it remains in the *Traffic Channel Initialization Substate*:
  - The mobile station shall perform Forward Traffic Channel supervision as specified in 2.6.4.1.8. If a loss of the Forward Traffic Channel is declared, the mobile station shall enter the *System Determination Substate* of the *Mobile Station Initialization State* with a system lost indication (see 2.6.1.1).
  - The mobile station shall continue transmitting the Traffic Channel preamble as specified in [2], the mobile station shall continue R-CQICH reporting as specified in [2], and Layer 3 shall send an *acquiring dedicated channel* indication to Layer 2 (see [4]).
  - The mobile station shall process Forward Traffic Channel signaling traffic and shall discard other types of Forward Traffic Channel traffic.

- If Layer 3 receives a L2-Condition.Notification primitive from Layer 2 indicating an acknowledgment failure, the mobile station shall perform the following:
  - If the Direct Channel Assignment call setup procedure was used and DIRECT_CH_ASSIGN_RECOVER_IND$_S$ is set to '1', the mobile station shall perform the following:
    - If any of the following conditions is met:
      - The mobile station is able to select the last pilot mobile station was monitoring before entering *Mobile Station Control on the Traffic Channel State* and the pilot has sufficient signal strength, or
      - The mobile station is able to select a pilot with sufficient signal strength that is listed in NGHBR_REC_LIST, and the ACCESS_ENTRY_HO field of the NGHBR_REC corresponding to the selected pilot is equal to '1' and the mobile station has sufficient information to monitor BCCH or PCH from base station corresponding to the selected pilot.

      Then the mobile station shall enter the *Update Overhead Information Substate* of the *System Access State* with a direct channel assignment failure indication on the selected pilot.
    - Otherwise, the mobile station shall enter the *System Determination Substate* of the *Mobile Station Initialization State* with a system lost indication (see 2.6.1.1).
  - Otherwise, the mobile station shall disable its transmitter and enter the *System Determination Substate* of the *Mobile Station Initialization State* with a system lost indication (see 2.6.1.1).

If F-CPCCH is not assigned, the mobile station shall perform the following:

- The mobile station shall perform the following functions while it remains in the *Traffic Channel Initialization Substate*:
  - The mobile station shall perform Forward Traffic Channel supervision as specified in 2.6.4.1.8. If a loss of the Forward Traffic Channel is declared, the mobile station shall enter the *System Determination Substate* of the *Mobile Station Initialization State* with a system lost indication (see 2.6.1.1).
  - The mobile station shall continue transmitting the Traffic Channel preamble as specified in [2], and Layer 3 shall send an *acquiring dedicated channel* indication to Layer 2 (see [4]). Furthermore, if CH_IND$_S$ equals '00', the mobile station shall continue R-CQICH reporting as specified in [2].
  - The mobile station shall process Forward Traffic Channel signaling traffic and shall discard other types of Forward Traffic Channel traffic.
  - If Layer 3 receives a L2-Condition.Notification primitive from Layer 2 indicating an acknowledgment failure, the mobile station shall perform the following:

+ If the Direct Channel Assignment call setup procedure was used and DIRECT_CH_ASSIGN_RECOVER_IND$_S$ is set to '1', the mobile station shall perform the following:
    - o If any of the following conditions is met:
        - ◊ The mobile station is able to select the last pilot mobile station was monitoring before entering *Mobile Station Control on the Traffic Channel State* and the pilot has sufficient signal strength, or
        - ◊ The mobile station is able to select a pilot with sufficient signal strength that is listed in NGHBR_REC_LIST, and the ACCESS_ENTRY_HO field of the NGHBR_REC corresponding to the selected pilot is equal to '1' and the mobile station has sufficient information to monitor BCCH or PCH from base station corresponding to the selected pilot.

      Then the mobile station shall enter the *Update Overhead Information Substate* of the *System Access State* with a direct channel assignment failure indication on the selected pilot.
    - o Otherwise, the mobile station shall enter the *System Determination Substate* of the *Mobile Station Initialization State* with a system lost indication (see 2.6.1.1).
+ Otherwise, the mobile station shall disable its transmitter and enter the *System Determination Substate* of the *Mobile Station Initialization State* with a system lost indication (see 2.6.1.1).

The mobile station shall then perform the procedures specified in 2.6.4.2.2.

2.6.4.2.2 Exiting the Traffic Channel Initialization Substate

The mobile station should provide diversity combining of the Forward Fundicated Channels associated with pilots in the Active Set if the mobile station receives multiple pilots in the *Extended Channel Assignment Message*.

If Layer 3 does not receive a *forward dedicated channel acquired* indication from Layer 2 (see [4]) within T_{51m} seconds after the transmitter was last enabled, the mobile station shall perform the following:

- If the Direct Channel Assignment call setup procedure was used and DIRECT_CH_ASSIGN_RECOVER_IND$_S$ is set to '1', the mobile station shall perform the following:
    - If any of the following conditions is met:
        + The mobile station is able to select the last pilot mobile station was monitoring before entering *Mobile Station Control on the Traffic Channel State* and the pilot has sufficient signal strength, or

+ The mobile station is able to select a pilot with sufficient signal strength that is listed in NGHBR_REC_LIST, and the ACCESS_ENTRY_HO field of the NGHBR_REC corresponding to the selected pilot is equal to '1' and the mobile station has sufficient information to monitor BCCH or PCH from base station corresponding to the selected pilot.

Then the mobile station shall enter the *Update Overhead Information Substate* of the *System Access State* with a direct channel assignment failure indication on the selected pilot.

- Otherwise, the mobile station shall enter the *System Determination Substate* of the *Mobile Station Initialization State* with a system lost indication (see 2.6.1.1).

- Otherwise, the mobile station shall disable its transmitter and enter the *System Determination Substate* of the *Mobile Station Initialization State* with a system lost indication (see 2.6.1.1).

After the first occurrence of receiving a period of (N_{5m} $\times$ 20) ms with sufficient signal quality on the physical channel corresponding to $FPC\_PRI\_CHAN_S$ or a period of (N_{18m} $\times$ 1.25) ms with sufficient signal quality on the Forward Common Power Control Subchannel assigned to this mobile station, if one of the following conditions is met:

- Layer 3 has received a *forward dedicated channel acquired* indication from Layer 2 within T_{51m} seconds after the transmitter was last enabled, or

- The mobile station supports transmission of fixed Traffic Channel preamble, and $FIXED\_PREAMBLE\_TRANSMIT\_IND_S$ equals '1', and the mobile station has transmitted the Traffic Channel preamble for the duration corresponding to $FIXED\_NUM\_PREAMBLE_S$ as specified by the Table 3.7.2.3.2.21-13

the mobile station shall perform the following:

- If CH_IND_S is equal to '01', the mobile station shall begin transmitting on the Reverse Fundamental Channel.
- If CH_IND_S is equal to '11' and $FUNDICATED\_BCMC\_IND_S$ equals '0', or if CH_IND_S is equal to '11' and $FUNDICATED\_BCMC\_IND_S$ equals '1' and $REV\_FCH\_ASSIGNED_S$ is equal to '1', the mobile station shall begin transmitting on the Reverse Fundamental Channel.
- If CH_IND_S is equal to '10' or '11', the mobile station shall begin transmitting on the Reverse Dedicated Control Channel when the mobile station has user data or signaling traffic to send on the Reverse Dedicated Control Channel.
- If CH_IND_S equals '00', the mobile station shall perform the following:

  - If $EXT\_CH\_IND_S$ signals the allocation of a R-FCH, the mobile station shall begin transmitting on the Reverse Fundamental Channel.

- If $EXT\_CH\_IND_S$ signals the allocation of a R-DCCH, the mobile station shall begin transmitting on the Reverse Dedicated Control Channel when the mobile station has user data or signaling traffic to send on the Reverse Dedicated Control Channel.

- If $EXT\_CH\_IND_S$ signals the allocation of a R-PDCH, the mobile station shall begin transmitting on the Reverse Packet Data Channel when the mobile station has user data or signaling traffic to send on the Reverse Packet Data Channel.

- If $SERV\_NEG_S$ equals disabled, the mobile station shall activate the *SO Negotiation Subfunction*.
- If $SERV\_NEG_S$ equals enabled and the $GRANTED\_MODE_S$ is '00', '01', or '11', the mobile station shall activate the *Normal Service Subfunction*.
- If $SERV\_NEG_S$ equals enabled and the $GRANTED\_MODE_S$ is '10', the mobile station shall activate the *Waiting for Service Connect Message Subfunction*.
- The mobile station shall perform the following:

  – If $SERV\_NEG_S$ equals enabled and $GRANTED\_MODE_S$ is equal to '11', the mobile station shall perform the following:

    + The mobile station shall restore the stored service configuration as specified in 2.6.4.1.2.2.5.2.

    + For the first service option connection (with corresponding connection reference CON_REF_i) listed in this stored Service Configuration information record, Layer 3 shall instantiate a Call Control instance (as specified in 2.6.10) with the received $BYPASS\_ALERT\_ANSWER_S$. The mobile station shall identify this Call Control instances by the corresponding CON_REF_i and also identify this Call Control instance by the NULL identifier.

    + For each of the remaining service option connection (with corresponding connection reference CON_REF_i) that will be restored from the stored service configuration record, Layer 3 shall instantiate a Call Control instance (as specified in 2.6.10) with a 'restore indication'. The mobile station shall identify each of these Call Control instances by the corresponding CON_REF_i.

    + The mobile station shall store the synchronization identifier corresponding to the restored service configuration as $SYNC\_ID_S$.

  – Otherwise, the mobile station shall perform the following:

+ If the BCMC_ORIG_ONLY_IND field is not included or is included and set to '0' in the *Origination Message*, *Page Response Message*, or *Reconnect Message*, the Layer 3 shall instantiate a Call Control instance (as specified in 2.6.10) for each service instance being initiated.

+ The Layer 3 shall assign a default identifier of NULL to the Call Control instance corresponding to the SR_ID field of the *Origination Message*, *Page Response Message*, or *Reconnect Message*.

+ If $P\_REV\_IN\_USE_S$ is greater than or equal to 11, the mobile station shall set a call control timer to a value of T_{42m} seconds.

- The Layer 3 shall enter the *Traffic Channel Substate*.

2.6.4.3 Traffic Channel Substate

In this substate, the mobile station may exchange Traffic Channel frames with the base station in accordance with the current service configuration. The mobile station may perform the gating operation of Reverse Pilot Channel.

The mobile station can be in the *Active Mode* or *Control Hold Mode* while in this substate.

The following are the attributes when the mobile station is in the *Active Mode* of *Traffic Channel Substate*:

- PILOT_GATING_USE_RATE is set to '0' (i.e., the reverse pilot (r-pich) is not gated).
- Flow of data traffic is permitted by the Multiplex Sublayer.

The following are the attributes when the mobile station is in the *Control Hold Mode* of *Traffic Channel Substate*:

- PILOT_GATING_USE_RATE is set to '1'.
- The reverse pilot (r-pich) may be gated (if $PILOT\_GATING\_RATE_S$ is not equal to '00').
- If a Forward Packet Data Channel is not assigned, then the flow of data traffic is blocked by the Multiplex Sublayer.
- If a Forward Packet Data Channel is assigned, then the flow of both data traffic and signaling traffic is blocked by the Multiplex Sublayer.

Figure 2.6.4.3-1 shows the valid transitions between the modes of a *Traffic Channel Substate* when a F-PDCH is not assigned in Control Hold Mode and the over-the-air Upper Layer Signaling Messages that trigger transitions between these modes.

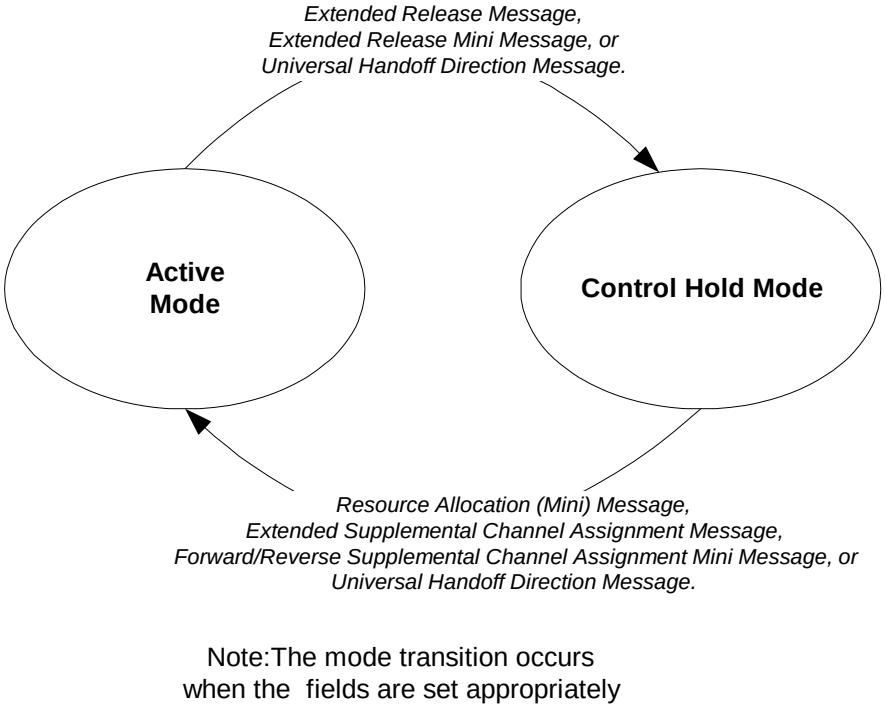

Figure 2.6.4.3-1. Mobile Station Modes When a F-PDCH is not Assigned in Control Hold Mode

Figures 2.6.4.3-2 and 2.6.4.3-3 show the valid transitions between the modes of a *Traffic Channel Substate* when a F-PDCH is assigned in Control Hold Mode and the triggers that cause transitions between these modes.

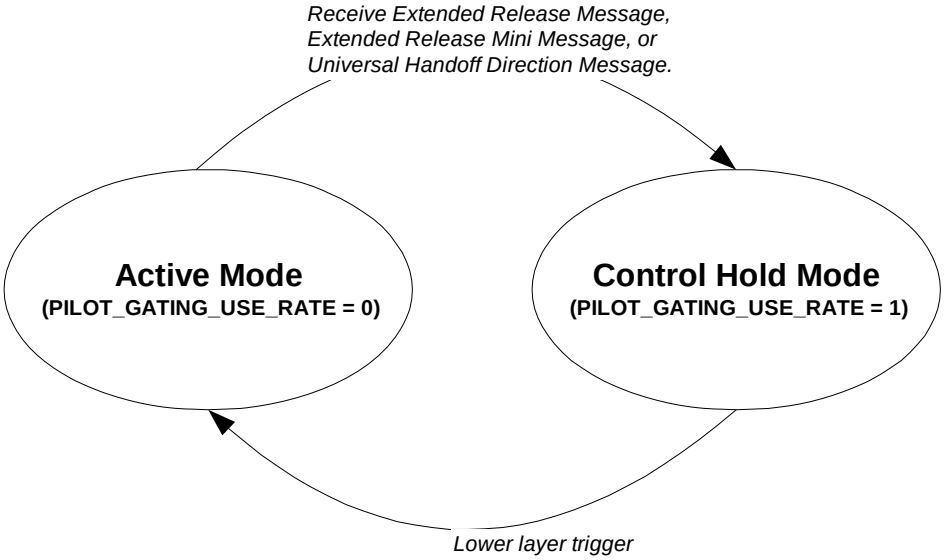

Note:The mode transition occurs
when the fields are set appropriately

Figure 2.6.4.3-2. Mobile Station Modes When a F-PDCH is Assigned in Control Hold Mode: Mobile Station Initiated Exit from Control Hold.

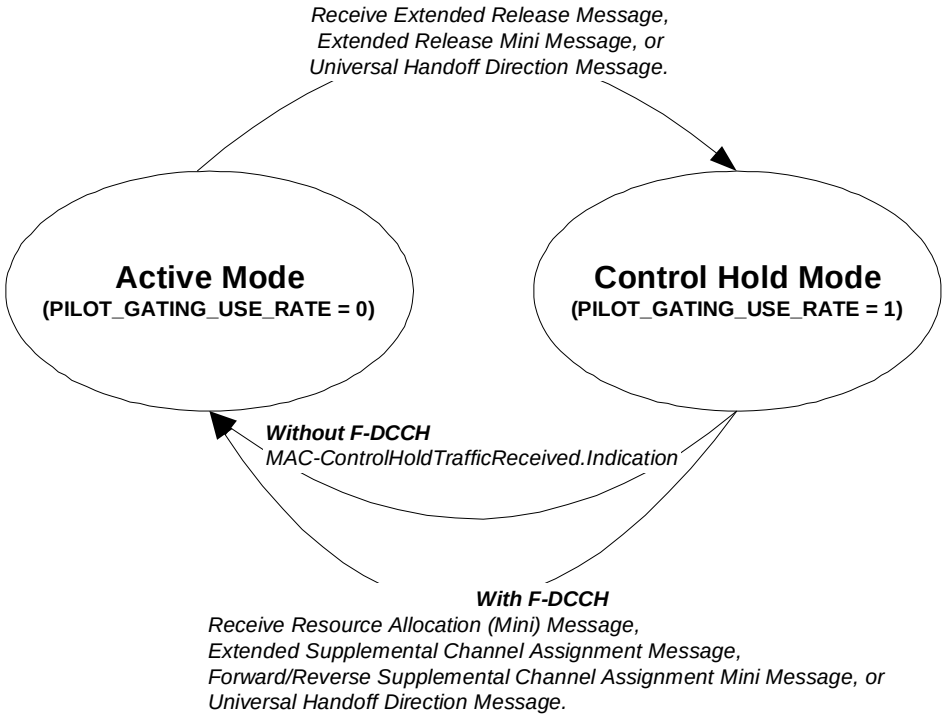

Note:The mode transition occurs when the fields are set appropriately

Figure 2.6.4.3-3. Mobile Station Modes when a F-PDCH is Assigned in Control Hold: Base Station Initiated Exit from Control Hold.

Upon entering the *Traffic Channel Substate*, the mobile station shall perform the following:

- If $SERV\_NEG_S$ equals enabled, the call is mobile station originated, and $GRANTED\_MODE_S$ is equal to '00' or '01', the mobile station should initiate service negotiation to request a service configuration in accordance with the requirements for the active service subfunction (see 2.6.4.1.2.2).

While in the *Traffic Channel Substate*, the mobile station shall perform the following:

- If $FIXED\_PREAMBLE\_TRANSMIT\_IND_S$ equals '1' and Layer 3 does not receive a *forward dedicated channel acquired* indication from Layer 2 (see [4]) within T_{80m} seconds after entering the *Traffic Channel Substate* of the *Mobile Station Control on the Traffic Channel State*, the mobile station shall set $FIXED\_PREAMBLE\_TRANSMIT\_IND_S$ to '0' and re-enter the *Traffic Channel Initialization Substate* of the *Mobile Station Control on the Traffic Channel State* with an Initialization Failure indication.
- If the call control timer expires, the mobile station shall perform the following for each call control instance without associated CON_REF:
  - The mobile station shall terminate the call control instance.
  - The mobile station shall send an indication to the affected service instance indicating that the call control instance has been terminated.

- The mobile station shall perform Forward Traffic Channel supervision as specified in 2.6.4.1.8. If a loss of the Forward Traffic Channel is declared, the Layer 3 shall terminate all Call Control instances, and shall enter the *System Determination Substate* of the *Mobile Station Initialization State* with a system lost indication (see 2.6.1.1).
- The mobile station may send a *Pilot Strength Measurement Mini Message* to report pilot strength order change information, periodic pilot strength information, or threshold based pilot strength information, as specified in the *Mobile Assisted Burst Operation Parameters Message* (see 2.6.6.2.5.2).
- The mobile station shall adjust its transmit power as specified in [2].
- The mobile station shall perform Forward Traffic Channel power control as specified in 2.6.4.1.1.
- The mobile station shall perform handoff processing as specified in 2.6.6.
- The mobile station shall process Forward and Reverse Traffic Channel frames in accordance with requirements for the active service subfunction (see 2.6.4.1.2.2).
- The mobile station shall perform registration timer maintenance as specified in 2.6.5.5.4.2.
- If the mobile station is directed to send a *Data Burst Message*, the mobile station shall send a *Data Burst Message*. If PILOT_GATING_USE_RATE is set to ‘1’, the mobile station may request to transition to the *Active Mode* (PILOT_GATING_USE_RATE set to ‘0’) prior to sending the *Data Burst Message*.
- If a Forward Packet Data Channel is not assigned and the mobile station has user data to send and PILOT_GATING_USE_RATE is equal to ‘1’, then the mobile station may send a *Resource Request Message, Resource Request Mini Message, Supplemental Channel Request Message, or Supplemental Channel Request Mini Message* to request for continuous reverse pilot transmission and user traffic transmission.
- When a Forward Packet Data Channel is assigned, PILOT_GATING_USE_RATE is equal to ‘1’, and the mobile station has data or signaling messages to send, the mobile station shall set PILOT_GATING_USE_RATE to ‘0’.
- When a Forward Packet Data Channel is assigned, PILOT_GATING_USE_RATE is equal to ‘1’, and the mobile station receives MAC-ControlHoldTrafficReceived.Indication, the mobile station shall set PILOT_GATING_USE_RATE to ‘0’ at the *transition_time* indicated in MAC-ControlHoldTrafficReceived.Indication.

- If the mobile station receives SIG-RemoveFPDCHLeg.Request(*index*), then, at the first 20 ms boundary (relative to System Time plus $FRAME\_OFFSET_S \times 1.25$ ms) occurring at least 20 ms after the reception of this indication, for the specified member of the F-PDCH reduced active set indicated by *index*, where *index* is the index of the member in the F-PDCH reduced active set, the mobile station shall perform the following procedures:
  - the mobile station shall set $FOR\_PDCH\_INCL_S$ to '0', and remove this pilot from the F-PDCH reduced active set, and
  - if this is the last pilot in the F-PDCH reduced active set, Layer 3 shall send SIG-HandoffPDCH.Indication (handoff_type = ASSIGN) to the MAC layer.
- If the mobile station is directed by the user to request a new service configuration, the mobile station shall initiate service negotiation or service option negotiation in accordance with the requirements for the active service subfunction (see 2.6.4.1.2.2).
- The mobile station may send a *Service Option Control Message* or *Service Option Control Order* to invoke a service option specific function in accordance with the requirements for the active service subfunction (see 2.6.4.1.2.2).
- If the mobile station is directed by the user to request a private long code transition and has the long code mask (see 2.3.12.3), the mobile station shall send a *Long Code Transition Request Order* (ORDQ = '00000001') in assured mode.
- If the mobile station is directed by the user to request a public long code transition, the mobile station shall send a *Long Code Transition Request Order* (ORDQ = '00000000') in assured mode.
- If the mobile station supports BCMC operation, it shall perform the procedures as specified in 2.6.13.
- If the mobile station is directed by the user to originate a call or if the mobile station is to monitor BCMC on traffic channel, the mobile station shall perform the following:
  - If this is an emergency call origination, the mobile station shall perform the following:
    - If it can be indicated to the base station within an existing Call Control instance, the mobile station shall send an indication to this Call Control instance that the user has originated an emergency call.
    - Otherwise, the mobile station shall perform the following:
      - For each service instance being initiated in the *Enhanced Origination Message*, the mobile station shall perform the following:
        - increment the stored value of TAG_S to the next unused integer value,
        - add TAG_S to the list TAG_OUTSTANDING_LIST,
        - associate the TAG_S value to the corresponding service instance. and

- ◊ set an enhanced origination timer associated with TAG_S to a value of T_{42m} seconds.

- o The mobile station shall send an *Enhanced Origination Message* to the base station, with the TAG or ADD_TAG field of each call included in the message set to its associated TAG_S.

- o Upon sending the *Enhanced Origination Message* and prior to receiving a Layer 3 response from the base station, if the mobile station is directed by the user to cancel this call, the mobile station shall perform the following:

  - ◊ The mobile station shall send a *Call Cancel Message* to the base station, with each TAG or ADD_TAG field included in the message set to the TAG value in the list TAG_OUTSTANDING_LIST corresponding to the call(s) being cancelled.

  - ◊ The mobile station shall remove the TAG field corresponding to each call being cancelled from the list TAG_OUTSTANDING_LIST.

- + If the enhanced origination timer expires, the mobile station shall remove the associated TAG field corresponding to this call from TAG_OUTSTANDING_LIST.

- Otherwise, the mobile station shall perform the following:

  - + If this is a packet data call origination[31], the mobile station shall first determine the following conditions:

    - o If $RETRY\_DELAY_S[001]$ is not 0, the mobile station shall not send the *Enhanced Origination Message* until after the system time stored in $RETRY\_DELAY_S[001]$.

    - o If $RETRY\_DELAY_S[101]$ is not 0, the mobile station shall not send the *Enhanced Origination Message* until after the system time stored in $RETRY\_DELAY_S[101]$.

  - + If this contains BCMC origination, the mobile station shall determine the following conditions:

    - o If BCMC_RETRY_DELAY_LISTs[i].RETRY_DELAY is not zero for the BCMC flow corresponding to BCMC_RETRY_DELAY_LISTs[i].BCMC_FLOW_ID, the mobile station shall not include the BCMC flow (See section 2.6.13.11) in the *Enhanced Origination Message* until after the system time stored in BCMC_RETRY_DELAY_LISTs[i].RETRY_DELAY.

---

[31] Packet data origination refers to origination with SO 60, SO 61 or any service option in Service Option Group 4 and 5 in [30]

+ If the above conditions do not prohibit the mobile station from sending an *Enhanced Origination Message* at this time, the mobile station shall perform the following:
    - o If $P\_REV\_IN\_USE_S$ is greater than or equal to 11 and the *Enhanced Origination Message* is being sent to perform packet data dormant handoff, the mobile station shall include all dormant packet data service instances (see [42]) up to the limit specified by $MAX\_ADD\_SERV\_INSTANCE_S$.
    - o For each service instance being initiated in the *Enhanced Origination Message*, the mobile station shall perform the following:
        - ◊ increment the stored value of TAG_S to the next unused integer value,
        - ◊ add TAG_S to the list TAG_OUTSTANDING_LIST,
        - ◊ associate the TAG_S value to the corresponding service instance, and
        - ◊ set an enhanced origination timer associated with TAG_S to a value of T_{42m} seconds.
    - o The mobile station shall send an *Enhanced Origination Message* to the base station, with the TAG or ADD_TAG field of each call included in the message set to its associated TAG_S.
+ Upon sending the *Enhanced Origination Message* and prior to receiving a Layer 3 response from the base station, if the mobile station is directed by the user to cancel this call, the mobile station shall perform the following:
    - o The mobile station shall send a *Call Cancel Message* to the base station, with each TAG or ADD_TAG field included in the message set to the TAG value in the list TAG_OUTSTANDING_LIST corresponding to the call(s) being cancelled.
    - o The mobile station shall disable the enhanced origination timer and shall remove the TAG field corresponding to each call being cancelled from the list TAG_OUTSTANDING_LIST.
+ If the enhanced origination timer expires, the mobile station shall remove the associated TAG field from TAG_OUTSTANDING_LIST.

• If the Layer 3 receives a “call release request” from a Call Control instance, Layer 3 shall perform the following:

- If there are no other active or pending calls, the Layer 3 shall enter the *Release Substate* with a mobile station release indication (see 2.6.4.4).

– Otherwise, the mobile station shall perform the following:

+ The mobile station shall send a Service Request Message, Resource Release *Request Message*, or a *Resource Release Request Mini Message* to the base station requesting to release the service option connection.

+ If the mobile station sends a Resource Release Request Message or a *Resource Release Request Mini Message*, it shall set the purge service indicator field to ‘0’.

- If the Layer 3 receives a request to release a BCMC call [*BCMC-Stop-Monitor.Request(BCMC_FLOW_ID)]* from Upper Layer, Layer 3 shall perform the following:
  - If there are no other active or pending calls, the Layer 3 shall enter the *Release Substate* with a mobile station release indication (see 2.6.4.4).
  - Otherwise, the mobile station shall send a *Resource Release Request Message* to the base station requesting to release the BCMC flow (See section 2.6.13.11).
- If the Layer 3 receives a “call inactive indication” from a Call Control instance, Layer 3 shall perform the following:
  - If there are no other active or pending calls, the Layer 3 shall enter the *Release Substate* with a service inactive indication (see 2.6.4.4).
  - Otherwise, the mobile station shall perform the following:
    + The mobile station shall send a Service Request Message, Resource Release Request Message, or a Resource Release Request Mini Message to the base station requesting to release the service option connection and purge the service.
    + If the mobile station sends a Resource Release Request Message or a Resource Release Request Mini Message, it shall set the purge service indicator field to ‘1’.
- If the mobile station is directed by the user to power down, the Layer 3 shall send a “release indication” to all Call Control instances, and shall enter the *Release Substate* with a power-down indication (see 2.6.4.4).
- If Layer 3 receives a L2-Condition.Notification primitive from Layer 2 indicating an acknowledgment failure, then:
  - If $RESQ\_ENABLED_S$ is equal to ‘1’ and $FPC\_PRI\_CHAN_S$ is equal to ‘0’, the mobile station shall perform the following:
    + disable its transmitter, and
    + enable the rescue delay timer with an initial value of ($RESQ\_DELAY\_TIME_S \times 80$) ms.
  - Otherwise, the layer 3 shall terminate all Call Control instances, and the mobile station shall disable its transmitter and shall enter the *System Determination Substate* of the *Mobile Station Initialization State* with a system lost indication (see 2.6.1.1).
- The mobile station shall perform the following:

- The mobile station may send the *Resource Request Message* or *Resource Request Mini Message* in accordance with requirements for the currently connected service option whenever $RETRY\_DELAY_S$[RETRY_TYPE] is equal to 0, where, RETRY_TYPE is equal to '010'.
- The mobile station shall not send the *Resource Request Message* or *Resource Request Mini Message* whenever $RETRY\_DELAY_S$[RETRY_TYPE] is set to *infinity*, where, RETRY_TYPE is equal to '010'.
- If $USE\_CH\_CFG\_RRM_S$ is equal to '0', the mobile station shall set CH_IND_INCL to '0' in the *Resource Request Message* and *Resource Request Mini Message*; otherwise, the mobile station may request a channel configuration in the *Resource Request Message* or *Resource Request Mini Message*.
- If $RETRY\_DELAY_S$[RETRY_TYPE] is not 0 or *infinity*, the mobile station shall not send the *Resource Request Message* or *Resource Request Mini Message* until after the system time stored in $RETRY\_DELAY_S$[RETRY_TYPE], where, RETRY_TYPE is equal to '010'.
- The mobile station may send the *Supplemental Channel Request Message* or *Supplemental Channel Request Mini Message* whenever $RETRY\_DELAY_S$[RETRY_TYPE] is set to '0', where, RETRY_TYPE is equal to '011'.
- The mobile station shall not send the *Supplemental Channel Request Message* or *Supplemental Channel Request Mini Message* whenever $RETRY\_DELAY_S$[RETRY_TYPE] is set to *infinity*, where, RETRY_TYPE is equal to '011'.
- If $RETRY\_DELAY_S$[RETRY_TYPE] is not 0 or *infinity*, the mobile station shall not send the *Supplemental Channel Request Message* or *Supplemental Channel Request Mini Message* until after the system time stored in $RETRY\_DELAY_S$[RETRY_TYPE], where, RETRY_TYPE is equal to '011'.
- The mobile station shall not send a Short Data Burst (see [30], [42]) whenever $RETRY\_DELAY_S$[RETRY_TYPE] is set to *infinity*, where, RETRY_TYPE is equal to '100' or '101'.
- If $RETRY\_DELAY_S$[RETRY_TYPE] is not 0 or *infinity*, where, RETRY_TYPE is equal to '100' or '101', the mobile station shall not send a Short Data Burst (see [30], [42]) until the maximum of the system time stored in $RETRY\_DELAY_S$[100] and $RETRY\_DELAY_S$[101].
- At the system time stored in $RETRY\_DELAY_S$[RETRY_TYPE], the mobile station shall reset $RETRY\_DELAY_S$[RETRY_TYPE] to 0, where RETRY_TYPE is equal to '001', '010', '011', '100' or '101'.

- The mobile station may send a *Resource Release Request Message* or a *Resource Release Request Mini Message* to request for reverse pilot gating operation to be performed or to request a service option connection to be disconnected. The mobile station may send a *Resource Release Request Message* to request one or more BCMC flows to be disconnected.

- The mobile station may send a *Shared Channel Configuration Order* (ORDQ = '00000000') to request for R-FCH assignment. The mobile station may send a *Shared Channel Configuration Order* (ORDQ = '00000001') to request release of the R-FCH.
- When the Reverse Packet Data Channel is assigned, the mobile station shall not send a *Supplemental Channel Request Message* or *Supplemental Channel Request Mini Message* containing a request for Reverse Supplemental Channel assignment.
- The mobile station may enter the *Release Substate* with a service inactive indication (see 2.6.4.4) if the service corresponding to the packet data service option instance is inactive at the mobile station.
- If Layer 3 receives a "substate timer expired indication" from a Call Control instance, the Layer 3 shall perform the following:
  - If there are no other active or pending calls, the Layer 3 shall terminate this Call Control instance; and the mobile station shall disable its transmitter and enter the *System Determination Substate* of the *Mobile Station Initialization State* with a system lost indication (see 2.6.1.1).
  - Otherwise, the mobile station shall send a *Service Request Message*, *Resource Release Request Message*, or a *Resource Release Request Mini Message*.
- If there are no active or pending calls, the Layer 3 shall enter the *Release Substate* with a mobile station release indication.
- If Layer 3 receives a 'message rejected indication' from a Call Control instance, mobile station shall send a *Mobile Station Reject Order* (ORDQ set to the applicable reason code as determined from Table 2.7.3-1) within T_{56m} seconds as follows:
  - If $P\_REV\_IN\_USE_S$ is equal to or greater than seven, the mobile station shall include the CON_REF_INCL field with this message and shall perform the following: if the corresponding Call Control instance is identified by NULL, the mobile station shall either set the CON_REF_INCL field of the message to '0' or set the CON_REF_INCL field to '1' and set the CON_REF field to the connection reference of the service option connection corresponding to this Call Control instance; otherwise, the mobile station shall set the CON_REF_INCL field of the message to '1' and the CON_REF field of the message to the connection reference of the service option connection corresponding to this Call Control instance.
- If Layer 3 is requested by the upper layers to query base station identification number, SID, NID, and LAT/LONG related information for one or more pilots, and $PILOT\_INFO\_REQ\_SUPPORTED_S$ equals '1', mobile station shall send a *Base Station Status Request Message* with a "Pilot Information" record type to the base station.

- If the mobile station needs to suspend its CDMA Traffic Channel processing for applications other than a PUF probe, hard handoff, or periodic search, then, prior to suspending its CDMA Traffic Channel processing, the mobile station shall perform the following:
  - If $CDMA\_OFF\_TIME\_REP\_SUP\_IND_S$ is equal to '1' and the total time it needs to suspend processing the CDMA Traffic Channel is longer than $CDMA\_OFF\_TIME\_REP\_THRESHOLD_S$, the mobile station shall send a *CDMA Off Time Report Message*. Otherwise, the mobile shall not send a *CDMA Off Time Report Message*.

- The mobile station may send a *CDMA Off Time Report Message* with CDMA_OFF_TIME_ENABLE set to '0' to cancel a previously reported CDMA Traffic Channel processing suspension.

- The mobile station shall update $RC\_PARAMS\_RECORD_S$ as described in section 2.6.17.

- If the mobile station performs a hard handoff, it shall initialize RC parameters as described in section 2.6.16.

- If the mobile station receives R-SCH burst assignment with RC08, then the mobile station shall perform the following:

  – Set REV_FCH_BLANKING_DUTYCYCLE_IN_USE to '000' at the start time of the burst assignment.

  – Set REV_FCH_BLANKING_DUTYCYCLE_IN_USE to $REV\_FCH\_BLANKING\_DUTYCYCLE_S$ at the end of the burst assignment.

- If the mobile station receives a message which is included in the following list and every message field value is within its permissible range, the mobile station shall process the message as described below and in accordance with the message's action time (see 2.6.4.1.5).
  1. *Alert With Information Message:* If $P\_REV\_IN\_USE_S$ is less than seven, the Layer 3 shall deliver this message to the Call Control instance; otherwise, the Layer 3 shall deliver this message to the Call Control instance identified by NULL.
  2. *Reserved*
  3. *Audit Order*
  4. *Authentication Challenge Message:* The Layer 3 shall send a "reset waiting for order substate timer indication" to all Call Control instances. The mobile station shall process the message and shall respond as specified in 2.3.12.1.4 within T_{32m} seconds, regardless of the value of $AUTH_S$.
  5. *Authentication Request Message:* The mobile station shall process the message and shall respond as specified in 2.3.12.5.2.

6. *Base Station Challenge Confirmation Order:* The Layer 3 shall send a "reset waiting for order substate timer indication" to all Call Control instances. The mobile station shall process the message and shall respond with an *SSD Update Confirmation Order* or *SSD Update Rejection Order* as specified in 2.3.12.1.5 within T_{32m} seconds.

7. *Base Station Status Response Message*: The Layer 3 shall deliver the information contained in this message to the Upper Layer entity that requested for this information.

8. *Call Assignment Message:* The mobile station shall process this message as follows:

   – If $RESPONSE\_IND_r$ equals '1', then for each of the TAG_r or ADD_TAG_r fields that matches any of the TAG values contained in the list TAG_OUTSTANDING_LIST, the mobile station shall perform the following:

     + If $ACCEPT\_IND_r$ or $ADD\_ACCEPT\_IND_r$ associated with the TAG_r or ADD_TAG_r equals '0', the mobile station shall disable the enhanced origination timer associated with TAG_r and shall remove the TAG value specified by TAG_r from the list TAG_OUTSTANDING_LIST.

     + If $ACCEPT\_IND_r$ or $ADD\_ACCEPT\_IND_r$ associated with the TAG_r or ADD_TAG_r equals '1' and $USE\_OLD\_SERV\_CONFIG_r$ field associated with this TAG is not set to '1', the mobile station shall perform the following:

       o If there already exists or currently pending instantiation a Call Control instance identified by CON_REF_r or $ADD\_CON\_REF_r$ associated with the TAG_r or ADD_TAG_r, the mobile station shall send a *Mobile Station Reject Order* with ORDQ field set to '00010010' (a call control instance is already present with the specified identifier), with the CON_REF field of the order set to the CON_REF_r or $ADD\_CON\_REF_r$.

       o Otherwise, Layer 3 shall instantiate a Call Control instance (as specified in 2.6.10) at the action time of the message. The mobile station shall identify this Call Control instance by CON_REF_r or $ADD\_CON\_REF_r$ associated with the TAG_r or ADD_TAG_r. If a service option connection corresponding to this call has not been established, the mobile station should wait for the base station to initiate service negotiation to establish the service option connection.

       o The mobile station shall disable the enhanced origination timer corresponding to this TAG and shall remove the TAG value from the list TAG_OUTSTANDING_LIST.

     + If $ACCEPT\_IND_r$ equals '1' and $USE\_OLD\_SERV\_CONFIG_r$ field is included and is set to '1', the mobile station shall perform the following:

- At the action time of this message, the mobile station shall restore the indicated service option connection record(s) from the stored service configuration, where the service option connection records to be restored are determined as follows:
  - If SR_ID_r equals '111', the mobile station shall restore all remaining service option connection records from the stored service configuration; otherwise, the mobile station shall restore the service option connection record corresponding to the SR_ID_r received in this message.
  - Layer 3 shall instantiate a Call Control instance (as specified in 2.6.10) for each of the restored service option connections with a 'restore indication' and Layer 3 shall identify each of these Call Control instances by the value of the CON_REF field corresponding to the restored service option connection.
  - The mobile station shall disable the enhanced origination timer corresponding to TAG_r and shall remove the TAG value specified by TAG_r from the list TAG_OUTSTANDING_LIST.

– If $RESPONSE\_IND_r$ equals '1', then for each of the and TAG_r or ADD_TAG_r fields that does not match with any of the TAG values contained in the list TAG_OUTSTANDING_LIST, the mobile station shall send a *Mobile Station Reject Order* with ORDQ field set to '00010011' (TAG received does not match TAG stored), with the TAG field of the order set to the TAG_r or ADD_TAG_r, and the CON_REF field of the order set to CON_REF_r or $ADD\_CON\_REF_r$.

– If $RESPONSE\_IND_r$ equals '0' and $USE\_OLD\_SERV\_CONFIG_r$ field is not included or is included and is set to '0', the mobile station shall perform the following for each of the CON_REF_r or $ADD\_CON\_REF_r$:

  + If there already exists or currently pending instantiation a Call Control instance identified by CON_REF_r or $ADD\_CON\_REF_r$, the mobile station shall send a *Mobile Station Reject Order* with ORDQ field set to '00010010' (a call control instance is already present with the specified identifier), with the CON_REF field of the order set to the CON_REF_r or $ADD\_CON\_REF_r$.

  + Otherwise, if the mobile station does not accept this call assignment, the mobile station shall send a *Mobile Station Reject Order* with ORDQ field set to '00010000' (call assignment not accepted), with the CON_REF field of the order set to the CON_REF_r or $ADD\_CON\_REF_r$.

  + Otherwise, at the action time of the message, the mobile station shall store the bypass indicator ($BYPASS\_ALERT\_ANSWER_s$ = $BYPASS\_ALERT\_ANSWER_r$) and the Layer 3 shall instantiate a Call

Control instance (as specified in 2.6.10). The mobile station shall identify this Call Control instance by the CON_REF_r or $ADD\_CON\_REF_r$. If a service option connection corresponding to this call has not been established, the mobile station should wait for the base station to initiate service negotiation to establish the service option connection.

– If $RESPONSE\_IND_r$ equals '0' and $USE\_OLD\_SERV\_CONFIG_r$ field is included and is set to '1', the mobile station shall perform the following:

+ At the action time of this message, the mobile station shall restore the indicated service option connection record(s) from the stored service configuration, where the service option connection records to be restored are determined as follows:

  o If SR_ID_r equals '111', the mobile station shall restore all remaining service option connection records from the stored service configuration; otherwise, the mobile station shall restore the service option connection record corresponding to the SR_ID_r received in this message.

+ If SR_ID_r equals '111', the mobile station shall perform the following:

  o For the first remaining service option connection (with corresponding connection reference CON_REF_i) listed in this stored Service Configuration information record, Layer 3 shall instantiate a Call Control instance (as specified in 2.6.10) with the received $BYPASS\_ALERT\_ANSWER_s$. The mobile station shall identify this Call Control instances by the corresponding CON_REF_i.

  o For each of the remaining service option connections, Layer 3 shall instantiate a Call Control instance (as specified in 2.6.10) for each of the restored service option connections with a 'restore indication' and Layer 3 shall identify each of these Call Control instances by the value of the CON_REF field corresponding to the restored service option connection.

+ If SR_ID_r is not equal to '111', Layer 3 shall instantiate a Call Control instance (as specified in 2.6.10) with the received $BYPASS\_ALERT\_ANSWER_s$ for the service option connection record corresponding to the SR_ID_r received in this message.

9. *Candidate Frequency Search Control Message:* The mobile station shall process the message as specified in 2.6.6.2.5.1.

10. *Candidate Frequency Search Request Message:* The mobile station shall process the message as specified in 2.6.6.2.5.1.

11. *Continuous DTMF Tone Order:* Support of this order by the mobile station is

optional. If $P\_REV\_IN\_USE_s$ is less than seven, the Layer 3 shall deliver this message to the Call Control instance; otherwise, the Layer 3 shall perform the following: if $CON\_REF\_INCL_r$ equals '0', the Layer 3 shall deliver this message to the Call Control instance identified by NULL; otherwise, the Layer 3 shall deliver this message to the Call Control instance identified by CON_REF_r.

12. *Data Burst Message*

13. *Extended Alert With Information Message:* The mobile station shall perform the following: If $CON\_REF\_INCL_r$ equals '0', the Layer 3 shall deliver this message to the Call Control instance identified by NULL; otherwise, the Layer 3 shall deliver this message to the Call Control instance identified by CON_REF_r.

14. *Extended Flash With Information Message:* The mobile station shall perform the following: If $CON\_REF\_INCL_r$ equals '0', the Layer 3 shall deliver this message to the Call Control instance identified by NULL; otherwise, the Layer 3 shall deliver this message to the Call Control instance identified by CON_REF_r.

15. *Extended Handoff Direction Message:* The Layer 3 shall send a "reset waiting for order substate timer indication" to all Call Control instances. The mobile station shall process the message as specified in 2.6.6.2.5.1.

16. *Extended Neighbor List Update Message:* The mobile station shall process the message as specified in 2.6.6.2.5.1.

17. *Extended Release Message:* The mobile station shall process the message as specified in 2.6.4.1.9.

18. *Extended Release Mini Message*: The mobile station shall process the message as specified in 2.6.4.1.9.

19. *Forward Supplemental Channel Assignment Mini Message:* The mobile station shall process the message as specified in 2.6.6.2.5.1.

20. *Flash With Information Message*: If $P\_REV\_IN\_USE_s$ is less than seven, the Layer 3 shall deliver this message to the Call Control instance; otherwise, the Layer 3 shall deliver this message to the Call Control instance identified by NULL.

21. *Extended Supplemental Channel Assignment Message:* The mobile station shall process the message as specified in 2.6.6.2.5.1.

22. *General Handoff Direction Message:* The Layer 3 shall send a "reset waiting for order substate timer indication" to all Call Control instances. The mobile station shall process the message as specified in 2.6.6.2.5.1.

23. *In-Traffic System Parameters Message:* The mobile station shall process the message as specified in 2.6.4.1.4.

24. *Local Control Order*

25. *Lock Until Power-Cycled Order:* The mobile station shall disable its transmitter and record the reason for the *Lock Until Power-Cycled Order* in the mobile station's semi-permanent memory ($LCKRSN\_P_{s-p}$ equals the least-significant

four bits of $ORDQ_r$). The mobile station should notify the user of the locked condition. The Layer 3 shall terminate all Call Control instances, and shall enter the *System Determination Substate* of the *Mobile Station Initialization State* with a lock indication (see 2.6.1.1), and shall not enter the *System Access State* again until after the next mobile station power-up or until it has received an *Unlock Order*. This requirement shall take precedence over any other mobile station requirement specifying entry to the *System Access State*.

26. *Long Code Transition Request Order:* The mobile station shall process the message as specified in 2.6.4.1.6.

27. *Maintenance Order:* If $P\_REV\_IN\_USE_s$ is less than seven, the Layer 3 shall deliver this message to the Call Control instance; otherwise, the Layer 3 shall perform the following: if $CON\_REF\_INCL_r$ equals '0', the Layer 3 shall deliver this message to the Call Control instance identified by NULL; otherwise, the Layer 3 shall deliver this message to the Call Control instance identified by CON_REF_r.

28. *Maintenance Required Order:* The mobile station shall record the reason for the *Maintenance Required Order* in the mobile station's semi-permanent memory ($MAINTRSN_{s-p}$ equals the least-significant four bits of $ORDQ_r$). The mobile station shall remain in the unlocked condition. The mobile station should notify the user of the maintenance required condition.

29. *Message Encryption Mode Order:* The mobile station shall process the message as specified in 2.3.12.2.

30. *Mobile Station Registered Message:* The mobile station shall process the message as specified in 2.6.5.5.4.3.

31. *Mobile Assisted Burst Operation Parameters Message:* The mobile station shall process the message as specified in 2.6.6.2.5.1.

32. *Neighbor List Update Message:* The mobile station shall process the message as specified in 2.6.6.2.5.1.

33. *Outer Loop Report Request Order*: The mobile station shall send the *Outer Loop Report Message* in assured mode to the base station.

34. *Parameter Update Order:* The Layer 3 shall send a "reset waiting for order substate timer indication" to all Call Control instances. The mobile station shall increment $COUNT_{s-p}$ (see 2.3.12.1.3). The mobile station shall send a *Parameter Update Confirmation Order* within T_{56m} seconds. The mobile station shall set the ORDQ field of the *Parameter Update Confirmation Order* to the same value as the ORDQ field of the *Parameter Update Order*.

35. *Periodic Pilot Measurement Request Order:* The mobile station shall process the order as specified in 2.6.6.2.5.1.

36. *Pilot Measurement Request Order:* The mobile station shall process the order as specified in 2.6.6.2.5.1.

37. *Power Control Message:* The mobile station shall process the message as

specified in 2.6.4.1.1.3.

38. *Power Control Parameters Message:* The mobile station shall process the message as specified in 2.6.4.1.1.2.

39. *Power Up Function Message:* The mobile station shall process the message as specified in 2.6.4.1.7.1.

40. *Power Up Function Completion Message:* The mobile station shall process the message as specified in 2.6.4.1.7.3.

41. *Rate Change Message:* The mobile station shall process the message as specified in 2.6.4.1.1.4.

42. *Release Order:* The Layer 3 shall send a "release indication" to all Call Control instances, and shall enter the *Release Substate* with a base station release indication (see 2.6.4.4).

43. *Resource Allocation Message*: The mobile station shall process the message as specified in 2.6.4.1.10.

44. *Resource Allocation Mini Me*ssage: The mobile station shall process the message as specified in 2.6.4.1.10.

45. *Retrieve Parameters Message:* The mobile station shall send, within T_{56m} seconds, a *Parameters Response Message*.

46. *Retry Order:* The mobile station shall process the order as follows:

    - If $RETRY\_TYPE_r$ is equal to '000', the mobile station shall set $RETRY\_DELAY_s$[RETRY_TYPE] to 0, where RETRY_TYPE is equal to '001', '010', '011', '100', or '101'.
    - If $RETRY\_TYPE_r$ is equal to '001', '100', or '101', then the mobile station shall perform the following:
        - If $RETRY\_DELAY_r$ is equal to '00000000', then the mobile station shall set $RETRY\_DELAY_s$ [$RETRY\_TYPE_r$] to 0.
        - If $RETRY\_DELAY_r$ is not equal to '00000000', the mobile station shall set $RETRY\_DELAY_s$[$RETRY\_TYPE_r$] as follows:
            + If the most significant bit of the $RETRY\_DELAY_r$ is 0, set $RETRY\_DELAY\_UNIT_s$ to 1000ms. If the most significant bit of the $RETRY\_DELAY_r$ is '1', set $RETRY\_DELAY\_UNIT_s$ to 60000ms.
            + The mobile station shall set $RETRY\_DELAY\_VALUE_s$ to the seven least significant bits of $RETRY\_DELAY_r$.
            + The mobile station shall store the next system time 80 ms boundary + $RETRY\_DELAY\_VALUE_s \times RETRY\_DELAY\_UNIT_s$ ms as $RETRY\_DELAY_s$[$RETRY\_TYPE_r$].
    - If $RETRY\_TYPE_r$ is equal to '010' or '011', the mobile station shall perform the following:

– If $RETRY\_DELAY_r[RETRY\_TYPE_r]$ is '00000000', then the mobile station shall set $RETRY\_DELAY_s$ $[RETRY\_TYPE_r]$ to 0.

– If $RETRY\_DELAY_r[RETRY\_TYPE_r]$ is '11111111', then the mobile station shall set $RETRY\_DELAY_s[RETRY\_TYPE_r]$ to *infinity*.

– If $RETRY\_DELAY_r[RETRY\_TYPE_r]$ is not equal to '00000000' or '11111111', the mobile station shall store the next system time 80 ms boundary + $RETRY\_DELAY_r[RETRY\_TYPE_r] \times 320$ ms as $RETRY\_DELAY_s[RETRY\_TYPE_r]$.

47. *Reverse Supplemental Channel Assignment Mini Message:* The mobile station shall process the message as specified in 2.6.6.2.5.1.

48. *Security Mode Command Message:* The mobile station shall process the message as specified in 2.6.4.1.14.

49. *Send Burst DTMF Message:* Support of this message by the mobile station is optional. If $P\_REV\_IN\_USE_s$ is less than seven, the Layer 3 shall deliver this message to the Call Control instance; otherwise, the Layer 3 shall perform the following: if $CON\_REF\_INCL_r$ equals '0', the Layer 3 shall deliver this message to the Call Control instance identified by NULL; otherwise, the Layer 3 shall deliver this message to the Call Control instance identified by CON_REF_r.

50. *Service Connect Message:* The mobile station shall process the message in accordance with the requirements for the active service subfunction (see 2.6.4.1.2.2) if the message is not rejected due to the following conditions:

- If the CC_INFO_INCL field is included in this message and is set to '1', the mobile station shall perform the following for each of the NUM_CALLS_ASSIGN call assignments included in this message:

  + If there already exists or currently pending instantiation a Call Control instance identified by CON_REF_r, the mobile station shall send a *Mobile Station Reject Order* with ORDQ field set to '00010010' (a call control instance is already present with the specified identifier), with the CON_REF field of the order set to CON_REF_r.

  + If $RESPONSE\_IND_r$ equals '1' and TAG_r does not match any of the TAG values contained in the list TAG_OUTSTANDING_LIST, the mobile station shall send a *Mobile Station Reject Order* with ORDQ field set to '00010011' (TAG received does not match TAG stored), with the TAG field of the order set to TAG_r, and the CON_REF field of the order set to CON_REF_r.

  + If the mobile station does not accept this call assignment, the mobile station shall send a *Mobile Station Reject Order* with ORDQ field set to '00010000' (call assignment not accepted), with the CON_REF field of the order set to CON_REF_r.

51. *Service Option Control Message:* The mobile station shall process the message

in accordance with the requirements for the active service subfunction (see 2.6.4.1.2.2).

52. *Service Option Control Order:* The mobile station shall process the message in accordance with the requirements for the active service subfunction (see 2.6.4.1.2.2).

53. *Service Option Request Order:* The mobile station shall process the message in accordance with the requirements for the active service subfunction (see 2.6.4.1.2.2).

54. *Service Option Response Order:* The mobile station shall process the message in accordance with the requirements for the active service subfunction (see 2.6.4.1.2.2).

55. *Service Redirection Message:* The mobile station shall process the message as follows:

If $RECORD\_TYPE_r$ is equal to '00000000', the mobile station shall perform the following:

- The mobile station shall set $RETURN\_IF\_FAIL_s = RETURN\_IF\_FAIL_r$.
- If $DELETE\_TMSI_r$ is equal to '1', the mobile station shall set all the bits of $TMSI\_CODE_{s-p}$ to '1'.
- The mobile station shall disable the full-TMSI timer.
- The Layer 3 shall send a "release indication" to all Call Control instances, and shall enter the Release Substate with an NDSS off indication (see 2.6.4.4).

If $RECORD\_TYPE_r$ is not equal to '00000000', $REDIRECT\_TYPE_r$ is '1', and the mobile station supports the band class and operating mode specified in the message, the mobile station shall perform the following:

- The mobile station shall store the redirection record received in the message as $REDIRECT\_REC_s$.
- The mobile station shall enable $NDSS\_ORIG_s$ and shall record the dialed digits (if any) corresponding to the last MS originated call.
- The mobile station shall set $RETURN\_IF\_FAIL_s = RETURN\_IF\_FAIL_r$.
- If $DELETE\_TMSI_r$ is equal to '1', the mobile station shall set all the bits of $TMSI\_CODE_{s-p}$ to '1'.
- The mobile station shall disable the full-TMSI timer.

– The Layer 3 shall send a "release indication" to all Call Control instances, and shall enter the *Release Substate* with a redirection indication (see 2.6.4.4).Otherwise, the mobile station shall discard the message and send a *Mobile Station Reject Order* (ORDQ set to the applicable reason code as determined from Table 2.7.3-1) within T_{56m} seconds.

56. *Service Request Message:* The mobile station shall process the message in

accordance with the requirements for the active service subfunction (see 2.6.4.1.2.2).

57. *Service Response Message:* The mobile station shall process the message in accordance with the requirements for the active service subfunction (see 2.6.4.1.2.2).

58. *Set Parameters Message:* If the mobile station can set all of the parameters specified by the PARAMETER_ID fields in the message, the mobile station shall set them; otherwise, the mobile station shall send, within T_{56m} seconds, a *Mobile Station Reject Order*.

59. *SSD Update Message:* The Layer 3 shall send a "reset waiting for order substate timer indication" to all Call Control instances. The mobile station shall process the message and respond with a *Base Station Challenge Order* as specified in 2.3.12.1.5 within T_{32m} seconds.

60. *Status Request Message:* The mobile station shall send, within T_{56m} seconds, a *Status Response Message*. If the message does not specify any qualification information ($QUAL\_INFO\_TYPE_r$ is equal to '00000000'), the mobile station shall include the requested information records in the *Status Response Message*. If the message specifies a band class ($QUAL\_INFO\_TYPE_r$ is equal to '00000001'), the mobile station shall only include the requested information records for the specified band class ($BAND\_CLASS_r$) in the *Status Response Message*. If the message specifies a band class and an operating mode ($QUAL\_INFO\_TYPE_r$ is equal to '00000010'), the mobile station shall only include the requested information records for the specified band class ($BAND\_CLASS_r$) and operating mode (OP_MODE_r) in the *Status Response Message*.

    If the message specifies a band class or a band class and an operating mode which is not supported by the mobile station, the mobile station shall send a *Mobile Station Reject Order* with ORDQ set to '00000110' (message requires a capability that is not supported by the mobile station).

    If the response to this message exceeds the allowable length, the mobile station shall send a *Mobile Station Reject Order* with ORDQ set to '00001000' (response message would exceed the allowable length).

    If the message specifies an information record which is not supported by the mobile station for the specified band class and operating mode, the mobile station shall send a *Mobile Station Reject Order* with ORDQ set to '00001001' (information record is not supported for the specified band class and operating mode).

61. *Status Request Order:* If $CDMABAND_s$ is equal to '00000', the mobile station shall send a *Status Message* within T_{56m} seconds. The mobile station shall respond with information corresponding to the current band class and operating mode.

62. *Supplemental Channel Assignment Message:* The mobile station shall process

the message as specified in 2.6.6.2.5.1.

63. *TMSI Assignment Message:* The mobile station shall store the TMSI zone and code as follows:

- The mobile station shall store the length of the TMSI zone field by setting $ASSIGNING\_TMSI\_ZONE\_LEN_{s-p}$ to $TMSI\_ZONE\_LEN_r$,
- The mobile station shall store the assigning TMSI zone number by setting the $ASSIGNING\_TMSI\_ZONE\_LEN_{s-p}$ least significant octets of $ASSIGNING\_TMSI\_ZONE_{s-p}$ to $TMSI\_ZONE_r$, and
- The mobile station shall store the TMSI code by setting $TMSI\_CODE_{s-p}$ to $TMSI\_CODE_r$.

The mobile station shall set the TMSI expiration time by setting $TMSI\_EXP\_TIME_{s-p}$ to $TMSI\_EXP\_TIME_r$. The mobile station shall disable the full-TMSI timer. The mobile station shall then respond with a *TMSI Assignment Completion Message* within T_{56m} seconds.

64. *Universal Handoff Direction Message:* The Layer 3 shall send a "reset waiting for order substate timer indication" to all Call Control instances. The mobile station shall process the message as specified in 2.6.6.2.5.1.

65. *User Zone Reject Message*: The mobile station shall process this message as specified in 2.6.9.2.2.

66. *User Zone Update Message*: The mobile station shall process this message as specified in 2.6.9.2.2.

67. *BCMC Order*: The mobile station shall process this message as follows:

- If $ORDQ_r$ is set to '00000000', the mobile station shall perform the following for each of the BCMC flows that the base station is responding to:
  - If $CLEAR\_ALL\_RETRY\_DELAY_r$ equals '1', the mobile station shall delete the currently stored BCMC Retry Delay List.
  - If $CLEAR\_RETRY\_DELAY_r$ equals '1', the mobile station shall delete the entry in the $BCMC\_RETRY\_DELAY\_LIST_s[i]$ corresponding to BCMC_FLOW_ID (See section 2.6.13.11) in this message.
  - If $ALL\_BCMC\_REASON_r$ or $BCMC\_REASON_r$ equals '0000', Layer 3 shall send a *BCMC-Monitor.Response(BCMC_FLOW_ID, result=FAILURE, cause= FLOW_NOT_AVAILABLE, reason_ind=CURRENT_SYS)* for each of the corresponding BCMC_FLOW_ID to the BCMC Service Layer.
  - If $ALL\_BCMC\_REASON_r$ or $BCMC\_REASON_r$ equals '0001', Layer 3 shall send a *BCMC-Monitor.Response(BCMC_FLOW_ID, result=FAILURE, cause= FLOW_NOT_TRANSMITTED, reason_ind=CURRENT_SYS)* for each of the corresponding BCMC_FLOW_ID to the BCMC Service Layer.
  - If $ALL\_BCMC\_REASON_r$ or $BCMC\_REASON_r$ equals '0010', Layer 3 shall send a *BCMC-Monitor.Response(BCMC_FLOW_ID, result=FAILURE,*

cause= FLOW_TRANSMITTED_IN_IDLE, reason_ind=CURRENT_SYS) for each of the corresponding BCMC_FLOW_ID to the BCMC Service Layer.

– If $ALL\_BCMC\_REASON_r$ or $BCMC\_REASON_r$ equals '0011', Layer 3 shall send a *BCMC-Monitor.Response*(*BCMC_FLOW_ID, result = SUCCESS, cause = REGISTRATION_ACCEPTED, reason_ind = CURRENT_SYS*) for each of the corresponding BCMC_FLOW_ID to the BCMC Service Layer.

– If $ALL\_BCMC\_REASON_r$ or $BCMC\_REASON_r$ equals '0100', Layer 3 shall send a *BCMC-Monitor.Response(BCMC_FLOW_ID, result=FAILURE, cause= AUTHORIZATION_FAILURE, reason_ind=CURRENT_SYS)* for each of the corresponding BCMC_FLOW_ID to the BCMC Service Layer.

– If $ALL\_BCMC\_REASON_r$ or $BCMC\_REASON_r$ equals '0101', the mobile station shall perform the following:

+ Layer 3 shall send a *BCMC-Monitor.Response(BCMC_FLOW_ID, result=FAILURE, cause= RETRY_LATER, reason_ind=CURRENT_SYS)* for each of the corresponding BCMC_FLOW_ID to the BCMC Service Layer.

+ For each of the corresponding BCMC_FLOW_ID, if there is a $BCMC\_RETRY\_DELAY\_LIST_s$[i].BCMC_FLOW_ID which is same as BCMC_FLOW_ID (See section 2.6.13.11), the mobile station shall set $BCMC\_RETRY\_DELAY\_LIST_s$[i].RETRY_DELAY to current system time plus $ALL\_BCMC\_RETRY\_DELAY_r$/BCMC_RETRY_DELAY; otherwise, the mobile station shall add new $BCMC\_RETRY\_DELAY\_LIST_s$[i] to the BCMC Retry Delay List and shall set $BCMC\_RETRY\_DELAY\_LIST_s$[i].BCMC_FLOW_ID to the BCMC_FLOW_ID, $BCMC\_RETRY\_DELAY\_LIST_s$[i].RETRY_DELAY to current system time plus $ALL\_BCMC\_RETRY\_DELAY_r$/$BCMC\_RETRY\_DELAY_r$.

68. *In-Traffic BCMC Service Parameters Message*: The mobile station shall process this message as follows:

The mobile station shall store the following parameters:

- Autonomous BCMC request on traffic channel allowed indicator ($AUTO\_REQ\_TRAF\_ALLOWED\_IND_s$ = $AUTO\_REQ\_TRAF\_ALLOWED\_IND_r$).

- BCMC in idle state supported indicator ($BCMC\_ON\_IDLE\_SUP\_IND_s$ = $BCMC\_ON\_IDLE\_SUP\_IND_r$).

- Only traffic state BCMC flows included indicator ($BCMC\_FLOWS\_ON\_TRAFFIC\_ONLY\_IND_s$ = $BCMC\_FLOWS\_ON\_TRAFFIC\_ONLY\_IND_r$) if $BCMC\_FLOWS\_ON\_TRAFFIC\_ONLY\_IND_r$ is included; otherwise, $BCMC\_FLOWS\_ON\_TRAFFIC\_ONLY\_IND_s$ = '1'.

- Length of time stamp for use on r-csch ($ACH\_TIME\_STAMP\_SHORT\_LENGTH_s$ = $ACH\_TIME\_STAMP\_SHORT\_LENGTH_r$) if $NON\_DEFAULT\_VALUE\_INCLUDED_r$ equals '1'; otherwise, $ACH\_TIME\_STAMP\_SHORT\_LENGTH_s$ shall be set to 10.

- Length of time stamp ($TIME\_STAMP\_LONG\_LENGTH_s$ = $TIME\_STAMP\_LONG\_LENGTH_r$) if $NON\_DEFAULT\_VALUE\_INCLUDED_r$ equals '1'; otherwise, $TIME\_STAMP\_LONG\_LENGTH_s$ shall be set to 52.

- Unit for time stamp length ($TIME\_STAMP\_UNIT_s$ = $TIME\_STAMP\_UNIT_r$) if $NON\_DEFAULT\_VALUE\_INCLUDED_r$ equals '1'; otherwise, $TIME\_STAMP\_UNIT_s$ shall be set to 6.

- For i=1 to the number of flows included in this message, store the following:

  - $BCMC\_FLOW\_LIST_s$[i].BCMC_FLOW_ID = ith occurrence of BCMC_FLOW_ID (BCMC flow identifier) . See section 2.6.13.11.

  - If $AUTH\_SIGNATURE\_REQUIRED_r$ equals '1', $BCMC\_FLOW\_LIST_s$[i].AUTH_SIGNATURE_REQ_IND = ith occurrence of $AUTH\_SIGNATURE\_REQ\_IND_r$(Authorization signature required indication).

  - $BCMC\_FLOW\_LIST_s$[i].BCMC_FLOW_ON_TRAFFIC_IDLE_IND = ith occurrence of $BCMC\_FLOW\_ON\_TRAFFIC\_IDLE\_IND_r$ (BCMC flow on traffic state or idle state supported identifier) if $BCMC\_FLOW\_ON\_TRAFFIC\_IDLE\_IND_r$ is included; otherwise, $BCMC\_FLOW\_LIST_s$[i].BCMC_FLOW_ON_TRAFFIC_IDLE_IND = '01'.

69. *Shared Channel Configuration Order:* The mobile station shall process this message as follows:

- If $ORDQ_r$ is set to '00000000', the mobile station shall perform the following:
  - The mobile station shall set $REV\_FCH\_ASSIGNED_s$ to '1'.
  - If CH_IND_s is equal to '11' , the mobile station shall begin transmitting on the Reverse Fundamental Channel.
  - If CH_IND_s is equal to '00' and $EXT\_CH\_IND_s$ is equal to '01111', '10001', '10011', or '10101', the mobile station shall begin transmitting on the Reverse Fundamental Channel and do the following:
    - If $EXT\_CH\_IND_s$ is equal to '01111', store $EXT\_CH\_IND_s$ = '00110'
    - If $EXT\_CH\_IND_s$ is equal to '10001', store $EXT\_CH\_IND_s$ = '10010'
    - If $EXT\_CH\_IND_s$ is equal to '10011', store $EXT\_CH\_IND_s$ = '01110'

+ If $EXT\_CH\_IND_S$ is equal to '10101', store $EXT\_CH\_IND_S$ = '10110'

- If $ORDQ_r$ is set to '00000001', the mobile station shall do the following:
  - The mobile station shall set $REV\_FCH\_ASSIGNED_S$ to '0'.
  - If CH_IND_S is equal to '11' , the mobile station shall stop transmitting on the Reverse Fundamental Channel.
  - If CH_IND_S is equal to '00' and $EXT\_CH\_IND_S$ is equal to '00110', '10010', '01110', or '10110', the mobile station shall stop transmitting on the Reverse Fundamental Channel and do the following:
    + If $EXT\_CH\_IND_S$ is equal to '00110', store $EXT\_CH\_IND_S$ = '01111'
    + If $EXT\_CH\_IND_S$ is equal to '10010', store $EXT\_CH\_IND_S$ = '10001'
    + If $EXT\_CH\_IND_S$ is equal to '01110', store $EXT\_CH\_IND_S$ = '10011'
    + If $EXT\_CH\_IND_S$ is equal to '10110', store $EXT\_CH\_IND_S$ = '10101'

70. *Service Status Order:* For each of the SERVICE_STATUS field included in this message, the mobile station shall indicate the status to corresponding service instance. For each of the SERVICE_STATUS field set to '001' (service request rejected), the mobile station shall perform the following:
    - The mobile station shall terminate the call control instance corresponding to the SR_ID associated with this SERVICE_STATUS field.
    - The mobile station shall send an indication to the affected service instance indicating that the call control instance has been terminated.
    - If a TAG is associated with the SR_ID corresponding to this SERVICE_STATUS field, the mobile station shall remove the TAG value from the TAG_OUTSTANDING_LIST and disable the corresponding enhanced origination timer

71. *Radio Configuration Parameters Message:* If any of the field of the message is set to an invalid value, then the mobile station shall send a *Mobile Station Reject Order* with the ORDQ field set to '00000100' (message field not in valid range). Otherwise, the mobile station shall perform the following:
    - If $FOR\_FCH\_ACK\_MASK\_RL\_BLANKING_r$ is included, the mobile station shall perform the following:
      - Set $FOR\_FCH\_ACK\_MASK\_RL\_BLANKING_S$ to $FOR\_FCH\_ACK\_MASK\_RL\_BLANKING_r$.
    - If $FOR\_FCH\_ACK\_MASK\_NO\_RL\_BLANKING_r$ is included, the mobile station shall perform the following:
      - Set $FOR\_FCH\_ACK\_MASK\_NO\_RL\_BLANKING_S$ to $FOR\_FCH\_ACK\_MASK\_NO\_RL\_BLANKING_r$.
    - If $REV\_FCH\_ACK\_MASK_r$ is included, the mobile station shall set $REV\_FCH\_ACK\_MASK_S$ to $REV\_FCH\_ACK\_MASK_r$.

- If $FOR\_SCH\_ACK\_MASK\_RL\_BLANKING_r$ is included, the mobile station shall perform the following:
  - Set $FOR\_SCH\_ACK\_MASK\_RL\_BLANKING_s$ to $FOR\_SCH\_ACK\_MASK\_RL\_BLANKING_r$.
- If $FOR\_SCH\_ACK\_MASK\_NO\_RL\_BLANKING_r$ is included, the mobile station shall perform the following:
  - Set $FOR\_SCH\_ACK\_MASK\_NO\_RL\_BLANKING_s$ to $FOR\_SCH\_ACK\_MASK\_NO\_RL\_BLANKING_r$.
- If $REV\_SCH\_ACK\_MASK_r$ is included, the mobile station shall set $REV\_SCH\_ACK\_MASK_s$ to $REV\_SCH\_ACK\_MASK_r$.
- If $FOR\_N2M\_IND_r$ is included, the mobile station shall set $FOR\_N2M\_IND_s$ to $FOR\_N2M\_IND_r$.
- If RPC_MODE_r is included, the mobile station shall set RPC_MODE_s to RPC_MODE_r.
- If $PWR\_CNTL\_STEP\_ZERO\_RATE_r$ is included, the mobile station shall set $PWR\_CNTL\_STEP\_ZERO\_RATE_s$ to $PWR\_CNTL\_STEP\_ZERO\_RATE_r$.
- If FOR_FCH_BLANKING_DUTYCYCLE is included, the mobile station shall set $FOR\_FCH\_BLANKING\_DUTYCYCLE_s$ to $FOR\_FCH\_BLANKING\_DUTYCYCLE_r$.
- If REV_FCH_BLANKING_DUTYCYCLE is included, the mobile station shall perform the following:
  - Set $REV\_FCH\_BLANKING\_DUTYCYCLE_s$ to $REV\_FCH\_BLANKING\_DUTYCYCLE_r$.
  - If the mobile station does not have R-SCH burst assigned with RC08, then set REV_FCH_BLANKING_DUTYCYCLE_IN_USE to $REV\_FCH\_BLANKING\_DUTYCYCLE_r$.
- If $REV\_ACKCH\_GAIN\_ADJ\_ACS1_r$ is included, the mobile station shall perform the following:
  - Set $REV\_ACKCH\_GAIN\_ADJ\_ACS1_s$ to $REV\_ACKCH\_GAIN\_ADJ\_ACS1_r$.
- If $REV\_ACKCH\_GAIN\_ADJ\_ACS2PLUS_r$ is included, the mobile station shall perform the following:
  - Set $REV\_ACKCH\_GAIN\_ADJ\_ACS2PLUS_s$ to $REV\_ACKCH\_GAIN\_ADJ\_ACS2PLUS_r$.
- If NUM_RC_PARAMS_RECORDS is set to non-zero value, the mobile station shall update $RC\_PARAMS\_RECORD_s[i]$ as follows:

- If entry for $PILOT\_PN_r$ exists then $RC\_PARAMS\_RECORD_s[i]$ is the existing entry, otherwise $RC\_PARAMS\_RECORD_s[i]$ is a new entry with REV_SCH_ACK_CH_WALSH[00], REV_SCH_ACK_BIT[00], REV_SCH_ACK_CH_WALSH[01], and REV_SCH_ACK_BIT[01] fields set to NULL.
- Set $RC\_PARAMS\_RECORD_s[i]$.PILOT_PN to $PILOT\_PN_r$.
- Set $RC\_PARAMS\_RECORD_s[i]$.QOF_SET_IN_USE to $QOF\_SET\_IN\_USE_r$.
- If REV_SCH0_ACK_CH_WALSH is included, the mobile station shall set $RC\_PARAMS\_RECORD_s[i]$.REV_SCH_ACK_CH_WALSH[00] to $REV\_SCH0\_ACK\_CH\_WALSH_r$.
- If REV_SCH0_ACK_BIT is included, the mobile station shall set $RC\_PARAMS\_RECORD_s[i]$.REV_SCH_ACK_BIT[00] to $REV\_SCH0\_ACK\_BIT_r$.
- If REV_SCH1_ACK_CH_WALSH is included, the mobile station shall set $RC\_PARAMS\_RECORD_s[i]$.REV_SCH_ACK_CH_WALSH[01] to $REV\_SCH1\_ACK\_CH\_WALSH_r$.
- If REV_SCH1_ACK_BIT is included, the mobile station shall set $RC\_PARAMS\_RECORD_s[i]$.REV_SCH_ACK_BIT[01] to $REV\_SCH1\_ACK\_BIT_r$.
- Set $RC\_PARAMS\_RECORD_s[i]$.FOR_FCH_CCSH_INTERLEAVER_TYPE to $FOR\_FCH\_CCSH\_INTERLEAVER\_TYPE_r$.

- If the mobile station receives a message that is not included in the above list, cannot be processed, or requires a capability which is not supported, the mobile station shall discard the message and send a *Mobile Station Reject Order* (ORDQ set to the applicable reason code as determined from Table 2.7.3-1) within T_{56m} seconds. If the mobile station receives a Call Control message (see 2.6.10) which is directed to a Call Control instance that does not exists, the mobile station shall send a *Mobile Station Reject Order* with ORDQ field set to '00010001' (no call control instance present with the specified identifier) to the base station within T_{56m} seconds.
- If the bits of $TMSI\_CODE_{s\text{-}p}$ are not all equal to '1', and if System Time (in 80 ms units) exceeds $TMSI\_EXP\_TIME_{s\text{-}p} \times 2^{12}$, the mobile station shall set all the bits of $TMSI\_CODE_{s\text{-}p}$ to '1' within T_{66m} seconds.
- If the full-TMSI timer expires or has expired, the mobile station shall set all the bits of $TMSI\_CODE_{s\text{-}p}$ to '1'. The mobile station shall update the registration variables as described in 2.6.5.5.2.5.
- If the Forward Packet Data Channel is assigned, whenever the mobile station transmitter is disabled, the MS shall set $FPDCH\_DTX\_INDICATOR_s$ to '1'.

- If the Forward Packet Data Channel is assigned, whenever the mobile station transmitter is enabled, the mobile station shall perform the following procedures:
  - The MS shall set $FPDCH\_DTX\_INDICATOR_S$ to '0'..
  - If the mobile station transmitter has been disabled for at least $TX\_DISABLED\_TIMER_S$, the mobile station shall send SIG-HandoffPDCH.Indication (handoff_type = ASSIGN) primitive to the MAC layer.

2.6.4.4 Release Substate

In this substate, the mobile station confirms the disconnect of all calls and physical channels.

Upon entering the *Release Substate*, the mobile station shall perform the following:

- The mobile station shall set the substate timer for T_{55m} seconds.
- If the mobile station enters the *Release Substate* with a power-down indication, the mobile station shall send a *Release Order* (ORDQ = '00000001'), and shall perform power-down registration procedures (see 2.6.5.5.4.4). The Layer 3 shall terminate all Call Control instances.
- If the mobile station enters the *Release Substate* with a mobile station release indication, the mobile station shall send a *Release Order* as follows:
  - If the mobile station supports operation in the reduced slot cycle mode following release from the traffic channel, the mobile station shall set ORDQ to '00000011', $RETURN\_CAUSE_S$ to '0000', and perform the following:
    - If $T\_SLOTTED_S$ is equal to 0, the mobile station shall perform the following:
      - Set the RSC_MODE_IND field as specified in 2.7.3.5. If RSC_MODE_IND is set to '1', then:
        - Set RSC_MODE_ENABLED to YES.
        - Set the RSC_END_TIME_UNIT and RSC_END_TIME_VALUE fields as specified in 2.7.3.5, and store the system time specified by these fields as RSC_END_TIME.
        - Set the RSCI field as specified in 2.7.3.5 and store it as $RSCI_S$; if $RSCI_S$ is equal to '0111', set $SLOTTED_S$ to NO.
        - Set $IGNORE\_QPCH_S$ to '1'.
    - Otherwise, the mobile station shall set the RSC_MODE_IND field to '0'.
  - Otherwise, the mobile station shall set ORDQ to '00000000', and set $RETURN\_CAUSE_S$ to '0000'.
- If the mobile station enters the *Release Substate* with a service inactive indication, the mobile station shall send a *Release Order* (ORDQ = '00000010'), and set $RETURN\_CAUSE_S$ to '0000'.

- If the mobile station enters the *Release Substate* with a base station release indication, the mobile station shall send a *Release Order* (ORDQ = '00000000'). The Layer 3 shall terminate all Call Control instances. The mobile station shall disable its transmitter, set $RETURN\_CAUSE_S$ to '0000', and shall perform the procedures as specified in 2.6.4.4.1.
- If the mobile station entered the *Release Substate* with a base station extended release indication, the mobile station shall perform the following:
  - The mobile station shall send an *Extended Release Response Message* to the base station as follows:
    - If the RSC_MODE_SUPPORTED field in the received *Extended Release Message* was set to '1' and the mobile station requests operation in the reduced slot cycle mode, the mobile station shall set the RSC_MODE_IND field to '1' and perform the following:
      - Set RSC_MODE_ENABLED to YES.
      - Set the RSC_END_TIME_UNIT and RSC_END_TIME_VALUE fields as specified in 2.7.2.3.2.25, and store the system time specified by these fields as RSC_END_TIME. The value of RSC_END_TIME shall be no later than the system time specified by $MAX\_RSC\_END\_TIME\_UNIT_r$ and $MAX\_RSC\_END\_TIME\_VALUE_r$ received in the *Extended Release Message*.
      - Set the RSCI field as specified in 2.7.2.3.2.25 and store it as $RSCI_S$; if $RSCI_S$ is equal to '0111', set $SLOTTED_S$ to NO.
      - Set $IGNORE\_QPCH_S$ to $IGNORE\_QPCH_r$ received in the *Extended Release Message*.
    - Otherwise, the mobile station shall set the RSC_MODE_IND field to '0'.
  - The Layer 3 shall terminate all Call Control instances.
  - The mobile station shall disable its transmitter, set $RETURN\_CAUSE_S$ to '0000', and shall perform the procedures as specified in 2.6.4.4.1.
- If the mobile station entered the *Release Substate* with a base station extended release with mini message indication, then the mobile station shall perform the following:
  - The mobile station shall send an *Extended Release Response Mini Message* to the base station.
  - The Layer 3 shall terminate all Call Control instances.
  - The mobile station shall disable its transmitter, set $RETURN\_CAUSE_S$ to '0000', and shall perform the procedures as specified in 2.6.4.4.1.

- If the mobile station enters the *Release Substate* with a redirection indication, the mobile station shall send a *Release Order* (ORDQ = '00000000') and shall enter the *System Determination Substate* of the *Mobile Station Initialization State* with a redirection indication (see 2.6.1.1). The Layer 3 shall terminate all Call Control instances.
- If the mobile station enters the *Release Substate* with an NDSS off indication, the mobile station shall send a *Release Order* (ORDQ = '00000000'), and shall enter the *System Determination Substate* of the *Mobile Station Initialization State* with an NDSS off indication (see 2.6.1.1). The Layer 3 shall terminate all Call Control instances.

While in the *Release Substate*, the mobile station shall perform the following:

- If the substate timer expires, the Layer 3 shall terminate all Call Control instances, and the mobile station shall disable its transmitter and shall enter the *System Determination Substate* of the *Mobile Station Initialization State* with a release indication (see 2.6.1.1).
- The mobile station shall perform Forward Traffic Channel supervision as specified in 2.6.4.1.8. If a loss of the Forward Traffic Channel is declared, the Layer 3 shall terminate all Call Control instances, and shall enter the *System Determination Substate* of the *Mobile Station Initialization State* with a release indication (see 2.6.1.1).
- The mobile station shall adjust its transmit power as specified in [2].
- The mobile station shall perform Forward Traffic Channel power control as specified in 2.6.4.1.1.
- The mobile station shall perform handoff processing as specified in 2.6.6.
- If the Fundamental Channel is present, the mobile station shall transmit null traffic, except when transmitting signaling traffic, on the Reverse Fundamental Channel.
- The mobile station shall process Forward Traffic Channel signaling traffic and shall discard other types of Forward Traffic Channel traffic.
- The mobile station shall perform registration timer maintenance as specified in 2.6.5.5.4.2.
- If Layer 3 receives a L2-Condition.Notification primitive from Layer 2 indicating an acknowledgment failure, the Layer 3 shall terminate all Call Control instances, and the mobile station shall disable its transmitter and enter the *System Determination Substate* of the *Mobile Station Initialization State* with a release indication (see 2.6.1.1).
- If the Layer 3 receives an "enter traffic channel substate indication" from a Call Control instance, the Layer 3 shall enter the *Traffic Channel substate*.

- If Layer 3 receives a 'message rejected indication' from a Call Control instance, mobile station shall send a *Mobile Station Reject Order* (ORDQ set to the applicable reason code as determined from Table 2.7.3-1) within T_{56m} seconds as follows:
  - If $P\_REV\_IN\_USE_s$ is equal to or greater than seven, the mobile station shall include the CON_REF_INCL field with this message and shall perform the following: if the corresponding Call Control instance is identified by NULL, the mobile station shall either set the CON_REF_INCL field of the message to '0' or set the CON_REF_INCL field to '1' and set the CON_REF field to the connection reference of the service option connection corresponding to this Call Control instance; otherwise, the mobile station shall set the CON_REF_INCL field of the message to '1' and the CON_REF field of the message to the connection reference of the service option connection corresponding to this Call Control instance.

- If the mobile station receives a message which is included in the following list, and if every message field value is within its permissible range, the mobile station shall process the message as described below and in accordance with the message's action time (see 2.6.4.1.5):
  1. *Alert With Information Message:* If $P\_REV\_IN\_USE_s$ is less than seven, the Layer 3 shall deliver this message to the Call Control instance; otherwise, the Layer 3 shall deliver this message to the Call Control instance identified by NULL.
  2. *Authentication Request Message:* The mobile station shall process the message and shall respond as specified in 2.3.12.5.2.
  3. *Candidate Frequency Search Control Message:* The mobile station shall process the message as specified in 2.6.6.2.5.1.
  4. *Candidate Frequency Search Request Message:* The mobile station shall process the message as specified in 2.6.6.2.5.1.
  5. *Data Burst Message*
  6. *Extended Alert With Information Message:* The mobile station shall perform the following: If $CON\_REF\_INCL_r$ equals '0', the Layer 3 shall deliver this message to the Call Control instance identified by NULL; otherwise, the Layer 3 shall deliver this message to the Call Control instance identified by CON_REF_r.
  7. *Extended Handoff Direction Message:* The mobile station shall process the message as specified in 2.6.6.2.5.1.
  8. *Extended Neighbor List Update Message:* The mobile station shall process the message as specified in 2.6.6.2.5.1.
  9. *Extended Supplemental Channel Assignment Message:* The mobile station shall process the message as specified in 2.6.6.2.5.1.
  10. *General Handoff Direction Message:* The mobile station shall process the message as specified in 2.6.6.2.5.1.
  11. *In-Traffic System Parameters Message:* The mobile station shall process the

message as specified in 2.6.4.1.4.

12. *Local Control Order*

13. *Mobile Assisted Burst Operation Parameters Message:* The mobile station shall process the message as specified in 2.6.6.2.5.1.

14. *Lock Until Power-Cycled Order:* The mobile station shall disable its transmitter and record the reason for the *Lock Until Power-Cycled Order* in the mobile station's semi-permanent memory (LCKRSN_P_{s-p} equals the least-significant four bits of $ORDQ_r$). The mobile station should notify the user of the locked condition. The Layer 3 shall terminate all Call Control instances. The Layer 3 shall enter the *System Determination Substate* of the *Mobile Station Initialization State* with a lock indication (see 2.6.1.1), and shall not enter the *System Access State* again until after the next mobile station power-up or until it has received an *Unlock Order*. This requirement shall take precedence over any other mobile station requirement specifying entry to the *System Access State*.

15. *Maintenance Required Order:* The mobile station shall record the reason for the *Maintenance Required Order* in the mobile station's semi-permanent memory ($MAINTRSN_{s-p}$ equals the least-significant four bits of $ORDQ_r$). The mobile station shall remain in the unlocked condition. The mobile station should notify the user of the maintenance required condition.

16. *Mobile Station Registered Message:* The mobile station shall process the message as specified in 2.6.5.5.4.3.

17. *Neighbor List Update Message:* The mobile station shall process the message as specified in 2.6.6.2.5.1.

18. *Outer Loop Report Request Order*: The mobile station shall send the *Outer Loop Report Message* in assured mode to the base station.

19. *Power Control Message:* The mobile station shall process the message as specified in 2.6.4.1.1.3.

20. *Power Control Parameters Message:* The mobile station shall process the message as specified in 2.6.4.1.1.2.

21. *Power Up Function Message:* The mobile station shall process the message as specified in 2.6.4.1.7.1.

22. *Power Up Function Completion Message*: The mobile station shall process the message as specified in 2.6.4.1.7.3.

23. *Rate Change Message:* The mobile station shall process the message as specified in 2.6.4.1.1.4.

24. *Release Order:* The mobile station shall disable its transmitter. The Layer 3 shall terminate all Call Control instances. The mobile station shall set RSC_MODE_ENABLED to NO. If the mobile station enters the *Release Substate* with a power-down indication, the mobile station may power down;

otherwise, the mobile station shall perform the procedures as specified in 2.6.4.4.1.

25. *Retrieve Parameters Message:* The mobile station shall send, within T_{56m} seconds, a *Parameters Response Message*.

26. *Retry Order:* The mobile station shall process the order as follows:

- If $RETRY\_TYPE_r$ is equal to '000', the mobile station shall set $RETRY\_DELAY_s$[RETRY_TYPE] to 0, where RETRY_TYPE is equal to '001', '010', '011', '100', or '101'.
- If $RETRY\_TYPE_r$ is equal to '001', '100', or '101', then the mobile station shall perform the following:
  - If $RETRY\_DELAY_r$ is equal to '00000000', then the mobile station shall set $RETRY\_DELAY_s$ [$RETRY\_TYPE_r$] to 0.
  - If $RETRY\_DELAY_r$ is not equal to '00000000', the mobile station shall set $RETRY\_DELAY_s$[$RETRY\_TYPE_r$] as follows:
    - If the most significant bit of the $RETRY\_DELAY_r$ is 0, set $RETRY\_DELAY\_UNIT_s$ to 1000ms. If the most significant bit of the $RETRY\_DELAY_r$ is '1', set $RETRY\_DELAY\_UNIT_s$ to 60000ms.
    - The mobile station shall set $RETRY\_DELAY\_VALUE_s$ to the seven least significant bits of $RETRY\_DELAY_r$.
    - The mobile station shall store the next system time 80 ms boundary + $RETRY\_DELAY\_VALUE_s \times RETRY\_DELAY\_UNIT_s$ ms as $RETRY\_DELAY_s$[$RETRY\_TYPE_r$].

27. *Service Option Control Message:* The mobile station shall process the message in accordance with the requirements for the active service subfunction (see 2.6.4.1.2.2).

28. *Service Option Control Order:* The mobile station shall process the message in accordance with the requirements for the active service subfunction (see 2.6.4.1.2.2).

29. *Service Redirection Message:* The mobile station shall disable its transmitter. If the mobile station enters the *Release Substate* with a power-down indication, the mobile station may power down (if powering down, the Layer 3 shall terminate all Call Control instances); otherwise, the mobile station shall process the message as follows:

- If $RECORD\_TYPE_r$ is '00000000', the mobile station shall perform the following:
  - The mobile station shall set $RETURN\_IF\_FAIL_s$ = $RETURN\_IF\_FAIL_r$.
  - If $DELETE\_TMSI_r$ is equal to '1', the mobile station shall set all the bits of $TMSI\_CODE_{s\text{-}p}$ to '1'.
  - The mobile station shall disable the full-TMSI timer.

- The Layer 3 shall terminate all Call Control instances, and shall enter the *System Determination Substate of the Mobile Station Initialization State* with an NDSS off indication (see 2.6.1.1).

- If RECORD_TYPE is not equal to '00000000', $REDIRECT\_TYPE_r$ is '1', and the mobile station supports the band class and operating mode specified in the message, the mobile station shall perform the following:
  - The mobile station shall store the redirection record received in the message as $REDIRECT\_REC_s$.
  - The mobile station shall set $RETURN\_IF\_FAIL_s = RETURN\_IF\_FAIL_r$.
  - If $DELETE\_TMSI_r$ is equal to '1', the mobile station shall set all the bits of $TMSI\_CODE_{s\text{-}p}$ to '1'.
  - The mobile station shall disable the full-TMSI timer.
  - The Layer 3 shall terminate all Call Control instances, and shall enter the *System Determination Substate of the Mobile Station Initialization State* with a redirection indication (see 2.6.1.1).

- Otherwise, the mobile station shall discard the message and send *a Mobile Station Reject Order* (ORDQ set to the applicable reason code as determined from Table 2.7.3-1) within T_{56m} seconds.

30. *Status Request Message:* The mobile station shall send, within T_{56m} seconds, a Status Response Message. If the message does not specify any qualification information ($QUAL\_INFO\_TYPE_r$ is equal to '00000000'), the mobile station shall include the requested information records in the *Status Response Message*. If the message specifies a band class ($QUAL\_INFO\_TYPE_r$ is equal to '00000001'), the mobile station shall only include the requested information records for the specified band class ($BAND\_CLASS_r$) in the *Status Response Message*. If the message specifies a band class and an operating mode ($QUAL\_INFO\_TYPE_r$ is equal to '00000010'), the mobile station shall only include the requested information records for the specified band class ($BAND\_CLASS_r$) and operating mode (OP_MODE_r) in the *Status Response Message*. If the message specifies a band class or a band class and an operating mode which are not supported by the mobile station, the mobile station shall send a *Mobile Station Reject Order* with ORDQ set to '00000110' (message requires a capability that is not supported by the mobile station). If the response to this message exceeds the allowable length, the mobile station shall send a *Mobile Station Reject Order* with ORDQ set to '00001000' (response message would exceed the allowable length). If the message specifies an information record which is not supported by the mobile station for the specified band class and operating mode, the mobile station shall send a *Mobile Station Reject Order* with ORDQ set to '00001001' (information record is not supported for the specified band class and operating mode).

31. *Status Request Order:* If $CDMABAND_s$ is equal to '00000', the mobile station shall send, a *Status Message* within T_{56m} seconds. The mobile station shall

respond with information corresponding to the current band class and operating mode.

32. *Supplemental Channel Assignment Message:* The mobile station shall process the message as specified in 2.6.6.2.5.1.

33. *TMSI Assignment Message:* The mobile station shall store the TMSI zone and code as follows:

    - The mobile station shall store the length of the TMSI zone field by setting $ASSIGNING\_TMSI\_ZONE\_LEN_{s\text{-}p}$ to $TMSI\_ZONE\_LEN_r$;
    - The mobile station shall store the assigning TMSI zone number by setting the $ASSIGNING\_TMSI\_ZONE\_LEN_{s\text{-}p}$ least significant octets of $ASSIGNING\_TMSI\_ZONE_{s\text{-}p}$ to $TMSI\_ZONE_r$, and
    - The mobile station shall store the TMSI code by setting $TMSI\_CODE_{s\text{-}p}$ to $TMSI\_CODE_r$.

    The mobile station shall set the TMSI expiration time by setting $TMSI\_EXP\_TIME_{s\text{-}p}$ to $TMSI\_EXP\_TIME_r$. The mobile station shall disable the full-TMSI timer. The mobile station shall then respond with a *TMSI Assignment Completion Message* within T_{56m} seconds.

34. *Universal Handoff Direction Message:* The mobile station shall process the message as specified in 2.6.6.2.5.1.

35. *User Zone Reject Message*: The mobile station shall process this message as specified in 2.6.9.2.2.

36. *User Zone Update Message*: The mobile station shall process this message as specified in 2.6.9.2.2.

37. *Extended Release Message*:

    - If USE_EXT_CH_IND is equal to ‘0’ and CH_IND is equal to ‘111’ or the physical channels indicated by the two least significant bits of CH_IND includes all the physical channels (FCH, DCCH, or both) currently being processed by the mobile station, then the mobile station shall perform the following:

        – If the mobile station supports operation in the reduced slot cycle mode following release of the traffic channel, the mobile station shall perform the following:

            + If RSC_MODE_ENABLED is equal to YES, the mobile station shall perform the following:

                o If $RSC\_MODE\_SUPPORTED_r$ is equal to ‘1’, the mobile station shall perform the following:

                ◊ Set RSC_END_TIME to the earlier of the current value of

RSC_END_TIME, and the system time specified by MAX_RSC_END_TIME_UNIT$_r$ and MAX_RSC_END_TIME_VALUE$_r$.

◊ Set IGNORE_QPCH$_s$ to IGNORE_QPCH$_r$.

o If RSC_MODE_SUPPORTED$_r$ is equal to '0', the mobile station shall set RSC_MODE_ENABLED to NO.

+ If RSC_MODE_ENABLED is equal to NO, the mobile station shall perform the following:

o If REQ_RSCI_INCL$_r$ is included and set to '1', and the mobile station sent a *Release Order* with ORDQ equal to '00000011', the mobile station shall send an *Extended Release Response Message* with the RSC_MODE_IND field set to '1', and perform the following:

◊ Set RSC_MODE_ENABLED to YES.

◊ Set the RSC_END_TIME_UNIT and RSC_END_TIME_VALUE fields as specified in 2.7.2.3.2.25, and store the system time specified by these fields as RSC_END_TIME. The value of RSC_END_TIME shall be no later than the system time specified by MAX_RSC_END_TIME_UNIT$_r$ and MAX_RSC_END_TIME_VALUE$_r$ received in the *Extended Release Message*.

◊ Set the RSCI field as specified in 2.7.2.3.2.25 and store it as RSCI$_s$; if RSCI$_s$ is equal to '0111', set SLOTTED$_s$ to NO.

◊ Set IGNORE_QPCH$_s$ to IGNORE_QPCH$_r$.

– The mobile station shall disable its transmitter.

– The Layer 3 shall terminate all Call Control instances.

– If the mobile station enters the *Release Substate* with a power-down indication, the mobile station may power down; otherwise, the mobile station shall perform the procedures as specified in 2.6.4.4.1.

• Otherwise, the mobile station shall discard the *Extended Release Message* and send a *Mobile Station Reject Order* with ORDQ field set to '00000010' (message not accepted in this state) within T_{56m} seconds.

- If the mobile station receives a message that is not included in the above list or cannot be processed, the mobile station shall discard the message and send a *Mobile Station Reject Order* (ORDQ set to the applicable reason code as determined from Table 2.7.3-1) within T_{56m} seconds. If the mobile station receives a Call Control message (see 2.6.10) which is directed to a Call Control instance that does not exists, the mobile station shall send a *Mobile Station Reject Order* with ORDQ field set to '00010001' (no call control instance present with the specified identifier) to the base station within T_{56m} seconds.
- If the bits of $TMSI\_CODE_{s\text{-}p}$ are not all equal to '1', and if System Time (in 80 ms units) exceeds $TMSI\_EXP\_TIME_{s\text{-}p} \times 2^{12}$, the mobile station shall set all the bits of $TMSI\_CODE_{s\text{-}p}$ to '1' within T_{66m} seconds.
- If the full-TMSI timer expires or has expired, the mobile station shall set all the bits of $TMSI\_CODE_{s\text{-}p}$ to '1'. The mobile station shall update the registration variables as described in 2.6.5.5.2.5.

2.6.4.4.1 Procedures for Exiting the Release Substate

The mobile station shall perform the following procedures in the order listed below.

If the mobile station received an *Extended Release Message* with the RER_MODE_ENABLED field set to '1', then the mobile station shall set RER_MODE_ENABLED to YES, RER_COUNT to 0, and shall perform the following:

- The mobile station shall store the following:
  - Maximum number of *Radio Environment Messages* that the mobile station is permitted to transmit while in radio environment reporting mode ($RER\_MAX\_NUM\_MSG_s$ = *infinity*, if $RER\_MAX\_NUM\_MSG\_IDX_r$ is equal to '111'; otherwise, $RER\_MAX\_NUM\_MSG_s = 2^{RER\_MAX\_NUM\_MSG\_IDX_r}$).
  - Maximum number of pilots to maintain in RER_PILOT_LIST ($MAX\_RER\_PILOT\_LIST\_SIZE_s = MAX\_RER\_PILOT\_LIST\_SIZE_r$).
  - System identification for radio environment reporting mode ($RER\_SID_s = SID_s$).
  - Network identification for radio environment reporting mode ($RER\_NID_s = NID_s$).
- The mobile station shall initialize the radio environment report pilot list (RER_PILOT_LIST) to contain the set of pilots that made up the Active Set on the Traffic Channel.
- The mobile station shall enable the radio environment report timer with an initial value of *infinity* if RER_TIME_r is equal to '111'; otherwise, the mobile station shall enable the radio environment report timer with an initial value of $2^{RER\_TIME_r}$ seconds if $RER\_TIME\_UNIT_r$ is equal to '00', or $2^{RER\_TIME_r}$ minutes if $RER\_TIME\_UNIT_r$ is equal to '01', or $2^{RER\_TIME_r}$ hours if $RER\_TIME\_UNIT_r$ is equal to '10'.

If the mobile station received an *Extended Release Message* with the TKZ_MODE_ENABLED field set to '1', then the mobile station shall set TKZ_COUNT to 0, and shall perform the following:

- The mobile station shall store the following:
  - Tracking zone identifier ($TKZ\_ID_s = TKZ\_ID_r$).
  - Tracking zone list length ($TKZ\_LIST\_LEN_s = TKZ\_LIST\_LEN_r$).
  - TKZ timer ($TKZ\_TIMER_s = TKZ\_TIMER_r$).
  - Maximum number of *Radio Environment Messages* that the mobile station is permitted to transmit while in tracking zone mode ($TKZ\_MAX\_NUM\_MSG_s$ = *infinity*, if $TKZ\_MAX\_NUM\_MSG\_IDX_r$ is equal to '111'; otherwise, $TKZ\_MAX\_NUM\_MSG_s = 2^{TKZ\_MAX\_NUM\_MSG\_IDX_r}$).
  - System identification for tracking zone mode ($TKZ\_SID_s = SID_s$).
  - Network identification for tracking zone mode ($TKZ\_NID_s = NID_s$).
  - Tracking zone update period ($TKZ\_UPDATE\_PRD_s = TKZ\_UPDATE\_PRD_r$).
- If RER_MODE_ENABLED is equal to NO, the mobile station shall set TKZ_MODE_ENABLED to YES; otherwise, the mobile station shall set TKZ_MODE_PENDING to YES.
- If TKZ_MODE_ENABLED is equal to YES, the mobile station shall perform the following:
  - Initialize the tracking zone list (TKZ_LIST) to contain TKZ_ID_s.
  - Enable the tracking zone update timer with an initial value of infinity if $TKZ\_UPDATE\_PRD_s$ is equal to '1111'; otherwise, the mobile station shall enable the tracking zone update timer with an initial value of $2^{TKZ\_UPDATE\_PRD_s + 6}$ seconds.

The mobile station shall perform the following procedures to determine whether to enter the *Mobile Station Idle State* or *System Determination Substate* of the *Mobile Station Initialization State*.

If the mobile station received an *Extended Release Message* with DIRECT_TO_IDLE_INFO_INCL field equal to '1' and $RELEASE\_TYPE_r$ equal to '011', the mobile station shall enter the *System Determination Substate* of the *Mobile Station Initialization Substate* with a release indication (see 2.6.1.1).

If the mobile station received an *Extended Release Message* with DIRECT_TO_IDLE_INFO_INCL field equal to '1', $RELEASE\_TYPE_r$ equal to a value other than '011', and all the following conditions are met:

- The system indicated by this message is a preferred system according to system selection process of the mobile station, and
- If the BAND_CLASS field is included in this message, the mobile station supports the band class capability specified by this field, and
- If the SR1_TD_MODE field is included in this message, the mobile station supports the transmit diversity capability specified by this field, and

- The mobile station is able to select one of the pilots in the DIRECT TO IDLE record of the *Extended Release Message* with sufficient signal strength to enter *Mobile Station Idle State*.

then, the mobile station shall perform the following:

- If $RELEASE\_TYPE_r$ equals '000', the mobile station shall perform the following:
  - If $FREQ\_INCL_r$ equals '1', the mobile station shall set $CDMABAND_s$ to $BAND\_CLASS_r$ and $CDMACH_s$ to $CDMA\_FREQ_r$.
  - The mobile station shall store the following:
    + $PAGECH_s = PAGE\_CH_r$
    + $PRAT_s = PRAT_r$
  - The mobile station shall then perform the following:
    + Set its code channel to PAGECHs,
    + Set the Paging Channel data rate as determined by PRATs,
    + The mobile station shall enter the *Mobile Station Idle State* on the CDMA Channel specified by CDMABANDs and CDMACHs and acquire the specified Paging Channel. If $BCMC\_INFO\_INCL_r$ is included and is equal to '1', the mobile station may start monitoring the BCMC flows corresponding to the BCMC_FLOW_IDs (See section 2.6.13.11) included in this message after entering the *Mobile Station Idle State* as specified in section 2.6.13, using the BCMC flow information included in this message.
- If $RELEASE\_TYPE_r$ equals '001', the mobile station shall perform the following:
  - If $FREQ\_INCL_r$ equals '1', the mobile station shall set $CDMABAND_s$ to $BAND\_CLASS_r$ and $CDMACH_s$ to $CDMA\_FREQ_r$.
  - The mobile station shall store the following:
    + $BCCH_s = SR1\_BCCH\_CODE\_CHAN\_NON\_TD_r$
    + $BCCH\_CODE\_RATE_s = SR1\_CRAT\_NON\_TD_r$
    + $BRAT_s = SR1\_BRAT\_NON\_TD_r$
  - The mobile station shall then perform the following:
    + Set its Primary Broadcast Control Channel code channel to $BCCH_s$,
    + Set the Primary Broadcast Control Channel data rate as determined by $BRAT_s$,
    + Set the Primary Broadcast Control Channel code rate as determined by $BCCH\_CODE\_RATE_s$,
    + The mobile station shall enter the *Mobile Station Idle State* on the CDMA Channel specified by $CDMABAND_s$ and $CDMACH_s$ and acquire the specified Primary Broadcast Control Channel. If $BCMC\_INFO\_INCL_r$ is included and is equal to '1', the mobile station may start monitoring the BCMC flows

corresponding to the BCMC_FLOW_IDs (See section 2.6.13.11) included in this message after entering the *Mobile Station Idle State* as specified in section 2.6.13, using the BCMC flow information included in this message.

- If $RELEASE\_TYPE_r$ equals '010', the mobile station shall perform the following:
  - If $FREQ\_INCL_r$ equals '1', the mobile station shall set $CDMABAND_s$ to $BAND\_CLASS_r$ and $CDMACH_s$ to $CDMA\_FREQ_r$.
  - The mobile station shall store the following:
    - + $BCCH_s = SR1\_BCCH\_CODE\_CHAN\_TD_r$
    - + $BCCH\_CODE\_RATE_s = SR1\_CRAT\_TD_r$
    - + $BRAT_s = SR1\_BRAT\_TD_r$
  - The mobile station shall then perform the following:
    - + Set its Primary Broadcast Control Channel code channel to $BCCH_s$,
    - + Set the Primary Broadcast Control Channel data rate as determined by $BRAT_s$,
    - + Set the Primary Broadcast Control Channel code rate as determined by $BCCH\_CODE\_RATE_s$,
    - + The mobile station shall enter the *Mobile Station Idle State* on the CDMA Channel specified by $CDMABAND_s$ and $CDMACH_s$ and acquire the specified Primary Broadcast Control Channel that supports Transmit Diversity. If $BCMC\_INFO\_INCL_r$ is included and is equal to '1', the mobile station may start monitoring the BCMC flows corresponding to the BCMC_FLOW_IDs (See section 2.6.13.11) included in this message after entering the *Mobile Station Idle State* as specified in section 2.6.13, using the BCMC flow information included in this message.

Otherwise, the mobile station shall perform the following:

- If RELEASE_TO_IDLE_INDs is equal to '0', the mobile station shall enter the System Determination Substate of the Mobile Station Initialization State with a release indication (see 2.6.1.1).
- If $RELEASE\_TO\_IDLE\_IND_s$ is equal to '1', the mobile station shall perform the following:
  - If the mobile station has stored BCCH information (BCCH Walsh Code, BCCH data rate, and BCCH code rate) for a base station which has sufficient pilot strength, the mobile station shall restore the BCCH information to $BCCH_s$, $BRAT_s$ and $BCCH\_CODE\_RATE_s$, and then perform the following:
    - + Set its Primary Broadcast Control Channel code channel to $BCCH_s$,
    - + Set the Primary Broadcast Control Channel data rate as determined by $BRAT_s$,
    - + Set the Primary Broadcast Control Channel code rate as determined by

BCCH_CODE_RATE$_S$,

+ The mobile station shall enter the *Mobile Station Idle State*.

– Otherwise, the mobile station shall perform the following:

+ If the mobile station has stored PCH information (PCH number and PCH data rate) for a base station which has sufficient pilot strength, the mobile station shall restore the PCH information to PAGECH$_S$ and PRAT$_S$, and then perform the following:

o Set its code channel to PAGECH$_S$,

o Set the Paging Channel data rate as determined by PRAT$_S$,

o The mobile station shall enter the *Mobile Station Idle State*,

+ Otherwise, the mobile station shall perform the following:

o If IDLE_SID is equal to SID$_S$, IDLE_CDMABAND is equal to CDMABAND$_S$, IDLE_NID is equal to NID$_S$, and IDLE_P_REV is equal to P_REV$_S$, and the mobile station decides to enter the *Mobile Station Idle State*, the mobile station shall perform the following:

◊ The mobile station shall set CDMACH$_S$ to IDLE_CDMA_CHAN.

◊ If IDLE_BCCH_CHAN is equal to ‘1’, the mobile station shall perform the following:

– Set its Primary Broadcast Control Channel code channel to BCCH$_S$,

– Set the Primary Broadcast Control Channel data rate as determined by BRAT$_S$,

– Set the Primary Broadcast Control Channel code rate as determined by BCCH_CODE_RATE$_S$,

– The mobile station shall enter the *Mobile Station Idle State*.

◊ If IDLE_BCCH_CHAN is equal to ‘0’, the mobile station shall perform the following:

– Set its code channel to PAGECH$_S$,

– Set the Paging Channel data rate as determined by PRAT$_S$,

– The mobile station shall enter the *Mobile Station Idle State*.

o Otherwise, the mobile station shall enter the *System Determination Substate* of the *Mobile Station Initialization State* with a release indication (see 2.6.1.1).

2.6.5 Registration

2.6.5.1 Forms of Registration

Registration is the process by which the mobile station notifies the base station of its location, status, identification, slot cycle, and other characteristics. The mobile station informs the base station of its location and status so that the base station can efficiently page the mobile station when establishing a mobile station terminated call. For operation in the slotted mode, the mobile station supplies the SLOT_CYCLE_INDEX parameter so that the base station can determine which slots the mobile station is monitoring. The mobile station supplies the station class mark and the protocol revision number so that the base station knows the capabilities of the mobile station.

The CDMA system supports 12 different forms of registration:

1. Power-up registration. The mobile station registers when it powers on, switches from using a different frequency block designator, switches from using a different band class, switches from using an alternative operating mode, or upon the insertion of an R-UIM into a powered-on ME.
2. Power-down registration. The mobile station registers when it powers off if previously registered in the current serving system.
3. Timer-based registration. The mobile station registers when a timer expires.
4. Distance-based registration. The mobile station registers when the distance between the current base station and the base station in which it last registered exceeds a threshold.
5. Zone-based registration. The mobile station registers when it enters a new zone.
6. Parameter-change registration. The mobile station registers when certain of its stored parameters change or when it enters a new system.
7. Ordered registration. The mobile station registers when the base station requests it.
8. Implicit registration. When a mobile station successfully sends an *Origination Message*, *Reconnect Message*, *Call Recovery Request Message*, or *Page Response Message*, the base station can infer the mobile station's location. This is considered an implicit registration.
9. Traffic Channel registration. Whenever the base station has registration information for a mobile station that has been assigned to a Traffic Channel, the base station can notify the mobile station that it is registered.
10. User Zone Registration. The mobile station registers when it selects an active User Zone (see 2.6.9.1.2).
11. Encryption/Message Integrity re-sync required registration. The mobile station registers when extended encryption is turned on and the mobile station determines that it can not decrypt any messages from the base station (see 2.3.12.4.1.3) or the mobile station registers when message integrity is supported and the mobile station determines that it can not validate the MACI of any messages from the base station.

12. BCMC registration. BCMC registration is performed by a mobile station currently monitoring or desiring to monitor a BCMC flow.

The first five forms of registration, User Zone Registration, and Encryption/Message Integrity re-sync required registration, as a group, are called autonomous registration and are enabled by roaming status (see 2.6.5.3). Parameter-change registration is independent of roaming status. Ordered registration is initiated by the base station through an *Order Message*. Implicit registration does not involve the exchange of any registration messages between the base station and the mobile station. The base station can obtain registration information by sending the *Status Request Message* to the mobile station on either the f-csch or the f-dsch. The base station can obtain limited registration information by sending the *Status Request Order* to the mobile station on the f-dsch. The mobile station can be notified that it is registered through the *Mobile Station Registered Message*.

Any of the various forms of autonomous registration and parameter-change registration can be enabled or disabled. The forms of registration that are enabled and the corresponding registration parameters are communicated in the *System Parameters Message* on the Paging Channel, or the *ANSI-41 System Parameters Message* on the Primary Broadcast Control Channel.

In addition, the mobile station may enable or disable autonomous registration for each type of roaming described in 2.6.5.3.

2.6.5.1.1 Power-Up Registration

Power-up registration is performed when the mobile station is turned on. To prevent multiple registrations when power is quickly turned on and off, or when the R-UIM is quickly inserted and removed, the mobile station delays T_{57m} seconds before registering, after entering the *Mobile Station Idle State*.

The mobile station shall maintain a power-up/initialization timer. While the power-up/initialization timer is active, the mobile station shall not make registration access attempts.

Power-up registration is performed when the mobile station changes to a different operating mode (see 2.6.5.5.1.1), or as indicated by [40]. A power-up registration is also performed when the mobile station changes band classes, serving system, or frequency block designator if the conditions stated in 2.6.5.5.1.1 are met.

2.6.5.1.2 Power-Down Registration

Power-down registration is performed when the user directs the mobile station to power off. If power-down registration is performed, the mobile station does not power off until after completing the registration attempt.

The mobile station does not perform power-down registration if it has not previously registered in the system that corresponds to the current SID_s and NID_s (see 2.6.5.5.2.4).

2.6.5.1.3 Timer-Based Registration

Timer-based registration causes the mobile station to register at regular intervals. Its use also allows the system to automatically deregister mobile stations that did not perform a

successful power-down registration. Timer-based registration uses a Paging Channel or a Forward Common Control Channel slot counter (equivalent to a timer with time increments of 80 ms). Timer-based registration is performed when the counter reaches a maximum value ($REG\_COUNT\_MAX_S$) that is controlled by the base station via the REG_PRD field of the *System Parameters Message* or *ANSI-41 System Parameters Message*. The base station disables timer-based registration by setting REG_PRD to zero.

The mobile station shall maintain a timer-based registration counter (REG_COUNT_S). The mobile station shall compute and store the timer expiration count ($REG\_COUNT\_MAX_S$) as

$$REG\_COUNT\_MAX_S = \lfloor 2^{REG\_PRD/4} \rfloor.$$

The mobile station shall maintain an indicator of timer-based registration timer enable status ($COUNTER\_ENABLED_S$).

The counter is reset after each successful registration.

Whenever the mobile station changes $COUNTER\_ENABLED_S$ from NO to YES, it shall set REG_COUNT_S as follows:

If the mobile station supports the procedure described in section 2.6.5.1.3.1 and the conditions for suppression of randomization of timer-based registration are met, the mobile station shall set REG_COUNT_S to 0; otherwise, the mobile station shall set REG_COUNT_S based upon the value of $TBR\_RAND\_WINDOW_S$ as shown in Table 2.6.5.1.3-1. When setting REG_COUNT_S to a pseudorandom value, the mobile station shall use the pseudorandom number generator specified in 2.6.7.2.

Table 2.6.5.1.3-1. Percentage of Randomization for Timer-based registration

Value of TBR_RAND_WINDOW (binary)	**Meaning**	**REG_COUNT_S**
00	0% randomization	0
01	25% randomization	Pseudorandom value between 0 and ($\lfloor REG\_COUNT\_MAX_S/4 \rfloor$ - 1)
10	50% randomization	Pseudorandom value between 0 and ($\lfloor REG\_COUNT\_MAX_S/2 \rfloor$ - 1)
11	100% randomization	Pseudorandom value between 0 and ($REG\_COUNT\_MAX_S$ – 1)

If the mobile station is operating in the non-slotted mode, it shall increment the timer-based registration counter once per 80 ms whenever $COUNTER\_ENABLED_S$ equals YES. If the mobile station is operating in slotted mode, it may increment the timer-based registration counter when it begins to monitor the Paging Channel (see 2.6.2.1.1.3) or the Forward Common Control Channel. A mobile station operating in the slotted mode shall

increment the counter by the same amount that the counter would have been incremented if the mobile station had been operating in the non-slotted mode.[32]

2.6.5.1.3.1 Timer-Based Registration based on Frequency of Implicit Registrations

A mobile station may support a procedure to prevent unnecessary timer-based registrations when implicit registrations are sent frequently.

If the mobile station supports this procedure, the mobile station shall set REG_COUNT_S to 0 when it changes $COUNTER\_ENABLED_S$ from NO to YES if all of the following conditions for suppression of randomization of timer-based registrations are met:

- the mobile station has been powered on for the past $\lfloor 2^{REG\_PRD/4} \rfloor \times 0.32$ seconds,
- in every period of $\lfloor 2^{REG\_PRD/4} \rfloor \times 0.08$ consecutive seconds in the past $\lfloor 2^{REG\_PRD/4} \rfloor \times 0.32$ seconds the mobile station sent at least one *Origination Message*, *Page Response Message*, or *Reconnect Message*, or the mobile station was in the *Mobile Station Control on the Traffic Channel State* for at least part of the period,
- $TBR\_RAND\_SUPPR\_ENABLE_S$ is equal to '1'.
- If either of the following two conditions are true:
  - the mobile station was not in the *Mobile Station Control on the Traffic Channel State* at any time during the past $\lfloor 2^{REG\_PRD/4} \rfloor \times 0.32$ seconds, or
  - the mobile station was in the *Mobile Station Control on the Traffic Channel State* during the past $\lfloor 2^{REG\_PRD/4} \rfloor \times 0.32$ seconds, but it was not continuously in the *Mobile Station Control on the Traffic Channel State* for the entire duration of the past $\lfloor 2^{REG\_PRD/4} \rfloor \times 0.32$ seconds.

2.6.5.1.4 Distance-Based Registration

Distance-based registration causes a mobile station to register when the distance between the current base station and the base station in which it last registered exceeds a threshold. The mobile station determines that it has moved a certain distance by computing a distance measure based on the difference in latitude and longitude between the current base station and the base station where the mobile station last registered. If this distance measure exceeds the threshold value, the mobile station registers.

The mobile station stores the base station latitude ($BASE\_LAT\_REG_{s-p}$), the base station longitude ($BASE\_LONG\_REG_{s-p}$) and the registration distance ($REG\_DIST\_REG_{s-p}$), of the base station to which the first access probe (for a *Registration Message*, *Origination Message*, *Reconnect Message*, *Call Recovery Request Message*, or *Page Response Message* sent on the r-csch) was transmitted after entering the *System Access State*. The mobile

[32] For example, if the mobile station uses a 2.56 second slot cycle, then it may increment the counter by 32 every time it becomes active.

station shall compute the current base station's distance from the last registration point (DISTANCE) as:

$$\text{DISTANCE} = \lfloor \frac{\sqrt{(\Delta lat)^2 + (\Delta long)^2}}{16} \rfloor,$$

where

Δlat = BASE_LAT$_s$ - BASE_LAT_REG$_{s\text{-}p}$

and

Δlong = (BASE_LONG$_s$ - BASE_LONG_REG$_{s\text{-}p}$) $\times$ cos (π/180 $\times$ BASE_LAT_REG$_{s\text{-}p}$/14400).

The mobile station shall compute DISTANCE with an error of no more than ±5% of its true value when |BASE_LAT_REG$_{s\text{-}p}$/14400| is less than 60 and with an error of no more than ±7% of its true value when |BASE_LAT_REG$_{s\text{-}p}$/14400| is between 60 and 70.[33]

2.6.5.1.5 Zone-Based Registration

Registration zones are groups of base stations within a given system and network. A base station's zone assignment is identified by the REG_ZONE field of the *System Parameters Message*, *ANSI-41 System Parameters Message* or *Mobile Station Registered Message*.

Zone-based registration causes a mobile station to register whenever it determines it is in a new zone (see 2.6.5.5.2.1), not on its internally stored list of visited registration zones. A zone is added to the list whenever a registration (including implicit registration) occurs, and is deleted upon expiration of a timer. After a system access, timers are enabled for every zone except one that was successfully registered by the access.

A mobile station can be registered in more than one zone. Zones are uniquely identified by a zone number (REG_ZONE) plus the SID and NID of the zone.

The mobile station shall store a list of the zones in which the mobile station has registered (ZONE_LIST$_s$). Each entry in ZONE_LIST$_s$ shall include the zone number (REG_ZONE) and the (SID, NID) pair for the zone. The mobile station shall be capable of storing at least N_{9m} entries in ZONE_LIST$_s$. A base station shall be considered to be in ZONE_LIST$_s$ only if the base station's REG_ZONE, SID and NID are found in an entry in ZONE_LIST$_s$. The mobile station provides storage for one entry of ZONE_LIST$_s$ in semi-permanent memory, ZONE_LIST$_{s\text{-}p}$ (see 2.3.4).

The mobile station shall maintain a zone list entry timer for each entry in ZONE_LIST$_s$. When an entry in ZONE_LIST$_s$ is removed from the list, the corresponding zone list entry timer shall be disabled. The timer duration shall be as determined from the stored value of ZONE_TIMER$_s$ using Table 3.7.2.3.2.1-1. The mobile station shall provide a means to examine each timer's value while the timer is active, so that the age of list entries can be compared.

---

[33] BASE_LAT and BASE_LONG are given in units of 1/4 seconds. BASE_LAT/14400 and BASE_LONG/14400 are in units of degrees.

If the mobile station supports one of more band classes that contain multiple frequency block designators, the mobile station shall maintain an identifier of the frequency block designator for each entry in $ZONE\_LIST_S$ (see [45]). When the mobile station adds a zone to $ZONE\_LIST_S$, the mobile station shall include the identifier for the frequency block designator.[34]

If the mobile station supports multiple band classes, the mobile station shall maintain an identifier of the band class for each entry in $ZONE\_LIST_S$ (see [45]). When the mobile station adds a zone to $ZONE\_LIST_S$, the mobile station shall include the identifier for the band class.

The base station controls the maximum number of zones in which a mobile station may be considered registered, by means of the TOTAL_ZONES field of the *System Parameters Message*, *ANSI-41 System Parameters Message* or *Mobile Station Registered Message*. When an entry is added to the zone list, or if TOTAL_ZONES is decreased, the mobile station removes entries from the zone list if there are more entries than allowed by the setting of TOTAL_ZONES.

Whenever $ZONE\_LIST_S$ contains more than $TOTAL\_ZONES_S$ entries, the mobile station shall delete the excess entries according to the following rules:

- If $TOTAL\_ZONES_S$ is equal to zero, the mobile station shall delete all entries.
- If $TOTAL\_ZONES_S$ is not equal to zero, the mobile station shall delete those entries having active zone list entry timers, starting with the oldest entry, as determined by the timer values, and continuing in order of decreasing age until no more than $TOTAL\_ZONES_S$ entries remain.

The mobile station shall store a list of the systems/networks in which the mobile station has registered ($SID\_NID\_LIST_S$). Each entry in $SID\_NID\_LIST_S$ shall include the (SID, NID) pair for the system/network. The mobile station shall be capable of storing N_{10m} entries in $SID\_NID\_LIST_S$. A base station shall be considered to be in the $SID\_NID\_LIST_S$ only if the base station's SID and NID are found in an entry in $SID\_NID\_LIST_S$. The mobile station shall provide storage for one entry of $SID\_NID\_LIST_S$ in semi-permanent memory ($SID\_NID\_LIST_{S\text{-}p}$).

If the mobile station supports one or more band classes that contain multiple frequency block designators, the mobile station shall maintain an identifier of the frequency block designator for each entry in $SID\_NID\_LIST_S$ (see [45]). When the mobile station adds an entry to $SID\_NID\_LIST_S$, the mobile station shall include the identifier for the frequency block designator.

If the mobile station supports multiple band classes, the mobile station shall maintain an identifier of the band class for each entry in $SID\_NID\_LIST_S$ (see [45]). When the mobile

[34] The mobile station need not maintain a separate identifier for Band Class 0, as the least significant bit of the SID identifies the serving system.

station adds an entry to $SID\_NID\_LIST_S$, the mobile station shall include the identifier for the band class.

The mobile station shall maintain a SID/NID list entry timer for each entry in $SID\_NID\_LIST_S$. When an entry in $SID\_NID\_LIST_S$ is removed from the list, the corresponding SID/NID list entry timer shall be disabled. The timer duration shall be as determined from the stored value of $ZONE\_TIMER_S$ using Table 3.7.2.3.2.1-1. The mobile station shall provide a means to examine each timer's value while the timer is active, so that the age of list entries can be compared.

Whenever $SID\_NID\_LIST_S$ contains more than N_{10m} entries, the mobile station shall delete the excess entries according to the following rule:

- The mobile station shall delete those entries having active SID/NID list entry timers, starting with the oldest entry, as determined by the timer values, and continuing in order of decreasing age.

Whenever $MULT\_SIDS_S$ is equal to '0' and SID_NID_LIST contains entries with different SIDs, the mobile station shall delete the excess entries according to the following rules:

- If the SID/NID entry timer for any entry is disabled, the mobile station shall delete all entries not having the same SID as the entry whose timer is disabled;
- Otherwise, the mobile station shall delete all entries not having the same SID as the newest entry in SID_NID_LIST, as determined by the timer values.

Whenever $MULT\_NIDS_S$ is equal to '0', and SID_NID_LIST contains more than one entry for any SID, the mobile station shall delete the excess entries for each SID according to the following rules:

- If the SID/NID entry timer for any entry is disabled, the mobile station shall delete all entries for that SID except the entry whose timer is disabled;
- For all other SIDs, the mobile station shall delete all entries for each SID except the newest entry, as determined by the timer values.

2.6.5.1.6 Parameter-Change Registration

Parameter-change registration is performed when a mobile station modifies any of the following stored parameters:

- The preferred slot cycle index ($SLOT\_CYCLE\_INDEX_p$)
- The station class mark (SCM_p)
- The call termination enabled indicators ($MOB\_TERM\_HOME_p$, $MOB\_TERM\_FOR\_SID_p$, and $MOB\_TERM\_FOR\_NID_p$)

Parameter-change registration is also performed when any of the following capabilities supported by the mobile station changes:

- The band classes
- The band subclasses
- The power classes

- The radio configurations
- The operating modes
- Transmit diversity (OTD or STS)
- Quick Paging Channel
- Spreading Rate 3 common channels support
- Encryption capability

Parameter-change registration is performed whenever there is no entry in the mobile station's $SID\_NID\_LIST_S$ that matches the base station's SID and NID.

Parameter-change registration is independent of the roaming status of the mobile station.[35]

Whenever a parameter changes, the mobile station shall delete all entries from $SID\_NID\_LIST_S$.

2.6.5.1.7 Ordered Registration

The base station can command the mobile station to register by sending a *Registration Request Order*. Ordered registration is performed in the *Mobile Station Order and Message Processing Operation* (2.6.2.4). Requirements are specified in 2.6.5.5.2.3.

2.6.5.1.8 Implicit Registration

Whenever an *Origination Message*, *Reconnect Message*, *Call Recovery Request Message*, or *Page Response Message* is sent, the base station can infer the location of the mobile station. This is considered an implicit registration. Requirements are specified in 2.6.5.5.3.

2.6.5.1.9 Traffic Channel Registration

While a mobile station is assigned a Traffic Channel, the mobile station is notified that it is registered through the *Mobile Station Registered Message*. Requirements are specified in 2.6.5.5.4.3.

2.6.5.1.10 User Zone Registration

User Zone registration is performed when the mobile station selects an active User Zone (see 2.6.9.2.1).

2.6.5.1.11 Encryption/Message Integrity Re-sync Required Registration

Encryption/Message Integrity re-sync required registration is performed when the mobile station determines that it can not decrypt any message or validate the MACI of any message from the base station (see 2.3.12.4.1.3). This type of registration is needed for the

[35] The indicator REG_ENABLED does not govern parameter-change registration.

mobile station to recover from any encryption/message integrity out-of-sync scenario.

2.6.5.1.12 BCMC Registration

BCMC registration is performed when the mobile station is to monitor a BCMC flow that is being transmitted from a band class or frequency different than where the mobile station currently resides. The BCMC registration is also used when the mobile station desires to monitor a BCMC flow configured for transmission which is currently not being transmitted. Requirements are specified in 2.6.13.3.

BCMC registration is performed by a mobile station currently monitoring or desiring to monitor a BCMC flow; it is performed for the following reasons:

1) When the mobile station is to monitor a BCMC flow given by BCMC_FLOW_ID, if the band class or frequency where this BCMC flow is being transmitted is different from the band class or frequency where the mobile station currently resides, the mobile station performs a BCMC registration to inform the base station so that the base station can determine in which frequency to page the mobile station.

2) The BCMC registration is also used when the mobile station desires to monitor a BCMC flow configured for transmission which is currently not being transmitted, the mobile station performs a BCMC registration to request transmission of that flow.

3) When the mobile station is currently monitoring a BCMC flow and the base station turns on the registration required flag in the *BCMC Service Parameters Message*, the mobile station performs a BCMC registration. Requirements are specified in 2.6.13.3.

2.6.5.2 Systems and Networks

A base station is a member of a cellular or PCS system and a network. A network is a subset of a system.

Systems are labeled with an identification called the system identification or SID; networks within a system are given a network identification or NID. A network is uniquely identified by the pair (SID, NID). The SID number 0 is a reserved value. The NID number 0 is a reserved value indicating all base stations that are not included in a specific network. The NID number 65535 (2^{16}-1) is a reserved value the mobile station may use for roaming status determination (see 2.6.5.3) to indicate that the mobile station considers the entire SID (regardless of NID) as home (non-roaming).

Figure 2.6.5.2-1 shows an example of systems and networks. SID i contains three networks labeled t, u, and v. A base station in system i that is not in one of these three networks is in NID 0.

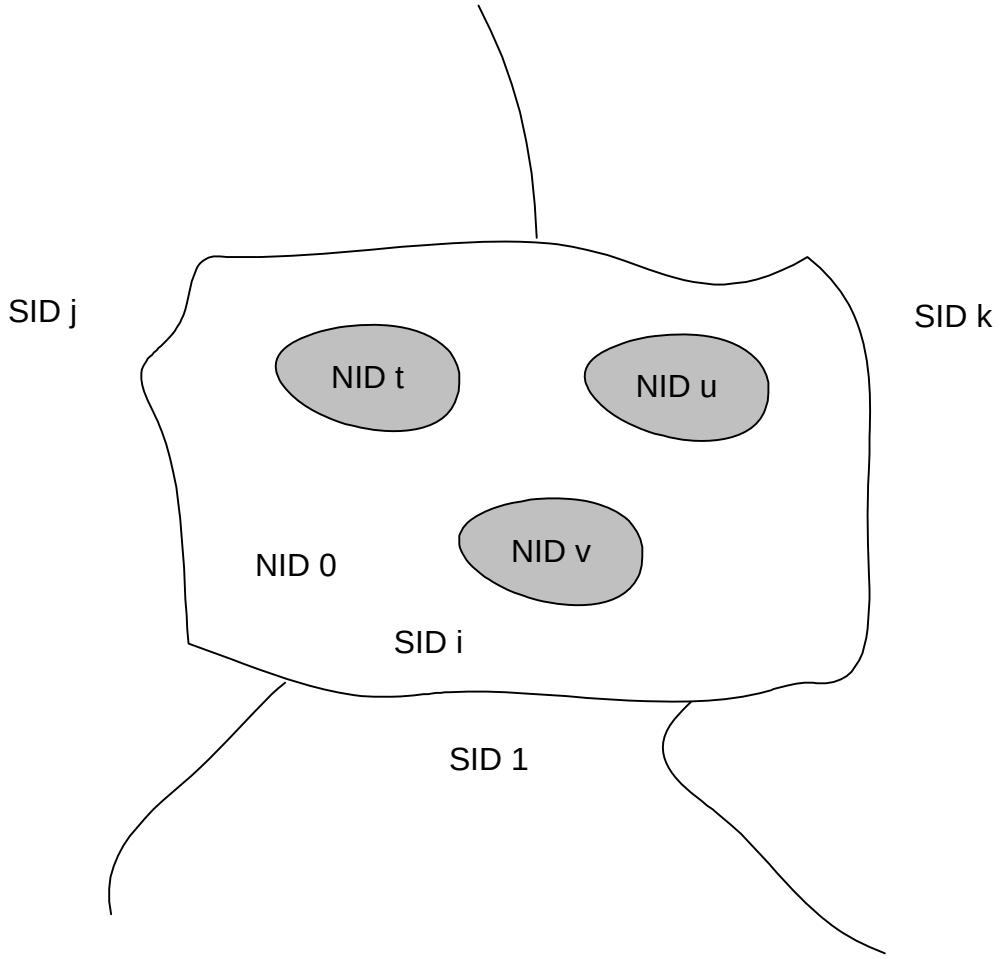

Figure 2.6.5.2-1. Systems and Networks Example

2.6.5.3 Roaming

The mobile station has a list of one or more home (non-roaming) (SID, NID) pairs. A mobile station is roaming if the stored (SID_S, NID_S) pair (received in the *System Parameters Message* on the Paging Channel, or the *ANSI-41 System Parameters Message* on the Primary Broadcast Control Channel) does not match one of the mobile station's non-roaming (SID, NID) pairs. Two types of roaming are defined: A mobile station is a foreign NID roamer if the mobile station is roaming and there is some (SID, NID) pair in the mobile station's (SID, NID) list for which SID is equal to SID_S. A mobile station is a foreign SID roamer if there is no (SID, NID) pair in the mobile station's (SID, NID) list for which SID is

equal to SID_s[36]. The mobile station may use the special NID value 65535 to indicate that the mobile station considers all NIDs within a SID to be non-roaming (i.e., that the mobile station is not roaming when operating with any base station in that system).

The mobile station shall store three 1-bit parameters in its permanent memory (see 2.3.8). These parameters are $MOB\_TERM\_HOME_p$, $MOB\_TERM\_FOR\_SID_p$, and $MOB\_TERM\_FOR\_NID_p$. The mobile station shall set $MOB\_TERM\_HOME_p$ to '1' if the mobile station is configured to receive mobile station terminated calls when using a home (SID, NID) pair; otherwise, the mobile station shall set $MOB\_TERM\_HOME_p$ to '0'. The mobile station shall set $MOB\_TERM\_FOR\_SID_p$ to '1' if the mobile station is configured to receive mobile station terminated calls when it is a foreign SID roamer; otherwise $MOB\_TERM\_FOR\_SID_p$ shall be set to '0'. The mobile station shall set $MOB\_TERM\_FOR\_NID_p$ to '1' if the mobile station is configured to receive mobile station terminated calls when it is a foreign NID roamer; otherwise the mobile station shall set $MOB\_TERM\_FOR\_NID_p$ to '0'.

The mobile station determines the registration status using these parameters and the HOME_REG, FOR_NID_REG, and FOR_SID_REG fields of the *System Parameters Message* or *ANSI-41 System Parameters Message*.

The mobile station shall store a mobile station call termination enabled indicator, MOB_TERM_s. The mobile station shall set MOB_TERM_s to YES if any of the following conditions is met:

- The mobile station is not roaming, and $MOB\_TERM\_HOME_p$ is equal to '1'; or
- The mobile station is a foreign NID roamer and $MOB\_TERM\_FOR\_NID_p$ is equal to '1'; or
- The mobile station is a foreign SID roamer and $MOB\_TERM\_FOR\_SID_p$ is equal to '1'; otherwise the mobile station shall set MOB_TERM_s to NO.

The mobile station shall store a registration status indicator, $REG\_ENABLED_s$. The mobile station shall set the indicator $REG\_ENABLED_s$ to YES if any of the following conditions is met for the mobile station:

- The mobile station is not roaming, and both $HOME\_REG_s$ and $MOB\_TERM\_HOME_p$ are equal to '1'; or
- The mobile station is a foreign NID roamer and both $FOR\_NID\_REG_s$ and $MOB\_TERM\_FOR\_NID_p$ are equal to '1'; or

[36] For example, suppose a mobile station has the following SID, NID list: (2, 3), (2, 0), (3, 1). If the base station (SID, NID) pair is (2, 3), then the mobile station is not roaming because the (SID, NID) pair is in the list. If the base station (SID, NID) pair is (2, 7), then the mobile station is a foreign NID roamer, because the SID 2 is in the list, but the (SID, NID) pair (2, 7) is not in the list. If the base station (SID, NID) pair is (4, 0), then the mobile station is a foreign SID roamer, because SID 4 is not in the list.

- The mobile station is a foreign SID roamer and both $FOR\_SID\_REG_S$ and $MOB\_TERM\_FOR\_SID_p$ are equal to '1'; otherwise the mobile station shall set $REG\_ENABLED_S$ to NO.

The mobile station performs autonomous registrations if $REG\_ENABLED_S$ is YES.

2.6.5.4 Registration Timers and Indicators

The mobile station shall provide the following registration timers:

- Power-up/initialization timer (see 2.6.5.1.1).
- Timer-based registration timer (see 2.6.5.1.3).
- Zone list entry timers (see 2.6.5.1.5).
- SID/NID list entry timers (see 2.6.5.1.5).
- BCMC frequency registration timer (see 2.6.13).
- BCMC registration required timer (see 2.6.13).

The mobile station shall provide a means of enabling and disabling each timer. When a timer is disabled, it shall not be considered expired. A timer that has been enabled is referred to as active.

2.6.5.5 Registration Procedures

2.6.5.5.1 Actions in the Mobile Station Initialization State

2.6.5.5.1.1 Power-Up or Change to a Different Operating Mode, Band Class, Serving System, Frequency Block Designator, or R-UIM Insertion.

Upon power-up, the mobile station shall perform the following actions:

- Delete all entries of $ZONE\_LIST_S$.
- If $ZONE\_LIST_{S-p}$ contains an entry, copy the entry to $ZONE\_LIST_S$ and disable the corresponding entry timer.
- Delete all entries of $SID\_NID\_LIST_S$.
- If $SID\_NID\_LIST_{S-p}$ contains an entry, copy the entry to $SID\_NID\_LIST_S$ and disable the corresponding entry timer.
- Set the registered flag ($REGISTERED_S$) to NO.
- Set timer-based registration enable status ($COUNTER\_ENABLED_S$) to NO.
- Set autonomous registration enable status ($REG\_ENABLED_S$) to NO.
- Set $RETURN\_CAUSE_S$ to '0000'.
- Set KEY_ID, $LAST\_2G\_KEY\_ID_S$, and $LAST\_3G\_KEY\_ID_S$ to '00'.
- Set ENC_KEY[i] and INT_KEY[i] to NULL, where i ranges from '00' to '11'.
- Set $D\_SIG\_ENCRYPT\_MODE_S$ and $C\_SIG\_ENCRYPT\_MODE_S$ to '000'.

- Set RESTORE_KEYS to ‘0’.
- If the UIM contains IK and CK, the mobile station shall set KEY_ID to ‘10’, RESTORE_KEYS to ‘1’, INT_KEY[KEY_ID] to IK, ENC_KEY[KEY_ID] to CK, TX_EXT_SSEQ[.][KEY_ID] and TX_EXT_SSEQ[.][KEY_ID] to any 24-bit value multiplied by 256.

If any of the following conditions is true:

- $BYPASS\_REG\_IND_S$ is equal to ‘00’ and the mobile station has switched from using CDMA
  - in a different band class, or
  - in a different serving system in a band class that supports multiple serving systems (e.g., Band Class 0), or
  - in a different frequency block designator in a band class that supports frequency block designator allocations (e.g. Band Class 1)
- $BYPASS\_REG\_IND_S$ is equal to ‘01’ and, for a reason other than processing the *Extended CDMA Channel List Message*, the mobile station has switched from using CDMA)
  - in a different band class, or
  - in a different serving system in a band class that supports multiple serving systems (e.g., Band Class 0), or
  - in a different frequency block designator in a band class that supports frequency block designator allocations (e.g. Band Class 1)
- $BYPASS\_REG\_IND_S$ is equal to ‘10’, SID_S is different than REG_SID_S and the mobile station has switched from using CDMA
  - in a different band class, or
  - in a different serving system in a band class that supports multiple serving systems (e.g., Band Class 0), or
  - in a different frequency block designator in a band class that supports frequency block designator allocations (e.g. Band Class 1)

the mobile station shall perform the following actions:

- Set timer-based registration enable status ($COUNTER\_ENABLED_S$) to NO.
- Set autonomous registration enable status ($REG\_ENABLED_S$) to NO.
- Set $RETURN\_CAUSE_S$ to ‘0000’.
- Set the registered flag ($REGISTERED_S$) to NO.
- Set KEY_ID, $LAST\_2G\_KEY\_ID_S$, and $LAST\_3G\_KEY\_ID_S$ to ‘00'.
- Set ENC_KEY[i] and INT_KEY[i] to NULL, where i ranges from ‘00’ to ‘11’.
- Set RESTORE_KEYS to ‘0’.

- If the UIM contains IK and CK, the mobile station shall set KEY_ID to '10', RESTORE_KEYS to '1', INT_KEY[KEY_ID] to IK, ENC_KEY[KEY_ID] to CK, TX_EXT_SSEQ[.][KEY_ID] and TX_EXT_SSEQ[.][KEY_ID] to any 24-bit value multiplied by 256.

2.6.5.5.1.2 Timer Maintenance

While in the *Mobile Station Initialization State*, the mobile station shall update all active registration timers (see 2.6.5.4). If any timer expires while in this state, the mobile station shall preserve the expiration status so that further action can be taken in the *Mobile Station Idle State*.

2.6.5.5.1.3 Entering the Mobile Station Idle State

Before entering the *Mobile Station Idle State* from the *Mobile Station Initialization State*, the mobile station shall perform the following action:

- If $REGISTERED_S$ is equal to NO, enable the power-up/initialization timer with an expiration time of T_{57m} seconds (see 2.6.5.1.1) only when the mobile station is entering this state with a power-up indication.

2.6.5.5.2 Actions in the Mobile Station Idle State

Requirements in this section and its subsections apply only when the mobile station is in the *Mobile Station Idle State*.

2.6.5.5.2.1 Idle Registration Procedures

These procedures are performed whenever the mobile station is in the *Mobile Station Idle State* (see 2.6.2.1.3).

While in the *Mobile Station Idle State*, the mobile station shall update all active registration timers (see 2.6.5.4).

If the power-up/initialization timer has expired or is disabled, the mobile station shall perform the following actions in the order given. If any action necessitates a registration, the mobile station shall enter the *Update Overhead Information Substate* of the *System Access State* (see 2.6.3) with a registration indication.

1. The timer-based registration timer shall be enabled ($COUNTER\_ENABLED_S$ = YES) and the timer count (REG_COUNT_S) shall be set to a pseudorandom number as specified in 2.6.5.1.3, if the following conditions are met:
   a. $COUNTER\_ENABLED_S$ is equal to NO; and
   b. The stored configuration parameters are current (see 2.6.2.2); and
   c. $REG\_ENABLED_S$ is equal to YES; and
   d. REG_PRD_S is not equal to zero.
2. If any zone list entry timer (see 2.6.5.1.5) has expired, the mobile station shall delete the corresponding entry from $ZONE\_LIST_S$.

3. If any SID/NID list entry timer (see 2.6.5.1.5) has expired, the mobile station shall delete the corresponding entry from $SID\_NID\_LIST_S$.

4. The mobile station shall perform power-up registration, as specified in 2.6.5.1.1, if all the following conditions are met:

   a. $POWER\_UP\_REG_S$ is equal to '1'; and

   b. The stored configuration parameters are current (see 2.6.2.2); and

   c. $REGISTERED_S$ is equal to NO, and

   d. $REG\_ENABLED_S$ is equal to YES.

5. The mobile station shall perform parameter-change registration (see 2.6.5.1.6) if all the following conditions are met:

   a. $PARAMETER\_REG_S$ is equal to '1'; and

   b. The stored configuration parameters are current (see 2.6.2.2); and

   c. There is no entry of $SID\_NID\_LIST_S$ whose SID and NID fields match the stored SID_S and NID_S.

6. The mobile station shall perform timer-based registration (see 2.6.5.1.3) if all the following conditions are met:

   a. $COUNTER\_ENABLED_S$ is equal to YES; and

   b. The stored configuration parameters are current (see 2.6.2.2); and

   c. $REG\_ENABLED_S$ is equal to YES; and

   d. REG_COUNT_S is greater than or equal to $REG\_COUNT\_MAX_S$.

7. The mobile station shall perform distance-based registration (see 2.6.5.1.4) if all the following conditions are met:

   a. REG_DIST_S is not equal to zero; and

   b. The stored configuration parameters are current (see 2.6.2.2); and

   c. $REG\_ENABLED_S$ is equal to YES; and

   d. The current base station's distance from the base station in which the mobile station last registered (see 2.6.5.1.4) is greater than or equal to $REG\_DIST\_REG_{S\text{-}p}$.

8. The mobile station shall perform zone-based registration (see 2.6.5.1.5) if all the following conditions are met:

   a. $TOTAL\_ZONES_S$ is not equal to zero; and

   b. The stored configuration parameters are current (see 2.6.2.2); and

   c. $REG\_ENABLED_S$ is equal to YES; and

   d. There is no entry of $ZONE\_LIST_S$ whose SID, NID and REG_ZONE fields match the stored SID_S, NID_S and REG_ZONE_S.

9. The mobile station shall perform User Zone registration (see 2.6.2.5.1.10) if it selects an active User Zone (see 2.6.9.1.2).
10. The mobile station shall perform encryption/message integrity re-sync required registration (see 2.6.5.1.11) if all the following conditions are met:
    a. REG_SECURITY_RESYNC is equal to YES or $REGISTER\_IN\_IDLE_S$ is equal to '1'; and
    b. None of the above registrations have been performed since the last entering of the *Mobile Station Idle State*.

2.6.5.5.2.2 Processing the Registration Fields of the System Parameters Message and ANSI-41 System Parameters Message

When the mobile station processes the *System Parameters Message* or *ANSI-41 System Parameters Message*, it shall perform the following actions:

1. If REG_PRD_S is equal to zero, the mobile station shall set $COUNTER\_ENABLED_S$ to NO.
2. If REG_PRD_S is not equal to zero, the mobile station shall set $REG\_COUNT\_MAX_S$ as specified in 2.6.5.1.3.
3. The mobile station shall update its roaming status and set $REG\_ENABLED_S$ as specified in 2.6.5.3.
4. If $ZONE\_LIST_S$ contains more than $TOTAL\_ZONES_S$ entries, the mobile station shall delete the excess entries according to the rules specified in 2.6.5.1.5.
5. If $MULT\_SIDS_S$ is equal to '0' and SID_NID_LIST contains entries with different SIDs, delete the excess entries according to the rules specified in 2.6.5.1.5.
6. If $MULT\_NIDS_S$ is equal to '0' and SID_NID_LIST contains more than one entry for any SID, delete the excess entries according to the rules specified in 2.6.5.1.5.

2.6.5.5.2.3 Ordered Registration

Ordered registration is performed after receiving a *Registration Request Order* while in the *Mobile Station Order and Message Processing Operation* (see 2.6.2.4).

The mobile station shall enter the *Update Overhead Information Substate* of the *System Access State* with a registration indication within T_{33m} seconds after the *Registration Request Order* is received.

2.6.5.5.2.4 Power Off

These procedures are performed when the mobile station is directed by the user to power off.

The mobile station shall perform the following actions:

- If an entry of $ZONE\_LIST_S$ does not have an active timer, copy that entry to $ZONE\_LIST_{S-p}$; otherwise, delete any entry in $ZONE\_LIST_{S-p}$.

- If an entry of $SID\_NID\_LIST_s$ does not have an active timer, copy that entry to $SID\_NID\_LIST_{s-p}$; otherwise, delete any entry in $SID\_NID\_LIST_{s-p}$.

The mobile station shall perform power-down registration (see 2.6.5.1.2) by entering the *System Access State* with a registration indication within T_{33m} seconds after the user directs the mobile station to power off, if all the following conditions are true:

- $REG\_ENABLED_s$ equals YES; and
- $POWER\_DOWN\_REG_s$ equals '1'; and
- There is an entry of $SID\_NID\_LIST_s$ for which the SID and NID fields are equal to SID_s and NID_s; and
- The power-up/initialization timer (see 2.6.5.1.1) is disabled or has expired.

2.6.5.5.2.5 Full-TMSI Timer Expiration

When the mobile station sets all the bits of $TMSI\_CODE_{s-p}$ to '1' upon expiration of the full-TMSI timer (see 2.6.2), the mobile station shall delete all entries from $SID\_NID\_LIST_s$ and $ZONE\_LIST_s$.

2.6.5.5.3 Actions in the System Access State

Requirements in this section and its subsections apply only when the mobile station is in the *System Access State*.

2.6.5.5.3.1 Successful Access, Registration, or Implicit Registration

These procedures shall be performed after the mobile station receives confirmation of delivery of a *Registration Message*, *Origination Message*, *Reconnect Message*, *Call Recovery Request Message*, or *Page Response Message* sent on the r-csch (see 2.6.3.1.2).

- Disable the power-up/initialization timer (see 2.6.5.1.1).
- Set $DIGITAL\_REG_{s-p}$ to '00000001'.
- Set REG_COUNT_s to zero.
- Set $REGISTERED_s$ to YES.
- If an explicit or implicit registration was sent, set SLOT_CYCLE_INDEX_REG to the slot cycle index the mobile station included in the message.
- If $BYPASS\_REG\_IND_s$ is equal to '00', the mobile station shall perform the following:
  - Delete all entries from $ZONE\_LIST_s$ belonging to a different band class (see [45]) than $CDMABAND_s$.
  - If $CDMABAND_s$ contains multiple serving systems, delete all entries from $ZONE\_LIST_s$ that have a SID from a different serving system than $SERVSYS_s$.
  - If $CDMABAND_s$ contains multiple frequency block designators, delete all entries from $ZONE\_LIST_s$ belonging to a different frequency block designator (see [45]) than the frequency block designator associated with REG_SID_s.

- Add $REG\_REG\_ZONE_S$, REG_SID_S, and REG_NID_S to $ZONE\_LIST_S$ if not already in the list. If required, include the band class identifier and block identifier for the current band and frequency block designator as specified in 2.6.5.1.5.
- Disable the zone list entry timer for the entry of $ZONE\_LIST_S$ containing $REG\_REG\_ZONE_S$, REG_SID_S, and REG_NID_S. For any other entry of $ZONE\_LIST_S$ whose entry timer is not active, enable the entry timer with the duration specified by $REG\_ZONE\_TIMER_S$ (see 2.6.5.1.5).
- If $ZONE\_LIST_S$ contains more than $TOTAL\_ZONES_S$ entries, delete the excess entries according to the rules specified in 2.6.5.1.5.
- If $BYPASS\_REG\_IND_S$ is equal to '00', the mobile station shall perform the following:
  - Delete all entries from $SID\_NID\_LIST_S$ belonging to a different band class (see [45]) than $CDMABAND_S$.
  - If $CDMABAND_S$ contains multiple serving systems, delete all entries from $SID\_NID\_LIST_S$ that have a SID from a different serving system than $SERVSYS_S$.
  - If $CDMABAND_S$ contains multiple frequency block designators, delete all entries from $SID\_NID\_LIST_S$ belonging to a different frequency block designator (see [45]) than the frequency block designator associated with REG_SID_S.
- Add REG_SID_S and REG_NID_S to $SID\_NID\_LIST_S$ if not already in the list. If required, include the band class identifier and block identifier for the current band and frequency block designator as specified in 2.6.5.1.5.
- Disable the SID/NID list entry timer for the entry of $SID\_NID\_LIST_S$ containing REG_SID_S, and REG_NID_S. For any other entry of $SID\_NID\_LIST_S$ whose entry timer is not active, enable the entry timer with the duration specified in 2.6.5.1.5.
- If $SID\_NID\_LIST_S$ contains more than N_{10m} entries, delete the excess entries according to the rules specified in 2.6.5.1.5.
- If $MULT\_SIDS_S$ is equal to '0' and SID_NID_LIST contains entries with different REG_SID_S, delete the excess entries according to the rules specified in 2.6.5.1.5.
- If $MULT\_NIDS_S$ is equal to '0' and SID_NID_LIST contains more than one entry for any SID, delete the excess entries according to the rules specified in 2.6.5.1.5.
- Set the stored location of last registration ($BASE\_LAT\_REG_{S\text{-}p}$ and $BASE\_LONG\_REG_{S\text{-}p}$) to the current base station's location ($BASE\_LAT_S$ and $BASE\_LONG_S$). Set the stored registration distance ($REG\_DIST\_REG_{S\text{-}p}$) to the current base station's registration distance (REG_DIST_S).
- Set REG_SECURITY_RESYNC to NO.
- Set $REGISTER\_IN\_IDLE_S$ to '0'.

These procedures shall be performed after the mobile station receives confirmation of delivery of any other message:

- Set $DIGITAL\_REG_{S\text{-}p}$ to '00000001'.

- If $BYPASS\_REG\_IND_S$ is equal to '00', the mobile station shall perform the following:
  - Delete all entries from $ZONE\_LIST_S$ belonging to a different band class (see [45]) than $CDMABAND_S$.
  - If $CDMABAND_S$ contains multiple serving systems, delete from $ZONE\_LIST_S$ all entries from $ZONE\_LIST_S$ that have a SID from a different serving system than $SERVSYS_S$.
  - If $CDMABAND_S$ contains multiple frequency block designators, delete all entries from $ZONE\_LIST_S$ belonging to a different frequency block designator (see [45]) than the frequency block designator associated with SID_S.
- For any entry of $ZONE\_LIST_S$ not matching REG_ZONE_S, SID_S, and NID_S and not having an active entry timer, enable the entry timer with the duration specified by $ZONE\_TIMER_S$ (see 2.6.5.1.5).
- If $BYPASS\_REG\_IND_S$ is equal to '00', the mobile station shall perform the following:
  - Delete all entries from $SID\_NID\_LIST_S$ belonging to a different band class (see [45]) than $CDMABAND_S$.
  - If $CDMABAND_S$ contains multiple serving systems, delete from $SID\_NID\_LIST_S$ all entries from $SID\_NID\_LIST_S$ that have a SID from a different serving system than $SERVSYS_S$.
  - If $CDMABAND_S$ contains multiple frequency block designators, delete all entries from $SID\_NID\_LIST_S$ belonging to a different frequency block designator (see [45]) than the frequency block designator associated with SID_S.
- For any entry of $SID\_NID\_LIST_S$ not matching SID_S and NID_S and not having an active entry timer, enable the entry timer with the duration specified by $ZONE\_TIMER_S$ (see 2.6.5.1.5).

2.6.5.5.3.2 Unsuccessful Access

These procedures are performed when the mobile station declares an access attempt failure when in the *System Access State* (see 2.6.3).

The mobile station shall perform the following actions:

- Set $DIGITAL\_REG_{S\text{-}p}$ to '00000001'.
- If an explicit or implicit registration was sent, set SLOT_CYCLE_INDEX_REG to min(SLOT_CYCLE_INDEX_REG, slot cycle index the mobile station included in the message).
- If $BYPASS\_REG\_IND_S$ is equal to '00', the mobile station shall perform the following:
  - Delete all entries from $ZONE\_LIST_S$ belonging to a different band class (see [45]) than $CDMABAND_S$.

- If $CDMABAND_S$ contains multiple serving systems, delete from $ZONE\_LIST_S$ all entries from $ZONE\_LIST_S$ that have a SID from a different serving system than $SERVSYS_S$.
- If $CDMABAND_S$ contains multiple frequency block designators, delete all entries from $ZONE\_LIST_S$ belonging to a different frequency block designator (see [45]) than the frequency block designator associated with SID_S.

- For any entry of $ZONE\_LIST_S$ not matching REG_ZONE_S, SID_S, and NID_S and not having an active entry timer, enable the entry timer with the duration specified by $ZONE\_TIMER_S$ (see 2.6.5.1.5).
- If $BYPASS\_REG\_IND_S$ is equal to '00', the mobile station shall perform the following:
  - Delete all entries from $SID\_NID\_LIST_S$ belonging to a different band class (see [45]) than $CDMABAND_S$.
  - If $CDMABAND_S$ contains multiple serving systems, delete from $SID\_NID\_LIST_S$ all entries from $SID\_NID\_LIST_S$ that have a SID from a different serving system than $SERVSYS_S$.
  - If $CDMABAND_S$ contains multiple frequency block designators, delete all entries from $SID\_NID\_LIST_S$ belonging to a different frequency block designator (see [45]) than the frequency block designator associated with SID_S.
- For any entry of $SID\_NID\_LIST_S$ not matching SID_S and NID_S and not having an active entry timer, enable the entry timer with the duration specified by $ZONE\_TIMER_S$ (see 2.6.5.1.5).

2.6.5.5.3.3 Power Off

These procedures are performed when the mobile station is directed by the user to power off.

The mobile station shall perform the following actions:

- If an entry of $ZONE\_LIST_S$ does not have an active timer, copy that entry to $ZONE\_LIST_{S\text{-}p}$; otherwise, delete any entry in $ZONE\_LIST_{S\text{-}p}$.
- If an entry of $SID\_NID\_LIST_S$ does not have an active timer, copy that entry to $SID\_NID\_LIST_{S\text{-}p}$; otherwise, delete any entry in $SID\_NID\_LIST_{S\text{-}p}$.

2.6.5.5.4 Actions in the Mobile Station Control on the Traffic Channel State

Requirements in this section and its subsections apply only when the mobile station is in the *Mobile Station Control on the Traffic Channel State*.

2.6.5.5.4.1 Traffic Channel Initialization

Upon entering the *Traffic Channel Initialization Substate* of the *Mobile Station Control on the Traffic Channel State*, the mobile station shall set $COUNTER\_ENABLED_S$ to NO, shall set $TBR\_RAND\_SUPPR\_ENABLE_S$ to '0', and shall set $TBR\_RAND\_WINDOW_S$ to '11'.

2.6.5.5.4.2 Timer Maintenance

While in the *Mobile Station Control on the Traffic Channel State*, the mobile station shall update all active registration timers.

If a zone list entry timer expires, the mobile station shall delete the corresponding entry from $ZONE\_LIST_s$. If a SID/NID list entry timer expires, the mobile station shall delete the corresponding entry from $SID\_NID\_LIST_s$.

2.6.5.5.4.3 Processing the Mobile Station Registered Message

The mobile station receives the *Mobile Station Registered Message* on the Forward Traffic Channel when the mobile station is considered registered for the base station whose location and other parameters are included in the message.

The mobile station shall store the following parameters:

- System identification ($SID_s = SID_r$)
- Network identification ($NID_s = NID_r$)
- Registration zone ($REG\_ZONE_s = REG\_ZONE_r$)
- Number of registration zones to be retained ($TOTAL\_ZONES_s = TOTAL\_ZONES_r$)
- Zone timer length ($ZONE\_TIMER_s = ZONE\_TIMER_r$)
- Multiple SID storage indicator ($MULT\_SIDS_s = MULT\_SIDS_r$)
- Multiple NID storage indicator ($MULT\_NIDS_s = MULT\_NIDS_r$)
- Base station latitude ($BASE\_LAT_s = BASE\_LAT_r$)
- Base station longitude ($BASE\_LONG_s = BASE\_LONG_r$)
- Registration distance ($REG\_DIST_s = REG\_DIST_r$)

The mobile station shall perform the following actions:

- Set $DIGITAL\_REG_{s\text{-}p}$ to '00000001'.
- Add REG_ZONE_s, SID_s, and NID_s to $ZONE\_LIST_s$ if not already in the list. If required, include the band class identifier and block identifier for the current band and frequency block designator as specified in 2.6.5.1.5.
- If $BYPASS\_REG\_IND_s$ is equal to '00', delete all entries from $ZONE\_LIST_s$ belonging to a different band class (see [45]) than $CDMABAND_s$.
- Disable the zone list entry timer for the entry of $ZONE\_LIST_s$ containing REG_ZONE_s, SID_s, and NID_s. For any other entry of $ZONE\_LIST_s$ whose entry timer is not active, enable the entry timer with the duration specified by $ZONE\_TIMER_s$ (see 2.6.5.1.5).
- If $ZONE\_LIST_s$ contains more than $TOTAL\_ZONES_s$ entries, delete the excess entries according to the rules specified in 2.6.5.1.5.
- If $BYPASS\_REG\_IND_s$ is equal to '00', delete all entries from $SID\_NID\_LIST_s$ belonging to a different band class (see [45]) than $CDMABAND_s$.

- Add SID_s and NID_s to $SID\_NID\_LIST_s$ if not already in the list. If required, include the band class identifier and block identifier for the current band and frequency block designator as specified in 2.6.5.1.5.
- Disable the SID/NID list entry timer for the entry of $SID\_NID\_LIST_s$ containing SID_s, and NID_s. For any other entry of $SID\_NID\_LIST_s$ whose entry timer is not active, enable the entry timer with the duration specified in 2.6.5.1.5.
- If $SID\_NID\_LIST_s$ contains more than N_{10m} entries, delete the excess entries according to the rules specified in 2.6.5.1.5.
- If $MULT\_SIDS_s$ is equal to '0' and SID_NID_LIST contains entries with different SIDs, delete the excess entries according to the rules specified in 2.6.5.1.5.
- If $MULT\_NIDS_s$ is equal to '0' and SID_NID_LIST contains more than one entry for any SID, delete the excess entries according to the rules specified in 2.6.5.1.5.
- Set the stored location of last registration ($BASE\_LAT\_REG_{s-p}$ and $BASE\_LONG\_REG_{s-p}$) to the base station's location ($BASE\_LAT_s$ and $BASE\_LONG_s$). Set the stored registration distance ($REG\_DIST\_REG_{s-p}$) to the base station's registration distance (REG_DIST_s).
- Update its roaming status and set MOB_TERM_s as specified in 2.6.5.3. The mobile station should indicate to the user whether the mobile station is roaming.

2.6.5.5.4.4 Power Off

These procedures are performed when the mobile station is directed by the user to power off.

The mobile station shall perform the following actions:

- If an entry of $ZONE\_LIST_s$ does not have an active timer, copy that entry to $ZONE\_LIST_{s-p}$; otherwise, delete the entry in $ZONE\_LIST_{s-p}$ if $ZONE\_LIST_{s-p}$ contains an entry.
- If an entry of $SID\_NID\_LIST_s$ does not have an active timer, copy that entry to $SID\_NID\_LIST_{s-p}$; otherwise, delete the entry in $SID\_NID\_LIST_{s-p}$ if $SID\_NID\_LIST_{s-p}$ contains an entry.

2.6.6 Handoff Procedures

This section presents an overview and mobile station requirements for handoffs occurring while the mobile station is in the *Mobile Station Control on the Traffic Channel State* (see 2.6.4). Mobile station requirements for handoffs occurring while the mobile station is in the *Mobile Station Idle State* are specified in 2.6.2.1.4.

2.6.6.1 Overview

2.6.6.1.1 Types of Handoff

The mobile station supports the following three handoff procedures while in the *Mobile Station Control on the Traffic Channel State*:

- *Soft Handoff:* A handoff in which the mobile station commences communications with a new base station without interrupting communications with the old base station. Soft handoff can only be used between CDMA Channels having identical Frequency Assignments. Soft handoff provides diversity of Forward Traffic Channels and Reverse Traffic Channel paths on the boundaries between base stations.
- *CDMA-to-CDMA Hard Handoff:* A handoff in which the mobile station is transitioned between disjoint sets of base stations, different band classes, different Frequency Assignments, or different frame offsets.

The mobile station shall support soft handoffs on the same Frequency Assignment (see 2.6.6.2.7). The mobile station shall support CDMA-to-CDMA hard handoffs between band classes on which it supports CDMA operation (see 2.6.6.2.8).

2.6.6.1.2 Pilot Sets

Within section 2.6.6 the term pilot refers to a Pilot Channel identified by a pilot sequence offset (see [2]), a Walsh function or a quasi-orthogonal function (see [2]), and a Frequency Assignment (see [2]). A pilot is associated with the Forward Traffic Channels in the same Forward CDMA Channel. All pilots in a pilot set have the same CDMA Frequency Assignment.

The mobile station searches for pilots on the current CDMA Frequency Assignment to detect the presence of CDMA Channels and to measure their strengths. When the mobile station detects a pilot of sufficient strength that is not associated with any of the Forward Traffic Channels assigned to it, it sends a *Pilot Strength Measurement Message* or an *Extended Pilot Strength Measurement Message* to the base station[37]. The base station can then assign a Forward Traffic Channel associated with that pilot to the mobile station and direct the mobile station to perform a handoff.

The pilot search parameters and the rules for *Pilot Strength Measurement Message* or *Extended Pilot Strength Measurement Message* transmission are expressed in terms of the following sets of pilots:

- *Active Set:* The pilots associated with the Forward Traffic Channels assigned to the mobile station.
- *Candidate Set:* The pilots that are not currently in the Active Set but have been received by the mobile station with sufficient strength to indicate that the associated Forward Traffic Channels could be successfully demodulated.

[37] The mobile station may send a Handoff Supplementary Information Notification message to the base station if a message that mobile station is sending includes a Pilot for which the base station may require supplementary information. For example, the mobile station may send this message along with PSMM or EPSMM message.

- *Neighbor Set:* The pilots that are not currently in the Active Set or the Candidate Set and are likely candidates for handoff.
- *Remaining Set:* The set of all possible pilots in the current system on the current CDMA Frequency Assignment, excluding the pilots in the Neighbor Set, the Candidate Set, and the Active Set. This set of possible pilots consists of pilots whose pilot PN sequence offset indices are integer multiples of $PILOT\_INC_S$.

The base station may direct the mobile station to search for pilots on a different CDMA frequency to detect the presence of CDMA Channels and to measure their strengths. The mobile station reports the results of the search to the base station using the *Candidate Frequency Search Report Message*. Depending upon the pilot strength measurements reported in the *Candidate Frequency Search Report Message*, the base station can direct the mobile station to perform an inter-frequency hard handoff.

The pilot search parameters are expressed in terms of the following sets of pilots on the CDMA Candidate Frequency:

- *Candidate Frequency Neighbor Set:* A list of pilots on the CDMA Candidate Frequency.
- *Candidate Frequency Search Set:* A subset of the Candidate Frequency Neighbor Set that the base station may direct the mobile station to search.

2.6.6.2 Requirements

2.6.6.2.1 Pilot Search

For the pilot sets defined in 2.6.6.1.2, the base station sets the search window (range of PN offsets) in which the mobile station is to search for usable multipath components (i.e., multipath components that the mobile station can use for demodulation of the associated Forward Traffic Channel) of the pilots in the set.

Search performance criteria are defined in [11].

This search shall be governed by the following:

- *Active Set and Candidate Set*: The search procedures for pilots in the Active Set and Candidate Set shall be identical. The search window size[38] for each pilot in the Active Set and Candidate Set shall be the number of PN chips specified in Table 2.6.6.2.1-1 corresponding to $SRCH\_WIN\_A_S$. The mobile station should center the search window for each pilot of the Active Set and Candidate Set around the earliest arriving usable multipath component of the pilot. If the mobile station receives a value greater than or equal to 13 for $SRCH\_WIN\_A_r$, it may store and use the value 13 in $SRCH\_WIN\_A_S$.

[38] The table defines the entire search range. For example, $SRCH\_WIN\_A_S = 6$ corresponds to a 28 PN chip search window or ±14 PN chips around the search window center.

Table 2.6.6.2.1-1. Searcher Window Sizes

SRCH_WIN_A SRCH_WIN_N SRCH_WIN_NGHBR SRCH_WIN_R CF_SRCH_WIN_N	window_size (PN chips)	SRCH_WIN_A SRCH_WIN_N SRCH_WIN_NGHB R SRCH_WIN_R CF_SRCH_WIN_N	window_size (PN chips)
0	4	8	60
1	6	9	80
2	8	10	100
3	10	11	130
4	14	12	160
5	20	13	226
6	28	14	320
7	40	15	452

Table 2.6.6.2.1-2. Search Window Offset

SRCH_OFFSET_NGHBR CF_SRCH_OFFSET_NGHBR	Offset (PN chips)
0	0
1	window_size/2
2	window_size
3	3 × window_size /2
4	- window_size /2
5	- window_size
6	-3 × window_size /2
7	Reserved

- *Neighbor Set*: If $SRCH\_WIN\_NGHBR\_INCL_S$ is equal to '1', the search window size for each pilot in the Neighbor Set shall be the number of PN chips specified in Table 2.6.6.2.1-1, corresponding to $SRCH\_WIN\_NGHBR_S$ associated with the pilot being searched. If $SRCH\_WIN\_NGHBR\_INCL_S$ is equal to '0', the search window size for each pilot in the Neighbor Set shall be the number of PN chips specified in Table 2.6.6.2.1-1 corresponding to $SRCH\_WIN\_N_S$. If $SRCH\_OFFSET\_INCL_S$ is equal to '1', the search window offset for each pilot in the Neighbor Set shall be the number of PN chips specified in Table 2.6.6.2.1-2, corresponding to $SRCH\_OFFSET\_NGHBR_S$ associated with the pilot being searched. If $SRCH\_OFFSET\_INCL_S$ is equal to '0', the search window offset for each pilot in the Neighbor Set shall be zero PN chip. The mobile station should center the search window for each pilot in the Neighbor Set around the pilot's PN sequence offset plus the corresponding search window offset, using timing defined by the mobile station's time reference (see [2]). If $SEARCH\_PRIORITY\_INCL_S$ is equal to '1', the mobile station should use $SEARCH\_PRIORITY_S$ for the corresponding pilot to schedule its neighbor search. If the mobile station supports hopping pilot beacons and the TIMING_INCL field of the NGHBR_REC for the corresponding pilot is equal to '1', then the mobile station shall use the information included in the NGHBR_TX_OFFSET, NGHBR_TX_DURATION, and NGHBR_TX_PERIOD fields of the NGHBR_REC for the corresponding pilot to schedule the time for searching the neighbor. If ADD_PILOT_REC_INCL field of the NGHBR_REC for the corresponding pilot is equal to '1', the mobile station shall use the information included in the NGHBR_PILOT_REC field for searching the neighbor.

- *Remaining Set:* The search window size for each pilot in the Remaining Set shall be the number of PN chips specified in Table 2.6.6.2.1-1 corresponding to $SRCH\_WIN\_R_S$. The mobile station should center the search window for each pilot in the Remaining Set around the pilot's PN sequence offset, using timing defined by the mobile station's time reference (see [2]). The mobile station should only search for Remaining Set pilots whose pilot PN sequence offset indices are equal to integer multiples of $PILOT\_INC_S$.

- *Candidate Frequency Search Set:* If $CF\_SRCH\_WIN\_NGHBR\_INCL_S$ is equal to '1', the search window size for each pilot in the Candidate Frequency Search Set shall be the number of PN chips specified in Table 2.6.6.2.1-1, corresponding to $SRCH\_WIN\_NGHBR_S$ associated with the pilot being searched. If $CF\_SRCH\_WIN\_NGHBR\_INCL_S$ is equal to '0', the search window size for each pilot in the Candidate Frequency Search Set shall be the number of PN chips specified in Table 2.6.6.2.1-1 corresponding to $CF\_SRCH\_WIN\_N_S$. If $CF\_SRCH\_OFFSET\_INCL_S$ is equal to '1', the search window offset for each pilot in the Candidate Frequency Search Set shall be the number of PN chips specified in Table 2.6.6.2.1-2, corresponding to $SRCH\_OFFSET\_NGHBR_S$ associated with the pilot being searched. If $CF\_SRCH\_OFFSET\_INCL_S$ is equal to '0', the search window offset for each pilot in the Candidate Frequency Search Set shall be zero PN chips. The mobile station should center the search window for each pilot in the Candidate Frequency Search Set around the pilot's PN sequence offset plus the corresponding search window offset using timing defined by the mobile station's time reference (see [2]). If $CF\_SEARCH\_PRIORITY\_INCL_S$ is equal to '1', the mobile station should use $SEARCH\_PRIORITY_S$ associated with each pilot to schedule a search of its Candidate Frequency Search Set.

2.6.6.2.2 Pilot Strength Measurements

The mobile station assists the base station in the handoff process and in the Reverse Supplemental Code Channel operation and in the Reverse Supplemental Channel operation by measuring and reporting the strengths of received pilots.

For an SR1 pilot, the mobile station should use the searcher element (see [2]) to compute the strength of a pilot (PS) by adding the ratios of received pilot energy per chip, E_C, to total received spectral density (noise and signals), I_O, of at most k usable multipath components, where k is the number of demodulating elements (see [2]) supported by the mobile station.

For an SR3 pilot, the pilot strength is given by

$$\frac{1}{3}\times\left(\left(\frac{E_c}{I_o}\right)_{Primary}+\frac{\left(\frac{E_c}{I_o}\right)_1}{\Delta_1}+\frac{\left(\frac{E_c}{I_o}\right)_2}{\Delta_2}\right)$$ where:

- $\left(\frac{E_c}{I_o}\right)_{Primary}$ is the pilot Ec/Io measured on the Primary carrier (computed as specified above for SR1 pilots),

- $\left(\frac{E_c}{I_o}\right)_1$ is the pilot Ec/Io measured on the pilot on the lower frequency of the two remaining SR3 frequencies (computed as specified above for SR1 pilots), and Δ_1 is

the pilot power level on the lower frequency of the two remaining SR3 frequencies relative to that of the primary SR3 pilot, i.e. $\Delta_1 = 10^{(-\text{SR3\_PILOT\_POWER1}/10)}$.

- $\left(\frac{E_c}{I_o}\right)_2$ is the pilot Ec/Io measured on the pilot on the higher frequency of the two remaining SR3 frequencies (computed as specified above for SR1 pilots), and Δ_2 is the pilot power level on the higher frequency of the two remaining SR3 frequencies relative to that of the primary SR3 pilot, i.e. $\Delta_2 = 10^{(-\text{SR3\_PILOT\_POWER2}/10)}$.

2.6.6.2.3 Handoff Drop Timer

The mobile station shall maintain a handoff drop timer for each pilot in the Active Set and Candidate Set.

If P_REV_IN_USE_S is less than or equal to three or SOFT_SLOPE_S is equal to '000000', the mobile station shall perform the following:

- For the Candidate Set, the mobile station shall start the timer whenever the strength of the corresponding pilot becomes less than T_DROP_S. The mobile station shall reset and disable the timer if the strength of the corresponding pilot exceeds T_DROP_S.
- For the Active Set, the mobile station shall start the timer whenever the strength of the corresponding pilot becomes less than T_DROP_S. The mobile station shall reset and disable the timer if the strength of the corresponding pilot exceeds T_DROP_S.

If P_REV_IN_USE_S is greater than three and SOFT_SLOPE_S is not equal to '000000', the mobile station shall perform the following:

- For the Candidate Set, the mobile station shall start the timer whenever the strength of the corresponding pilot becomes less than T_DROP_S. The mobile station shall reset and disable the timer if the strength of the corresponding pilot exceeds T_DROP_S.
- For the Active Set, the mobile station shall sort the N_A pilots in the Active Set in order of increasing strengths, i.e., $PS_1 < PS_2 < PS_3 < \ldots < PS_{N_A}$ where the strength PS is as defined in 2.6.6.2.2. The mobile station shall start the timer whenever the strength PS_i satisfies the following inequality:

$$10 \times \log_{10} PS_i < \max\left(\frac{\text{SOFT\_SLOPE}_s}{8} \times 10 \times \log_{10} \sum_{j>i} PS_j + \frac{\text{DROP\_INTERCEPT}_s}{2}, -\frac{\text{T\_DROP}_s}{2}\right)$$

$$i = 1, 2, \ldots, PS_{N_A - 1}$$

For the Active Set, the mobile station shall start the timer even if the timer has previously expired. The mobile station shall reset and disable the timer whenever the above inequality is not satisfied for the corresponding pilot.

If $T\_TDROP\_RANGE_S$ is equal to '0000' or if $P\_REV\_IN\_USE_S$ is less than 9, then the mobile station shall perform the following:

- If T_TDROP_S equals zero, the mobile station shall consider the timer expired within 100 ms of enabling it.
- Otherwise, the mobile station shall consider the timer expired within 10% of the timer expiration value shown in Table 2.6.6.2.3-1 corresponding to T_TDROP_S. If T_TDROP_S changes, the mobile station shall begin using the new value for all handoff drop timers within 100 ms.

Table 2.6.6.2.3-1. Handoff Drop Timer Expiration Values

T_TDROP	Timer Expiration (seconds)	T_TDROP	Timer Expiration (seconds)
0	0.1	8	27
1	1	9	39
2	2	10	55
3	4	11	79
4	6	12	112
5	9	13	159
6	13	14	225
7	19	15	319

Otherwise, the mobile shall perform the following:

- The mobile station shall select the timer expiration value as follows:
  - The mobile station shall select the timer expiration value greater than or equal to the minimum drop timer value computed as:

    max (0.1 seconds, range-based minimum timer expiration value),

    where the range-based minimum timer expiration value equals:

    (nominal timer expiration value) – (timer expiration range value),

    where:

    - the nominal timer expiration value is the timer expiration value in Table 2.6.6.2.3-1 corresponding to T_TDROP_S and,
    - the timer expiration range value is the timer expiration range value in Table 2.6.6.2.3-2 corresponding to $T\_TDROP\_RANGE_S$.
  - The mobile station shall select the timer expiration value less than or equal to the maximum drop timer value which equals:

(nominal timer expiration value) + (timer expiration range value),

where:

- the nominal timer expiration value is the timer expiration value in Table 2.6.6.2.3-1 corresponding to T_TDROP_S and,
- the timer expiration range value is the timer expiration range value in Table 2.6.6.2.3-2 corresponding to $T\_TDROP\_RANGE_S$.

– If the mobile station selected a timer expiration value of 0.1s then the mobile station shall consider the timer expired within 100 ms of enabling it.

Table 2.6.6.2.3-2. Handoff Drop Timer Expiration Range Values

T_TDROP_ RANGE [binary]	Timer Expiration Range (seconds)	T_TDROP _RANGE [binary]	Timer Expiration Range (seconds)
0000	0	1000	27
0001	1	1001	39
0010	2	1010	55
0011	4	1011	79
0100	6	1100	112
0101	9	1101	159
0110	13	1110	225
0111	19	1111	319

The mobile station shall indicate the status of the handoff drop timer for all pilots in the Active Set and Candidate Set when transmitting a *Pilot Strength Measurement Message* or an *Extended Pilot Strength Measurement Message*.

2.6.6.2.4 Pilot PN Phase

The mobile station shall measure the arrival time, PILOT_ARRIVAL, for each pilot reported to the base station. The pilot arrival time shall be the time of occurrence, as measured at the mobile station antenna connector, of the earliest arriving usable multipath component of the pilot (for SR3 pilots, it is based on the earliest arriving usable multipath component from all three carriers). The arrival time shall be measured relative to the mobile station's time reference (see [2]) in units of PN chips. The mobile station shall compute the reported pilot PN phase, PILOT_PN_PHASE, as

$$\text{PILOT\_PN\_PHASE} = (\text{PILOT\_ARRIVAL} + (64 \times \text{PILOT\_PN})) \bmod 2^{15},$$

where PILOT_PN is the PN sequence offset index of the pilot (see [2]).

2.6.6.2.5 Handoff Messages

2.6.6.2.5.1 Processing of Forward Traffic Channel Handoff Messages

If the mobile station receives any of the following messages, then the mobile station shall process the message as described.

1. *Pilot Measurement Request Order:* The mobile station shall send, within T_{56m} seconds, a *Pilot Strength Measurement Message* if $P\_REV\_IN\_USE_S$ is less than seven or a *Extended Pilot Strength Measurement Message* if $P\_REV\_IN\_USE_S$ is equal to or greater than seven.
2. Reserved
3. *Neighbor List Update Message:* If $P\_REV\_IN\_USE_S$ is greater than or equal to eight, the mobile station shall send a *Mobile Station Reject Order* with the ORDQ field set to '00000010' (message not accepted in this state); otherwise, the mobile station shall process the message as specified in 2.6.6.2.6.3 and set $SEARCH\_PRIORITY\_INCL_S$, $SRCH\_WIN\_NGHBR\_INCL_S$, and $SRCH\_OFFSET\_INCL_S$ to '0', and set TIMING_INCL for each of the neighboring base stations in the *Neighbor List Update Message* to '0'.
4. *Extended Handoff Direction Message:* The mobile station shall process the message as follows:

   The mobile station shall send a *Mobile Station Reject Order* with the ORDQ field set to '00000110' (capability not supported), if the mobile station does not support the band class specified in the *Extended Handoff Direction Message*.

   If the mobile station does not send a *Mobile Station Reject Order* in response to the *Extended Handoff Direction Message*, the mobile station shall perform the following at the action time of the message:

   - The mobile station shall send a *Handoff Completion Message* or an *Extended Handoff Completion Message* as specified in 2.6.6.2.5.2.
   - Update the Active Set, Candidate Set, and Neighbor Set in accordance with the *Extended Handoff Direction Message* processing (see 2.6.6.2.6.1, 2.6.6.2.6.2, and 2.6.6.2.6.3).
   - The mobile station shall delete all pilots that are not listed in the Active Set from the Active Set of the Supplemental Channel for the Forward Supplemental Channel Assignment (if any). If these deleted pilots include all pilots in the Active Set of the Supplemental Channel, the mobile station shall cancel the Forward Supplemental Channel Assignment.
   - Discontinue use of all Forward Traffic Channels associated with pilots not listed in the *Extended Handoff Direction Message*.
   - The mobile station shall update the Code Channel List, $CODE\_CHAN\_LIST_S$, as specified in 2.6.8.

- If the mobile station is currently processing Forward Supplemental Code Channels, then it shall continue processing the Forward Supplemental Code Channels using the updated Code Channel List, $CODE\_CHAN\_LIST_s$.
- The mobile station shall set $IGNORE\_SCAM_s$ and $IGNORE\_ESCAM_s$ to '0'.
- If HARD_INCLUDED is equal to '1', perform the following actions:
  - If $FRAME\_OFFSET_r$ is not equal to $FRAME\_OFFSET_s$, change the frame offset on all of the code channels of the Forward Traffic Channel and of the Reverse Traffic Channel.
  - If $RESET\_L2_r$ is equal to '1', Layer 3 shall send a L2-Supervision.Request primitive to Layer 2 to reset the acknowledgment procedures as specified in [4]. The acknowledgment procedures shall be reset immediately after the action time of the *Extended Handoff Direction Message*.
  - If $RESET\_FPC_r$ is equal to '1', initialize the Forward Traffic Channel power control counters as specified in 2.6.4.1.1.1.
  - If $SERV\_NEG\_TYPE_r$ is equal to '1', set $SERV\_NEG_s$ to enabled; otherwise set $SERV\_NEG_s$ to disabled.
  - Use the long code mask as follows:
    - If $PRIVATE\_LCM_r$ equals '1', the mobile station shall use the Private Long Code Mask as specified in 2.3.6.
    - If $PRIVATE\_LCM_r$ equals '0', the mobile station shall use the Public Long Code Mask derived from $PLCM\_TYPE_s$ as specified in 2.3.6.
    - The mobile station shall indicate to the user the voice privacy mode status.
  - Process the ENCRYPT_MODE field as specified in 2.3.12.2.
- Store the following parameters from the current configuration:
  - Serving Frequency Assignment ($SF\_CDMACH_s = CDMACH_s$)
  - Serving Frequency band class ($SF\_BAND\_CLASS_s = BAND\_CLASS_s$)
  - Serving Frequency frame offset ($SF\_FRAME\_OFFSET_s = FRAME\_OFFSET_s$)
- If HARD_INCLUDED is not equal to '1', set $NUM\_PREAMBLE_s$ = '000'.
- Store the following parameters from the *Extended Handoff Direction Message*:
  - *Extended Handoff Direction Message* sequence number ($HDM\_SEQ_s = HDM\_SEQ_r$)
  - If SEARCH_INCLUDED is equal to '1', then store the following:
    - Search window size for the Active Set and Candidate Set ($SRCH\_WIN\_A_s = SRCH\_WIN\_A_r$)
    - Pilot detection threshold ($T\_ADD_s = T\_ADD_r$)
    - Pilot drop threshold ($T\_DROP_s = T\_DROP_r$)

+ Active Set versus Candidate Set comparison threshold ($T\_COMP_s = T\_COMP_r$)
+ Drop timer value ($T\_TDROP_s = T\_TDROP_r$)

– If HARD_INCLUDED is equal to '1', then store the following:
+ Frame offset ($FRAME\_OFFSET_s = FRAME\_OFFSET_r$)
+ Nominal power setting of the target cell ($NOM\_PWR_s = NOM\_PWR_r$)
+ Hard handoff traffic channel preamble count required before transmitting *Handoff Completion Message* or *Extended Handoff Completion Message* ($NUM\_PREAMBLE_s = NUM\_PREAMBLE_r$)
+ CDMA band class ($CDMABAND_s = BAND\_CLASS_r$)
+ Frequency assignment ($CDMACH_s = CDMA\_FREQ_r$)
+ Nominal power setting of the target cell (If $CDMABAND_s$ = '00000' or $CDMABAND_s$ = '00011', then $NOM\_PWR\_EXT_s$ = '0'; otherwise, $NOM\_PWR\_EXT_s = NOM\_PWR\_EXT_r$)

– One occurrence of PILOT_PN and PWR_COMB_IND for each included member of the Active Set.

– If ADD_LENGTH is not equal to '000', then store the following:
+ Protocol revision level ($P\_REV_s = P\_REV_r$)
+ Protocol revision level currently in use ($P\_REV\_IN\_USE_s$ = the minimum value of P_REV_s and $MOB\_P\_REV_p$ of the current band class)

– Disable return on failure ($RETURN\_IF\_HANDOFF\_FAIL_s$ = '0')

• Perform a soft or hard handoff depending on the following conditions:

– If any of the following conditions is true, the mobile station shall perform a hard handoff:
+ HARD_INCLUDED is set to '1' and either $BAND\_CLASS_r$ is not equal to $SF\_CDMABAND_s$, $CDMA\_FREQ_r$ is not equal to SF_CDMACH_s, or $FRAME\_OFFSET_r$ is not equal to $SF\_FRAME\_OFFSET_s$, or
+ The set of pilots specified by the message is disjoint from the Active Set prior to the action time of the message.

– If the mobile station performs a hard handoff, it shall perform the following:
+ If a Periodic Serving Frequency Pilot Report Procedure is in progress, abort the procedure (see 2.6.6.2.12).
+ If a Candidate Frequency periodic search is in progress, abort the periodic search (see 2.6.6.2.8.3.4 and 2.6.6.2.10.4) and set $PERIODIC\_SEARCH_s$ to '0'.
+ The mobile station shall cancel the Forward Supplemental Channel assignment or the Reverse Supplemental Channel assignment (if any).

+ Perform the actions specified in 2.6.6.2.8.1. If the message specifies more than one pilot, the mobile station shall also perform the actions specified in 2.6.6.2.7.1 and 2.6.6.2.7.2.

– Otherwise, the mobile station shall perform a soft handoff as specified in 2.6.6.2.7.

5. *Candidate Frequency Search Request Message:* The mobile station shall process the message as follows:

The mobile station shall send a *Mobile Station Reject Order* with the ORDQ field set to '00000110' (capability not supported), if the following condition is true:

- $SEARCH\_MODE_r$ is not equal to '0000', and the mobile station does not support the capability specified by $SEARCH\_MODE_r$.

If none of the above conditions is true, the mobile station shall perform the actions described in the remainder of this section to process the *Candidate Frequency Search Request Message*.

If $SEARCH\_MODE_r$ is equal to '0000', the mobile station shall process the *Candidate Frequency Search Request Message* as follows:

- The mobile station shall send a *Mobile Station Reject Order* with the ORDQ field set to '00001100' (invalid Frequency Assignment), if the Frequency Assignment specified in the message is the same as the Serving Frequency ($BAND\_CLASS_r$ is equal to $CDMABAND_s$ and $CDMA\_FREQ_r$ is equal to $CDMACH_s$).

- The mobile station shall send a *Mobile Station Reject Order* with the ORDQ field set to '00001010' (search set not specified), if $SEARCH\_TYPE_r$ is equal to '01' or '11', and one of the following conditions is true:

  – $PILOT\_UPDATE_r$ is equal to '0' and the Candidate Frequency Search Set before the action time of the *Candidate Frequency Search Request Message* is empty, or

  – $PILOT\_UPDATE_r$ is equal to '1' and the message specifies an empty search set.

- The mobile station shall send a *Mobile Station Reject Order* with the ORDQ field set to '00001101' (search period too short), if $SEARCH\_TYPE_r$ is equal to '11' and *search_period* is less than (max (*fwd_time*, *rev_time*) + T_{71m}) seconds, where *search_period*, *fwd_time* and *rev_time* are defined below.

  (In the following, if $PILOT\_UPDATE_r$ is equal to '1', *rec_search_set* is the set of pilots specified in the *Candidate Frequency Search Request Message* with the corresponding SEARCH_SET field set to '1'; otherwise, *rec_search_set* is the Candidate Frequency Search Set before the action time of the *Candidate Frequency Search Request Message*.)

  search_period = time period corresponding to $SEARCH\_PERIOD_r$ shown in Table 2.6.6.2.8.3.2-1

fwd_time = the mobile station's estimate of the total length of time, in seconds, for which the mobile station will need to suspend its current Forward Traffic Channel processing in order to tune to the Candidate Frequency, to search *rec_search_set*, and to re-tune to the Serving Frequency; if the mobile station searches *rec_search_set* in multiple visits, *fwd_time* is the total time for all visits to the Candidate Frequency in a search period (see 2.6.6.2.8.3.2)

rev_time = the mobile station's estimate of the total length of time, in seconds, for which the mobile station will need to suspend its current Reverse Traffic Channel processing in order to tune to the Candidate Frequency, to search *rec_search_set*, and to re-tune to the Serving Frequency; if the mobile station searches *rec_search_set* in multiple visits, *rev_time* is the total time for all visits to the Candidate Frequency in a search period

- If the mobile station does not send a *Mobile Station Reject Order* in response to the *Candidate Frequency Search Request Message*, it shall perform the following:
  - The mobile station shall send a *Candidate Frequency Search Response Message* in assured mode, within T_{56m} seconds of receiving the *Candidate Frequency Search Request Message*. The mobile station shall set the fields of the *Candidate Frequency Search Response Message* as follows:
    - The mobile station shall set TOTAL_OFF_TIME_FWD and TOTAL_OFF_TIME_REV to its estimate of the total number of frames or power control groups for which it will need to suspend its current Forward Traffic Channel processing and Reverse Traffic Channel processing, respectively, in order to tune to the Candidate Frequency, to search *rec_search_set*, and to re-tune to the Serving Frequency (see 2.6.6.2.8.3.2). If the mobile station searches *rec_search_set* in multiple visits to the Candidate Frequency, the mobile station shall report the total number of frames or power control groups in all visits in a search period for which it will need to suspend its current Forward Traffic Channel and the Reverse Traffic Channel processing.
    - The mobile station shall set MAX_OFF_TIME_FWD and MAX_OFF_TIME_REV to its estimate of the maximum number of frames or power control groups for which it will need to suspend its current Forward Traffic Channel processing and Reverse Traffic Channel processing, respectively, during any single visit to tune to the Candidate Frequency, to search a subset of *rec_search_set*, and to re-tune to the Serving Frequency.[39]

[39] If the mobile station searches the entire Candidate Frequency Search Set in a single visit to the

(footnote continued on next page)

+ The mobile station shall set PCG_OFF_TIMES to ‘1’ if TOTAL_OFF_TIME_FWD, MAX_OFF_TIME_FWD, TOTAL_OFF_TIME_REV and MAX_OFF_TIME_REV are expressed in units of power control groups. If these time estimates are expressed in units of frames, the mobile station shall set PCG_OFF_TIMES to ‘0’. The mobile station shall not use power control groups as the unit of duration if $P\_REV\_IN\_USE_s$ is less than six.

+ If $ALIGN\_TIMING_r$ is equal to ‘1’, the mobile station shall set ALIGN_TIMING_USED to ‘1’ to indicate if it will align its search as requested by the base station; otherwise, the mobile station shall set ALIGN_TIMING_USED to ‘0’. If ALIGN_TIMING_USED is set to ‘1’, the mobile station shall set MAX_NUM_VISITS to the maximum number of visits per search period minus one. If MAX_NUM_VISITS is not equal to 0, the mobile station shall set INTER_VISIT_TIME, in units of frames or power control groups, to its estimate of the time between the beginning of consecutive visits to the Candidate Frequency within the same search period.

– When the message takes effect, the mobile station shall perform the following actions:

+ If any periodic search is in progress, the mobile station shall abort it (see 2.6.6.2.8.3.4 and 2.6.6.2.10.4).

+ Store the following parameters from the *Candidate Frequency Search Request Message:*

o *Candidate Frequency Search Request Message* sequence number ($CFSRM\_SEQ_s = CFSRM\_SEQ_r$)

o Periodic search flag: If $SEARCH\_TYPE_r$ is equal to ‘11’, the mobile station shall set $PERIODIC\_SEARCH_s$ to ‘1’; otherwise, the mobile station shall set $PERIODIC\_SEARCH_s$ to ‘0’.

o Search period on the Candidate Frequency ($SEARCH\_PERIOD_s = SEARCH\_PERIOD_r$)

o Candidate Frequency search mode ($SEARCH\_MODE_s = SEARCH\_MODE_r$)

o Band class for the Candidate Frequency ($CF\_CDMABAND_s = BAND\_CLASS_r$)

o CDMA Channel number for the CDMA Candidate Frequency ($CF\_CDMACH_s = CDMA\_FREQ_r$)

Candidate Frequency, TOTAL_OFF_TIME_FWD will be equal to MAX_OFF_TIME_FWD, and TOTAL_OFF_TIME_REV will be equal to MAX_OFF_TIME_REV.

- Serving Frequency total pilot E_c threshold ($SF\_TOTAL\_EC\_THRESH_s = SF\_TOTAL\_EC\_THRESH_r$)
- Serving Frequency total pilot E_c/I_0 threshold ($SF\_TOTAL\_EC\_I0\_THRESH_s = SF\_TOTAL\_EC\_I0\_THRESH_r$)
- Received power difference threshold ($DIFF\_RX\_PWR\_THRESH_s = DIFF\_RX\_PWR\_THRESH_r$)
- Candidate Frequency Total pilot E_c/I_0 threshold ($MIN\_TOTAL\_PILOT\_EC\_I0_s = MIN\_TOTAL\_PILOT\_EC\_I0_r$)
- Pilot detection threshold on the CDMA Candidate Frequency ($CF\_T\_ADD_s = CF\_T\_ADD_r$)
- Maximum time on the CDMA Target Frequency that the mobile station may wait to receive a period of ($N_{11m} \times 20$) ms with sufficient signal quality on the physical channel corresponding to $FPC\_PRI\_CHAN_s$ ($TF\_WAIT\_TIME_s = TF\_WAIT\_TIME_r$)
- Pilot PN sequence offset increment on the CDMA Candidate Frequency ($CF\_PILOT\_INC_s = CF\_PILOT\_INC_r$)
- Search window for pilots in the Neighbor Set on the CDMA Candidate Frequency ($CF\_SRCH\_WIN\_N_s = CF\_SRCH\_WIN\_N_r$)
- Search window for pilots in the Remaining Set on the CDMA Candidate Frequency ($CF\_SRCH\_WIN\_R_s = CF\_SRCH\_WIN\_R_r$)
- If PILOT_UPDATE is equal to ‘1’, the mobile station shall perform the following:
  - Set $CF\_SEARCH\_PRIORITY\_INCL_s$ and $CF\_SRCH\_WIN\_NGHBR\_INCL_s$ to the values corresponding to CF_NGHBR_SRCH_MODE shown in Table 2.6.6.2.5.1-1,
  - Set $CF\_SRCH\_OFFSET\_INCL_s$ to $CF\_SRCH\_OFFSET\_INCL_r$.
- If PILOT_UPDATE is equal to ‘1’, the mobile station shall replace the Candidate Frequency Neighbor Set with all neighbor pilots specified in the *Candidate Frequency Search Request Message*. Specifically, the mobile station shall store the following:
  - Set the NGHBR_PN field of the Candidate Frequency Neighbor Set Pilot Record to $NGHBR\_PN_r$.
  - Set the ADD_PILOT_REC_INCL field of the Candidate Frequency Neighbor Set Pilot Record to $ADD\_PILOT\_REC\_INCL_r$. If $ADD\_PILOT\_REC\_INCL_r$ is equal to ‘1’, the mobile station shall store the following:

- Set the NGHBR_PILOT_REC_TYPE field of the Candidate Frequency Neighbor Set Pilot Record to $NGHBR\_PILOT\_REC\_TYPE_r$.
- If $NGHBR\_PILOT\_REC\_TYPE_r$ equals '000', the mobile station shall set the TD_POWER_LEVEL and TD_MODE fields of the Candidate Frequency Neighbor Set Pilot Record to $TD\_POWER\_LEVEL_r$ and TD_MODE_r, respectively.
- If $NGHBR\_PILOT\_REC\_TYPE_r$ is equal to '001', the mobile station shall
  + Set the AUX_PILOT_QOF field of the Candidate Frequency Neighbor Set Pilot Record to QOF_r.
  + Set the AUX_PILOT_WALSH_CODE field of the Candidate Frequency Neighbor Set Pilot Record to $AUX\_PILOT\_WALSH_r$ with the Walsh Code length specified by $WALSH\_LENGTH_r$.
- If $NGHBR\_PILOT\_REC\_TYPE_r$ is equal to '010', the mobile station shall:
  + Set the AUX_PILOT_TD_QOF field of the Candidate Frequency Neighbor Set Pilot Record to QOF_r.
  + Set the AUX_PILOT_WALSH_CODE field of the Candidate Frequency Neighbor Set Pilot Record to AUX_WALSH_r with the Walsh Code length specified by $WALSH\_LENGTH_r$.
  + Set the AUX_TD_POWER_LEVEL field of the Candidate Frequency Neighbor Set Pilot Record to $AUX\_TD\_POWER\_LEVEL_r$.
  + Set the TD_MODE field of the Candidate Frequency Neighbor Set Pilot Record to TD_MODE_r.
- If $NGHBR\_PILOT\_REC\_TYPE_r$ is equal to '011', the mobile station shall:
  + Set the SR3_PRIMARY_PILOT field of Candidate Frequency Neighbor Set Pilot Record to $SR3\_PRIMARY\_PILOT_r$.
  + Set the SR3_PILOT_POWER1 field of Candidate Frequency Neighbor Set Pilot Record to $SR3\_PILOT\_POWER1_r$.
  + Set the SR3_PILOT_POWER2 field of Candidate Frequency Neighbor Set Pilot Record to $SR3\_PILOT\_POWER2_r$.
- If $NGHBR\_PILOT\_REC\_TYPE_r$ is equal to '100', the mobile station shall:

+ Set the SR3_PRIMARY_PILOT field of Candidate Frequency Neighbor Set Pilot Record to $SR3\_PRIMARY\_PILOT_r$.

+ Set the SR3_PILOT_POWER1 field of Candidate Frequency Neighbor Set Pilot Record to $SR3\_PILOT\_POWER1_r$.

+ Set the SR3_PILOT_POWER2 field of Candidate Frequency Neighbor Set Pilot Record to $SR3\_PILOT\_POWER2_r$.

+ Set the AUX_PILOT_QOF field of Candidate Frequency Neighbor Set Pilot Record to QOF_r.

+ Set the AUX_PILOT_WALSH_CODE field of Candidate Frequency Neighbor Set Pilot Record to $AUX\_PILOT\_WALSH_r$ with the Walsh Code length specified by $WALSH\_LENGTH_r$.

+ If $ADD\_INFO\_INCL1_r$ is equal to '1', set the AUX_PILOT_QOF1 field of Candidate Frequency Neighbor Set Pilot Record to $QOF1_r$ and set the AUX_PILOT_WALSH_CODE1 field of Candidate Frequency Neighbor Set Pilot Record to $AUX\_PILOT\_WALSH1_r$ with the Walsh Code length specified by $WALSH\_LENGTH1_r$; otherwise, set the AUX_PILOT_QOF1 field of Candidate Frequency Neighbor Set Pilot Record to QOF_r and set the AUX_PILOT_WALSH_CODE1 field of Candidate Frequency Neighbor Set Pilot Record to $AUX\_PILOT\_WALSH_r$ with the Walsh Code length specified by $WALSH\_LENGTH_r$.

+ If $ADD\_INFO\_INCL2_r$ is equal to '1', set the AUX_PILOT_QOF2 field of Candidate Frequency Neighbor Set Pilot Record to $QOF2_r$ and set the AUX_PILOT_WALSH_CODE2 field of Candidate Frequency Neighbor Set Pilot Record to $AUX\_PILOT\_WALSH2_r$ with the Walsh Code length specified by $WALSH\_LENGTH2_r$; otherwise, set the AUX_PILOT_QOF2 field of Candidate Frequency Neighbor Set Pilot Record to QOF_r and set the AUX_PILOT_WALSH_CODE2 field of Candidate Frequency Neighbor Set Pilot Record to $AUX\_PILOT\_WALSH_r$ with the Walsh Code length specified by $WALSH\_LENGTH_r$.

- If PILOT_UPDATE is equal to '1' and $CF\_SEARCH\_PRIORITY\_INCL_s$ is equal to '1', the mobile station shall store the search priority ($SEARCH\_PRIORITY_s = SEARCH\_PRIORITY_r$) associated with each of the neighboring base stations contained in the Candidate Frequency Neighbor Set.

- If PILOT_UPDATE is equal to '1' and $CF\_SRCH\_WIN\_NGHBR\_INCL_s$ is equal to '1', the mobile station shall perform the following:

◊ Store the neighbor pilot channel search window size ($SRCH\_WIN\_NGHBR_s$ = $SRCH\_WIN\_NGHBR_r$) associated with each of the neighboring base stations contained in the Candidate Frequency Neighbor Set,

◊ If $CF\_SRCH\_OFFSET\_INCL_r$ equals '1', store the neighbor pilot channel search window offset ($SRCH\_OFFSET\_NGHBR_s$ = $SRCH\_OFFSET\_NGHBR_r$) associated with each of the neighboring base stations contained in the Candidate Frequency Neighbor Set.

o If PILOT_UPDATE is equal to '1', the mobile station shall replace the Candidate Frequency Search Set with all flagged pilots (those with the corresponding SEARCH_SET field set to '1') specified in the *Candidate Frequency Search Request Message*.

+ If $ALIGN\_TIMING_r$ is equal to '1' and the mobile station will align its search as requested by the base station, the mobile station shall set $ALIGN\_TIMING\_USED_s$ to '1' and $SEARCH\_OFFSET_s$ to $SEARCH\_OFFSET_r$; otherwise, the mobile station shall set $ALIGN\_TIMING\_USED_s$ to '0' and $SEARCH\_OFFSET_s$ to '000000'.

+ If the mobile station sets the PCG_OFF_TIMES field of the *Candidate Frequency Search Response Message* to '1', it shall set $SEARCH\_TIME\_RESOLUTION_s$ to 0.00125; otherwise, it shall set $SEARCH\_TIME\_RESOLUTION_s$ to 0.02.

+ If $SEARCH\_TYPE_r$ is equal to '01', the mobile station shall perform a single search of the Candidate Frequency Search Set, as described in 2.6.6.2.8.3.1. If $SEARCH\_TYPE_r$ is equal to '11', the mobile station shall perform the periodic search procedures, as described in 2.6.6.2.8.3.2.

Table 2.6.6.2.5.1-1. Search Parameter Settings

NGHBR_SRCH_ -MODE CF_NGHBR_-SRCH_MODE	SEARCH_-PRIORITY_INCL CF_SEARCH_-PRIORITY_INCL	SRCH_WIN_-NGHBR_INCL CF_SRCH_-WIN_NGHBR_INCL
00	0	0
01	1	0
10	0	1
11	1	1

6. *Candidate Frequency Search Control Message:* The mobile station shall process the message as follows:

If $SEARCH\_MODE_s$ is equal to '0000':

- The mobile station shall send a *Mobile Station Reject Order* with the ORDQ field set to '00001010' (search set not specified), if $SEARCH\_TYPE_r$ is not equal to '00' and the Candidate Frequency Search Set is empty.
- The mobile station shall send a *Mobile Station Reject Order* with the ORDQ field set to '00001011' (invalid search request), if $SEARCH\_TYPE_r$ is not equal to '00' and the Candidate Frequency is the same as the Serving Frequency ($CF\_CDMABAND_s$ is equal to $CDMABAND_s$ and CF_CDMACH_s is equal to $CDMACH_s$).
- The mobile station shall send a *Mobile Station Reject Order* with the ORDQ field set to '00001101' (search period too short), if $SEARCH\_TYPE_r$ is equal to '11' and *search_period* is less than (max (*fwd_time*, *rev_time*) + T_{71m}) seconds, where

  search_period = time period corresponding to $SEARCH\_PERIOD_r$ shown in Table 2.6.6.2.8.3.2-1,

  fwd_time = the mobile station's estimate of the total length of time, in seconds, for which the mobile station will need to suspend its current Forward Traffic Channel processing in order to tune to the Candidate Frequency, to search the Candidate Frequency Search Set and to re-tune to the Serving Frequency; if the mobile station searches the Candidate Frequency Search Set in multiple visits, *fwd_time* is the total time for all visits to the Candidate Frequency in a search period (see 2.6.6.2.8.3.2),

  and

  rev_time = the mobile station's estimate of the total length of time, in seconds, for which the mobile station will need to suspend its current Reverse Traffic Channel processing in order to tune to the Candidate Frequency, to search the Candidate Frequency Search Set and to re-tune to the Serving Frequency; if the mobile station searches the Candidate Frequency Search Set in multiple visits, *rev_time* is the total time for all visits to the Candidate Frequency in a search period.
- If the mobile station does not reject the *Candidate Frequency Search Control Message*, it shall perform the following actions when the message takes effect:
  - If any periodic search is in progress, the mobile station shall abort it (see 2.6.6.2.8.3.4 and 2.6.6.2.10.4).
  - If $ALIGN\_TIMING_r$ is equal to '1' and the mobile station will align its search as requested by the base station, the mobile station shall set $ALIGN\_TIMING\_USED_s$ to '1'; otherwise, the mobile station shall set $ALIGN\_TIMING\_USED_s$ to '0' and $SEARCH\_OFFSET_s$ to '000000'.
  - If $SEARCH\_TYPE_r$ is equal to '00', the mobile station shall set $PERIODIC\_SEARCH_s$ to '0'.

- If $SEARCH\_TYPE_r$ is equal to '01':
  - The mobile station shall set $PERIODIC\_SEARCH_s$ to '0'.
  - The mobile station shall perform a single search of the Candidate Frequency Search Set, as described in 2.6.6.2.8.3.1.
- If $SEARCH\_TYPE_r$ is equal to '11':
  - The mobile station shall set $PERIODIC\_SEARCH_s$ to '1'.
  - The mobile station shall perform the periodic search procedures for the Candidate Frequency Search Set, as described in 2.6.6.2.8.3.2.

7. *Extended Neighbor List Update Message:* The mobile station shall update its neighbor set as specified in 2.6.6.2.6.3 and perform the following:
   - If $NGHBR\_SRCH\_MODE_r$ is equal to '01' or '11', the mobile station shall store the search priority ($SEARCH\_PRIORITY_s$ = $SEARCH\_PRIORITY_r$) associated with each of the neighboring base stations contained in the *Extended Neighbor List Update Message* which are in the mobile's neighbor set.
   - If $NGHBR\_SRCH\_MODE_r$ is equal to '01' or '00', the mobile station shall set the $SRCH\_OFFSET\_INCL_s$ field '0'.
   - If $NGHBR\_SRCH\_MODE_r$ is equal to '10' or '11', the mobile station shall perform the following:
     - Store the neighbor pilot channel search window size ($SRCH\_WIN\_NGHBR_s$ = $SRCH\_WIN\_NGHBR_r$) associated with each of the neighboring base stations contained in the *Extended Neighbor List Updated Message* which are in the mobile's neighbor set,
     - If $SRCH\_OFFSET\_INCL_r$ equals '1', set the SRCH_OFFSET_NGHBR field of NGHBR_REC[i] to the ith occurrence of $SRCH\_OFFSET\_NGHBR_r$,
     - Set $SRCH\_OFFSET\_INCL_s$ to $SRCH\_OFFSET\_INCL_r$.
   - The mobile station shall update the default search window size for its Neighbor Set ($SRCH\_WIN\_N_s$ = $SRCH\_WIN\_N_r$).
   - The mobile station shall set $SEARCH\_PRIORITY\_INCL_s$ and $SRCH\_WIN\_NGHBR\_INCL_s$ to the value specified in Table 2.6.6.2.5.1-1 corresponding to $NGHBR\_SRCH\_MODE_r$.
   - If USE_TIMING is equal to '1', the mobile station shall store the timing included flag (TIMING_INCL) associated with each of the neighboring base stations contained in the *Extended Neighbor List Update Message* which are in the mobile station neighbor set; otherwise the mobile station shall set the timing included flag (TIMING_INCL) associated with each of the neighboring base stations to '0'.

- If USE_TIMING is equal to '1' and $TIMING\_INCL_r$ is equal to '1', the mobile station shall store the neighbor transmit time offset (NGHBR_TX_OFFSET = $NGHBR\_TX\_OFFSET_r$) associated with each of the neighboring base stations contained in the *Extended Neighbor List Update Message* which are in the mobile station neighbor set.
- If USE_TIMING is equal to '1' and the TIMING_INCL is equal to '1', then the mobile station shall perform the following:
  - If the GLOBAL_TIMING_INCL field is equal to '1', then the mobile station shall store the neighbor transmit time duration (NGHBR_TX_DURATION = $GLOBAL\_TX\_DURATION_r$) and the neighbor transmit time duration (NGHBR_TX_PERIOD = $GLOBAL\_TX\_PERIOD_r$) contained in the *Extended Neighbor List Update Message*.
  - If the GLOBAL_TIMING_INCL field is equal to '0', then the mobile station shall store the neighbor transmit time duration (NGHBR_TX_DURATION = $NGHBR\_TX\_DURATION_r$) and the neighbor transmit time duration (NGHBR_TX_PERIOD = $NGHBR\_TX\_PERIOD_r$) associated with each of the neighboring base stations contained in the *Extended Neighbor List Update Message* which are in the mobile station neighbor set.
- The mobile station shall set $RESQ\_ENABLED_s$ = $RESQ\_ENABLED_r$. If $RESQ\_ENABLED_s$ is equal to '1', then the mobile station shall store:
  - Call rescue delay timer value ($RESQ\_DELAY\_TIME_s$ = $RESQ\_DELAY\_TIME_r$)
  - Call rescue allowed timer value ($RESQ\_ALLOWED\_TIME_s$ = $RESQ\_ALLOWED\_TIME_r$)
  - Call rescue attempt timer value ($RESQ\_ATTEMPT\_TIME_s$ = $RESQ\_ATTEMPT\_TIME_r$)
  - Code channel index for call rescue ($RESQ\_CODE\_CHAN_s$ = $RESQ\_CODE\_CHAN_r$)
  - Quasi-Orthogonal Function mask identifier for call rescue ($RESQ\_QOF_s$ = $RESQ\_QOF_r$)
  - Minimum time between consecutive rescues ($RESQ\_MIN\_PERIOD_s$ = $RESQ\_MIN\_PERIOD_r$ + 1) if $RESQ\_MIN\_PERIOD\_INCL_r$ is equal to '1'; otherwise, $RESQ\_MIN\_PERIOD_s$ = '00000'.
  - The required number of transmissions of a regular PDU before declaring L2 Acknowledgment Failure when Call Rescue is enabled ($RESQ\_NUM\_TOT\_TRANS\_20MS_s$ = $RESQ\_NUM\_TOT\_TRANS\_20MS_r$) if included.
  - The required number of transmissions of a mini PDU before declaring L2 Acknowledgment Failure when Call Rescue is enabled ($RESQ\_NUM\_TOT\_TRANS\_5MS_s$ = $RESQ\_NUM\_TOT\_TRANS\_5MS_r$) if included.

- The mobile station shall set the Traffic Channel preamble length for Call Rescue Soft Handoff as follows:
  - If the mobile station is operating in Radio Configuration 1 or 2, set $RESQ\_NUM\_PREAMBLE\_RC1\_RC2_s = RESQ\_NUM\_PREAMBLE_r$;
  - If the mobile station is operating in Radio Configuration greater 2, set $RESQ\_NUM\_PREAMBLE_s = RESQ\_NUM\_PREAMBLE_r$.
- The power level adjustment to be applied to the last closed-loop power level when re-enabling the transmitter for call rescue soft handoff ($RESQ\_POWER\_DELTA_s = RESQ\_POWER\_DELTA_r$).
- Set the NGHBR_RESQ_CONFIGURED field of NGHBR_REC[i] to the ith occurrence of $NGHBR\_RESQ\_CONFIGURED_r$.

- For each of the neighboring base stations contained in the *General Neighbor List Message*, the mobile station shall set ADD_PILOT_REC_INCL field of NGHBR_REC[i] to the ith occurrence of $ADD\_PILOT\_REC\_INCL_r$. If $ADD\_PILOT\_REC\_INCL_r$ equals '1', for each pilot, the mobile station shall also perform the following:
  - Set the NGHBR_PILOT_REC_TYPE field of NGHBR_PILOT_REC to $NGHBR\_PILOT\_REC\_TYPE_r$.
  - If $NGHBR\_PILOT\_REC\_TYPE_r$ is equal to '000'. The mobile station shall set the TD_POWER_LEVEL field of NGHBR_PILOT_REC to $TD\_POWER\_LEVEL_r$ and set the TD_MODE field of NGHBR_PILOT_REC to TD_MODE_r.
  - If $NGHBR\_PILOT\_REC\_TYPE_r$ is equal to '001', the mobile station shall:
    - Set the AUX_PILOT_QOF field of NGHBR_PILOT_REC to QOF_r
    - Set the AUX_PILOT_WALSH_CODE field of NGHBR_PILOT_REC to $AUX\_PILOT\_WALSH_r$ with the Walsh Code length specified by $WALSH\_LENGTH_r$
  - If $NGHBR\_PILOT\_REC\_TYPE_r$ is equal to '010', the mobile station shall:
    - Set the AUX_PILOT_TD_QOF field of NGHBR_PILOT_REC to QOF_r.
    - Set the AUX_PILOT_WALSH_CODE field of NGHBR_PILOT_REC to AUX_WALSH_r with the Walsh Code length specified by $WALSH\_LENGTH_r$.
    - Set the AUX_TD_POWER_LEVEL field of NGHBR_PILOT_REC to $AUX\_TD\_POWER\_LEVEL_r$.
    - Set the TD_MODE field of NGHBR_PILOT_REC to TD_MODE_r.
  - If $NGHBR\_PILOT\_REC\_TYPE_r$ is equal to '011', the mobile station shall:
    - Set the SR3_PRIMARY_PILOT field of NGHBR_PILOT_REC to $SR3\_PRIMARY\_PILOT_r$.

+ Set the SR3_PILOT_POWER1 field of NGHBR_PILOT_REC to $SR3\_PILOT\_POWER1_r$.

+ Set the SR3_PILOT_POWER2 field of NGHBR_PILOT_REC to $SR3\_PILOT\_POWER2_r$.

– If $NGHBR\_PILOT\_REC\_TYPE_r$ is equal to '100', the mobile station shall:

+ Set the SR3_PRIMARY_PILOT field of NGHBR_PILOT_REC to $SR3\_PRIMARY\_PILOT_r$.

+ Set the SR3_PILOT_POWER1 field of NGHBR_PILOT_REC to $SR3\_PILOT\_POWER1_r$.

+ Set the SR3_PILOT_POWER2 field of NGHBR_PILOT_REC to $SR3\_PILOT\_POWER2_r$.

+ Set the AUX_PILOT_QOF field of NGHBR_PILOT_REC to QOF_r.

+ Set the AUX_PILOT_WALSH_CODE field of NGHBR_PILOT_REC to $AUX\_PILOT\_WALSH_r$ with the Walsh Code length specified by $WALSH\_LENGTH_r$.

+ If $ADD\_INFO\_INCL1_r$ is equal to '1', set the AUX_PILOT_QOF1 field of NGHBR_PILOT_REC to $QOF1_r$ and set the AUX_PILOT_WALSH_CODE1 field of NGHBR_PILOT_REC to $AUX\_PILOT\_WALSH1_r$ with the Walsh Code length specified by $WALSH\_LENGTH1_r$; otherwise, set the AUX_PILOT_QOF1 field of NGHBR_PILOT_REC to QOF_r and set the AUX_PILOT_WALSH_CODE1 field of NGHBR_PILOT_REC to $AUX\_PILOT\_WALSH_r$ with the Walsh Code length specified by $WALSH\_LENGTH_r$.

+ If $ADD\_INFO\_INCL2_r$ is equal to '1', set the AUX_PILOT_QOF2 field of NGHBR_PILOT_REC to $QOF2_r$ and set the AUX_PILOT_WALSH_CODE2 field of NGHBR_PILOT_REC to $AUX\_PILOT\_WALSH2_r$ with the Walsh Code length specified by $WALSH\_LENGTH2_r$; otherwise, set the AUX_PILOT_QOF2 field of NGHBR_PILOT_REC to QOF_r and set the AUX_PILOT_WALSH_CODE2 field of NGHBR_PILOT_REC to $AUX\_PILOT\_WALSH_r$ with the Walsh Code length specified by $WALSH\_LENGTH_r$.

8. *Supplemental Channel Assignment Message:* The mobile station shall process this message as follows:

The mobile station shall send a *Mobile Station Reject Order* with the ORDQ field set to the specified value if any of the following conditions is true, and shall not perform any other action described in this section for processing the *Supplemental Channel Assignment Message:*

- The mobile station shall send a *Mobile Station Reject Order* with the ORDQ field set to '00000110' (capability not supported), if the number of forward or reverse Supplemental Code Channels specified in the *Supplemental Channel Assignment Message* is greater than the maximum number of Supplemental Code Channels supported by the mobile station.
- The mobile station shall send a *Mobile Station Reject Order* with the ORDQ field set to '00000011' (message structure not acceptable), if both USE_REV_HDM_SEQ and EXPL_REV_START_TIME or both USE_FOR_HDM_SEQ and EXPL_FOR_START_TIME specified in the *Supplemental Channel Assignment Message* are set to '1'.
- The mobile station shall send a *Mobile Station Reject Order* with the ORDQ field set to '00000100' (message field not in valid range), if PILOT_PN specified in the *Supplemental Channel Assignment Message* is not in the Active Set and this message is not linked with a *General Handoff Direction Message*.

If none of the above conditions is true, the mobile station shall perform the following.

- The mobile station shall store the following parameters from the *Supplemental Channel Assignment Message*:
  - Use *General Handoff Direction Message* forward sequence number indicator ($USE\_FOR\_HDM\_SEQ_s$ = $USE\_FOR\_HDM\_SEQ_r$)
  - If $USE\_FOR\_HDM\_SEQ_r$ is equal to '1', then the mobile station shall store the following:
    - The sequence number of the *General Handoff Direction Message* to which this messaged is linked for the Forward Supplemental Code Channel assignment ($FOR\_LINKED\_HDM\_SEQ_s$ = $FOR\_LINKED\_HDM\_SEQ_r$)
    - The forward Supplemental Code Channel assignment order ($SCAM\_FOR\_ORDER_s$ = least significant bit of $FOR\_SUP\_CONFIG_r$)
    - The forward duration assignment indicator ($SCAM\_FOR\_DURATION\_MODE_s$ = $USE\_FOR\_DURATION_r$).
  - Use *General Handoff Direction Message* reverse sequence number indicator ($USE\_REV\_HDM\_SEQ_s$ = $USE\_REV\_HDM\_SEQ_r$)
  - If $USE\_REV\_HDM\_SEQ_r$ is equal to '1', then the mobile station shall store the following:
    - The sequence number of the *General Handoff Direction Message* to which this messaged is linked for the Reverse Supplemental Code Channel assignment ($REV\_LINKED\_HDM\_SEQ_s$ = $REV\_LINKED\_HDM\_SEQ_r$)
    - The reverse duration assignment indicator ($SCAM\_REV\_DURATION\_MODE_s$ = $USE\_REV\_DURATION_r$).

- If $USE\_RETRY\_DELAY_r$ is '0', then the mobile station shall store 0 as $RETRY\_DELAY_s$. The mobile station may send subsequent *Supplemental Channel Request Messages* whenever $RETRY\_DELAY_s$ is set to 0.
- If $USE\_RETRY\_DELAY_r$ is set to '1', the mobile station shall interpret the *Supplemental Channel Assignment Message* as an indication that the base station has specified a *Supplemental Channel Request Message* retry delay in $RETRY\_DELAY_r$ as follows:
  - The mobile station shall store the next system time 80 ms boundary + $RETRY\_DELAY_r \times 320$ ms as $RETRY\_DELAY_s$. The mobile station shall not send any subsequent *Supplemental Channel Request Message* until after the system time stored in $RETRY\_DELAY_s$. At the system time stored in $RETRY\_DELAY_s$, the mobile station shall reset $RETRY\_DELAY_s$ to 0.
  - If $RETRY\_DELAY_r$ is '00000000', then the mobile station shall store 0 as $RETRY\_DELAY_s$. The mobile station may send subsequent *Supplemental Channel Request Messages* whenever $RETRY\_DELAY_s$ is set to 0.
  - If $RETRY\_DELAY_r$ is '11111111', then the mobile station shall store *infinity* as $RETRY\_DELAY_s$, and the mobile station shall not send any further *Supplemental Channel Request Messages* until the mobile station receives a new *Supplemental Channel Assignment Message* with no retry delay or a non-infinite retry delay specified, or until the mobile station receives a *General Handoff Direction Message* with a CLEAR_RETRY_DELAY indication set.
- If $REV\_INCLUDED_r$ is equal to '1', then the mobile station shall process Reverse Supplemental Code Channel assignment information for the *Supplemental Channel Assignment Message*. This information shall be processed as follows:
  - The mobile station shall store $USE\_T\_ADD\_ABORT_r$, the Reverse Supplemental Code Channel assignment T_ADD abort indicator, as $USE\_T\_ADD\_ABORT_s$.
  - The mobile station shall store $REV\_DTX\_DURATION_r$, Reverse Supplemental Channel Discontinuous Transmission Duration, as $REV\_DTX\_DURATION_s$.
  - If $REV\_PARMS\_INCLUDED_r$ is equal to '1', the mobile station shall store the following:
    - $T\_MULCHAN_s = T\_MULCHAN_r$
    - $BEGIN\_PREAMBLE_s = BEGIN\_PREAMBLE_r$
    - $RESUME\_PREAMBLE_s = RESUME\_PREAMBLE_r$
  - If $IGNORE\_SCAM_s$ is equal to '1' and $SCRM\_SEQ\_NUM_r$ is not present or is present and is not equal to $SCRM\_SEQ\_NUM_s$, then the mobile station shall not process the remaining Reverse Supplemental Code Channel assignment information in this message.

- If $IGNORE\_SCAM_S$ is equal to '1' and $SCRM\_SEQ\_NUM_r$ is present and is equal to $SCRM\_SEQ\_NUM_S$, then the mobile station shall set $IGNORE\_SCAM_S$ to '0'.
- The mobile station shall set $REV\_START\_TIME_S$ as follows:
  - If $EXPL\_REV\_START\_TIME_r$ is equal to '1', the mobile station shall set the $REV\_START\_TIME_S$ to $REV\_START\_TIME_r$.
  - If $USE\_REV\_HDM\_SEQ_r$ is equal to '1' and $REV\_LINKED\_HDM\_SEQ_r$ is not equal to HDM_SEQ_S, the mobile station shall set the $REV\_START\_TIME_S$ to NULL.
  - If $USE\_REV\_HDM\_SEQ_r$ is equal to '1' and $REV\_LINKED\_HDM\_SEQ_r$ is equal to HDM_SEQ_S, then the mobile station shall set the $REV\_START\_TIME_S$ to the action time of the *General Handoff Direction Message* that is linked to the *Supplemental Channel Assignment Message*.
  - If $EXPL\_REV\_START\_TIME_r$ is equal to '0' and $USE\_REV\_HDM\_SEQ_r$ is equal to '0', the mobile station shall set the $REV\_START\_TIME_S$ to the next 80 ms boundary following the action time of the *Supplemental Channel Assignment Message*.

- The mobile station shall set $NUM\_REV\_CODES_S$ to $NUM\_REV\_CODES_r$. If $REV\_START\_TIME_S$ is not equal to NULL, the mobile station shall perform the following actions:
  - If $NUM\_REV\_CODES_r$ is equal to '000', the mobile station shall stop transmitting the Reverse Supplemental Code Channels at the start time specified by $REV\_START\_TIME_S$.
  - If $NUM\_REV\_CODES_r$ is not equal to '000', the mobile station shall set PILOT_GATING_USE_RATE to '0' at the action time of the message and the mobile station may start transmitting on $NUM\_REV\_CODES_S$ Reverse Supplemental Code Channels at the start time specified by $REV\_START\_TIME_S$ for a duration of time specified by the following rules:
    - If $USE\_REV\_DURATION_r$ is equal to '1', the mobile station shall set $REV\_DURATION_S$ to $REV\_DURATION_r$. The mobile station may continue transmitting on the Reverse Supplemental Code Channels for a period of ($REV\_DURATION_S \times 80$) ms, or until it receives the action time of a subsequent *General Handoff Direction Message* or a *Supplemental Channel Assignment Message* that specifies a different Reverse Supplemental assignment duration or start time.

- If $USE\_REV\_DURATION_r$ is equal to '0', the mobile station may continue to transmit indefinitely on the Reverse Supplemental Code Channels, or until it receives the action time of a subsequent *General Handoff Direction Message* or a *Supplemental Channel Assignment Message* that specifies a different Reverse Supplemental assignment duration or start time.

- If FOR_INCLUDED is equal to '1', then the mobile station shall process Forward Supplemental Code Channel assignment information as follows:
  - The mobile station shall assign a value to $FOR\_START\_TIME_s$ according to the following rules:
    - If EXPL_FOR_START_TIME is equal to '1', the mobile station shall set the $FOR\_START\_TIME_s$ to $FOR\_START\_TIME_r$.
    - If $USE\_FOR\_HDM\_SEQ_r$ is equal to '1' and $FOR\_LINKED\_HDM\_SEQ_r$ is not equal to HDM_SEQ_s, the mobile station shall set the $FOR\_START\_TIME_s$ to NULL.
    - If $USE\_FOR\_HDM\_SEQ_r$ is equal to '1' and $FOR\_LINKED\_HDM\_SEQ_r$ is equal to HDM_SEQ_s, then the mobile station shall set the $FOR\_START\_TIME_s$ to the action time of the *General Handoff Direction Message* that is linked to the *Supplemental Channel Assignment Message*.
    - If $EXPL\_FOR\_START\_TIME_r$ is equal to '0' and $USE\_FOR\_HDM\_SEQ_r$ equals '0', the mobile station shall set the $FOR\_START\_TIME_s$ to the action time of the *Supplemental Channel Assignment Message*.
  - If $FOR\_SUP\_CONFIG_r$ is equal to '00' and $FOR\_START\_TIME_s$ is not equal to NULL, the mobile station should stop processing the Forward Supplemental Code Channels at the time specified by $FOR\_START\_TIME_s$.
  - If $FOR\_SUP\_CONFIG_r$ is equal to '01' and $FOR\_START\_TIME_s$ is not equal to NULL, the mobile station shall set PILOT_GATING_USE_RATE to '0' at the action time of the message and start processing the Forward Supplemental Code Channels in the $CODE\_CHAN\_LIST_s$ at $FOR\_START\_TIME_s$ for a period of time specified by the following rules:
    - If USE_FOR_DURATION is equal to '1', the mobile station shall set $FOR\_DURATION_s$ to $FOR\_DURATION_r$. The mobile station shall continue processing the Forward Supplemental Code Channels for a period of ($FOR\_DURATION_s \times 80$) ms, or until it receives the action time of a subsequent *Supplemental Channel Assignment Message* or a *General Handoff Direction Message* that specifies a different Forward Supplemental assignment duration or start time.

+ If $USE\_FOR\_DURATION_r$ is equal to '0', the mobile station shall continue processing the Forward Supplemental Code Channels until it receives the action time of a subsequent *Supplemental Channel Assignment Message* or a *General Handoff Direction Message* that specifies a different Forward Supplemental assignment duration or start time.

– If $FOR\_SUP\_CONFIG_r$ is equal to '10', the mobile station shall perform the following:

+ The mobile station shall update the $CODE\_CHAN\_LIST_s$ as specified in 2.6.8.

+ If $FOR\_START\_TIME_s$ is not equal to NULL the mobile station should stop processing Forward Supplemental Code Channels at the time specified by $FOR\_START\_TIME_s$.

– If $FOR\_SUP\_CONFIG_r$ is equal to '11', the mobile station shall perform the following:

+ The mobile station shall update the $CODE\_CHAN\_LIST_s$ as specified in 2.6.8.

+ If $FOR\_START\_TIME_s$ is not equal to NULL, then the mobile station shall set PILOT_GATING_USE_RATE to '0' at the action time of the message and start processing the Forward Supplemental Code Channels in the $CODE\_CHAN\_LIST_s$ at the time specified by $FOR\_START\_TIME_s$ for a period of time specified by the following rules:

o If $USE\_FOR\_DURATION_r$ is equal to '1', the mobile station shall set $FOR\_DURATION_s$ to $FOR\_DURATION_r$. The mobile station shall continue processing the Forward Supplemental Code Channels for ($FOR\_DURATION_s \times 80$) ms, until it receives a subsequent *Supplemental Channel Assignment Message* or a *General Handoff Direction Message* that specifies a different Forward Supplemental assignment duration or start time.

o If $USE\_FOR\_DURATION_r$ is equal to '0', the mobile station shall continue processing the Forward Supplemental Code Channels until it receives a subsequent *Supplemental Channel Assignment Message* or a *General Handoff Direction Message* that specifies a different Forward Supplemental assignment duration or start time.

9. *General Handoff Direction Message:* The mobile station shall process the message as follows:

In addition to the requirements in this section, if the SCR_INCLUDED field is included in this message and is set to '1' the mobile station shall also process this message in accordance with the requirements for the active service subfunction (see 2.6.4.1.2.2).

The mobile station shall send a *Mobile Station Reject Order* with the ORDQ field set to the specified value if any of the following conditions is true, and shall not perform any other action described in this section for processing the *General Handoff Direction Message:*

- The mobile station shall send a *Mobile Station Reject Order* with the ORDQ field set to '00000110' (capability not supported), if the mobile station does not support the band class specified in the *General Handoff Direction Message*.
- The mobile station shall send a *Mobile Station Reject Order* with the ORDQ field set to '00000110' (capability not supported), if the number of forward or reverse Supplemental Code Channels specified in the *General Handoff Direction Message* is greater than the maximum number of Supplemental Code Channels supported by the mobile station.
- If the SCR_INCLUDED field is included in this message and is set to '1', the mobile station shall perform the following:
  - The mobile station shall send a *Mobile Station Reject Order* with the ORDQ field set to '00000111' (message cannot be handled by the current mobile station configuration), if the mobile station does not support the service configuration specified in the *General Handoff Direction Message*.
  - The mobile station shall send a *Mobile Station Reject Order* (ORDQ = '00000111') within T_{56m} seconds, if the mobile station supports the service configuration specified but does not accept the service configuration specified in the *General Handoff Direction Message*.
- The mobile station shall send a *Mobile Station Reject Order* with the ORDQ field set to '00000111' (message cannot be handled by the current mobile station configuration), if the NNSCR_INCLUDED field is included and set to '1' and the SCR_INCLUDED field is either not included or included but set to '0', and the mobile station does not support the configuration specified in the non-negotiable service configuration information record in the *General Handoff Direction Message*.
- The mobile station shall send a *Mobile Station Reject Order* with the ORDQ field set to '00001010' (search set not specified), if the PERIODIC_SEARCH field is included in the *General Handoff Direction Message* and is set to '1', and the Candidate Frequency Search Set is empty.
- The mobile station shall send a Mobile *Station Reject Order* with the ORDQ field set to '00001101' (search period too short), if the PERIODIC_SEARCH field is included in the *General Handoff Direction Message* and is set to '1', and *search_period* is less than (max *(fwd_time*, *rev_time)* + T_{71m} seconds), where

  search_period = time period corresponding to $SEARCH\_PERIOD_S$ shown in Table 2.6.6.2.8.3.2-1,

fwd_time = the mobile station's estimate of the total length of time, in seconds, for which the mobile station will need to suspend its current Forward Traffic Channel processing in order to tune to the CDMA Candidate Frequency, to search the Candidate Frequency Search Set, and to re-tune to the Serving Frequency; if the mobile station searches the Candidate Frequency Search Set in multiple visits, *fwd_time* is the total time for all visits to the CDMA Candidate Frequency in a search period (see 2.6.6.2.8.3.2),

and

rev_time = the mobile station's estimate of the total length of time, in seconds, for which the mobile station will need to suspend its current Reverse Traffic Channel processing in order to tune to the CDMA Candidate Frequency, to search the Candidate Frequency Search Set, and to re-tune to the Serving Frequency; if the mobile station searches the Candidate Frequency Search Set in multiple visits, *rev_time* is the total time for all visits to the CDMA Candidate Frequency in a search period.

If none of the above conditions is true, the mobile station shall perform the actions described in the remainder of this section to process the *General Handoff Direction Message* at the action time of the message.

If EXTRA_PARMS is equal to '1', the mobile station shall store the return on failure indicator from the *General Handoff Direction Message* ($RETURN\_IF\_HANDOFF\_FAIL_s = RETURN\_IF\_HANDOFF\_FAIL_r$); otherwise the mobile station shall set $RETURN\_IF\_HANDOFF\_FAIL_s$ to '0'.

The mobile station shall set $RETURN\_IF\_HANDOFF\_FAIL_s$ to '0' (disable return on failure) if any of the following conditions is true:

- If $P\_REV\_IN\_USE_s$ is less than or equal to four and the mobile station does not support hard handoff with return on failure, or
- At least one of the pilots specified by the message is also included in the Active Set prior to the action time of the message, and one of the following conditions is true:
  - EXTRA_PARMS is equal to '0', or
  - EXTRA_PARMS is equal to '1', the message specifies the same Frequency Assignment as the Serving Frequency ($BAND\_CLASS_r$ is equal to $CDMABAND_s$ and $CDMA\_FREQ_r$ is equal to $CDMACH_s$), and $FRAME\_OFFSET_r$ is equal to $FRAME\_OFFSET_s$.

The mobile station shall store the following parameters from its current configuration:

- CDMA band class ($SF\_CDMABAND_s = CDMABAND_s$)
- Frequency assignment ($SF\_CDMACH_s = CDMACH_s$)

- Frame Offset ($SF\_FRAME\_OFFSET_S$ = $FRAME\_OFFSET_S$)

If $RETURN\_IF\_HANDOFF\_FAIL_S$ is equal to '1', the mobile station shall also store the following parameters from its current configuration:

- Protocol revision level
  ($SF\_P\_REV_S$ = P_REV_S)
- Protocol revision level in use on the Serving Frequency
  ($SF\_P\_REV\_IN\_USE_S$ = $P\_REV\_IN\_USE_S$)
- Search window size for the Active Set and Candidate Set
  ($SF\_SRCH\_WIN\_A_S$ = $SRCH\_WIN\_A_S$)
- Search window size for the Neighbor Set
  ($SF\_SRCH\_WIN\_N_S$ = $SRCH\_WIN\_N_S$)
- Search window size for the Remainder Set
  ($SF\_SRCH\_WIN\_R_S$ = $SRCH\_WIN\_R_S$)
- Pilot detection threshold
  ($SF\_T\_ADD_S$ = T_ADD_S)
- Pilot drop threshold
  ($SF\_T\_DROP_S$ = T_DROP_S)
- Active Set versus Candidate Set comparison threshold
  ($SF\_T\_COMP_S$ = T_COMP_S)
- Drop timer value
  ($SF\_T\_TDROP_S$ = T_TDROP_S)
- Drop timer range value ($SF\_T\_TDROP\_RANGE_S$ = $T\_TDROP\_RANGE_S$)
- Soft slope for the dynamic add and drop thresholds
  ($SF\_SOFT\_SLOPE_S$ = $SOFT\_SLOPE_S$)
- Intercept for the dynamic add threshold
  ($SF\_ADD\_INTERCEPT_S$ = $ADD\_INTERCEPT_S$)
- Intercept for the dynamic drop threshold
  ($SF\_DROP\_INTERCEPT_S$ = $DROP\_INTERCEPT_S$)
- Private long code mask indicator: If the mobile station is using the private long code mask on the Serving Frequency, it shall set $SF\_PRIVATE\_LCM_S$ to '1'; otherwise, it shall set $SF\_PRIVATE\_LCM_S$ to '0'.
- Private long code mask: If the mobile station is using the private long code mask on the Serving Frequency, it shall set $SF\_PVTLCM\_42_S$ to the PVTLCM_42.
- Public long code mask type: The mobile station shall set $SF\_PLCM\_TYPE_S$ to $PLCM\_TYPE_S$. If $PLCM\_TYPE_S$ equals '0001', the mobile station shall set $SF\_PLCM\_39_S$ to $PLCM\_39_S$.

- Service negotiation type
  ($SF\_SERV\_NEG_S = SERV\_NEG_S$)
- Service configuration:
  Store the current service configuration (service configuration record and non-negotiable service configuration record) in $SF\_SERVICE\_CONFIG_S$
- Call Information:
  Store the list of current calls (Call Control instances, etc.) in SF_CALLS_S
- Message encryption mode: If message encryption is on, the mobile station shall set $SF\_ENCRYPT\_MODE_S$ to '1'; otherwise, the mobile station shall set $SF\_ENCRYPT\_MODE_S$ to '0'.
- Extended nominal power setting of the current cell
  ($SF\_NOM\_PWR\_EXT_S = NOM\_PWR\_EXT_S$)
- Nominal power setting of the current cell
  ($SF\_NOM\_PWR_S = NOM\_PWR_S$)
- Power control step
  ($SF\_PWR\_CNTL\_STEP_S = PWR\_CNTL\_STEP_S$)
- Serving Frequency Active Set (SF Active Set = •For each pilot in the current Active Set: (PILOT_PN, PWR_COMB_IND) •)
- Serving Frequency Code Channel List
  ($SF\_CODE\_CHAN\_LIST_S = CODE\_CHAN\_LIST_S$)

When the message takes effect, the mobile station shall perform the following actions:

- The mobile station shall send a *Handoff Completion Message* or an *Extended Handoff Completion Message* as specified in 2.6.6.2.5.2.
- Update the Active Set, Candidate Set, and Neighbor Set in accordance with the *General Handoff Direction Message* processing (see 2.6.6.2.6.1, 2.6.6.2.6.2, and 2.6.6.2.6.3).
- The mobile station shall delete all pilots that are not listed in the Active Set from the Active Set of the Supplemental Channel for the Forward Supplemental Channel Assignment (if any). If these deleted pilots include all pilots in the Active Set of the Supplemental Channel, the mobile station shall cancel the Forward Supplemental Channel Assignment.
- Discontinue use of all Forward Traffic Channels associated with pilots not listed in the *General Handoff Direction Message*.
- If EXTRA_PARMS is equal to '1', perform the following actions:
  - If $FRAME\_OFFSET_r$ is not equal to $FRAME\_OFFSET_S$, change the frame offset on all of the code channels of the Forward Traffic Channel and of the Reverse Traffic Channel.

- If $RESET\_L2_r$ is equal to '1', and $RETURN\_IF\_HANDOFF\_FAIL_s$ is equal to '0', Layer 3 shall send a L2-Supervision.Request primitive to Layer 2 to reset the acknowledgment procedures, as specified in [4]. The mobile station shall reset the acknowledgment procedures immediately after the action time of the *General Handoff Direction Message*.
- If $RESET\_FPC_r$ is equal to '1' and $RETURN\_IF\_HANDOFF\_FAIL_s$ is equal to '0', initialize the Forward Traffic Channel power control counters, as specified in 2.6.4.1.1.1.
- If $SERV\_NEG\_TYPE_r$ is equal to '1', set $SERV\_NEG_s$ to enabled; otherwise set $SERV\_NEG_s$ to disabled.
- Use the long code mask as follows:
  - If $PRIVATE\_LCM_r$ equals '1', the mobile station shall use the Private Long Code Mask as specified in 2.3.6.
  - If $PRIVATE\_LCM_r$ equals '0', the mobile station shall use the Public Long Code Mask derived from $PLCM\_TYPE_s$ as specified in 2.3.6
  - The mobile station shall indicate to the user the voice privacy mode status.
- Process the ENCRYPT_MODE field, as specified in 2.3.12.2.
- Perform the procedures as specified in 2.6.11.3.

• If EXTRA_PARMS is equal to '0', set the following variables to the values indicated:

- Hard handoff traffic channel preamble count required before transmitting a *Handoff Completion Message* or an *Extended Handoff Completion Message* ($NUM\_PREAMBLE_s$ = '000')
- Complete search flag ($COMPLETE\_SEARCH_s$ = '1')
- CDMA band class for the Target Frequency ($TF\_CDMABAND_s = SF\_CDMABAND_s$)
- Frequency assignment for the Target Frequency ($TF\_CDMACH_s = SF\_CDMACH_s$)

• Store the following parameters from the *General Handoff Direction Message*:

- *General Handoff Direction Message* sequence number ($HDM\_SEQ_s = HDM\_SEQ_r$)
- Forward power control subchannel relative gain ($FPC\_SUBCHAN\_GAIN_s = FPC\_SUBCHAN\_GAIN_r$).
- If the mobile station uses $FPC\_SUBCHAN\_GAIN_s$, the mobile station shall perform the following:

- If $PC\_ACTION\_TIME_r$ is received, the mobile station shall apply its usage of the $FPC\_SUBCHAN\_GAIN_s$ at the time specified by $PC\_ACTION\_TIME_r$.
- If PC_ACTION_TIME is not received and the explicit action time is received, the mobile station shall apply its usage of the $FPC\_SUBCHAN\_GAIN_s$ at the action time.
- If neither $PC\_ACTION\_TIME_r$ nor explicit action time is received, the mobile station shall apply its usage of the $FPC\_SUBCHAN\_GAIN_s$ at the first 80ms boundary occurring at least 80ms after the end of the frame containing the last bit of the *General Handoff Direction Message* sent to the mobile station.

– Reverse Eighth Gating Mode ($REV\_FCH\_GATING\_MODE_s$ = $REV\_FCH\_GATING\_MODE_r$).

– Reverse Power Control Delay if $REV\_PWR\_CNTL\_DELAY\_INCL_r$ is equal to ‘1’ ($REV\_PWR\_CNTL\_DELAY_s$ = $REV\_PWR\_CNTL\_DELAY_r$).

– Concurrent services supported indicator ($CS\_SUPPORTED_s$ = $CS\_SUPPORTED_r$).

– Forward Packet Data Channel supported indicator ($FOR\_PDCH\_SUPPORTED_s$ = $FOR\_PDCH\_SUPPORTED_r$).

– Pilot information request supported indicator ($PILOT\_INFO\_REQ\_SUPPORTED_s$ = $PILOT\_INFO\_REQ\_SUPPORTED_r$).

– If SEARCH_INCLUDED is equal to ‘1’, store the following:

  - Search window size for the Active Set and Candidate Set ($SRCH\_WIN\_A_s$ = $SRCH\_WIN\_A_r$)
  - Pilot detection threshold (T_ADD_s = T_ADD_r)
  - Pilot drop threshold (T_DROP_s = T_DROP_r)
  - Active Set versus Candidate Set comparison threshold (T_COMP_s = T_COMP_r)
  - Drop timer value (T_TDROP_s = T_TDROP_r)
  - Drop timer range value ($T\_TDROP\_RANGE_s$ = $T\_TDROP\_RANGE_r$) if $T\_TDROP\_RANGE\_INCL_r$ is equal to '1'; otherwise, ($T\_TDROP\_RANGE_s$ = '0000')
  - Soft slope for the dynamic add and drop thresholds ($SOFT\_SLOPE_s$ = $SOFT\_SLOPE_r$)
  - Intercept for the dynamic add threshold ($ADD\_INTERCEPT_s$ = $ADD\_INTERCEPT_r$)

- + Intercept for the dynamic drop threshold ($DROP\_INTERCEPT_s = DROP\_INTERCEPT_r$)

- – If EXTRA_PARMS is equal to ‘1’, store the following:
  - + Protocol revision level ($P\_REV_s = P\_REV_r$), and protocol revision level currently in use ($P\_REV\_IN\_USE_s$ = min (P_REV_s, $MOB\_P\_REV_p$ of the current band class))
  - + If the mobile station supports packet data service options, the packet data services zone identifier ($PACKET\_ZONE\_ID_s = PACKET\_ZONE\_ID_r$)
  - + Frame offset ($FRAME\_OFFSET_s = FRAME\_OFFSET_r$)
  - + Acknowledgment procedures reset indicator (If $RETURN\_IF\_HANDOFF\_FAIL_s$ is equal to ‘1’, set $TF\_RESET\_L2_s$ to $RESET\_L2_r$)
  - + Indicator to initialize the Forward Traffic Channel power control counters (If $RETURN\_IF\_HANDOFF\_FAIL_s$ is equal to ‘1’, set $TF\_RESET\_FPC_s$ to $RESET\_FPC_r$)
  - + Nominal power setting of the target cell ($NOM\_PWR_s = NOM\_PWR_r$)
  - + Extended nominal power setting of the target cell (If $CDMABAND_s$ = ‘00000’ or $CDMABAND_s$ = ‘00011’, then $NOM\_PWR\_EXT_s$ = ‘0’; otherwise, $NOM\_PWR\_EXT_s = NOM\_PWR\_EXT_r$)
  - + Hard handoff traffic channel preamble count required before transmitting a *Handoff Completion Message* or an *Extended Handoff Completion Message* ($NUM\_PREAMBLE_s = NUM\_PREAMBLE_r$)
  - + CDMA band class for the Target Frequency ($TF\_CDMABAND_s = BAND\_CLASS_r$ and $CDMABAND_s = BAND\_CLASS_r$)
  - + Frequency assignment for the Target Frequency ($TF\_CDMACH_s = CDMA\_FREQ_r$ and $CDMACH_s = CDMA\_FREQ_r$)
  - + Complete search flag ($COMPLETE\_SEARCH_s = COMPLETE\_SEARCH_r$)
  - + Periodic search flag ($PERIODIC\_SEARCH_s = PERIODIC\_SEARCH_r$)
  - + Nominal code channel output power offset relative to the Reverse Pilot Channel power ($RLGAIN\_TRAFFIC\_PILOT_s = RLGAIN\_TRAFFIC\_PILOT_r$)

- – If EXTRA_PARMS is equal to ‘1’ and DEFAULT_RLAG is equal to ‘1’, the mobile station shall set each entry of the Reverse Link Attribute Adjustment Gain Table and Reverse Channel Adjustment Gain Table (see [2]) to 0.

- – If REV_PARMS_INCLUDED is included and is equal to '1', the mobile station shall store the following:
  - + Neighbor pilot strength measurement threshold offset ($T\_MULCHAN_s = T\_MULCHAN_r$)

+ Reverse Supplemental Code Channel beginning of transmission preamble length ($BEGIN\_PREAMBLE_s$ = $BEGIN\_PREAMBLE_r$)
+ Reverse Supplemental Code Channel resumption of transmission preamble length ($RESUME\_PREAMBLE_s$ = $RESUME\_PREAMBLE_r$)

– For each pilot included in the message, the mobile station shall store the following:
  + PILOT_PN, the pilot PN sequence offset index
  + PWR_COMB_IND, the power control symbol combining indicator

– If USE_PWR_CNTL_STEP is equal to '1' and $PWR\_CNTL\_STEP_r$ corresponds to a power control step size supported by the mobile station (see [2]), then the mobile station shall set $PWR\_CNTL\_STEP_s$ to $PWR\_CNTL\_STEP_r$.

• Set the pilot detection threshold for the Target Frequency and the Candidate Frequency:
  – Set $TF\_T\_ADD_s$ to T_ADD_s.
  – If the Target Frequency is the same as the Candidate Frequency ($TF\_CDMABAND_s$ is equal to $CF\_CDMABAND_s$ and TF_CDMACH_s is equal to CF_CDMACH_s), set $CF\_T\_ADD_s$ to T_ADD_s.

• If FOR_INCLUDED is included and is equal to '0', the mobile station shall perform the following:
  – The mobile station shall update the Code Channel List, $CODE\_CHAN\_LIST_s$, as specified in 2.6.8.
  – If $USE\_FOR\_HDM\_SEQ_s$ is equal to '1' and $FOR\_LINKED\_HDM\_SEQ_s$ is equal to HDM_SEQ_r (this indicates that there is pending Forward Supplemental Code Channel assignment information, received in a *Supplemental Channel Assignment Message*, linked to this *General Handoff Direction Message*), then the mobile station shall perform the following actions:
    + The mobile station shall set $USE\_FOR\_HDM\_SEQ_s$ to '0'.
    + If $SCAM\_FOR\_ORDER_s$ is equal to '0', the mobile station shall stop processing all Forward Supplemental Code Channels at the action time of the *General Handoff Direction Message*.
    + If $SCAM\_FOR\_ORDER_s$ is equal to '1', the mobile station shall start processing the Forward Supplemental Code Channels specified in $CODE\_CHAN\_LIST_s$ at the action time of the *General Handoff Direction Message*, for a period of time determined by the following rules:

- If $SCAM\_FOR\_DURATION\_MODE_S$ is equal to '1', the mobile station shall continue processing the Forward Supplemental Code Channels for a period of ($FOR\_DURATION_S \times 80$) ms, until it receives a subsequent *General Handoff Direction Message* or a *Supplemental Channel Assignment Message* that specifies a different Forward Supplemental Code Channel assignment.
- If $SCAM\_FOR\_DURATION\_MODE_S$ is equal to '0', the mobile station shall continue processing the Forward Supplemental Code Channels until it receives a subsequent *Supplemental Channel Assignment Message* or a *General Handoff Direction Message* that specifies a different Forward Supplemental Code Channel assignment.

– If $USE\_FOR\_HDM\_SEQ_S$ is equal to '0' or $FOR\_LINKED\_HDM\_SEQ_S$ is not equal to HDM_SEQ_r, and if the mobile station is currently processing Forward Supplemental Code Channels, it shall continue processing the Forward Supplemental Code Channels using the updated Code Channel List, $CODE\_CHAN\_LIST_S$.

• If NNSCR_INCLUDED field is included and set to '1' and SCR_INCLUDED field is either not included or included but set to '0', the mobile station shall process the received Non-negotiable Service Configuration Record as specified in 2.6.4.1.13 at the action time of this message. If $SYNC\_ID\_INCL_r$ is set to '1', the mobile station shall perform the following:

– The mobile station shall store the synchronization identifier received from the base station ($SYNC\_ID_S = SYNC\_ID_r$).

– The mobile station shall store the current service configuration as specified in 2.6.4.1.2.2.5.1 at the action time of this message.

Otherwise, the mobile station shall set $SYNC\_ID_S$ to NULL.

• If FOR_INCLUDED is included and is equal to '1', then the mobile station shall process the Forward Supplemental Code Channel assignment information as follows:

– The mobile station shall set $USE\_FOR\_HDM\_SEQ_S$ to '0'.

– If $FOR\_START\_TIME_S$ specifies a time which is after the action time of the *General Handoff Direction Message*, the mobile station shall cancel any pending Forward Supplemental Code Channel assignment and shall set $FOR\_START\_TIME_S$ to NULL.

– The•mobile station shall update the Code Channel List, $CODE\_CHAN\_LIST_S$, in accordance with the value of FOR_SUP_CONFIG, as specified in 2.6.8.

– If FOR_SUP_CONFIG is equal to '00' or '10', the mobile station should stop processing Forward Supplemental Code Channels, if any, when the message takes effect.

- If FOR_SUP_CONFIG is equal to '01' or '11', the mobile station shall set PILOT_GATING_USE_RATE to '0' at the action time of the message and start processing the Forward Supplemental Code Channels in the updated Code Channel List, $CODE\_CHAN\_LIST_S$, at the action time of the message, for a period of time determined by the following rules:
  - If USE_FOR_DURATION is equal to '1', the mobile station shall set $FOR\_DURATION_S$ to $FOR\_DURATION_r$. The mobile station shall continue processing the Forward Supplemental Code Channels for a period of ($FOR\_DURATION_S \times 80$) ms, until it receives a subsequent *Supplemental Channel Assignment Message* or a *General Handoff Direction Message* that specifies a different Forward Supplemental Code Channel assignment.
  - If USE_FOR_DURATION is equal to '0', the mobile station shall continue processing the Forward Supplemental Code Channels until it receives a subsequent *Supplemental Channel* Assignment *Message* or a *General Handoff Direction Message* that specifies a different Forward Supplemental Code Channel assignment.

- If REV_INCLUDED is included and is equal to '0', the mobile station shall perform the following:
  - If $USE\_REV\_HDM\_SEQ_S$ is equal to '1' and $REV\_LINKED\_HDM\_SEQ_S$ is equal to HDM_SEQ_r (this indicates that there is pending Reverse Supplemental Code Channel assignment information, received in a *Supplemental Channel Assignment Message*, linked to this *General Handoff Direction Message*), the mobile station shall perform the following actions:
    - If $NUM\_REV\_CODES_S$ is equal to '000', the mobile station shall stop transmitting on all Reverse Supplemental Code Channels at the action time of the message.
    - If $NUM\_REV\_CODES_S$ is not equal to '000', the mobile station may start transmitting on $NUM\_REV\_CODES_S$ Reverse Supplemental Code Channels at the action time of the message, for a duration of time determined by the following rules:
      - If $SCAM\_REV\_DURATION\_MODE_S$ is equal to '1', the mobile station may continue transmitting on the Reverse Supplemental Code Channels for a period of ($REV\_DURATION_S \times 80$) ms, until it receives a subsequent *General Handoff Direction Message* or a *Supplemental Channel Assignment Message* that specifies a different Reverse Supplemental Code Channel assignment.

- If $SCAM\_REV\_DURATION\_MODE_S$ is equal to '0', the mobile station may continue transmitting on the Reverse Supplemental Code Channels until it receives a subsequent *General Handoff Direction Message* or a *Supplemental Channel Assignment Message* that specifies a different Reverse Supplemental Code Channel assignment.

  + The mobile station shall set $USE\_REV\_HDM\_SEQ_S$ to '0'.

  – If $USE\_REV\_HDM\_SEQ_S$ is equal to '0' or $REV\_LINKED\_HDM\_SEQ_S$ is not equal to HDM_SEQ_r, and if the previous Reverse Supplemental Code Channel assignment is still valid, the mobile station may continue to transmit on the Reverse Supplemental Code Channels according to the previously specified Reverse Supplemental Code Channel assignment.

• If REV_INCLUDED is included and is equal to '1', then the mobile station shall process the Reverse Supplemental Code Channel assignment information as follows:

  – The mobile station shall set $REV\_DTX\_DURATION_S$ to $REV\_DTX\_DURATION_r$.

  – The mobile station shall set $USE\_REV\_HDM\_SEQ_S$ to '0'.

  – If $REV\_START\_TIME_S$ specifies a time which is after the action time of the *General Handoff Direction Message*, the mobile station shall cancel any pending Reverse Supplemental Code Channel assignment and shall set $REV\_START\_TIME_S$ to NULL.

  – If CLEAR_RETRY_DELAY is equal to '1', the mobile station shall cancel any previously indicated retry delay and shall set $RETRY\_DELAY_S$[40] to 0; otherwise, the mobile station shall continue to honor any previously active retry delay stored in $RETRY\_DELAY_S$.

  – The mobile station shall set $NUM\_REV\_CODES_S$ to $NUM\_REV\_CODES_r$, and shall perform the following actions:

    + If $NUM\_REV\_CODES_S$ is equal to '000', the mobile station shall stop transmitting on all Reverse Supplemental Code Channels at the action time of the message.

    + If $NUM\_REV\_CODES_S$ is not equal to '000', the mobile station shall set PILOT_GATING_USE_RATE to '0' at the action time of the message and may start transmitting on $NUM\_REV\_CODES_S$ Reverse Supplemental Code Channels at the action time of the message, for a duration of time determined by the following rules:

---

[40] The CLEAR_RETRY_DELAY field received in *General Handoff Direction Message* does not affect the $RETRY\_DELAY_S$[RETRY_TYPE] values.

- If $USE\_REV\_DURATION_r$ is equal to '1', the mobile station shall set $REV\_DURATION_s$ to $REV\_DURATION_r$. The mobile station may continue transmitting on the Reverse Supplemental Code Channels for a period of ($REV\_DURATION_s \times 80$) ms, until it receives a subsequent *General Handoff Direction Message* or a *Supplemental Channel Assignment Message* that specifies a different Reverse Supplemental Code Channel assignment.
- If USE_REV_DURATION is equal to '0', the mobile station may continue to transmit on the Reverse Supplemental Code Channels until it receives a subsequent *General Handoff Direction Message* or a *Supplemental Channel Assignment Message* that specifies a different Reverse Supplemental Code Channel assignment.

– The mobile station shall store $USE\_T\_ADD\_ABORT_r$, the Reverse Supplemental Code Channel assignment T_ADD abort indicator, as $USE\_T\_ADD\_ABORT_s$.

• The mobile station shall set $IGNORE\_SCAM_s$ and $IGNORE\_ESCAM_s$ to '0'.

• If $PERIODIC\_SEARCH_s$ is equal to '0' and a periodic search is in progress, the mobile station shall abort the periodic search (see 2.6.6.2.8.3.4 and 2.6.6.2.10.4).

• Perform a soft or hard handoff depending on the following conditions:

– If any of the following conditions is true, the mobile station shall perform a hard handoff:

+ EXTRA_PARMS is set to '1' and either $BAND\_CLASS_r$ is not equal to $SF\_CDMABAND_s$, $CDMA\_FREQ_r$ is not equal to SF_CDMACH_s, or $FRAME\_OFFSET_r$ is not equal to $SF\_FRAME\_OFFSET_s$, or

+ The set of pilots specified by the message is disjoint from the Active Set prior to the action time of the message.

– If the mobile station performs a hard handoff, it shall perform the following:

+ If a Periodic Serving Frequency Pilot Report Procedure is in progress, the mobile station shall abort the procedure (see 2.6.6.2.12).

+ If a Candidate Frequency periodic search is in progress, the mobile station shall abort the periodic search (see 2.6.6.2.8.3.4 and 2.6.6.2.10.4).

+ The mobile station shall cancel the Forward Supplemental Channel assignment or the Reverse Supplemental Channel assignment (if any).

+ If $RETURN\_IF\_HANDOFF\_FAIL_s$ is equal to '0', the mobile station shall perform actions specified in 2.6.6.2.8.1. If the message specifies more than one pilot, the mobile station shall also perform actions specified in 2.6.6.2.7.1 and 2.6.6.2.7.2.

+ If $RETURN\_IF\_HANDOFF\_FAIL_S$ is equal to '1', the mobile station shall perform actions specified in 2.6.6.2.8.2. If the message specifies more than one pilot, the mobile station shall also perform actions specified in 2.6.6.2.7.1 and 2.6.6.2.7.2.

– Otherwise, the mobile station shall perform a soft handoff as specified in 2.6.6.2.7.

10. *Periodic Pilot Measurement Request Order:* The mobile station shall perform the following:

- If the PPSMM timer is enabled, disable it.
- If ORDQ is equal to '11111111', the mobile station shall send a *Periodic Pilot Strength Measurement Message* to the base station within T_{56m} seconds.
- If ORDQ is not equal to '11111111', the mobile station shall perform the following:
  - Set the $MIN\_PILOT\_PWR\_THRESH_S$ to $MIN\_PILOT\_PWR\_THRESH_r$ received from the *Periodic Pilot Strength Measurement Request Order*.
  - Set the $MIN\_PILOT\_EC\_IO\_THRESH_S$ to $MIN\_PILOT\_EC\_IO\_THRESH_r$ received from the *Periodic Pilot Strength Measurement Request Order*.
  - Set $PPSMM\_PERIOD_S$ equal to the larger value of ORDQ and the total length of time, in units of 80 ms, required by the mobile station to update the pilot strength measurement of each pilot in the Active Set and the Candidate Set.
  - Perform the Periodic Serving Frequency Pilot Report Procedure as specified in 2.6.6.2.12.
- If the mobile station sends the *Periodic Pilot Strength Measurement Message* and if $INCL\_SETPT_r$ is equal to '1', the mobile station shall include outer loop E_b/N_t setpoint information corresponding to the physical channel specified by $FPC\_PRI\_CHAN_S$, and Supplemental Channel outer loop E_b/N_t setpoint information if one or more Supplemental Channels are assigned, in the *Periodic Pilot Strength Measurement Message*.

11. *Universal Handoff Direction Message:* The mobile station shall process the message as follows:

In addition to the requirements in this section, if the SCR_INCLUDED field is included in this message and is set to '1', the mobile station shall also process this message in accordance with the requirements for the active service subfunction (see 2.6.4.1.2.2).

The mobile station shall send a *Mobile Station Reject Order* with the ORDQ field set to the specified value if any of the following conditions is true, and shall not perform any other action described in this section for processing the *Universal Handoff Direction Message*:

- The mobile station shall send a *Mobile Station Reject Order* with the ORDQ field

set to '00000110' (capability not supported), if the mobile station does not support the band class specified in *the Universal Handoff Direction Message*.

- If the SCR_INCLUDED field is included in this message and is set to '1', the mobile station shall perform the following:

  - The mobile station shall send a *Mobile Station Reject Order* with the ORDQ field set to '00000111' (message cannot be handled by the current mobile station configuration), if the mobile station does not support the service configuration specified in the *Universal Handoff Direction Message*.

  - The mobile station shall send a *Mobile Station Reject Order* (ORDQ = '00000111') within T_{56m} seconds, if the mobile station supports the service configuration specified but does not accept the service configuration specified in the *Universal Handoff Direction Message*.

- The mobile station shall send a *Mobile Station Reject Order* with the ORDQ field set to '00000111' (message cannot be handled by the current mobile station configuration), if the NNSCR_INCLUDED field is included and set to '1' and the SCR_INCLUDED field is either not included or included but set to '0', and the mobile station does not support the configuration specified in the non-negotiable service configuration information record in the *Universal Handoff Direction Message*.

- If the CC_INFO_INCL field is included in this message and is set to '1', the mobile station shall perform the following for each of the NUM_CALLS_ASSIGN call assignments included in this message:

  – If there already exists or currently pending instantiation a Call Control instance identified by CON_REF_r, the mobile station shall send a *Mobile Station Reject Order* with ORDQ field set to '00010010' (a call control instance is already present with the specified identifier), with the CON_REF field of the order set to CON_REF_r.

  – If $RESPONSE\_IND_r$ equals '1' and TAG_r does not match any of the TAG values contained in the list TAG_OUTSTANDING_LIST, the mobile station shall send a *Mobile Station Reject Order* with ORDQ field set to '00010011' (TAG received does not match TAG stored), with the TAG field of the order set to TAG_r, and the CON_REF field of the order set to CON_REF_r.

  – If the mobile station does not accept this call assignment, the mobile station shall send a *Mobile Station Reject Order* with ORDQ field set to '00010000' (call assignment not accepted), with the CON_REF field of the order set to CON_REF_r.

- The mobile station shall send a *Mobile Station Reject Order* with the ORDQ field set to '00001010' (search set not specified), if the PERIODIC_SEARCH field is included in the *Universal Handoff Direction Message* and is set to '1' and the

Candidate Frequency Search Set is empty.

- The mobile station shall send a *Mobile Station Reject Order* with the ORDQ field set to '00000011' (message structure not acceptable), if the message specifies the Forward/Reverse Supplemental Channel assignment, the most significant bit of CH_IND_r is equal to '0', and CH_IND_r is not equal to '000'.

- The mobile station shall send a *Mobile Station Reject Order* with the ORDQ field set to '00000111' (message can not be handled by the current mobile station configuration), if the message includes a reverse Supplemental Channel assignment, and any of the following conditions are true:

  – any of the mobile station's reverse supplemental channel configuration parameter for the corresponding Supplemental Channel is NULL, or

  – the message includes a Reverse Packet Data Channel assignment.

- The mobile station shall send a *Mobile Station Reject Order* with the ORDQ field set to '00000111' (message can not be handled by the current mobile station configuration), if the message includes a forward Supplemental Channel assignment and any of the mobile station's forward supplemental channel configuration parameters for the corresponding Supplemental Channel is NULL.

- The mobile station shall send a Mobile *Station Reject Order* with the ORDQ field set to '00001101' (search period too short), if the PERIODIC_SEARCH field is included in the *Universal Handoff Direction Message* and is set to '1', and *search_period* is less than (max *(fwd_time, rev_time)* + T_{71m} seconds), where

  search_period = time period corresponding to $SEARCH\_PERIOD_s$ shown in Table 2.6.6.2.8.3.2-1,

  fwd_time = the mobile station's estimate of the total length of time, in seconds, for which the mobile station will need to suspend its current Forward Traffic Channel processing in order to tune to the CDMA Candidate Frequency, to search the Candidate Frequency Search Set, and to re-tune to the Serving Frequency; if the mobile station searches the Candidate Frequency Search Set in multiple visits, *fwd_time* is the total time for all visits to the CDMA Candidate Frequency in a search period (see 2.6.6.2.8.3.2),

  and

  rev_time = the mobile station's estimate of the total length of time, in seconds, for which the mobile station will need to suspend its current Reverse Traffic Channel processing in order to tune to the CDMA Candidate Frequency, to search the Candidate Frequency Search Set, and to re-tune to the Serving Frequency; if the mobile station searches the Candidate Frequency Search Set in multiple visits, *rev_time* is the total time for all visits to the CDMA Candidate Frequency in a search period.

- The mobile station shall send a *Mobile Station Reject Order* with the ORDQ field set to '00000111' (message can not be handled by the current mobile station configuration), if CH_IND_r is equal to '000', and $EXT\_CH\_IND_r$ is not defined in Table 3.7.2.3.2.4-11.
- The mobile shall send a *Mobile Station Reject Order* with the ORDQ field set to '00011100' (PLCM_TYPE mismatch) if $PLCM\_TYPE_r$ equals '0010' and IMSI_O is derived from IMSI_T or if $PLCM\_TYPE_r$ equals '0011' and IMSI_O is derived from IMSI_M.

If none of the above conditions is true, the mobile station shall perform the actions described in the remainder of this section to process the *Universal Handoff Direction* Message at the action time of the message.

If EXTRA_PARMS is equal to '1', the mobile station shall store the return on failure indicator from the *Universal Handoff Direction Message* ($RETURN\_IF\_HANDOFF\_FAIL_s$ = $RETURN\_IF\_HANDOFF\_FAIL_r$); otherwise the mobile station shall set $RETURN\_IF\_HANDOFF\_FAIL_s$ to '0'.

The mobile station shall set $RETURN\_IF\_HANDOFF\_FAIL_s$ to '0' (disable return on failure) if any of the following conditions is true:

- If $P\_REV\_IN\_USE_s$ is less than or equal to four and the mobile station does not support hard handoff with return on failure, or
- At least one of the pilots specified by the message is also included in the Active Set prior to the action time of the message, and one of the following conditions is true:
  - EXTRA_PARMS is equal to '0', or
  - EXTRA_PARMS is equal to '1', the message specifies the same Frequency Assignment as the Serving Frequency ($BAND\_CLASS_r$ is equal to $CDMABAND_s$ and $CDMA\_FREQ_r$ is equal to $CDMACH_s$), and $FRAME\_OFFSET_r$ is equal to $FRAME\_OFFSET_s$.

The mobile station shall store the following parameters from its current configuration:

- CDMA band class ($SF\_CDMABAND_s$ = $CDMABAND_s$)
- Frequency assignment (SF_CDMACH_s = $CDMACH_s$)
- Frame Offset ($SF\_FRAME\_OFFSET_s$ = $FRAME\_OFFSET_s$)

If $RETURN\_IF\_HANDOFF\_FAIL_s$ is equal to '1', the mobile station shall also store the following parameters from its current configuration:

- Protocol revision level ($SF\_P\_REV_s$ = P_REV_s)
- Protocol revision level in use on the Serving Frequency ($SF\_P\_REV\_IN\_USE_s$ = $P\_REV\_IN\_USE_s$)
- Search window size for the Active Set and Candidate Set ($SF\_SRCH\_WIN\_A_s$ = $SRCH\_WIN\_A_s$)

- Search window size for the Neighbor Set ($SF\_SRCH\_WIN\_N_S = SRCH\_WIN\_N_S$),
- Search window size for the Remainder Set ($SF\_SRCH\_WIN\_R_S = SRCH\_WIN\_R_S$)
- Pilot detection threshold ($SF\_T\_ADD_S = T\_ADD_S$)
- Pilot drop threshold ($SF\_T\_DROP_S = T\_DROP_S$)
- Active Set versus Candidate Set comparison threshold ($SF\_T\_COMP_S = T\_COMP_S$)
- Drop timer value ($SF\_T\_TDROP_S = T\_TDROP_S$)
- Drop timer range value ($SF\_T\_TDROP\_RANGE_S = T\_TDROP\_RANGE_S$)
- Soft slope for the dynamic add and drop thresholds ($SF\_SOFT\_SLOPE_S = SOFT\_SLOPE_S$)
- Intercept for the dynamic add threshold ($SF\_ADD\_INTERCEPT_S = ADD\_INTERCEPT_S$)
- Intercept for the dynamic drop threshold ($SF\_DROP\_INTERCEPT_S = DROP\_INTERCEPT_S$)
- Private long code mask indicator: If the mobile station is using the private long code mask on the Serving Frequency, it shall set $SF\_PRIVATE\_LCM_S$ to '1'; otherwise, it shall set $SF\_PRIVATE\_LCM_S$ to '0'.
- Private long code mask: If the mobile station is using the private long code mask on the Serving Frequency, it shall set $SF\_PVTLCM\_42_S$ to the PVTLCM_42.
- Public long code mask type: The mobile station shall set $SF\_PLCM\_TYPE_S$ to $PLCM\_TYPE_S$. If $PLCM\_TYPE_S$ equals '0001', the mobile station shall set $SF\_PLCM\_39_S$ to $PLCM\_39_S$.
- Service negotiation type ($SF\_SERV\_NEG_S = SERV\_NEG_S$)
- Service configuration: Store the current service configuration (service configuration record and non-negotiable service configuration record) in $SF\_SERVICE\_CONFIG_S$
- Call Information:
  Store the list of current calls (Call Control instances, etc.) in SF_CALLS_S
- Message encryption mode: If message encryption is on, the mobile station shall set $SF\_ENCRYPT\_MODE_S$ to '1'; otherwise, the mobile station shall set $SF\_ENCRYPT\_MODE_S$ to '0'.
- Extended nominal power setting of the current cell ($SF\_NOM\_PWR\_EXT_S = NOM\_PWR\_EXT_S$)
- Nominal power setting of the current cell ($SF\_NOM\_PWR_S = NOM\_PWR_S$)
- Power control step ($SF\_PWR\_CNTL\_STEP_S = PWR\_CNTL\_STEP_S$)

- Serving Frequency Active Set (SF Active Set = (For each pilot in the current Active Set: (PILOT_PN, PWR_COMB_IND)))
- Serving Frequency Code Channel List ($SF\_CODE\_CHAN\_LIST_s$ = $CODE\_CHAN\_LIST_s$)

If NNSCR_INCLUDED field is included and set to '1' and SCR_INCLUDED field is either not included or included but set to '0', the mobile station shall process the received Non-negotiable Service Configuration Record as specified in 2.6.4.1.13 at the action time of this message. If $SYNC\_ID\_INCL_r$ is set to '1', the mobile station shall perform the following:

- The mobile station shall store (if included) the synchronization identifier received from the base station corresponding to this service configuration ($SYNC\_ID_s$ = $SYNC\_ID_r$).
- The mobile station shall store the current service configuration as specified in 2.6.4.1.2.2.5.1 at the action time of this message.

Otherwise, the mobile station shall set $SYNC\_ID_s$ to NULL.

If $SYNC\_ID\_INCL_r$ is set to '1', NNSCR_INCLUDED field is not included or is included and set to '0', and SCR_INCLUDED is not included or is included and set to '0', the mobile station shall perform the following:

- The mobile station shall store the synchronization identifier received from the base station ($SYNC\_ID_s$ = $SYNC\_ID_r$).
- If the currently used service configuration has a corresponding SYNC_ID, the mobile station shall perform one of the following:
  - If the current SID (if SID_r is included in the message then the current SID is SID_r; otherwise, the current SID is SID_s) or current NID (if NID_r is included in the message then the current NID is NID_r; otherwise, the current NID is NID_s) is not equal to the stored SID or NID corresponding to the currently used service configuration, the mobile station shall store the current service configuration as specified in 2.6.4.1.2.2.5.1 at the action time of this message.
  - Otherwise, the mobile station shall update the stored SYNC_ID value corresponding to the currently used service configuration with $SYNC\_ID_r$.
- If the currently used service configuration does not have a corresponding SYNC_ID, the mobile station shall store the current service configuration as specified in 2.6.4.1.2.2.5.1 at the action time of this message.

When the message takes effect, the mobile station shall perform the following actions:

- The mobile station shall send a *Handoff Completion Message* or an *Extended Handoff Completion Message* as specified in 2.6.6.2.5.2.

- Update the Active Set, Candidate Set, and Neighbor Set in accordance with the *Universal Handoff Direction Message* processing (see 2.6.6.2.6.1, 2.6.6.2.6.2, and 2.6.6.2.6.3).
- Discontinue use of all Forward Traffic Channels associated with pilots not in the updated Active Set.
- The mobile station shall perform the following to determine the long code mask to use after the handoff:
  - If the PRIVATE_LCM field is not included and $PLCM\_TYPE\_INCL_r$ equals '0', the mobile station shall continue to use the long code mask currently in use.
  - If the PRIVATE_LCM field is not included and $PLCM\_TYPE\_INCL_r$ equals '1', the mobile station shall perform the following:
    + The mobile station shall set $PLCM\_TYPE_s$ to $PLCM\_TYPE_r$; if $PLCM\_TYPE_r$ equals '0001', the mobile station shall set $PLCM\_39_s$ to $PLCM\_39_r$.
    + The mobile station shall use the public long code mask derived from $PLCM\_TYPE_s$ as specified in 2.3.6.
  - If $PRIVATE\_LCM_r$ equals '1' and $PLCM\_TYPE\_INCL_r$ equals '0', the mobile station shall perform the following:
    + The mobile station shall use the private long code mask.
  - If $PRIVATE\_LCM_r$ equals '1' and $PLCM\_TYPE\_INCL_r$ equals '1', the mobile station shall perform the following:
    + The mobile station shall use the private long code mask.
    + The mobile station shall set $PLCM\_TYPE_s$ to $PLCM\_TYPE_r$; if $PLCM\_TYPE_r$ equals '0001', the mobile station shall set $PLCM\_39_s$ to $PLCM\_39_r$.
  - If $PRIVATE\_LCM_r$ equals '0' and $PLCM\_TYPE\_INCL_r$ equals '0', the mobile station shall perform the following:
    + The mobile station shall use the public long code mask derived from $PLCM\_TYPE_s$ as specified in 2.3.6.
  - If $PRIVATE\_LCM_r$ equals '0' and $PLCM\_TYPE\_INCL_r$ equals '1', the mobile station shall perform the following:
    + The mobile station shall set $PLCM\_TYPE_s$ to $PLCM\_TYPE_r$; if $PLCM\_TYPE_r$ equals '0001', the mobile station shall set $PLCM\_39_s$ to $PLCM\_39_r$.
    + The mobile station shall use the public long code mask derived from $PLCM\_TYPE_s$ as specified in 2.3.6.
  - The mobile station shall indicate to the user the voice privacy mode status.

- If PARMS_INCL is equal to ‘1’, perform the following actions:
  - Set protocol revision level (P_REV_s = P_REV_r), and protocol revision level currently in use ($P\_REV\_IN\_USE_s$ = min (P_REV_s, $MOB\_P\_REV_p$ of the current band class)).
  - If $SERV\_NEG\_TYPE_r$ is equal to ‘1’, set $SERV\_NEG_s$ to enabled; otherwise set $SERV\_NEG_s$ to disabled.
- If EXTRA_PARMS is equal to ‘1’, perform the following actions:
  - If $FRAME\_OFFSET_r$ is not equal to $FRAME\_OFFSET_s$, change the frame offset on all of the code channels of the Forward Traffic Channel and of the Reverse Traffic Channel.
  - If $RESET\_L2_r$ is equal to ‘1’, and $RETURN\_IF\_HANDOFF\_FAIL_s$ is equal to ‘0’, Layer 3 shall send a L2-Supervision.Request primitive to Layer 2 to reset the acknowledgment procedures, as specified in [4]. The mobile station shall reset the acknowledgment procedures immediately after the action time of the *Universal Handoff Direction Message*.
  - If $RESET\_FPC_r$ is equal to ‘1’ and $RETURN\_IF\_HANDOFF\_FAIL_s$ is equal to ‘0’, initialize the Forward Traffic Channel power control counters, as specified in 2.6.4.1.1.1.
  - Process the ENCRYPT_MODE field, as specified in 2.3.12.2.
  - Perform the procedures as specified in 2.6.11.3.
  - If EXTRA_PARMS is equal to ‘0’, set the following variables to the values indicated:
    - Hard handoff traffic channel preamble count required before transmitting a *Handoff Completion Messag*e or an *Extended Handoff Completion Message* ($NUM\_PREAMBLE_s$ = ‘000’)
    - Complete search flag ($COMPLETE\_SEARCH_s$ = ‘1’)
    - CDMA band class for the Target Frequency ($TF\_CDMABAND_s$ = $SF\_CDMABAND_s$)
    - Frequency assignment for the Target Frequency (TF_CDMACH_s = SF_CDMACH_s)
  - Store the following parameters from the *Universal Handoff Direction Message*:
    - *Universal Handoff Direction Message* sequence number (HDM_SEQ_s = HDM_SEQ_r)
    - Forward power control subchannel relative gain ($FPC\_SUBCHAN\_GAIN_s$ = $FPC\_SUBCHAN\_GAIN_r$).
    - If the mobile station uses $FPC\_SUBCHAN\_GAIN_s$, the mobile station shall perform the following:

+ If $PC\_ACTION\_TIME_r$ is received, the mobile station shall apply its usage of the $FPC\_SUBCHAN\_GAIN_s$ at the time specified by $PC\_ACTION\_TIME_r$.

+ If PC_ACTION_TIME is not received and the explicit action time is received, the mobile station shall apply its usage of the $FPC\_SUBCHAN\_GAIN_s$ at the action time.

+ If neither $PC\_ACTION\_TIME_r$ nor explicit action time is received, the mobile station shall apply its usage of the $FPC\_SUBCHAN\_GAIN_s$ at the first 80ms boundary occurring at least 80ms after the end of the frame containing the last bit of the *Universal Handoff Direction Message* sent to the mobile station.

– Reverse Eighth Gating Mode ($REV\_FCH\_GATING\_MODE_s$ = $REV\_FCH\_GATING\_MODE_r$).

– Reverse Power Control Delay if $REV\_PWR\_CNTL\_DELAY\_INCL_r$ is equal to ‘1’ ($REV\_PWR\_CNTL\_DELAY_s$ = $REV\_PWR\_CNTL\_DELAY_r$).

– Concurrent services supported indicator ($CS\_SUPPORTED_s$ = $CS\_SUPPORTED_r$).

– Maximum number of additional service reference identifiers allowed in origination ($MAX\_ADD\_SERV\_INSTANCE_s$ = $MAX\_ADD\_SERV\_INSTANCE_r$), if included; otherwise, the mobile station shall set $MAX\_ADD\_SERV\_INSTANCE_s$ to 0.

– Control Hold Mode supported indicator ($CHM\_SUPPORTED_s$ = $CHM\_SUPPORTED_r$) if included; otherwise, the mobile station shall perform the following:

+ If $P\_REV\_IN\_USE_s$ is less than 6, set $CHM\_SUPPORTED_s$ to ‘0’.

+ Otherwise, set $CHM\_SUPPORTED_s$ to ‘1’

– CDMA off time report supported indicator ($CDMA\_OFF\_TIME\_REP\_SUP\_IND_s$ = $CDMA\_OFF\_TIME\_REP\_SUP\_IND_r$) .

– If $CDMA\_OFF\_TIME\_REP\_SUP\_IND_r$ is equal to ‘1’, the mobile station shall store CDMA off time report threshold ($CDMA\_OFF\_TIME\_REP\_THRESHOLD_s$ = $CDMA\_OFF\_TIME\_REP\_THRESHOLD_r$ in units specified by $CDMA\_OFF\_TIME\_REP\_UNIT_r$).

– Forward Packet Data Channel supported indicator ($FOR\_PDCH\_SUPPORTED_s$ = $FOR\_PDCH\_SUPPORTED_r$).

– PDCH Control Hold Mode supported indicator ($PDCH\_CHM\_SUPPORTED_s$ = $PDCH\_CHM\_SUPPORTED_r$) if included; otherwise, set $PDCH\_CHM\_SUPPORTED_s$ to ‘0’.

- Reverse Packet Data Channel supported indicator ($REV\_PDCH\_SUPPORTED_s = REV\_PDCH\_SUPPORTED_r$) if included; otherwise, set $REV\_PDCH\_SUPPORTED_s$ to ‘0’.
- Short Data Burst supported indicator ($SDB\_SUPPORTED_s = SDB\_SUPPORTED_r$).
- Pilot information request supported indicator ($PILOT\_INFO\_REQ\_SUPPORTED_s = PILOT\_INFO\_REQ\_SUPPORTED_r$).
- Release to Idle State allowed indicator ($RELEASE\_TO\_IDLE\_IND_s = RELEASE\_TO\_IDLE\_IND_r$).
- If SEARCH_INCLUDED is equal to ‘1’, store the following:
  - Search window size for the Active Set and Candidate Set ($SRCH\_WIN\_A_s = SRCH\_WIN\_A_r$)
  - Pilot detection threshold ($T\_ADD_s = T\_ADD_r$)
  - Pilot drop threshold ($T\_DROP_s = T\_DROP_r$)
  - Active Set versus Candidate Set comparison threshold ($T\_COMP_s = T\_COMP_r$)
  - Drop timer value ($T\_TDROP_s = T\_TDROP_r$)
  - Drop timer range value ($T\_TDROP\_RANGE_s = T\_TDROP\_RANGE_r$) if $T\_TDROP\_RANGE\_INCL_r$ is equal to '1'; otherwise, ($T\_TDROP\_RANGE_s$ = '0000')
  - Soft slope for the dynamic add and drop thresholds ($SOFT\_SLOPE_s = SOFT\_SLOPE_r$)
  - Intercept for the dynamic add threshold ($ADD\_INTERCEPT_s = ADD\_INTERCEPT_r$)
  - Intercept for the dynamic drop threshold ($DROP\_INTERCEPT_s = DROP\_INTERCEPT_r$)
- If EXTRA_PARMS is equal to ‘1’, store the following:
  - If the mobile station supports packet data service options, the packet data services zone identifier ($PACKET\_ZONE\_ID_s = PACKET\_ZONE\_ID_r$).
  - If the mobile station supports packet data service options and the PZ_HYST_ENABLED field is included, the mobile station shall store the packet zone hysteresis enabled indicator ($PZ\_HYST\_ENABLED_s = PZ\_HYST\_ENABLED_r$); otherwise, the mobile station shall set $PZ\_HYST\_ENABLED_s$ to ‘1’.
  - If the PZ_HYST_LIST_LEN field is included, the mobile station shall store the packet zone hysteresis list length (PZ_HYST_LIST_LENs = PZ_HYST_LIST_LENr); otherwise, the mobile station shall set PZ_HYST_LIST_LENs to 4.

+ If the PZ_HYST_ACT_TIMER field is included, the mobile station shall store the packet zone hysteresis activation timer (PZ_HYST_ACT_TIMERs = PZ_HYST_ACT_TIMERr); otherwise, the mobile station shall set PZ_HYST_ACT_TIMERs to 30 seconds.

+ If the PZ_HYST_TIMER_MUL field and the PZ_HYST_TIMER_EXP field are included, the mobile station shall store the packet zone hysteresis timer (PZ_HYST_TIMERs = PZ_HYST_TIMER_MULr × 8 ^ PZ_HYST_TIMER_EXPr); otherwise, the mobile station shall set PZ_HYST_TIMERs to 60 seconds.

+ Frame offset ($FRAME\_OFFSET_s = FRAME\_OFFSET_r$)

+ Acknowledgment procedures reset indicator (If $RETURN\_IF\_HANDOFF\_FAIL_s$ is equal to '1', set $TF\_RESET\_L2_s$ to $RESET\_L2_r$)

+ Indicator to initialize the Forward Traffic Channel power control counters (If $RETURN\_IF\_HANDOFF\_FAIL_s$ is equal to '1', set $TF\_RESET\_FPC_s$ to $RESET\_FPC_r$)

+ Nominal power setting of the target cell ($NOM\_PWR_s = NOM\_PWR_r$)

+ Extended nominal power setting of the target cell (If $CDMABAND_s$ = '00000' or $CDMABAND_s$ = '00011', then $NOM\_PWR\_EXT_s$ = '0'; otherwise, $NOM\_PWR\_EXT_s = NOM\_PWR\_EXT_r$)

+ Hard handoff traffic channel preamble count required before transmitting a *Handoff Completion Message* or an *Extended Handoff Completion Message* ($NUM\_PREAMBLE_s = NUM\_PREAMBLE_r$)

+ CDMA band class for the Target Frequency ($TF\_CDMABAND_s = BAND\_CLASS_r$ and $CDMABAND_s = BAND\_CLASS_r$)

+ Frequency assignment for the Target Frequency ($TF\_CDMACH_s = CDMA\_FREQ_r$ and $CDMACH_s = CDMA\_FREQ_r$)

+ Complete search flag ($COMPLETE\_SEARCH_s = COMPLETE\_SEARCH_r$)

+ Periodic search flag ($PERIODIC\_SEARCH_s = PERIODIC\_SEARCH_r$)

+ Nominal code channel output power offset relative to the Reverse Pilot Channel power ($RLGAIN\_TRAFFIC\_PILOT_s = RLGAIN\_TRAFFIC\_PILOT_r$)

– If EXTRA_PARMS is equal to '1' and DEFAULT_RLAG is equal to '1', the mobile station shall set each entry of the Reverse Link Attribute Adjustment Gain Table and Reverse Channel Adjustment Gain Table (see [2]) to 0.

- If USE_PWR_CNTL_STEP is equal to ‘1’ and $PWR\_CNTL\_STEP_r$ corresponds to a power control step size supported by the mobile station (see [2]), then the mobile station shall set $PWR\_CNTL\_STEP_s$ to $PWR\_CNTL\_STEP_r$.
- If $CLEAR\_RETRY\_DELAY_r$ is equal to ‘1’, the mobile station shall cancel any previously indicated retry delay and shall set $RETRY\_DELAY_s$[RETRY_TYPE] to 0, where RETRY_TYPE is equal to ‘001’, ‘010’, ‘011’, ‘100’, or ‘101’; otherwise, the mobile station shall continue to honor any previously active retry delay stored in $RETRY\_DELAY_s$.
- If $3XFL\_1XRL\_INCL_r$ is equal to ‘1’, the mobile station shall set $1XRL\_FREQ\_OFFSET_s$ to $1XRL\_FREQ\_OFFSET_r$.
- If SCH_INCL_r is equal to ‘1’ and $NUM\_FOR\_ASSIGN_r$ is not equal to ‘00’, the mobile station shall store the following information for each occurrence of the record and process the Forward Supplemental Burst as specified in 2.6.6.2.5.1.1:
  - $FOR\_SCH\_START\_TIME\_INCL_s$[$FOR\_SCH\_ID_r$] = $FOR\_SCH\_START\_TIME\_INCL_r$
  - If $FOR\_SCH\_START\_TIME\_INCL_s$[$FOR\_SCH\_ID_r$] is equal to’1’, set $FOR\_SCH\_START\_TIME_s$[$FOR\_SCH\_ID_r$] = $FOR\_SCH\_START\_TIME_r$
  - $FOR\_SCH\_DURATION_s$[$FOR\_SCH\_ID_r$] = $FOR\_SCH\_DURATION_r$
  - $SCCL\_INDEX_s$[$FOR\_SCH\_ID_r$] = $SCCL\_INDEX_r$
  - If SCH_BCMC_IND field is included the mobile station shall perform the following:
    - If $SCH\_BCMC\_IND_r$ equals ‘1’ and $USE\_ADD\_PLCM\_FOR\_SCH_r$ equals ‘1’, set corresponding SCH_BCMC_IND[$FOR\_SCH\_ID_r$] to ‘1’; otherwise, set SCH_BCMC_IND[$FOR\_SCH\_ID_r$] = ‘0’
  - If $SCH\_BCMC\_IND_r$ is included and equals ‘1’ and $ADD\_PLCM\_FOR\_SCH\_INCL_r$ is included and is set to ‘1’, the mobile station shall store following fields:
    - Set $ADD\_PLCM\_FOR\_SCH\_TYPE_s$ to $ADD\_PLCM\_FOR\_SCH\_TYPE_r$.
    - Set $ADD\_PLCM\_FOR\_SCH\_35_s$ to $ADD\_PLCM\_FOR\_SCH\_35_r$ if $ADD\_PLCM\_FOR\_SCH\_TYPE_r$ is equal to ‘1’.
  - If $SCH\_BCMC\_IND_r$ is included and equals ‘1’, the mobile station shall store following fields:
    - $USE\_ADD\_PLCM\_FOR\_SCH_s$[$FOR\_SCH\_ID_r$] = $USE\_ADD\_PLCM\_FOR\_SCH_r$
    - $FSCH\_OUTERCODE\_INCL_s$[$FOR\_SCH\_ID_r$] = $FSCH\_OUTERCODE\_INCL_r$

- If $FSCH\_OUTERCODE\_INCL_r$ equals ‘1’, the mobile station shall store following fields:
  - $FSCH\_OUTERCODE\_RATE_s[FOR\_SCH\_ID_r] = FSCH\_OUTERCODE\_RATE_r$
  - $FSCH\_OUTERCODE\_OFFSET_s[FOR\_SCH\_ID_r] = FSCH\_OUTERCODE\_OFFSET_r$

– If SCH_INCL_r is equal to ‘1’ and $NUM\_REV\_ASSIGN_r$ is not equal to ‘00’, the mobile station shall store the following information for each occurrence of the record and process the Reverse Supplemental Burst as specified in 2.6.6.2.5.1.2:

+ $REV\_SCH\_START\_TIME\_INCL_s[REV\_SCH\_ID_r] = REV\_SCH\_START\_TIME\_INCL_r$
+ If $REV\_SCH\_START\_TIME\_INCL_s[REV\_SCH\_ID_r]$ is equal to’1’, set $REV\_SCH\_START\_TIME_s[REV\_SCH\_ID_r] = REV\_SCH\_START\_TIME_r$
+ $REV\_SCH\_DURATION_s[REV\_SCH\_ID_r] = REV\_SCH\_DURATION_r$
+ $REV\_SCH\_NUM\_BITS\_IDX_s[REV\_SCH\_ID_r] = REV\_SCH\_NUM\_BITS\_IDX_r$

– The mobile station shall set $BCMC\_ON\_TRAFFIC\_SUP_s$ to $BCMC\_ON\_TRAFFIC\_SUP_r$. If $BCMC\_ON\_TRAFFIC\_SUP_r$ is set to ‘1’, the mobile station shall store $AUTO\_REQ\_TRAF\_ALLOWED\_IND_s = AUTO\_REQ\_TRAF\_ALLOWED\_IND_r$

– If SID_INCL_r is equal to ‘1’, the mobile station shall store the following:

+ System identification ($SID_s = SID_r$)

– If NID_INCL_r is equal to ‘1’, the mobile station shall store the following:

+ Network identification ($NID_s = NID_r$)

– If $ENC\_SUPPORTED_r$ is equal to ‘1’, the mobile station shall store:

+ Signaling encryption supported indicator ($SIG\_ENCRYPT\_SUP_s = SIG\_ENCRYPT\_SUP_r$)
+ User information encryption supported indicator ($UI\_ENCRYPT\_SUP_s = UI\_ENCRYPT\_SUP_r$)

– Sync ID supported indicator ($USE\_SYNC\_ID_s = USE\_SYNC\_ID_r$) if included.

– Channel configuration request allowed indicator ($USE\_CH\_CFG\_RRM_s = USE\_CH\_CFG\_RRM_r$) if included; otherwise, set $USE\_CH\_CFG\_RRM_s$ to ‘0’.

– If $TX\_PWR\_LIMIT\_DEFAULT_r$ is included and set to ‘0’, the mobile station shall perform the following:

+ If the mobile station is being assigned to operate in the 1915MHz – 1920MHz block of the PCS band, the mobile station shall store the transmit power limit $TX\_PWR\_LIMIT_S$ = ($TX\_PWR\_LIMIT_r$ - 30dB);
+ Otherwise, the mobile station shall set $TX\_PWR\_LIMIT_S$ to the limit defined in [11] for the target base station.

– If $TX\_PWR\_LIMIT\_DEFAULT_r$ is included and set to ‘1’, the mobile station shall store $TX\_PWR\_LIMIT_S$ to the limit defined in [11] for the target base station.

– Permission for the mobile station to request QoS settings in the *Origination Message*, *Origination Continuation Message*, or *Enhanced Origination Message* (MOB_QOS_S = MOB_QOS_r) if included.

– The mobile station initiated position location determination supported indicator ($MS\_INIT\_POS\_LOC\_SUP\_IND_S$ = $MS\_INIT\_POS\_LOC\_SUP\_IND_r$).

– If CH_IND_r is equal to ‘101’, the mobile station shall perform the following:

+ The mobile station shall set CH_IND_S = ‘01’.

+ If SCH_INCL_r is equal to ‘1’ and NUM_FOR_SCH is not equal to ‘00000’, for all the NUM_FOR_SCH occurrences, the mobile station shall perform the following:

o The mobile station shall determine, $N\_FSCH\_BITS\_SET_S[FOR\_SCH\_ID_r][SCCL\_INDEX_r]$, the number of information bits per Forward Supplemental Channel frame identified by FOR_SCH_ID and corresponding to the index SCCL_INDEX according to the following rules:

◊ If $FSCH\_VAR\_TABLE\_ID_S[FOR\_SCH\_ID_r]$ is equal to ‘000’, then:

– If $USE\_FLEX\_NUM\_BITS_S$ is equal to '0' or if $USE\_FLEX\_NUM\_BITS_S$ is equal to '1' and $FSCH\_NBIT\_TABLE\_ID_S[FOR\_SCH\_ID_r]$ is equal to ‘0000’, then the mobile station shall set the number of information bits per frame, $N\_FSCH\_BITS\_SET_S[FOR\_SCH\_ID_r][SCCL\_INDEX_r]$ and number of CRC bits per frame, $FSCH\_CRC\_LEN\_SET_S[FOR\_SCH\_ID_r][SCCL\_INDEX_r]$, according to Table 3.7.3.3.2.37-2 using $FOR\_SCH\_NUM\_BITS\_IDX_r$ as the index to the table.

– If $USE\_FLEX\_NUM\_BITS_s$ is equal to '1' and $FSCH\_NBIT\_TABLE\_ID_s[FOR\_SCH\_ID_r]$ is not equal to '0000', then the mobile station shall set the number of CRC bits per frame, $FSCH\_CRC\_LEN\_SET_s[FOR\_SCH\_ID_r][SCCL\_INDEX_r]$, using Table 3.7.5.20-1 and $CRC\_LEN\_IDX_s[FSCH\_NBIT\_TABLE\_ID_s[FOR\_SCH\_ID_r]][FOR\_SCH\_NUM\_BITS\_IDX_r]$ as the index to the table.

The mobile station shall also set the number of information bits per frame corresponding to $SCCL\_INDEX_r$, $N\_FSCH\_BITS\_SET_s[FOR\_SCH\_ID_r][SCCL\_INDEX_r]$, to $NUM\_BITS_s[FSCH\_NBIT\_TABLE\_ID_s[FOR\_SCH\_ID_r]][FOR\_SCH\_NUM\_BITS\_IDX_r]$.

◊ If $FSCH\_VAR\_TABLE\_ID_s[FOR\_SCH\_ID_r]$ is not equal to '000', then:

– The mobile station shall set $N\_FSCH\_BITS\_IDX\_SET_s[FOR\_SCH\_ID_r]$, the set of indices to the number of information bits per frame as follows:

+ If $FOR\_SCH\_NUM\_BITS\_IDX_r$ is equal to '0000', then $N\_FSCH\_BITS\_IDX\_SET_s[FOR\_SCH\_ID_r]$ = **{** $FOR\_SCH\_NUM\_BITS\_IDX_r$ **},**

+ otherwise the mobile station shall set (initialize) $N\_FSCH\_BITS\_IDX\_SET_s[FOR\_SCH\_ID_r]$ = **{**$FOR\_SCH\_NUM\_BITS\_IDX_r$**}** and for i=1, …, $FOR\_SCH\_NUM\_BITS\_IDX_r$ the mobile station shall add $FOR\_SCH\_NUM\_BITS\_IDX_r$ - $VAR\_FSCH\_RATE\_OFFSET_s[FOR\_SCH\_ID_r][FOR\_SCH\_NUM\_BITS\_IDX_r][i]$ to the set specified by $N\_FSCH\_BITS\_IDX\_SET_s[FOR\_SCH\_ID_r]$

– If $USE\_FLEX\_NUM\_BITS_s$ is equal to '0' or if $USE\_FLEX\_NUM\_BITS_s$ is equal to '1' and $FSCH\_NBIT\_TABLE\_ID_s[FOR\_SCH\_ID_r]$ is equal to '0000', then the mobile station shall set $N\_FSCH\_BITS\_SET_s[FOR\_SCH\_ID_r][SCCL\_INDEX_r]$, the set of number of information bits per frame as follows. The ith member of the set $N\_FSCH\_BITS\_SET_s[FOR\_SCH\_ID_r][SCCL\_INDEX_r]$ is obtained using Table 3.7.3.3.2.37-2 and the ith member of the set $N\_FSCH\_BITS\_IDX\_SET_s[FOR\_SCH\_ID_r]$ as the index to the table.

- If $USE\_FLEX\_NUM\_BITS_s$ is equal to '1' and $FSCH\_NBIT\_TABLE\_ID_s[FOR\_SCH\_ID_r]$ is not equal to '0000', then
  - the mobile station shall set $N\_FSCH\_BITS\_SET_s[FOR\_SCH\_ID_r][SCCL\_INDEX_r]$, the set of number of information bits per frame as follows.
    The ith member of the set $N\_FSCH\_BITS\_SET_s[FOR\_SCH\_ID_r][SCCL\_INDEX_r]$ is equal to $NUM\_BITS_s[FSCH\_NBIT\_TABLE\_ID_s[FOR\_SCH\_ID_r]][N\_FSCH\_BITS\_IDX\_SET_s[FOR\_SCH\_ID_r][i]]$, where $N\_FSCH\_BITS\_IDX\_SET_s[FOR\_SCH\_ID_r][i]$ denotes the ith member of the set $N\_FSCH\_BITS\_IDX\_SET_s[FOR\_SCH\_ID_r]$ and,
  - the mobile station shall set $FSCH\_CRC\_LEN\_SET_s[FOR\_SCH\_ID_r][SCCL\_INDEX_r]$, the set of number CRC bits per frame as follows.
    The ith member of the set $FSCH\_CRC\_LEN\_SET_s[FOR\_SCH\_ID_r][SCCL\_INDEX_r]$ using Table 3.7.5.20-1 and $CRC\_LEN\_IDX_s[FSCH\_NBIT\_TABLE\_ID_s[FOR\_SCH\_ID_r]][N\_FSCH\_BITS\_IDX\_SET_s[FOR\_SCH\_ID_r][i]]$ as the index to the table, where $N\_FSCH\_BITS\_IDX\_SET_s[FOR\_SCH\_ID_r][i]$ denotes the ith member of the set $N\_FSCH\_BITS\_IDX\_SET_s[FOR\_SCH\_ID_r]$.

+ If SCH_INCL_r is equal to '1' and NUM_REV_SCH is not equal to '00000', for all the NUM_REV_SCH occurrences, the mobile station shall perform the following:
  - Set $REV\_SCH\_NUM\_BITS\_IDX_s[REV\_SCH\_ID_r]$ to $REV\_SCH\_NUM\_BITS\_IDX_r$.
  - Set $REV\_WALSH\_ID_s[REV\_SCH\_ID_r][REV\_SCH\_NUM\_BITS\_IDX_s]$ to $REV\_WALSH\_ID_r$.

+ For each member of the Active Set included in the message, the mobile station shall perform the following:
  - Set PILOT_PN to $PILOT\_PN_r$.
  - If $SRCH\_OFFSET\_INCL_r$ equals '1', set the SRCH_OFFSET field of PILOT_REC to $SRCH\_OFFSET_r$; otherwise, set the SRCH_OFFSET field of PILOT_REC to '000'.
  - Set ADD_PILOT_REC_INCL to $ADD\_PILOT\_REC\_INCL_r$.

- If $ADD\_PILOT\_REC\_INCL_r$ equals '1', the mobile station shall also perform the following:
  - Set the PILOT_REC_TYPE field of PILOT_REC to $PILOT\_REC\_TYPE_r$.
  - If $PILOT\_REC\_TYPE_r$ is equal to '000', the mobile station shall set the TD_POWER_LEVEL field of PILOT_REC to $TD\_POWER\_LEVEL_r$ and set the TD_MODE field of NGHBR_PILOT_REC to TD_MODE_r.
  - If $PILOT\_REC\_TYPE_r$ is equal to '001', the mobile station shall:
    - Set the AUX_PILOT_QOF field of PILOT_REC to QOF_r.
    - Set the AUX_PILOT_WALSH_CODE field of PILOT_REC to $AUX\_PILOT\_WALSH_r$ with the Walsh Code length specified by $WALSH\_LENGTH_r$.
  - If $PILOT\_REC\_TYPE_r$ is equal to '010', the mobile station shall:
    - Set the AUX_PILOT_TD_QOF field of PILOT_REC to QOF_r.
    - Set the AUX_PILOT_WALSH_CODE field of PILOT_REC to AUX_WALSH_r with the Walsh Code length specified by $WALSH\_LENGTH_r$.
    - Set the AUX_TD_POWER_LEVEL field of PILOT_REC to $AUX\_TD\_POWER\_LEVEL_r$.
    - Set the TD_MODE field of PILOT_REC to TD_MODE_r.
  - If $PILOT\_REC\_TYPE_r$ is equal to '011', the mobile station shall:
    - Set the SR3_PRIMARY_PILOT field of PILOT_REC to $SR3\_PRIMARY\_PILOT_r$.
    - Set the SR3_PILOT_POWER1 field of PILOT_REC to $SR3\_PILOT\_POWER1_r$.
    - Set the SR3_PILOT_POWER2 field of PILOT_REC to $SR3\_PILOT\_POWER2_r$.
  - If $PILOT\_REC\_TYPE_r$ is equal to '100', the mobile station shall:
    - Set the SR3_PRIMARY_PILOT field of PILOT_REC to $SR3\_PRIMARY\_PILOT_r$.
    - Set the SR3_PILOT_POWER1 field of PILOT_REC to $SR3\_PILOT\_POWER1_r$.

- Set the SR3_PILOT_POWER2 field of PILOT_REC to $SR3\_PILOT\_POWER2_r$.
- Set the AUX_PILOT_QOF field of PILOT_REC to QOF_r.
- Set the AUX_PILOT_WALSH_CODE field of PILOT_REC to $AUX\_PILOT\_WALSH_r$ with the Walsh Code length specified by $WALSH\_LENGTH_r$.
- If $ADD\_INFO\_INCL1_r$ is equal to '1', set the AUX_PILOT_QOF1 field of PILOT_REC to $QOF1_r$ and set the AUX_PILOT_WALSH_CODE1 field of PILOT_REC to $AUX\_PILOT\_WALSH1_r$ with the Walsh Code length specified by $WALSH\_LENGTH1_r$; otherwise, set the AUX_PILOT_QOF1 field of PILOT_REC to QOF_r and set the AUX_PILOT_WALSH_CODE1 field of PILOT_REC to $AUX\_PILOT\_WALSH_r$ with the Walsh Code length specified by $WALSH\_LENGTH_r$.
- If $ADD\_INFO\_INCL2_r$ is equal to '1', set the AUX_PILOT_QOF2 field of PILOT_REC to $QOF2_r$ and set the AUX_PILOT_WALSH_CODE2 field of PILOT_REC to $AUX\_PILOT\_WALSH2_r$ with the Walsh Code length specified by $WALSH\_LENGTH2_r$; otherwise, set the AUX_PILOT_QOF2 field of PILOT_REC to QOF_r and set the AUX_PILOT_WALSH_CODE2 field of PILOT_REC to $AUX\_PILOT\_WALSH_r$ with the Walsh Code length specified by $WALSH\_LENGTH_r$.

o Store PWR_COMB_IND, CODE_CHAN_FCH and QOF_MASK_ID_FCH.

o If SCH_INCL_r is equal to '1' and NUM_SCH is equal to '00000', the mobile station shall delete the corresponding pilot from the all entries of the corresponding Supplemental Channel.

o If SCH_INCL_r is equal to '1' and NUM_SCH is not equal to '00000', for each Supplemental Channel included in this record, the mobile station shall:

◊ If PILOT_INCL is equal to '0', then the mobile station shall delete the corresponding pilot from the Active Set of Supplemental Channel for the corresponding $SCCL\_INDEX_r$.

◊ If PILOT_INCL is equal to '1', then for each Supplemental Channel included in this record, the mobile station shall set $PILOT\_PN_s$ $[FOR\_SCH\_ID_r][SCCL\_INDEX_r][i]$ to $PILOT\_PN_r$, $QOF\_ID_s[FOR\_SCH\_ID_r][SCCL\_INDEX_r][i]$ to $QOF\_MASK\_ID\_SCH_r$, and $FOR\_SCH\_CC\_INDEX_s[FOR\_SCH\_ID_r][SCCL\_INDEX_r][i]$ to $CODE\_CHAN\_SCH_r$.

◊ If PILOT_INCL is equal to ‘1’ and CCSH_INCLUDED is set to ‘1’, then for each Supplemental Channel included in this record, the mobile station shall set $CCSH\_ENCODER\_TYPE_S[FOR\_SCH\_ID_r][SCCL\_INDEX_r][i]$ to $CCSH\_ENCODER\_TYPE_r$.

◊ If PILOT_INCL is equal to ‘1’ and CCSH_INCLUDED is set to ‘0’, then for each Supplemental Channel included in this record, the mobile station shall set $CCSH\_ENCODER\_TYPE_S[FOR\_SCH\_ID_r][SCCL\_INDEX_r][i]$ to ‘0’ (default Turbo Encoder type).

◊ The mobile station shall delete all pilots that are not included in the list specified by the NUM_PILOTS field from the Active Set of Supplemental Channel for the corresponding $SCCL\_INDEX_r$.

+ If CCSH_INCLUDED is equal to ‘1’, the mobile station shall perform the following:

  o If $CCSH\_ENCODER\_ACTION\_TIME_r$ is received, then the mobile station shall set $CCSH\_ENCODER\_ACTION\_TIME_S$ to $CCSH\_ENCODER\_ACTION\_TIME_r$, and the mobile station shall apply each $CCSH\_ENCODER\_TYPE_S$ at the time specified by $CCSH\_ENCODER\_ACTION\_TIME_r$.

  o If $CCSH\_ENCODER\_ACTION\_TIME_r$ is not received, the mobile station shall apply each $CCSH\_ENCODER\_TYPE_S$ at the action time of the message.

+ If $3X\_FCH\_INFO\_INCL_r$ equals ‘1’, for each included member of the Active Set, the mobile station store the following:

  o If $3X\_FCH\_LOW\_INCL_r$ equals ‘1’, set the QOF_MASK_ID_FCH_LOW field to $QOF\_MASK\_ID\_FCH\_LOW_r$ and the CODE_CHAN_FCH_LOW field to $CODE\_CHAN\_FCH\_LOW_r$. Otherwise, set the QOF_MASK_ID_FCH_LOW field to $QOF\_MASK\_ID\_FCH_r$ and the CODE_CHAN_FCH_LOW to $CODE\_CHAN\_FCH_r$.

  o If $3X\_FCH\_HIGH\_INCL_r$ equals ‘1’, set the QOF_MASK_ID_FCH_HIGH field to $QOF\_MASK\_ID\_FCH\_HIGH_r$ and the CODE_CHAN_FCH_HIGH field to $CODE\_CHAN\_FCH\_HIGH_r$. Otherwise, set the QOF_MASK_ID_FCH_HIGH field to $QOF\_MASK\_ID\_FCH_r$ and the CODE_CHAN_FCH_HIGH to $CODE\_CHAN\_FCH_r$.

  o If $3X\_SCH\_INFO\_INCL_r$ equals ‘1’, for each Supplemental Channel included, the mobile station store the following:

◊ If $3X\_SCH\_LOW\_INCL_r$ equals '1', set the $QOF\_ID\_SCH\_LOW_s$ $[FOR\_SCH\_ID_r][SCCL\_INDEX_r][i]$ to $QOF\_MASK\_ID\_SCH\_LOW_r$ and the $FOR\_SCH\_CC\_INDEX\_LOW[FOR\_SCH\_ID_r][SCCL\_INDEX_r][i]$ field to $CODE\_CHAN\_SCH\_LOW_r$. Otherwise, set $QOF\_ID\_SCH\_LOW_s[FOR\_SCH\_ID_r][SCCL\_INDEX_r][i]$ to $QOF\_MASK\_ID\_SCH_r$, and $FOR\_SCH\_CC\_INDEX\_LOW_s[FOR\_SCH\_ID_r][SCCL\_INDEX_r][i]$ to $CODE\_CHAN\_SCH_r$.

◊ If $3X\_SCH\_HIGH\_INCL_r$ equals '1', set the $QOF\_ID\_SCH\_HIGH_s$ $[FOR\_SCH\_ID_r][SCCL\_INDEX_r][i]$ to $QOF\_MASK\_ID\_SCH\_HIGH_r$ and the $FOR\_SCH\_CC\_INDEX\_HIGH[FOR\_SCH\_ID_r][SCCL\_INDEX_r][i]$ field to $CODE\_CHAN\_SCH\_HIGH_r$. Otherwise, set $QOF\_ID\_SCH\_HIGH_s[FOR\_SCH\_ID_r][SCCL\_INDEX_r][i]$ to $QOF\_MASK\_ID\_SCH_r$, and $FOR\_SCH\_CC\_INDEX\_HIGH_s[FOR\_SCH\_ID_r][SCCL\_INDEX_r][i]$ to $CODE\_CHAN\_SCH_r$.

+ The mobile station shall delete all pilots that are not listed in the NUM_PILOTS field from the Active Set.

+ The mobile station shall delete all pilots that are not listed in the Active Set from the Active Set of the Supplemental Channel for the Forward Supplemental Channel Assignment (if any). If these deleted pilots include all pilots in the Active Set of the Supplemental Channel, the mobile station shall cancel the Forward Supplemental Channel Assignment.

– If CH_IND_r is equal to '010' or '110', the mobile station shall perform the following:

+ The mobile station shall set CH_IND_s = '10'.

+ If SCH_INCL_r is equal to '1' and NUM_FOR_SCH is not equal to '00000', for all the NUM_FOR_SCH occurrences, the mobile station shall perform the following:

o The mobile station shall determine, $N\_FSCH\_BITS\_SET_s[FOR\_SCH\_ID_r][SCCL\_INDEX_r]$, the number of information bits per Forward Supplemental Channel frame identified by FOR_SCH_ID and corresponding to the index SCCL_INDEX according to the following rules:

◊ If $FSCH\_VAR\_TABLE\_ID_s[FOR\_SCH\_ID_r]$ is equal to '000', then:

– If $USE\_FLEX\_NUM\_BITS_s$ is equal to '0' or if $USE\_FLEX\_NUM\_BITS_s$ is equal to '1' and $FSCH\_NBIT\_TABLE\_ID_s[FOR\_SCH\_ID_r]$ is equal to '0000', then the mobile station shall set the number of information bits per frame, $N\_FSCH\_BITS\_SET_s[FOR\_SCH\_ID_r][SCCL\_INDEX_r]$ and number of CRC bits per frame, $FSCH\_CRC\_LEN\_SET_s[FOR\_SCH\_ID_r][SCCL\_INDEX_r]$, according to Table 3.7.3.3.2.37-2 using $FOR\_SCH\_NUM\_BITS\_IDX_r$ as the index to the table.

– If $USE\_FLEX\_NUM\_BITS_s$ is equal to '1' and $FSCH\_NBIT\_TABLE\_ID_s[FOR\_SCH\_ID_r]$ is not equal to '0000', then the mobile station shall set the number of CRC bits per frame, $FSCH\_CRC\_LEN\_SET_s[FOR\_SCH\_ID_r][SCCL\_INDEX_r]$, using Table 3.7.5.20-1 and $CRC\_LEN\_IDX_s[FSCH\_NBIT\_TABLE\_ID_s[FOR\_SCH\_ID_r]][FOR\_SCH\_NUM\_BITS\_IDX_r]$ as the index to the table. The mobile station shall also set the number of information bits per frame corresponding to $SCCL\_INDEX_r$, $N\_FSCH\_BITS\_SET_s[FOR\_SCH\_ID_r][SCCL\_INDEX_r]$, to $NUM\_BITS_s[FSCH\_NBIT\_TABLE\_ID_s[FOR\_SCH\_ID_r]][FOR\_SCH\_NUM\_BITS\_IDX_r]$.

◊ If $FSCH\_VAR\_TABLE\_ID_s[FOR\_SCH\_ID_r]$ is not equal to '000', then:

– The mobile station shall set $N\_FSCH\_BITS\_IDX\_SET_s[FOR\_SCH\_ID_r]$, the set of indices to the number of information bits per frame as follows:

+ If $FOR\_SCH\_NUM\_BITS\_IDX_r$ is equal to '0000', then $N\_FSCH\_BITS\_IDX\_SET_s[FOR\_SCH\_ID_r]$ = **{** $FOR\_SCH\_NUM\_BITS\_IDX_r$ **},**

+ otherwise the mobile station shall set (initialize) $N\_FSCH\_BITS\_IDX\_SET_s[FOR\_SCH\_ID_r]$ = **{**$FOR\_SCH\_NUM\_BITS\_IDX_r$**}** and for i=1, …, $FOR\_SCH\_NUM\_BITS\_IDX_r$ the mobile station shall add $FOR\_SCH\_NUM\_BITS\_IDX_r$ - $VAR\_FSCH\_RATE\_OFFSET_s[FOR\_SCH\_ID_r][FOR\_SCH\_NUM\_BITS\_IDX_r][i]$ to the set specified by $N\_FSCH\_BITS\_IDX\_SET_s[FOR\_SCH\_ID_r]$

- If $USE\_FLEX\_NUM\_BITS_s$ is equal to '0' or if $USE\_FLEX\_NUM\_BITS_s$ is equal to '1' and $FSCH\_NBIT\_TABLE\_ID_s[FOR\_SCH\_ID_r]$ is equal to '0000', then the mobile station shall set $N\_FSCH\_BITS\_SET_s[FOR\_SCH\_ID_r][SCCL\_INDEX_r]$, the set of number of information bits per frame as follows. The ith member of the set $N\_FSCH\_BITS\_SET_s[FOR\_SCH\_ID_r][SCCL\_INDEX_r]$ is obtained using Table 3.7.3.3.2.37-2 and the ith member of the set $N\_FSCH\_BITS\_IDX\_SET_s[FOR\_SCH\_ID_r]$ as the index to the table.
- If $USE\_FLEX\_NUM\_BITS_s$ is equal to '1' and $FSCH\_NBIT\_TABLE\_ID_s[FOR\_SCH\_ID_r]$ is not equal to '0000', then
  + the mobile station shall set $N\_FSCH\_BITS\_SET_s[FOR\_SCH\_ID_r][SCCL\_INDEX_r]$, the set of number of information bits per frame as follows. The ith member of the set $N\_FSCH\_BITS\_SET_s[FOR\_SCH\_ID_r][SCCL\_INDEX_r]$ is equal to $NUM\_BITS_s[FSCH\_NBIT\_TABLE\_ID_s[FOR\_SCH\_ID_r]][N\_FSCH\_BITS\_IDX\_SET_s[FOR\_SCH\_ID_r][i]]$, where $N\_FSCH\_BITS\_IDX\_SET_s[FOR\_SCH\_ID_r][i]$ denotes the ith member of the set $N\_FSCH\_BITS\_IDX\_SET_s[FOR\_SCH\_ID_r]$ and,
  + the mobile station shall set $FSCH\_CRC\_LEN\_SET_s[FOR\_SCH\_ID_r][SCCL\_INDEX_r]$, the set of number CRC bits per frame as follows. The ith member of the set $FSCH\_CRC\_LEN\_SET_s[FOR\_SCH\_ID_r][SCCL\_INDEX_r]$ using Table 3.7.5.20-1 and $CRC\_LEN\_IDX_s[FSCH\_NBIT\_TABLE\_ID_s[FOR\_SCH\_ID_r]][N\_FSCH\_BITS\_IDX\_SET_s[FOR\_SCH\_ID_r][i]]$ as the index to the table, where $N\_FSCH\_BITS\_IDX\_SET_s[FOR\_SCH\_ID_r][i]$ denotes the ith member of the set $N\_FSCH\_BITS\_IDX\_SET_s[FOR\_SCH\_ID_r]$.

+ If SCH_INCL_r is equal to '1' and NUM_REV_SCH is not equal to '00000', for all the NUM_REV_SCH occurrences, the mobile station shall perform the following:
  - Set $REV\_SCH\_NUM\_BITS\_IDX_s[REV\_SCH\_ID_r]$ to $REV\_SCH\_NUM\_BITS\_IDX_r$.

- o Set $REV\_WALSH\_ID_s$ $[REV\_SCH\_ID_r][REV\_SCH\_NUM\_BITS\_IDX_s]$ to $REV\_WALSH\_ID_r$.

+ For each member of the Active Set included in the message, the mobile station shall perform the followings:
  - o Set PILOT_PN to $PILOT\_PN_r$.
  - o If $SRCH\_OFFSET\_INCL_r$ equals '1', set the SRCH_OFFSET field of PILOT_REC to $SRCH\_OFFSET_r$; otherwise, set the SRCH_OFFSET field of PILOT_REC to '000'.
  - o Set ADD_PILOT_REC_INCL to $ADD\_PILOT\_REC\_INCL_r$.
  - o If $ADD\_PILOT\_REC\_INCL_r$ equals '1', the mobile station shall also perform the following:
    - ◊ Set the PILOT_REC_TYPE field of PILOT_REC to $PILOT\_REC\_TYPE_r$.
    - ◊ If $PILOT\_REC\_TYPE_r$ is equal to '000', the mobile station shall set the TD_POWER_LEVEL field of PILOT_REC to $TD\_POWER\_LEVEL_r$ and set the TD_MODE field of PILOT_REC to TD_MODE_r.
    - ◊ If $PILOT\_REC\_TYPE_r$ is equal to '001', the mobile station shall:
      - – Set the AUX_PILOT_QOF field of PILOT_REC to QOF_r.
      - – Set the AUX_PILOT_WALSH_CODE field of PILOT_REC to $AUX\_PILOT\_WALSH_r$ with the Walsh Code length specified by $WALSH\_LENGTH_r$.
    - ◊ If $PILOT\_REC\_TYPE_r$ is equal to '010', the mobile station shall:
      - – Set the AUX_PILOT_TD_QOF field of PILOT_REC to QOF_r.
      - – Set the AUX_PILOT_WALSH_CODE field of PILOT_REC to AUX_WALSH_r with the Walsh Code length specified by $WALSH\_LENGTH_r$.
      - – Set the AUX_TD_POWER_LEVEL field of PILOT_REC to $AUX\_TD\_POWER\_LEVEL_r$.
      - – Set the TD_MODE field of PILOT_REC to TD_MODE_r.
    - ◊ If $PILOT\_REC\_TYPE_r$ is equal to '011', the mobile station shall:
      - – Set the SR3_PRIMARY_PILOT field of PILOT_REC to $SR3\_PRIMARY\_PILOT_r$.
      - – Set the SR3_PILOT_POWER1 field of PILOT_REC to $SR3\_PILOT\_POWER1_r$.

– Set the SR3_PILOT_POWER2 field of PILOT_REC to $SR3\_PILOT\_POWER2_r$.

◊ If $PILOT\_REC\_TYPE_r$ is equal to '100', the mobile station shall:

– Set the SR3_PRIMARY_PILOT field of PILOT_REC to $SR3\_PRIMARY\_PILOT_r$.

– Set the SR3_PILOT_POWER1 field of PILOT_REC to $SR3\_PILOT\_POWER1_r$.

– Set the SR3_PILOT_POWER2 field of PILOT_REC to $SR3\_PILOT\_POWER2_r$.

– Set the AUX_PILOT_QOF field of PILOT_REC to QOF_r.

– Set the AUX_PILOT_WALSH_CODE field of PILOT_REC to $AUX\_PILOT\_WALSH_r$ with the Walsh Code length specified by $WALSH\_LENGTH_r$.

– If $ADD\_INFO\_INCL1_r$ is equal to '1', set the AUX_PILOT_QOF1 field of PILOT_REC to $QOF1_r$ and set the AUX_PILOT_WALSH_CODE1 field of PILOT_REC to $AUX\_PILOT\_WALSH1_r$ with the Walsh Code length specified by $WALSH\_LENGTH1_r$; otherwise, set the AUX_PILOT_QOF1 field of PILOT_REC to QOF_r and set the AUX_PILOT_WALSH_CODE1 field of PILOT_REC to $AUX\_PILOT\_WALSH_r$ with the Walsh Code length specified by $WALSH\_LENGTH_r$.

– If $ADD\_INFO\_INCL2_r$ is equal to '1', set the AUX_PILOT_QOF2 field of PILOT_REC to $QOF2_r$ and set the AUX_PILOT_WALSH_CODE2 field of PILOT_REC to $AUX\_PILOT\_WALSH2_r$ with the Walsh Code length specified by $WALSH\_LENGTH2_r$; otherwise, set the AUX_PILOT_QOF2 field of PILOT_REC to QOF_r and set the AUX_PILOT_WALSH_CODE2 field of PILOT_REC to $AUX\_PILOT\_WALSH_r$ with the Walsh Code length specified by $WALSH\_LENGTH_r$.

o Store PWR_COMB_IND, CODE_CHAN_DCCH and QOF_MASK_ID_DCCH.

o If SCH_INCL_r is equal to '1' and NUM_SCH is equal to '00000', the mobile station shall delete the corresponding pilot from all entries of the corresponding Supplemental Channel.

o If SCH_INCL_r is equal to '1' and NUM_SCH is not equal to '00000', the mobile station shall:

◊ If PILOT_INCL is equal to ‘0’, then the mobile station shall delete the corresponding pilot from the Active Set of Supplemental Channel for the corresponding $SCCL\_INDEX_r$.

◊ If PILOT_INCL is equal to ‘1’, then for each Supplemental Channel included in this record, the mobile station shall set $PILOT\_PN_s$ $[FOR\_SCH\_ID_r][SCCL\_INDEX_s][i]$ to $PILOT\_PN_r$, $QOF\_ID_s[FOR\_SCH\_ID_r][SCCL\_INDEX_s][i]$ to $QOF\_MASK\_ID\_SCH_r$, and $FOR\_SCH\_CC\_INDEX_s$ $[FOR\_SCH\_ID_s][SCCL\_INDEX_s][i]$ to $CODE\_CHAN\_SCH_r$.

◊ If PILOT_INCL is equal to ‘1’ and CCSH_INCLUDED is set to ‘1’, then for each Supplemental Channel included in this record, the mobile station shall set $CCSH\_ENCODER\_TYPE_s[FOR\_SCH\_ID_r][SCCL\_INDEX_r][i]$ to $CCSH\_ENCODER\_TYPE_r$.

◊ If PILOT_INCL is equal to ‘1’ and CCSH_INCLUDED is set to ‘0’, then for each Supplemental Channel included in this record, the mobile station shall set $CCSH\_ENCODER\_TYPE_s[FOR\_SCH\_ID_r][SCCL\_INDEX_r][i]$ to ‘0’ (default Turbo Encoder type).

◊ The mobile station shall delete all pilots that are not included in the list specified by the NUM_PILOTS field from the Active Set of Supplemental Channel for the corresponding $SCCL\_INDEX_r$.

+ If CCSH_INCLUDED is equal to ‘1’, the mobile station shall perform the following:

  o If $CCSH\_ENCODER\_ACTION\_TIME_r$ is received, then the mobile station shall set $CCSH\_ENCODER\_ACTION\_TIME_s$ to $CCSH\_ENCODER\_ACTION\_TIME_r$, and the mobile station shall apply each $CCSH\_ENCODER\_TYPE_s$ at the time specified by $CCSH\_ENCODER\_ACTION\_TIME_r$.

  o If $CCSH\_ENCODER\_ACTION\_TIME_r$ is not received, the mobile station shall apply each $CCSH\_ENCODER\_TYPE_s$ at the action time of the message.

+ If $3X\_DCCH\_INFO\_INCL_r$ equals ‘1’, for each included member of the Active Set, the mobile station store the following:

  o If $3X\_DCCH\_LOW\_INCL_r$ equals ‘1’, set the QOF_MASK_ID_DCCH_LOW field to $QOF\_MASK\_ID\_DCCH\_LOW_r$ and the CODE_CHAN_DCCH_LOW field to $CODE\_CHAN\_DCCH\_LOW_r$. Otherwise, set the QOF_MASK_ID_DCCH_LOW field to $QOF\_MASK\_ID\_FCH_r$ and the CODE_CHAN_DCCH_LOW to $CODE\_CHAN\_FCH_r$.

- o If $3X\_DCCH\_HIGH\_INCL_r$ equals '1', set the $QOF\_MASK\_ID\_DCCH\_HIGH$ field to $QOF\_MASK\_ID\_DCCH\_HIGH_r$ and the $CODE\_CHAN\_DCCH\_HIGH$ field to $CODE\_CHAN\_DCCH\_HIGH_r$. Otherwise, set the $QOF\_MASK\_ID\_DCCH\_HIGH$ field to $QOF\_MASK\_ID\_FCH_r$ and the $CODE\_CHAN\_DCCH\_HIGH$ to $CODE\_CHAN\_FCH_r$.
- o If $3X\_SCH\_INFO\_INCL_r$ equals '1', for each Supplemental Channel included, the mobile station store the following:
  - ◊ If $3X\_SCH\_LOW\_INCL_r$ equals '1', set $QOF\_ID\_SCH\_LOW[FOR\_SCH\_ID_r][SCCL\_INDEX_r][i]$ to $QOF\_MASK\_ID\_SCH\_LOW_r$ and $FOR\_SCH\_CC\_INDEX\_LOW[FOR\_SCH\_ID_r][SCCL\_INDEX_r][i]$ field to $CODE\_CHAN\_SCH\_LOW_r$. Otherwise, set $QOF\_ID\_SCH\_LOW[FOR\_SCH\_ID_r][SCCL\_INDEX_r][i]$ to $QOF\_MASK\_ID\_SCH_r$, and $FOR\_SCH\_CC\_INDEX\_LOW[FOR\_SCH\_ID_r][SCCL\_INDEX_r][i]$ to $CODE\_CHAN\_SCH_r$.
  - ◊ If $3X\_SCH\_HIGH\_INCL_r$ equals '1', set $QOF\_ID\_SCH\_HIGH[FOR\_SCH\_ID_r][SCCL\_INDEX_r][i]$ to $QOF\_MASK\_ID\_SCH\_HIGH_r$ and the $FOR\_SCH\_CC\_INDEX\_HIGH[FOR\_SCH\_ID_r][SCCL\_INDEX_r][i]$ field to $CODE\_CHAN\_SCH\_HIGH_r$. Otherwise, set $QOF\_ID\_SCH\_HIGH[FOR\_SCH\_ID_r][SCCL\_INDEX_r][i]$ to $QOF\_MASK\_ID\_SCH_r$, and $FOR\_SCH\_CC\_INDEX\_HIGH[FOR\_SCH\_ID_r][SCCL\_INDEX_r][i]$ to $CODE\_CHAN\_SCH_r$.

+ The mobile station shall set $FUNDICATED\_BCMC\_IND_s$ to $FUNDICATED\_BCMC\_IND_r$.

+ If $FUNDICATED\_BCMC\_IND_r$ equals '1', for each included member of the Active Set, the mobile station shall store the following:
  - o Set $FOR\_CPCCH\_WALSH_s$ to $FOR\_CPCCH\_WALSH_r$.
  - o Set FOR_CPCSCH_s to FOR_CPCSCH_r.

+ The mobile station shall delete all pilots that are not listed in the NUM_PILOTS field from the Active Set.

+ The mobile station shall delete all pilots that are not listed in the Active Set from the Active Set of the Supplemental Channel for the Forward Supplemental Channel Assignment (if any). If these deleted pilots include all pilots in the Active Set of the Supplemental Channel, the mobile station shall cancel the Forward Supplemental Channel Assignment.

- If CH_IND_r is equal to ‘111’, the mobile station shall perform the following:
  - The mobile station shall set CH_IND_s = ‘11’.
  - If SCH_INCL_r is equal to ‘1’ and NUM_FOR_SCH is not equal to ‘00000’, for all the NUM_FOR_SCH occurrences, the mobile station shall perform the following:
    - The mobile station shall determine, $N\_FSCH\_BITS\_SET_s[FOR\_SCH\_ID_r][SCCL\_INDEX_r]$, the number of information bits per Forward Supplemental Channel frame identified by FOR_SCH_ID and corresponding to the index SCCL_INDEX according to the following rules:
      - If $FSCH\_VAR\_TABLE\_ID_s[FOR\_SCH\_ID_r]$ is equal to ‘000’, then:
        - If $USE\_FLEX\_NUM\_BITS_s$ is equal to '0' or if $USE\_FLEX\_NUM\_BITS_s$ is equal to '1' and $FSCH\_NBIT\_TABLE\_ID_s[FOR\_SCH\_ID_r]$ is equal to ‘0000’, then the mobile station shall set the number of information bits per frame, $N\_FSCH\_BITS\_SET_s[FOR\_SCH\_ID_r][SCCL\_INDEX_r]$ and number of CRC bits per frame, $FSCH\_CRC\_LEN\_SET_s[FOR\_SCH\_ID_r][SCCL\_INDEX_r]$, according to Table 3.7.3.3.2.37-2 using $FOR\_SCH\_NUM\_BITS\_IDX_r$ as the index to the table.
        - If $USE\_FLEX\_NUM\_BITS_s$ is equal to '1' and $FSCH\_NBIT\_TABLE\_ID_s[FOR\_SCH\_ID_r]$ is not equal to ‘0000’, then the mobile station shall set the number of CRC bits per frame, $FSCH\_CRC\_LEN\_SET_s[FOR\_SCH\_ID_r][SCCL\_INDEX_r]$, using Table 3.7.5.20-1 and $CRC\_LEN\_IDX_s[FSCH\_NBIT\_TABLE\_ID_s[FOR\_SCH\_ID_r]][FOR\_SCH\_NUM\_BITS\_IDX_r]$ as the index to the table.

          The mobile station shall also set the number of information bits per frame corresponding to $SCCL\_INDEX_r$, $N\_FSCH\_BITS\_SET_s[FOR\_SCH\_ID_r][SCCL\_INDEX_r]$, to $NUM\_BITS_s[FSCH\_NBIT\_TABLE\_ID_s[FOR\_SCH\_ID_r]][FOR\_SCH\_NUM\_BITS\_IDX_r]$.
      - If If $FSCH\_VAR\_TABLE\_ID_s[FOR\_SCH\_ID_r]$ is not equal to ‘000’, then:

- The mobile station shall set $N\_FSCH\_BITS\_IDX\_SET_s[FOR\_SCH\_ID_r]$, the set of indices to the number of information bits per frame as follows:
  - If $FOR\_SCH\_NUM\_BITS\_IDX_r$ is equal to '0000', then $N\_FSCH\_BITS\_IDX\_SET_s[FOR\_SCH\_ID_r]$ = **{** $FOR\_SCH\_NUM\_BITS\_IDX_r$ **},**
  - otherwise the mobile station shall set (initialize) $N\_FSCH\_BITS\_IDX\_SET_s[FOR\_SCH\_ID_r]$ = **{**$FOR\_SCH\_NUM\_BITS\_IDX_r$**}** and for i=1, ..., $FOR\_SCH\_NUM\_BITS\_IDX_r$ the mobile station shall add $FOR\_SCH\_NUM\_BITS\_IDX_r$ - $VAR\_FSCH\_RATE\_OFFSET_s[FOR\_SCH\_ID_r][FOR\_SCH\_NUM\_BITS\_IDX_r][i]$ to the set specified by $N\_FSCH\_BITS\_IDX\_SET_s[FOR\_SCH\_ID_r]$
- If $USE\_FLEX\_NUM\_BITS_s$ is equal to '0' or if $USE\_FLEX\_NUM\_BITS_s$ is equal to '1' and $FSCH\_NBIT\_TABLE\_ID_s[FOR\_SCH\_ID_r]$ is equal to '0000', then the mobile station shall set $N\_FSCH\_BITS\_SET_s[FOR\_SCH\_ID_r][SCCL\_INDEX_r]$, the set of number of information bits per frame as follows. The ith member of the set $N\_FSCH\_BITS\_SET_s[FOR\_SCH\_ID_r][SCCL\_INDEX_r]$ is obtained using Table 3.7.3.3.2.37-2 and the ith member of the set $N\_FSCH\_BITS\_IDX\_SET_s[FOR\_SCH\_ID_r]$ as the index to the table.
- If $USE\_FLEX\_NUM\_BITS_s$ is equal to '1' and $FSCH\_NBIT\_TABLE\_ID_s[FOR\_SCH\_ID_r]$ is not equal to '0000', then
  - the mobile station shall set $N\_FSCH\_BITS\_SET_s[FOR\_SCH\_ID_r][SCCL\_INDEX_r]$, the set of number of information bits per frame as follows.
    The ith member of the set $N\_FSCH\_BITS\_SET_s[FOR\_SCH\_ID_r][SCCL\_INDEX_r]$ is equal to $NUM\_BITS_s[FSCH\_NBIT\_TABLE\_ID_s[FOR\_SCH\_ID_r]][N\_FSCH\_BITS\_IDX\_SET_s[FOR\_SCH\_ID_r][i]]$, where $N\_FSCH\_BITS\_IDX\_SET_s[FOR\_SCH\_ID_r][i]$ denotes the ith member of the set $N\_FSCH\_BITS\_IDX\_SET_s[FOR\_SCH\_ID_r]$ and,

- the mobile station shall set $FSCH\_CRC\_LEN\_SET_s[FOR\_SCH\_ID_r][SCCL\_INDEX_r]$, the set of number CRC bits per frame as follows. The ith member of the set $FSCH\_CRC\_LEN\_SET_s[FOR\_SCH\_ID_r][SCCL\_INDEX_r]$ using Table 3.7.5.20-1 and $CRC\_LEN\_IDX_s[FSCH\_NBIT\_TABLE\_ID_s[FOR\_SCH\_ID_r]][N\_FSCH\_BITS\_IDX\_SET_s[FOR\_SCH\_ID_r][i]]$ as the index to the table, where $N\_FSCH\_BITS\_IDX\_SET_s[FOR\_SCH\_ID_r][i]$ denotes the ith member of the set $N\_FSCH\_BITS\_IDX\_SET_s[FOR\_SCH\_ID_r]$.

- If SCH_INCL_r is equal to '1' and NUM_REV_SCH is not equal to '00000', for all the NUM_REV_SCH occurrences, the mobile station shall perform the following:
  - Set $REV\_SCH\_NUM\_BITS\_IDX_s[REV\_SCH\_ID_r]$ to $REV\_SCH\_NUM\_BITS\_IDX_r$.
  - Set $REV\_WALSH\_ID_s[REV\_SCH\_ID_r][REV\_SCH\_NUM\_BITS\_IDX_s]$ to $REV\_WALSH\_ID_r$.
- For each member in the Active Set included in the message, the mobile station shall perform the followings:
  - Set PILOT_PN to $PILOT\_PN_r$.
  - If $SRCH\_OFFSET\_INCL_r$ equals '1', set the SRCH_OFFSET field of PILOT_REC to $SRCH\_OFFSET_r$; otherwise, set the SRCH_OFFSET field of PILOT_REC to '000'.
  - Set ADD_PILOT_REC_INCL to $ADD\_PILOT\_REC\_INCL_r$.
  - If $ADD\_PILOT\_REC\_INCL_r$ equals '1', the mobile station shall also perform the following:
    - Set the PILOT_REC_TYPE field of PILOT_REC to $PILOT\_REC\_TYPE_r$.
    - If $PILOT\_REC\_TYPE_r$ is equal to '000', the mobile station shall set the TD_POWER_LEVEL field of PILOT_REC to $TD\_POWER\_LEVEL_r$ and set the TD_MODE field of PILOT_REC to TD_MODE_r.
    - If $PILOT\_REC\_TYPE_r$ is equal to '001', the mobile station shall:
      - Set the AUX_PILOT_QOF field of PILOT_REC to QOF_r.
      - Set the AUX_PILOT_WALSH_CODE field of PILOT_REC to $AUX\_PILOT\_WALSH_r$ with the Walsh Code length specified by $WALSH\_LENGTH_r$.

◊ If $PILOT\_REC\_TYPE_r$ is equal to '010', the mobile station shall:

– Set the AUX_PILOT_TD_QOF field of PILOT_REC to QOF_r.

– Set the AUX_PILOT_WALSH_CODE field of PILOT_REC to AUX_WALSH_r with the Walsh Code length specified by $WALSH\_LENGTH_r$.

– Set the AUX_TD_POWER_LEVEL field of PILOT_REC to $AUX\_TD\_POWER\_LEVEL_r$.

– Set the TD_MODE field of PILOT_REC to TD_MODE_r.

◊ If $PILOT\_REC\_TYPE_r$ is equal to '011', the mobile station shall:

– Set the SR3_PRIMARY_PILOT field of PILOT_REC to $SR3\_PRIMARY\_PILOT_r$.

– Set the SR3_PILOT_POWER1 field of PILOT_REC to $SR3\_PILOT\_POWER1_r$.

– Set the SR3_PILOT_POWER2 field of PILOT_REC to $SR3\_PILOT\_POWER2_r$.

◊ If $PILOT\_REC\_TYPE_r$ is equal to '100', the mobile station shall:

– Set the SR3_PRIMARY_PILOT field of PILOT_REC to $SR3\_PRIMARY\_PILOT_r$.

– Set the SR3_PILOT_POWER1 field of PILOT_REC to $SR3\_PILOT\_POWER1_r$.

– Set the SR3_PILOT_POWER2 field of PILOT_REC to $SR3\_PILOT\_POWER2_r$.

– Set the AUX_PILOT_QOF field of PILOT_REC to QOF_r.

– Set the AUX_PILOT_WALSH_CODE field of PILOT_REC to $AUX\_PILOT\_WALSH_r$ with the Walsh Code length specified by $WALSH\_LENGTH_r$.

– If $ADD\_INFO\_INCL1_r$ is equal to '1', set the AUX_PILOT_QOF1 field of PILOT_REC to $QOF1_r$ and set the AUX_PILOT_WALSH_CODE1 field of PILOT_REC to $AUX\_PILOT\_WALSH1_r$ with the Walsh Code length specified by $WALSH\_LENGTH1_r$; otherwise, set the AUX_PILOT_QOF1 field of PILOT_REC to QOF_r and set the AUX_PILOT_WALSH_CODE1 field of PILOT_REC to $AUX\_PILOT\_WALSH_r$ with the Walsh Code length specified by $WALSH\_LENGTH_r$.

– If $ADD\_INFO\_INCL2_r$ is equal to '1', set the AUX_PILOT_QOF2 field of PILOT_REC to $QOF2_r$ and set the AUX_PILOT_WALSH_CODE2 field of PILOT_REC to $AUX\_PILOT\_WALSH2_r$ with the Walsh Code length specified by $WALSH\_LENGTH2_r$; otherwise, set the AUX_PILOT_QOF2 field of PILOT_REC to QOF_r and set the AUX_PILOT_WALSH_CODE2 field of PILOT_REC to $AUX\_PILOT\_WALSH_r$ with the Walsh Code length specified by $WALSH\_LENGTH_r$.

o Store PWR_COMB_IND, CODE_CHAN_FCH, QOF_MASK_ID_FCH, CODE_CHAN_DCCH and QOF_MASK_ID_DCCH.

o If SCH_INCL_r is equal to '1' and NUM_SCH is equal to '00000', the mobile station shall delete the corresponding pilot from all entries of the corresponding Supplemental Channel.

o If SCH_INCL_r is equal to '1' and NUM_SCH is not equal to '00000', the mobile station shall:

◊ If PILOT_INCL is equal to '0', then the mobile station shall delete the corresponding pilot from the Active Set of Supplemental Channel for the corresponding $SCCL\_INDEX_r$.

◊ If PILOT_INCL is equal to '1', then for each Supplemental Channel included in this record, the mobile station shall set $PILOT\_PN_s$ $[FOR\_SCH\_ID_r][SCCL\_INDEX_r][i]$ to $PILOT\_PN_r$, $QOF\_ID_s[FOR\_SCH\_ID_r][SCCL\_INDEX_r][i]$ to $QOF\_MASK\_ID\_SCH_r$, and $FOR\_SCH\_CC\_INDEX_s$ $[FOR\_SCH\_ID_r][SCCL\_INDEX_r][i]$ to $CODE\_CHAN\_SCH_r$.

◊ If PILOT_INCL is equal to '1' and CCSH_INCLUDED is set to '1', then for each Supplemental Channel included in this record, the mobile station shall set $CCSH\_ENCODER\_TYPE_s[FOR\_SCH\_ID_r][SCCL\_INDEX_r][i]$ to $CCSH\_ENCODER\_TYPE_r$.

◊ If PILOT_INCL is equal to '1' and CCSH_INCLUDED is set to '0', then for each Supplemental Channel included in this record, the mobile station shall set $CCSH\_ENCODER\_TYPE_s[FOR\_SCH\_ID_r][SCCL\_INDEX_r][i]$ to '0' (default Turbo Encoder type).

◊ The mobile station shall delete all pilots that are not included in the list specified by the NUM_PILOTS field from the Active Set of Supplemental Channel for the corresponding $SCCL\_INDEX_r$.

+ If CCSH_INCLUDED is equal to '1', the mobile station shall perform the following:

- o If $CCSH\_ENCODER\_ACTION\_TIME_r$ is received, then the mobile station shall set $CCSH\_ENCODER\_ACTION\_TIME_s$ to $CCSH\_ENCODER\_ACTION\_TIME_r$, and the mobile station shall apply each $CCSH\_ENCODER\_TYPE_s$ at the time specified by $CCSH\_ENCODER\_ACTION\_TIME_r$.
- o If $CCSH\_ENCODER\_ACTION\_TIME_r$ is not received, the mobile station shall apply each $CCSH\_ENCODER\_TYPE_s$ at the action time of the message.

+ If $3X\_FCH\_INFO\_INCL_r$ equals '1', for each included member of the Active Set, the mobile station store the following:
  - o If $3X\_FCH\_LOW\_INCL_r$ equals '1', set the QOF_MASK_ID_FCH_LOW field to $QOF\_MASK\_ID\_FCH\_LOW_r$ and the CODE_CHAN_FCH_LOW field to $CODE\_CHAN\_FCH\_LOW_r$. Otherwise, set the QOF_MASK_ID_FCH_LOW field to $QOF\_MASK\_ID\_FCH_r$ and the CODE_CHAN_FCH_LOW to $CODE\_CHAN\_FCH_r$.
  - o If $3X\_FCH\_HIGH\_INCL_r$ equals '1', set the QOF_MASK_ID_FCH_HIGH field to $QOF\_MASK\_ID\_FCH\_HIGH_r$ and the CODE_CHAN_FCH_HIGH field to $CODE\_CHAN\_FCH\_HIGH_r$. Otherwise, set the QOF_MASK_ID_FCH_HIGH field to $QOF\_MASK\_ID\_FCH_r$ and the CODE_CHAN_FCH_HIGH to $CODE\_CHAN\_FCH_r$.

+ If $3X\_DCCH\_INFO\_INCL_r$ equals '1', for each included member of the Active Set, the mobile station store the following:
  - o If $3X\_DCCH\_LOW\_INCL_r$ equals '1', set the QOF_MASK_ID_DCCH_LOW field to $QOF\_MASK\_ID\_DCCH\_LOW_r$ and the CODE_CHAN_DCCH_LOW field to $CODE\_CHAN\_DCCH\_LOW_r$. Otherwise, set the QOF_MASK_ID_DCCH_LOW field to $QOF\_MASK\_ID\_FCH_r$ and the CODE_CHAN_DCCH_LOW to $CODE\_CHAN\_FCH_r$.
  - o If $3X\_DCCH\_HIGH\_INCL_r$ equals '1', set the QOF_MASK_ID_DCCH_HIGH field to $QOF\_MASK\_ID\_DCCH\_HIGH_r$ and the CODE_CHAN_DCCH_HIGH field to $CODE\_CHAN\_DCCH\_HIGH_r$. Otherwise, set the QOF_MASK_ID_DCCH_HIGH field to $QOF\_MASK\_ID\_FCH_r$ and the CODE_CHAN_DCCH_HIGH to $CODE\_CHAN\_FCH_r$.

+ If $3X\_FCH\_INFO\_INCL_r$ or $3X\_DCCH\_INFO\_INCL_r$ equals '1', for each included member of the Active Set, the mobile station store the following:
  - o If $3X\_SCH\_INFO\_INCL_r$ equals '1', for each Supplemental Channel included, the mobile station store the following:

◊ If $3X\_SCH\_LOW\_INCL_r$ equals '1', set $QOF\_ID\_SCH\_LOW[FOR\_SCH\_ID_r][SCCL\_INDEX_r][i]$ to $QOF\_MASK\_ID\_SCH\_LOW_r$ and the $FOR\_SCH\_CC\_INDEX\_LOW[FOR\_SCH\_ID_r][SCCL\_INDEX_r][i]$ field to $CODE\_CHAN\_SCH\_LOW_r$. Otherwise, set $QOF\_ID\_SCH\_LOW[FOR\_SCH\_ID_r][SCCL\_INDEX_r][i]$ to $QOF\_MASK\_ID\_SCH_r$, and $FOR\_SCH\_CC\_INDEX\_LOW[FOR\_SCH\_ID_r][SCCL\_INDEX_r][i]$ to $CODE\_CHAN\_SCH_r$.

◊ If $3X\_SCH\_HIGH\_INCL_r$ equals '1', set $QOF\_ID\_SCH\_HIGH[FOR\_SCH\_ID_r][SCCL\_INDEX_r][i]$ to $QOF\_MASK\_ID\_SCH\_HIGH_r$ and the $FOR\_SCH\_CC\_INDEX\_HIGH[FOR\_SCH\_ID_r][SCCL\_INDEX_r][i]$ field to $CODE\_CHAN\_SCH\_HIGH_r$. Otherwise, set $QOF\_ID\_SCH\_HIGH[FOR\_SCH\_ID_r][SCCL\_INDEX_r][i]$ to $QOF\_MASK\_ID\_SCH_r$, and $FOR\_SCH\_CC\_INDEX\_HIGH[FOR\_SCH\_ID_r][SCCL\_INDEX_r][i]$ to $CODE\_CHAN\_SCH_r$.

+ The mobile station shall set $FUNDICATED\_BCMC\_IND_s$ to $FUNDICATED\_BCMC\_IND_r$.

+ If $FUNDICATED\_BCMC\_IND_r$ equals '1', the mobile station shall store the following:

  o Set $REV\_FCH\_ASSIGNED_s$ to $REV\_FCH\_ASSIGNED_r$.

+ If $FUNDICATED\_BCMC\_IND_r$ equals '1', the mobile station shall set FCH_BCMC_IND to '1'; otherwise, the mobile station shall set FCH_BCMC_IND to '0'.

+ If $FUNDICATED\_BCMC\_IND_r$ equals '1'and $FOR\_CPCCH\_INFO\_INCL_r$ is included and is set to '1', for each included member of the Active Set, the mobile station shall store the following:

  o Set $FOR\_CPCCH\_WALSH_s$ to $FOR\_CPCCH\_WALSH_r$.

  o Set FOR_CPCSCH_s to FOR_CPCSCH_r.

+ If $FUNDICATED\_BCMC\_IND_r$ equals '1'and $ADD\_PLCM\_FOR\_FCH\_INCL_r$ is included and is set to '1', the mobile station shall store the following:

  o Set $ADD\_PLCM\_FOR\_FCH\_TYPE_s$ to $ADD\_PLCM\_FOR\_FCH\_TYPE_r$.

  o Set $ADD\_PLCM\_FOR\_FCH\_39_s$ to $ADD\_PLCM\_FOR\_FCH\_39_r$ if $ADD\_PLCM\_FOR\_FCH\_TYPE_r$ is equal to '1'.

+ The mobile station shall delete all pilots that are not listed in the NUM_PILOTS field from the Active Set.

+ The mobile station shall delete all pilots that are not listed in the Active Set from the Active Set of the Supplemental Channel for the Forward Supplemental Channel Assignment (if any). If these deleted pilots include all pilots in the Active Set of the Supplemental Channel, the mobile station shall cancel the Forward Supplemental Channel Assignment.

– If CH_IND_r is equal to '000', the mobile station shall perform the following:

+ If this message assigns a Forward Packet Data Channel or Reverse Packet Data Channel which was not assigned prior to the action time of this message, Layer 3 shall send SIG-HandoffPDCH.Indication (handoff_type = HANDOFF) to the MAC layer; otherwise, Layer 3 shall send SIG-HandoffPDCH.Indication (handoff_type = ASSIGN) to the MAC layer.

+ If the message includes a Reverse Packet Data Channel assignment, the mobile station shall cancel the Reverse Supplemental Channel assignment, if any, at the action time of the message.

+ The mobile station shall set CH_IND_s to '000'.

+ The mobile station shall set $EXT\_CH\_IND_s$ to $EXT\_CH\_IND_r$.

+ If $PDCH\_CONTROL\_HOLD_r$ is equal to '0' and PILOT_GATING_USE_RATE is equal to '1', the mobile station shall set PILOT_GATING_USE_RATE to '0' and shall start the continuous reverse pilot at the specified action time of the message and, if a F-PDCH is assigned, the mobile station shall start the continuous R-CQICH as defined in [3].

+ If $PDCH\_CONTROL\_HOLD_r$ is equal to '1', the mobile station may perform the following:

  o Set PILOT_GATING_USE_RATE equal to '1' and start the reverse pilot gating and Reverse CQI Channel gating at $PILOT\_GATING\_RATE_s$ at the action time of the message.

  o The mobile station shall cancel the forward and reverse supplemental channel assignment, if any.

+ The mobile station shall set $FULL\_CI\_FEEDBACK\_IND_s$ to $FULL\_CI\_FEEDBACK\_IND_r$.

- If $EXT\_CH\_IND_r$ equals ‘01000’, the mobile station shall set $FOR\_CPCCH\_RATE_s$ to $FOR\_CPCCH\_RATE_r$, and $FOR\_CPCCH\_UPDATE\_RATE_s$ to $FOR\_CPCCH\_UPDATE\_RATE_r$; otherwise, the mobile station shall set $FOR\_CPCCH\_RATE_s$ to ‘00’, and $FOR\_CPCCH\_UPDATE\_RATE_s$ to ‘00’.
- The mobile station shall set $REV\_CQICH\_FRAME\_OFFSET_s$ to $REV\_CQICH\_FRAME\_OFFSET_r$.
- The mobile station shall set $REV\_CQICH\_REPS_s$ to $REV\_CQICH\_REPS_r$.
- The mobile station shall set $REV\_ACKCH\_REPS_s$ to $REV\_ACKCH\_REPS_r$.
- If SCH_INCL_r is equal to ‘1’, and $EXT\_CH\_IND_r$ signals the allocation of a F-FCH or a F-DCCH, and NUM_FOR_SCH is not equal to ‘00000’, for all the NUM_FOR_SCH occurrences, the mobile station shall perform the following:
  - The mobile station shall determine, $N\_FSCH\_BITS\_SET_s[FOR\_SCH\_ID_r][SCCL\_INDEX_r]$, the number of information bits per Forward Supplemental Channel frame identified by FOR_SCH_ID and corresponding to the index SCCL_INDEX according to the following rules:
    - If $FSCH\_VAR\_TABLE\_ID_s[FOR\_SCH\_ID_r]$ is equal to ‘000’, then:
      - If $USE\_FLEX\_NUM\_BITS_s$ is equal to '0' or if $USE\_FLEX\_NUM\_BITS_s$ is equal to '1' and $FSCH\_NBIT\_TABLE\_ID_s[FOR\_SCH\_ID_r]$ is equal to ‘0000’, then the mobile station shall set the number of information bits per frame, $N\_FSCH\_BITS\_SET_s[FOR\_SCH\_ID_r][SCCL\_INDEX_r]$ and number of CRC bits per frame, $FSCH\_CRC\_LEN\_SET_s[FOR\_SCH\_ID_r][SCCL\_INDEX_r]$, according to Table 3.7.3.3.2.37-2 using $FOR\_SCH\_NUM\_BITS\_IDX_r$ as the index to the table.

– If $USE\_FLEX\_NUM\_BITS_s$ is equal to '1' and $FSCH\_NBIT\_TABLE\_ID_s[FOR\_SCH\_ID_r]$ is not equal to '0000', then the mobile station shall set the number of CRC bits per frame, $FSCH\_CRC\_LEN\_SET_s[FOR\_SCH\_ID_r][SCCL\_INDEX_r]$, using Table 3.7.5.20-1 and $CRC\_LEN\_IDX_s[FSCH\_NBIT\_TABLE\_ID_s[FOR\_SCH\_ID_r]][FOR\_SCH\_NUM\_BITS\_IDX_r]$ as the index to the table.

The mobile station shall also set the number of information bits per frame corresponding to $SCCL\_INDEX_r$, $N\_FSCH\_BITS\_SET_s[FOR\_SCH\_ID_r][SCCL\_INDEX_r]$, to $NUM\_BITS_s[FSCH\_NBIT\_TABLE\_ID_s[FOR\_SCH\_ID_r]][FOR\_SCH\_NUM\_BITS\_IDX_r]$.

◊ If $FSCH\_VAR\_TABLE\_ID_s[FOR\_SCH\_ID_r]$ is not equal to '000', then:

– The mobile station shall set $N\_FSCH\_BITS\_IDX\_SET_s[FOR\_SCH\_ID_r]$, the set of indices to the number of information bits per frame as follows:

+ If $FOR\_SCH\_NUM\_BITS\_IDX_r$ is equal to '0000', then $N\_FSCH\_BITS\_IDX\_SET_s[FOR\_SCH\_ID_r]$ = **{** $FOR\_SCH\_NUM\_BITS\_IDX_r$ **},**

+ otherwise, the mobile station shall set (initialize) $N\_FSCH\_BITS\_IDX\_SET_s[FOR\_SCH\_ID_r]$ = **{**$FOR\_SCH\_NUM\_BITS\_IDX_r$**}** and for i=1, …, $FOR\_SCH\_NUM\_BITS\_IDX_r$ the mobile station shall add $FOR\_SCH\_NUM\_BITS\_IDX_r$ - $VAR\_FSCH\_RATE\_OFFSET_s[FOR\_SCH\_ID_r][FOR\_SCH\_NUM\_BITS\_IDX_r][i]$ to the set specified by $N\_FSCH\_BITS\_IDX\_SET_s[FOR\_SCH\_ID_r]$

– If $USE\_FLEX\_NUM\_BITS_s$ is equal to '0' or if $USE\_FLEX\_NUM\_BITS_s$ is equal to '1' and $FSCH\_NBIT\_TABLE\_ID_s[FOR\_SCH\_ID_r]$ is equal to '0000', then the mobile station shall set $N\_FSCH\_BITS\_SET_s[FOR\_SCH\_ID_r][SCCL\_INDEX_r]$, the set of number of information bits per frame as follows. The ith member of the set $N\_FSCH\_BITS\_SET_s[FOR\_SCH\_ID_r][SCCL\_INDEX_r]$ is obtained using Table 3.7.3.3.2.37-2 and the ith member of the set $N\_FSCH\_BITS\_IDX\_SET_s[FOR\_SCH\_ID_r]$ as the index to the table.

- If $USE\_FLEX\_NUM\_BITS_s$ is equal to '1' and $FSCH\_NBIT\_TABLE\_ID_s[FOR\_SCH\_ID_r]$ is not equal to '0000', then
  - the mobile station shall set $N\_FSCH\_BITS\_SET_s[FOR\_SCH\_ID_r][SCCL\_INDEX_r]$, the set of number of information bits per frame as follows.
    The ith member of the set $N\_FSCH\_BITS\_SET_s[FOR\_SCH\_ID_r][SCCL\_INDEX_r]$ is equal to $NUM\_BITS_s[FSCH\_NBIT\_TABLE\_ID_s[FOR\_SCH\_ID_r]][N\_FSCH\_BITS\_IDX\_SET_s[FOR\_SCH\_ID_r][i]]$, where $N\_FSCH\_BITS\_IDX\_SET_s[FOR\_SCH\_ID_r][i]$ denotes the ith member of the set $N\_FSCH\_BITS\_IDX\_SET_s[FOR\_SCH\_ID_r]$ and,
  - the mobile station shall set $FSCH\_CRC\_LEN\_SET_s[FOR\_SCH\_ID_r][SCCL\_INDEX_r]$, the set of number CRC bits per frame as follows.
    The ith member of the set $FSCH\_CRC\_LEN\_SET_s[FOR\_SCH\_ID_r][SCCL\_INDEX_r]$ using Table 3.7.5.20-1 and $CRC\_LEN\_IDX_s[FSCH\_NBIT\_TABLE\_ID_s[FOR\_SCH\_ID_r]][N\_FSCH\_BITS\_IDX\_SET_s[FOR\_SCH\_ID_r][i]]$ as the index to the table, where $N\_FSCH\_BITS\_IDX\_SET_s[FOR\_SCH\_ID_r][i]$ denotes the ith member of the set $N\_FSCH\_BITS\_IDX\_SET_s[FOR\_SCH\_ID_r]$.

- If SCH_INCL_r is equal to '1' and NUM_REV_SCH is not equal to '00000', for all the NUM_REV_SCH occurrences, the mobile station shall perform the following:
  - Set $REV\_SCH\_NUM\_BITS\_IDX_s[REV\_SCH\_ID_r]$ to $REV\_SCH\_NUM\_BITS\_IDX_r$.
  - Set $REV\_WALSH\_ID_s[REV\_SCH\_ID_r][REV\_SCH\_NUM\_BITS\_IDX_s]$ to $REV\_WALSH\_ID_r$.
- If $FOR\_PDCH\_RLGAIN\_INCL_r$ is included and equal to '1', the mobile station shall set $RLGAIN\_ACKCH\_PILOT_s$ to $RLGAIN\_ACKCH\_PILOT_r$, and $RLGAIN\_CQICH\_PILOT_s$ to $RLGAIN\_CQICH\_PILOT_r$.
- If $FOR\_PDCH\_PARMS\_INCL_r$ is equal to '1', the mobile station shall set $NUM\_SOFT\_SWITCHING\_FRAMES_s$ to $NUM\_SOFT\_SWITCHING\_FRAMES_r + 1$, and $NUM\_SOFTER\_SWITCHING\_FRAMES_s$ to $NUM\_SOFTER\_SWITCHING\_FRAMES_r + 1$.

+ If $CHM\_SWITCHING\_PARMS\_INCL_r$ is included and equal to '1', the mobile station shall set $NUM\_SOFT\_SWITCHING\_FRAMES\_CHM_s$ to $NUM\_SOFT\_SWITCHING\_FRAMES\_CHM_r + 1$, and $NUM\_SOFTER\_SWITCHING\_FRAMES\_CHM_s$ to $NUM\_SOFTER\_SWITCHING\_FRAMES\_CHM_r + 1$.

+ If $CHM\_SWITCHING\_PARMS\_INCL_r$ is included and equal to '0', the mobile station shall set $NUM\_SOFT\_SWITCHING\_FRAMES\_CHM_s$ to $NUM\_SOFT\_SWITCHING\_FRAMES_r + 1$, and $NUM\_SOFTER\_SWITCHING\_FRAMES\_CHM_s$ to $NUM\_SOFTER\_SWITCHING\_FRAMES_r + 1$.

+ If $FOR\_PDCH\_PARMS\_INCL_r$ is equal to '1', the mobile station shall set $NUM\_SOFT\_SWITCHING\_SLOTS_s$ according to Table 3.7.2.3.2.21-9 based on the value of $NUM\_SOFT\_SWITCHING\_SLOTS_r$.

+ If $FOR\_PDCH\_PARMS\_INCL_r$ is equal to '1', the mobile station shall set $NUM\_SOFTER\_SWITCHING\_SLOTS_s$ according to Table 3.7.2.3.2.21-9 based on the value of $NUM\_SOFTER\_SWITCHING\_SLOTS_r$.

+ If $CHM\_SWITCHING\_PARMS\_INCL_r$ is included and equal to '1', the mobile station shall:

  - Set $NUM\_SOFT\_SWITCHING\_SLOTS\_CHM_s$ according to Table 3.7.2.3.2.21-9 based on the value of $NUM\_SOFT\_SWITCHING\_SLOTS\_CHM_r$.
  - Set $NUM\_SOFTER\_SWITCHING\_SLOTS\_CHM_s$ according to Table 3.7.2.3.2.21-9 based on the value of $NUM\_SOFTER\_SWITCHING\_SLOTS\_CHM_r$.

+ If $CHM\_SWITCHING\_PARMS\_INCL_r$ is included and equal to '0', the mobile station shall:

  - Set $NUM\_SOFT\_SWITCHING\_SLOTS\_CHM_s$ according to Table 3.7.2.3.2.21-9 based on the value of $NUM\_SOFT\_SWITCHING\_SLOTS_r$.
  - Set $NUM\_SOFTER\_SWITCHING\_SLOTS\_CHM_s$ according to Table 3.7.2.3.2.21-9 based on the value of $NUM\_SOFTER\_SWITCHING\_SLOTS_r$.

+ If $FOR\_PDCH\_PARMS\_INCL_r$ is equal to '1', the mobile station shall set $PDCH\_SOFT\_SWITCHING\_DELAY_s$ to $PDCH\_SOFT\_SWITCHING\_DELAY_r + 1$, and $PDCH\_SOFTER\_SWITCHING\_DELAY_s$ to $PDCH\_SOFTER\_SWITCHING\_DELAY_r + 1$.

- If $FOR\_PDCH\_PARMS\_INCL_r$ is equal to '1', and $FOR\_PDCH\_COMMON\_PARMS_r$ is equal to '1', the mobile station shall store the following parameters that are common to all pilots in the Active Set:
  - The mobile station shall set $FOR\_PDCH\_COMMON\_PARMS_s$ to '1'.
  - The mobile station shall set $WALSH\_TABLE\_ID_s$ to $WALSH\_TABLE\_ID_r$.
  - The mobile station shall set NUM_PDCCH_s to NUM_PDCCH_r.
  - The mobile station shall set $FOR\_PDCCH\_WALSH_s[i]$ to the ith occurrence of $FOR\_PDCCH\_WALSH_r$.
  - The mobile station shall set $TX\_DISABLED\_TIMER_s$ to $TX\_DISABLED\_TIMER_r$.
- If $FOR\_PDCH\_PARMS\_INCL_r$ is equal to '0', and $FOR\_PDCH\_COMMON\_PARMS_s$ is equal to '0', the mobile station shall send a *Mobile Station Reject Order* with ORDQ equal to '00000011' (message structure not acceptable) and remain in the current state.
- If $EXT\_CH\_IND_r$ signals the allocation of a R-PDCH, the mobile station shall:
  - Set $FOR\_GCH\_ASSIGNED_s$ to $FOR\_GCH\_ASSIGNED_r$.
  - Set $FOR\_RCCH\_ASSIGNED_s$ to $FOR\_RCCH\_ASSIGNED_r$.
  - If $FOR\_RCCH\_ASSIGNED_s$ is equal to '1', the mobile station shall:
    - Set $FOR\_RCCH\_DRC\_MODE_s$ to $FOR\_RCCH\_DRC\_MODE_r$.
    - Set $FOR\_RCCH\_REPETITION_s$ to $FOR\_RCCH\_REPETITION_r$.
    - Set $FOR\_RCCH\_UPDATE\_RATE_s$ to $FOR\_RCCH\_UPDATE\_RATE_r$.
  - If $FOR\_ACKCH\_ASSIGNED_r$ is equal to '1', the mobile station shall set $FOR\_ACKCH\_MODE_s$ to $FOR\_ACKCH\_MODE_r$.
  - If $FOR\_ACKCH\_COMB\_SEL_r$ is included, the mobile station shall set $FOR\_ACKCH\_COMB\_SEL_s$ to $FOR\_ACKCH\_COMB\_SEL_r$; otherwise, the mobile station shall set $FOR\_ACKCH\_COMB\_SEL_s$ to '0'.
  - If $REV\_PDCH\_RLGAIN\_INCL_r$ is included and equal to '1', the mobile station shall perform the following:
    - The mobile station shall set $RLGAIN\_SPICH\_PILOT_s$ to $RLGAIN\_SPICH\_PILOT_r$.

- ◊ The mobile station shall set $RLGAIN\_REQCH\_PILOT_s$ to $RLGAIN\_REQCH\_PILOT_r$.
- ◊ The mobile station shall set $RLGAIN\_PDCCH\_PILOT_s$ to $RLGAIN\_PDCCH\_PILOT_r$.

- o If $REV\_PDCH\_PARMS\_1\_INCL_r$ is included and equal to '1', the mobile station shall perform the following:
  - ◊ The mobile station shall set $REV\_PDCH\_TABLE\_SEL_s$ to $REV\_PDCH\_TABLE\_SEL_r$.
  - ◊ The mobile station shall set $REV\_PDCH\_MAX\_AUTO\_TPR_s$ to $REV\_PDCH\_MAX\_AUTO\_TPR_r$.

+ Otherwise, the mobile station shall:
  - o Set $FOR\_GCH\_ASSIGNED_s$ to NULL.
  - o Set $FOR\_RCCH\_ASSIGNED_s$ to NULL.

+ For each member of the Active Set included in the message, the mobile station shall perform the following:
  - o Set PILOT_PN to $PILOT\_PN_r$.
  - o If $SRCH\_OFFSET\_INCL_r$ equals '1', set the SRCH_OFFSET field of PILOT_REC to $SRCH\_OFFSET_r$; otherwise, set the SRCH_OFFSET field of PILOT_REC to '000'.
  - o Set ADD_PILOT_REC_INCL to $ADD\_PILOT\_REC\_INCL_r$.
  - o If $ADD\_PILOT\_REC\_INCL_r$ equals '1', the mobile station shall also perform the following:
    - ◊ Set the PILOT_REC_TYPE field of PILOT_REC to $PILOT\_REC\_TYPE_r$.
    - ◊ If $PILOT\_REC\_TYPE_r$ is equal to '000', the mobile station shall set the TD_POWER_LEVEL field of PILOT_REC to $TD\_POWER\_LEVEL_r$ and set the TD_MODE field of NGHBR_PILOT_REC to TD_MODE_r.
    - ◊ If $PILOT\_REC\_TYPE_r$ is equal to '001', the mobile station shall:
      - – Set the AUX_PILOT_QOF field of PILOT_REC to QOF_r.
      - – Set the AUX_PILOT_WALSH_CODE field of PILOT_REC to $AUX\_PILOT\_WALSH_r$ with the Walsh Code length specified by $WALSH\_LENGTH_r$.
    - ◊ If $PILOT\_REC\_TYPE_r$ is equal to '010', the mobile station shall:
      - – Set the AUX_PILOT_TD_QOF field of PILOT_REC to QOF_r.

- – Set the AUX_PILOT_WALSH_CODE field of PILOT_REC to AUX_WALSH_r with the Walsh Code length specified by $WALSH\_LENGTH_r$.
- – Set the AUX_TD_POWER_LEVEL field of PILOT_REC to $AUX\_TD\_POWER\_LEVEL_r$.
- – Set the TD_MODE field of PILOT_REC to TD_MODE_r.

- o Set $FOR\_PDCH\_INCL_s$ to $FOR\_PDCH\_INCL_r$.
- o If $FOR\_PDCH\_INCL_r$ is equal to '1', the mobile station shall perform the following:
  - ◊ If $FOR\_PDCH\_PARMS\_INCL_r$ is equal to '1', and $FOR\_PDCH\_COMMON\_PARMS_r$ is equal to '0', the mobile station shall store the following parameters:
    - – The mobile station shall set $FOR\_PDCH\_COMMON\_PARMS_s$ to '0'.– The mobile station shall set $WALSH\_TABLE\_ID_s$ to $WALSH\_TABLE\_ID_r$.
    - – The mobile station shall set NUM_PDCCH_s to NUM_PDCCH_r.
    - – The mobile station shall set $FOR\_PDCCH\_WALSH_s[i]$ to the ith occurrence of $FOR\_PDCCH\_WALSH_r$.
  - ◊ The mobile station shall set MAC_ID_s to MAC_ID_r.
  - ◊ The mobile station shall set $REV\_CQICH\_COVER_s$ to $REV\_CQICH\_COVER_r$.
  - ◊ If $EXT\_CH\_IND_r$ signals the allocation of a F-CPCCH, the mobile station shall set $FOR\_CPCCH\_WALSH_s$ to $FOR\_CPCCH\_WALSH_r$, and FOR_CPCSCH_s to FOR_CPCSCH_r.
  - ◊ The mobile station shall store $FOR\_PDCCH\_WALSH_s[i]$ to the ith occurrence of $FOR\_PDCCH\_WALSH_r$.
- o The mobile station shall set $PWR\_COMB\_IND_s$ to $PWR\_COMB\_IND_r$.
- o If $PDCH\_GROUP\_IND\_INCL_r$ is equal to '1', the mobile station shall set $PDCH\_GROUP\_IDENTIFIER_s$ as follows:
  - ◊ If this is the first pilot in the list that has a F-PDCH assignment, the mobile station shall perform the following:
    - – The mobile station shall set $PDCH\_GROUP\_IDENTIFIER_s$ to '000';
  - ◊ Otherwise, the mobile station shall perform the following:

- If $PDCH\_GROUP\_IND_r$ is set to '1', the mobile station shall set $PDCH\_GROUP\_IDENTIFIER_s$ to the same value as that of the previous pilot in the list that has a F-PDCH assigned; otherwise, the mobile station shall set $PDCH\_GROUP\_IDENTIFIER_s$ to the value one greater than that of the previous pilot in the list that has a F-PDCH assigned.

- Otherwise, the mobile station shall perform the following:
  - If this is the first pilot in the list that has a F-PDCH assignment, the mobile station shall perform the following:
    - The mobile station shall set $PDCH\_GROUP\_IDENTIFIER_s$ to '000';
  - Otherwise, the mobile station shall perform the following:
    - If F-PDCH is assigned for this pilot, the mobile station shall perform the following:
      - If $PWR\_COMB\_IND_r$ is set to '1', and there are no pilots between this pilot and the previous pilot in the list that has a F-PDCH assigned, the mobile station shall set $PDCH\_GROUP\_IDENTIFIER_s$ to the same value as that of the previous pilot in the list that has a F-PDCH assigned.
      - If $PWR\_COMB\_IND_r$ is set to '1', and all pilots between this pilot and the previous pilot in the list that has a F-PDCH assigned have PWR_COMB_IND set to '1', the mobile station shall set $PDCH\_GROUP\_IDENTIFIER_s$ to the same value as that of the previous pilot in the list that has a F-PDCH assigned.
      - Otherwise, the mobile station shall set $PDCH\_GROUP\_IDENTIFIER_s$ to the value one greater than that of the previous pilot in the list.
    - Otherwise, the mobile station shall set $PDCH\_GROUP\_IDENTIFIER_s$ to NULL.

- If $EXT\_CH\_IND_r$ signals the allocation of a F-FCH, the mobile station shall set $CODE\_CHAN\_FCH_s$ to $CODE\_CHAN\_FCH_r$, and $QOF\_MASK\_ID\_FCH_s$ to $QOF\_MASK\_ID\_FCH_r$.

- If $EXT\_CH\_IND_r$ signals the allocation of a F-DCCH, the mobile station shall set $CODE\_CHAN\_DCCH_s$ to $CODE\_CHAN\_DCCH_r$, and $QOF\_MASK\_ID\_DCCH_s$ to $QOF\_MASK\_ID\_DCCH_r$.

- If $EXT\_CH\_IND_r$ signals the allocation of a F-DCCH, the mobile station shall set $CODE\_CHAN\_DCCH_s$ to $CODE\_CHAN\_DCCH_r$, and $QOF\_MASK\_ID\_DCCH_s$ to $QOF\_MASK\_ID\_DCCH_r$.
- If $FOR\_PDCH\_INCL_r$ is equal to '1', $EXT\_CH\_IND_r$ signals the allocation of a R-PDCH, and if $FOR\_ACKCH\_ASSIGNED_r$ is equal to '1', the mobile station shall set $FOR\_ACKCH\_WALSH\_INDEX_s$ to $FOR\_ACKCH\_WALSH\_INDEX_r$, and $FOR\_ACKSCH\_INDEX_s$ to $FOR\_ACKSCH\_INDEX_r$.
- If $FOR\_RCCH\_INCL_r$ is included and set to '1', the mobile station shall do the following:
  - ◊ set $FOR\_RCCH\_WALSH\_INDEX_s$ to $FOR\_RCCH\_WALSH\_INDEX_s$.
  - ◊ set FOR_RCSCH_INDEXs to $FOR\_RCSCH\_INDEX_r$.
- If $FOR\_PDCH\_INCL_r$ is equal to '1', and if $FOR\_GCH\_ASSIGNED_r$ is included and set to '1', the mobile station shall perform the following;
  - ◊ set $NUM\_FOR\_GCH_s$ to $NUM\_FOR\_GCH_r$, and
  - ◊ for each of the $NUM\_FOR\_GCH_s$ occurrences of $FOR\_GCH\_WALSH\_INDEX_r$, the mobile station shall set $FOR\_GCH\_WALSH\_INDEX_s[j]$ to $FOR\_GCH\_WALSH\_INDEX_r[j]$.
- Otherwise, the mobile station shall perform the following:
  - ◊ set $NUM\_FOR\_GCH_s$ to 0, and
  - ◊ set $FOR\_GCH\_WALSH\_INDEX_s$ to NULL.
- If SCH_INCL_r is equal to '1' and NUM_SCH is equal to '00000', the mobile station shall delete the corresponding pilot from the all entries of the corresponding Supplemental Channel.
- If SCH_INCL_r is equal to '1' and NUM_SCH is not equal to '00000', for each Supplemental Channel included in this record, the mobile station shall:
  - ◊ If PILOT_INCL is equal to '0', then the mobile station shall delete the corresponding pilot from the Active Set of Supplemental Channel for the corresponding $SCCL\_INDEX_r$.
  - ◊ If PILOT_INCL is equal to '1', then for each Supplemental Channel included in this record, the mobile station shall set $PILOT\_PN_s$ $[FOR\_SCH\_ID_r][SCCL\_INDEX_r][i]$ to $PILOT\_PN_r$, $QOF\_ID_s[FOR\_SCH\_ID_r][SCCL\_INDEX_r][i]$ to $QOF\_MASK\_ID\_SCH_r$, and $FOR\_SCH\_CC\_INDEX_s[FOR\_SCH\_ID_r][SCCL\_INDEX_r][i]$ to $CODE\_CHAN\_SCH_r$.

◊ If PILOT_INCL is equal to ‘1’ and CCSH_INCLUDED is set to ‘1’, then for each Supplemental Channel included in this record, the mobile station shall set $CCSH\_ENCODER\_TYPE_s[FOR\_SCH\_ID_r][SCCL\_INDEX_r][i]$ to $CCSH\_ENCODER\_TYPE_r$.

◊ If PILOT_INCL is equal to ‘1’ and CCSH_INCLUDED is set to ‘0’, then for each Supplemental Channel included in this record, the mobile station shall set $CCSH\_ENCODER\_TYPE_s[FOR\_SCH\_ID_r][SCCL\_INDEX_r][i]$ to ‘0’ (default Turbo Encoder type).

◊ The mobile station shall delete all pilots that are not included in the list specified by the NUM_PILOTS field from the Active Set of Supplemental Channel for the corresponding $SCCL\_INDEX_r$.

+ If CCSH_INCLUDED is equal to ‘1’, the mobile station shall perform the following:

  o If $CCSH\_ENCODER\_ACTION\_TIME_r$ is received, then the mobile station shall set $CCSH\_ENCODER\_ACTION\_TIME_s$ to $CCSH\_ENCODER\_ACTION\_TIME_r$, and the mobile station shall apply each $CCSH\_ENCODER\_TYPE_s$ at the time specified by $CCSH\_ENCODER\_ACTION\_TIME_r$.

  o If $CCSH\_ENCODER\_ACTION\_TIME_r$ is not received, the mobile station shall apply each $CCSH\_ENCODER\_TYPE_s$ at the action time of the message.

+ The mobile station shall set $FUNDICATED\_BCMC\_IND_s$ to $FUNDICATED\_BCMC\_IND_r$. If $FUNDICATED\_BCMC\_IND_r$ equals ‘1’ and the $EXT\_CH\_IND_r$ signals the allocation of a F-FCH, the mobile station shall set FCH_BCMC_IND to ‘1’; otherwise, the mobile station shall set FCH_BCMC_IND to ‘0’.

+ If $FUNDICATED\_BCMC\_IND_r$ equals ‘1’and $ADD\_PLCM\_FOR\_FCH\_INCL_r$ is included and is set to ‘1’, the mobile station shall store the following:

  o Set $ADD\_PLCM\_FOR\_FCH\_TYPE_s$ to $ADD\_PLCM\_FOR\_FCH\_TYPE_r$.

  o Set $ADD\_PLCM\_FOR\_FCH\_39_s$ to $ADD\_PLCM\_FOR\_FCH\_39_r$ if $ADD\_PLCM\_FOR\_FCH\_TYPE_r$ is equal to ‘1’.

+ The mobile station shall delete all pilots that are not listed in the NUM_PILOTS field from the Active Set.

+ The mobile station shall delete all pilots that are not listed in the Active Set from the Active Set of the Supplemental Channel for the Forward Supplemental Channel Assignment (if any). If these deleted pilots include all pilots in the Active Set of the Supplemental Channel, the mobile station shall cancel the Forward Supplemental Channel Assignment.

- If the CH_IND_r is set to '111' and $FUNDICATED\_BCMC\_IND_r$ equals '1', the mobile station shall change the R-FCH assignment as specified in $REV\_FCH\_ASSIGNED_r$, at the specified action time.
- If the most significant bit of CH_IND_r is set to '1' and PILOT_GATING_USE_RATE is equal to '1', the mobile station shall set PILOT_GATING_USE_RATE to '0' and shall start the continuous reverse pilot at the specified action time. If the most significant bit of CH_IND_r is set to '0', CH_IND_r is not equal to '000', and PILOT_GATING_USE_RATE is equal to '0', the mobile station shall perform the following:
  - The mobile station shall set PILOT_GATING_USE_RATE to '1' and shall start the reverse pilot gating at the specified action time.
  - If the Fundamental Channel is also being released, the mobile station shall store the configuration used for the Fundamental Channel.
  - The mobile station shall cancel the forward and reverse supplemental channel assignment, if any.
- The mobile station shall set $IGNORE\_ESCAM_s$ and $IGNORE\_SCAM_s$ to '0'.
- Set the pilot detection threshold for the Target Frequency and the Candidate Frequency:
  - Set $TF\_T\_ADD_s$ to T_ADD_s.
  - If the Target Frequency is the same as the Candidate Frequency ($TF\_CDMABAND_s$ is equal to $CF\_CDMABAND_s$ and TF_CDMACH_s is equal to CF_CDMACH_s), set $CF\_T\_ADD_s$ to T_ADD_s.
- If $PERIODIC\_SEARCH_s$ is equal to '0' and a periodic search is in progress, the mobile station shall abort the periodic search (see 2.6.6.2.8.3.4 and 2.6.6.2.10.4).
- The mobile station shall determine its roaming status (see 2.6.5.3). The mobile station should indicate to the user whether the mobile station is roaming.
- Perform a soft or hard handoff depending on the following conditions:
  - If any of the following conditions is true, the mobile station shall perform a hard handoff:
    + EXTRA_PARMS is set to '1' and either $BAND\_CLASS_r$ is not equal to $SF\_CDMABAND_s$, $CDMA\_FREQ_r$ is not equal to SF_CDMACH_s, or $FRAME\_OFFSET_r$ is not equal to $SF\_FRAME\_OFFSET_s$, or

+ The set of pilots specified by the message is disjoint from the Active Set prior to the action time of the message.

– If the mobile station performs a hard handoff, it shall perform the following:

+ If a Periodic Serving Frequency Pilot Report Procedure is in progress, the mobile station shall abort the procedure (see 2.6.6.2.12).

+ If a Candidate Frequency periodic search is in progress, the mobile station shall abort the periodic search (see 2.6.6.2.8.3.4 and 2.6.6.2.10.4).

+ If a Forward Supplemental Channel assignment or a Reverse Supplemental Channel assignment is in progress, the mobile station shall abort it.

+ The mobile station shall cancel any outstanding Forward Supplemental Channel assignment or Reverse Supplemental Channel assignment that is not specified by this message.

+ The mobile station shall cancel the current Forward Supplemental Channel assignment or the Reverse Supplemental Channel assignment, if it is in progress. If the message does not specify another Forward Supplemental Channel assignment or Reverse Supplemental Channel assignment, the mobile station shall cancel the outstanding Forward Supplemental Channel assignment or Reverse Supplemental Channel assignment, if any.

+ If $RETURN\_IF\_HANDOFF\_FAIL_S$ is equal to '0', the mobile station shall perform actions specified in 2.6.6.2.8.1. If the message specifies more than one pilot, the mobile station shall also perform actions specified in 2.6.6.2.7.1 and 2.6.6.2.7.2.

+ If $RETURN\_IF\_HANDOFF\_FAIL_S$ is equal to '1', the mobile station shall perform actions specified in 2.6.6.2.8.2. If the message specifies more than one pilot, the mobile station shall also perform actions specified in 2.6.6.2.7.1 and 2.6.6.2.7.2.

– Otherwise, the mobile station shall perform a soft handoff as specified in 2.6.6.2.7.

12. *Mobile Assisted Burst Operation Parameters Message*: The mobile station shall process this message as follows:

- The mobile station shall set $ORDER\_FLAG_s$ to $ORDER\_FLAG_r$.
- If $ORDER\_FLAG_r$ is equal to '1', the mobile station shall perform the following:
  - The mobile station shall set $PS\_MIN\_DELTA_s$ to $PS\_MIN\_DELTA_r + 1$.
  - The mobile station shall set $ORDER\_INTERVAL_s$ to $ORDER\_INTERVAL_r$.

- If $ORDER\_FLAG_r$ is equal to '0', the mobile station shall perform the following:
  - The mobile station shall set $PS\_MIN\_DELTA_s$ to 0.
  - The mobile station shall set $ORDER\_INTERVAL_s$ to 0.
- The mobile station shall set $PERIODIC\_FLAG_s$ to $PERIODIC\_FLAG_r$.
- If $PERIODIC\_FLAG_r$ is equal to '1', the mobile station shall perform the following:
  - The mobile station shall set NUM_PILOTS_s to NUM_PILOTS_r.
  - The mobile station shall set $PERIODIC\_INTERVAL_s$ to $PERIODIC\_INTERVAL_r$.
- If $PERIODIC\_FLAG_r$ is equal to '0', the mobile station shall perform the following:
  - The mobile station shall set NUM_PILOTS_s to 0.
  - The mobile station shall set $PERIODIC\_INTERVAL_s$ to 0.
- The mobile station shall set $THRESHOLD\_FLAG_s$ to $THRESHOLD\_FLAG_r$.
- If $THRESHOLD\_FLAG_r$ is equal to '1', the mobile station shall perform the following:
  - The mobile station shall set $PS\_FLOOR\_LOW_s$ to $PS\_FLOOR\_LOW_r$.
  - The mobile station shall set $PS\_FLOOR\_HIGH_s$ to $PS\_FLOOR\_HIGH_r$.
  - The mobile station shall set $PS\_CEILING\_LOW_s$ to $PS\_CEILING\_LOW_r$.
  - The mobile station shall set $PS\_CEILING\_HIGH_s$ to $PS\_CEILING\_HIGH_r$.
- If $THRESHOLD\_FLAG_r$ is equal to '0', the mobile station shall perform the following:
  - The mobile station shall set $PS\_FLOOR\_LOW_s$ to '0'.
  - The mobile station shall set $PS\_FLOOR\_HIGH_s$ to '0'.
  - The mobile station shall set $PS\_CEILING\_LOW_s$ to '0'.
  - The mobile station shall set $PS\_CEILING\_HIGH_s$ to '0'.

13. *Extended Supplemental Channel Assignment Message*: The mobile station shall process this message as follows:

    The mobile station shall send a *Mobile Station Reject Order* with the ORDQ field set to the specified value if any of the following conditions is true, and shall not perform any other action described in this section for processing the *Extended Supplemental Channel Assignment Message:*

- The mobile station shall send a *Mobile Station Reject Order* with the ORDQ field set to '00000110' (capability not supported), if the number of forward or reverse Supplemental Channels specified in the *Extended Supplemental Channel Assignment Message* is greater than the maximum number of Supplemental Channels supported by the mobile station.
- The mobile station shall send a *Mobile Station Reject Order* with the ORDQ field set to '00000100' (message field not in valid range), if PILOT_PN specified in the *Extended Supplemental Channel Assignment Message* is not in the Active Set.
- The mobile station shall send a *Mobile Station Reject Order* with the ORDQ field set to '00000111' (message can not be handled by the current mobile station configuration), if the message includes a reverse Supplemental Channel assignment, and any of the following conditions is true:
  - any of the mobile station's reverse supplemental channel configuration parameter for the corresponding Supplemental Channel is NULL, or,
  - the Reverse Packet Data Channel is assigned.
- The mobile station shall send a *Mobile Station Reject Order* with the ORDQ field set to '00000111' (message can not be handled by the current mobile station configuration), if the message includes a forward Supplemental Channel assignment and any of the mobile station's forward supplemental channel configuration parameter for the corresponding Supplemental Channel is NULL.

If none of the above conditions is true, the mobile station shall perform the following:

- The mobile station shall store $REV\_SCH\_DTX\_DURATION_r$, Reverse Supplemental Channel Discontinuous Transmission Duration, as $REV\_SCH\_DTX\_DURATION_s$ at the action time of the message.
- The mobile station shall store the unit for $START\_TIME\_UNIT_s$ = $START\_TIME\_UNIT_r$.
- The mobile station shall store $USE\_T\_ADD\_ABORT_r$, Reverse Supplemental Channel assignment T_ADD abort indicator, as $USE\_T\_ADD\_ABORT_s$.
- If $IGNORE\_ESCAM_s$ is equal to '1' and $SCRM\_SEQ\_NUM_r$ is not present or is present and is not equal to $SCRM\_SEQ\_NUM_s$, then the mobile station shall not process the remaining Reverse Supplemental Channel assignment information in this message.
- If $IGNORE\_ESCAM_s$ is equal to '1' and $SCRM\_SEQ\_NUM_r$ is present and is equal to $SCRM\_SEQ\_NUM_s$, then the mobile station shall set $IGNORE\_ESCAM_s$ to '0'.

- If $ADD\_INFO\_INCL_r$ is equal to '1', the message includes a Supplemental Channel assignment (that is, $NUM\_FOR\_SCH_r$ is not equal to '00' and/or $NUM\_REV\_SCH_r$ is not equal to '00'), and PILOT_GATING_USE_RATE is equal to '1', the mobile station shall process the following information of the *Extended Supplemental Channel Assignment Message* as follows:
  - The mobile station shall set $FPC\_PRI\_CHAN_s = FPC\_PRI\_CHAN_r$ at the action time of the message.
- If REV_CFG_INCLUDED is equal to '1', for all the (NUM_REV_CFG_RECS + 1) occurrences of the reverse configuration record, the mobile station shall store the REV_WALSH_ID matrix as follows:
  - $REV\_WALSH\_ID_s[REV\_SCH\_ID_r][REV\_SCH\_NUM\_BITS\_IDX_r] = REV\_WALSH\_ID_r$
- If $NUM\_REV\_SCH_r$ is not equal to '00', then the mobile station shall store the following information for each occurrence of the record and process the Reverse Supplemental Burst as specified in 2.6.6.2.5.1.2:
  - $REV\_SCH\_START\_TIME\_INCL_s[REV\_SCH\_ID_r] = REV\_SCH\_START\_TIME\_INCL_r$
  - If $REV\_SCH\_START\_TIME\_INCL_s[REV\_SCH\_ID_r]$ is set to '1', set $REV\_SCH\_START\_TIME_s[REV\_SCH\_ID_r] = REV\_SCH\_START\_TIME_r$
  - $REV\_SCH\_DURATION_s[REV\_SCH\_ID_r] = REV\_SCH\_DURATION_r$
  - $REV\_SCH\_NUM\_BITS\_IDX_s[REV\_SCH\_ID_r] = REV\_SCH\_NUM\_BITS\_IDX_r$
- If $NUM\_FOR\_SCH_r$ is not equal to '00', then the mobile station shall store the following information for each occurrence of the record and process the Forward Supplemental Burst as specified in 2.6.6.2.5.1.1:
  - $FOR\_SCH\_START\_TIME\_INCL_s[FOR\_SCH\_ID_r] = FOR\_SCH\_START\_TIME\_INCL_r$
  - If $FOR\_SCH\_START\_TIME\_INCL_s[FOR\_SCH\_ID_r]$ is set to '1', set $FOR\_SCH\_START\_TIME_s[FOR\_SCH\_ID_r] = FOR\_SCH\_START\_TIME_r$
  - $FOR\_SCH\_DURATION_s[FOR\_SCH\_ID_r] = FOR\_SCH\_DURATION_r$
  - $FOR\_SCH\_FER\_REP_s[FOR\_SCH\_ID_r] = FOR\_SCH\_FER\_REP_r$
  - $SCCL\_INDEX_s[FOR\_SCH\_ID_r] = SCCL\_INDEX_r$
  - If SCH_BCMC_IND field is included the mobile station shall perform the following:
    - If $SCH\_BCMC\_IND_r$ equals '1' and $USE\_ADD\_PLCM\_FOR\_SCH_r$ equals '1', set corresponding $SCH\_BCMC\_IND[FOR\_SCH\_ID_r]$ to '1'; otherwise, set $SCH\_BCMC\_IND[FOR\_SCH\_ID_r]$ = '0'.
  - If $SCH\_BCMC\_IND_r$ is included and equals '1' and $ADD\_PLCM\_FOR\_SCH\_INCL_r$ is included and is set to '1', the mobile station shall store following fields:

+ Set $ADD\_PLCM\_FOR\_SCH\_TYPE_s$ to $ADD\_PLCM\_FOR\_SCH\_TYPE_r$.
+ Set $ADD\_PLCM\_FOR\_SCH\_35_s$ to $ADD\_PLCM\_FOR\_SCH\_35_r$ if $ADD\_PLCM\_FOR\_SCH\_TYPE_r$ is equal to '1'.

– If $SCH\_BCMC\_IND_r$ is included and equals '1', the mobile station shall store following fields:
+ $USE\_ADD\_PLCM\_FOR\_SCH_s[FOR\_SCH\_ID_r] = USE\_ADD\_PLCM\_FOR\_SCH_r$
+ $FSCH\_OUTERCODE\_INCL_s[FOR\_SCH\_ID_r] = FSCH\_OUTERCODE\_INCL_r$
+ If $FSCH\_OUTERCODE\_INCL_r$ equals '1', the mobile station shall store following fields:
  - o $FSCH\_OUTERCODE\_RATE_s[FOR\_SCH\_ID_r] = FSCH\_OUTERCODE\_RATE_r$
  - o $FSCH\_OUTERCODE\_OFFSET_s[FOR\_SCH\_ID_r] = FSCH\_OUTERCODE\_OFFSET_r$

• If FOR_CFG_INCLUDED is equal to '1', the mobile station shall perform the following:
– Set $FOR\_SCH\_FER\_REP_s$ to $FOR\_SCH\_FER\_REP_r$.
– If $FOR\_SCH\_FER\_REP_r$ is equal to '0', set $SCH\_TOT\_FRAMES_s$ and $SCH\_BAD\_FRAMES_s$ to 0.
– Store NUM_FOR_CFG_RECS occurrences of Forward Supplemental Channel Configuration associated with the identification of Forward Supplemental Channel.

• For each record of the Forward Supplemental Channel Code list the mobile station shall store the Forward Supplemental Channel Code list associated with the $FOR\_SCH\_ID_r$ as follows:
– $NUM\_SUP\_SHO_s[FOR\_SCH\_ID_r][SCCL\_INDEX_r] = NUM\_SUP\_SHO_r$.
– The mobile station shall determine, $N\_FSCH\_BITS\_SET_s[FOR\_SCH\_ID_r][SCCL\_INDEX_r]$, the number of information bits per Forward Supplemental Channel frame identified by FOR_SCH_ID and corresponding to the index SCCL_INDEX according to the following rules:
+ If $FSCH\_VAR\_TABLE\_ID_s[FOR\_SCH\_ID_r]$ is equal to '000', then:

- o If $USE\_FLEX\_NUM\_BITS_s$ is equal to '0' or if $USE\_FLEX\_NUM\_BITS_s$ is equal to '1' and $FSCH\_NBIT\_TABLE\_ID_s[FOR\_SCH\_ID_r]$ is equal to '0000', then the mobile station shall set the number of information bits per frame, $N\_FSCH\_BITS\_SET_s[FOR\_SCH\_ID_r][SCCL\_INDEX_r]$ and number of CRC bits per frame, $FSCH\_CRC\_LEN\_SET_s[FOR\_SCH\_ID_r][SCCL\_INDEX_r]$, according to Table 3.7.3.3.2.37-2 using $FOR\_SCH\_NUM\_BITS\_IDX_r$ as the index to the table.
- o If $USE\_FLEX\_NUM\_BITS_s$ is equal to '1' and $FSCH\_NBIT\_TABLE\_ID_s[FOR\_SCH\_ID_r]$ is not equal to '0000', then the mobile station shall set the number of CRC bits per frame, $FSCH\_CRC\_LEN\_SET_s[FOR\_SCH\_ID_r][SCCL\_INDEX_r]$, using Table 3.7.5.20-1 and $CRC\_LEN\_IDX_s[FSCH\_NBIT\_TABLE\_ID_s[FOR\_SCH\_ID_r]][FOR\_SCH\_NUM\_BITS\_IDX_r]$ as the index to the table.
  The mobile station shall also set the number of information bits per frame corresponding to $SCCL\_INDEX_r$, $N\_FSCH\_BITS\_SET_s[FOR\_SCH\_ID_r][SCCL\_INDEX_r]$, to $NUM\_BITS_s[FSCH\_NBIT\_TABLE\_ID_s[FOR\_SCH\_ID_r]][FOR\_SCH\_NUM\_BITS\_IDX_r]$.

+ If $FSCH\_VAR\_TABLE\_ID_s[FOR\_SCH\_ID_r]$ is not equal to '000', then:

- o The mobile station shall set $N\_FSCH\_BITS\_IDX\_SET_s[FOR\_SCH\_ID_r]$, the set of indices to the number of information bits per frame as follows:
  - ◊ If $FOR\_SCH\_NUM\_BITS\_IDX_r$ is equal to '0000', then $N\_FSCH\_BITS\_IDX\_SET_s[FOR\_SCH\_ID_r]$ = **{** $FOR\_SCH\_NUM\_BITS\_IDX_r$ **},**
  - ◊ otherwise the mobile station shall set (initialize) $N\_FSCH\_BITS\_IDX\_SET_s[FOR\_SCH\_ID_r]$ = **{**$FOR\_SCH\_NUM\_BITS\_IDX_r$**}** and for i=1, ..., $FOR\_SCH\_NUM\_BITS\_IDX_r$ the mobile station shall add $FOR\_SCH\_NUM\_BITS\_IDX_r$ - $VAR\_FSCH\_RATE\_OFFSET_s[FOR\_SCH\_ID_r][FOR\_SCH\_NUM\_BITS\_IDX_r][i]$ to the set specified by $N\_FSCH\_BITS\_IDX\_SET_s[FOR\_SCH\_ID_r]$

- If $USE\_FLEX\_NUM\_BITS_S$ is equal to '0' or if $USE\_FLEX\_NUM\_BITS_S$ is equal to '1' and $FSCH\_NBIT\_TABLE\_ID_S[FOR\_SCH\_ID_r]$ is equal to '0000', then the mobile station shall set $N\_FSCH\_BITS\_SET_S[FOR\_SCH\_ID_r][SCCL\_INDEX_r]$, the set of number of information bits per frame as follows.
  The ith member of the set $N\_FSCH\_BITS\_SET_S[FOR\_SCH\_ID_r][SCCL\_INDEX_r]$ is obtained using Table 3.7.3.3.2.37-2 and the ith member of the set $N\_FSCH\_BITS\_IDX\_SET_S[FOR\_SCH\_ID_r]$ as the index to the table.
- If $USE\_FLEX\_NUM\_BITS_S$ is equal to '1' and $FSCH\_NBIT\_TABLE\_ID_S[FOR\_SCH\_ID_r]$ is not equal to '0000', then
  - the mobile station shall set $N\_FSCH\_BITS\_SET_S[FOR\_SCH\_ID_r][SCCL\_INDEX_r]$, the set of number of information bits per frame as follows.
    The ith member of the set $N\_FSCH\_BITS\_SET_S[FOR\_SCH\_ID_r][SCCL\_INDEX_r]$ is equal to $NUM\_BITS_S[FSCH\_NBIT\_TABLE\_ID_S[FOR\_SCH\_ID_r]][N\_FSCH\_BITS\_IDX\_SET_S[FOR\_SCH\_ID_r][i]]$, where $N\_FSCH\_BITS\_IDX\_SET_S[FOR\_SCH\_ID_r][i]$ denotes the ith member of the set $N\_FSCH\_BITS\_IDX\_SET_S[FOR\_SCH\_ID_r]$ and,
  - the mobile station shall set $FSCH\_CRC\_LEN\_SET_S[FOR\_SCH\_ID_r][SCCL\_INDEX_r]$, the set of number CRC bits per frame as follows.
    The ith member of the set $FSCH\_CRC\_LEN\_SET_S[FOR\_SCH\_ID_r][SCCL\_INDEX_r]$ using Table 3.7.5.20-1 and $CRC\_LEN\_IDX_S[FSCH\_NBIT\_TABLE\_ID_S[FOR\_SCH\_ID_r]][N\_FSCH\_BITS\_IDX\_SET_S[FOR\_SCH\_ID_r][i]]$ as the index to the table, where $N\_FSCH\_BITS\_IDX\_SET_S[FOR\_SCH\_ID_r][i]$ denotes the ith member of the set $N\_FSCH\_BITS\_IDX\_SET_S[FOR\_SCH\_ID_r]$.

– For the ith record of the Forward Supplemental Channel Active Set (for all values of i between 1 and NUM_SUP_SHO+1) specified in this message, the mobile station shall store the following entries corresponding to the $SCCL\_INDEX_r$ as follows:

  + $PILOT\_PN_S[FOR\_SCH\_ID_r][SCCL\_INDEX_r][i] = PILOT\_PN_r$,
  + Set the ADD_PILOT_REC_INCL field to $ADD\_PILOT\_REC\_INCL_r$. If $ADD\_PILOT\_REC\_INCL_r$ equals '1', the mobile station shall store the following:

- Set the PILOT_REC_TYPE field of PILOT_REC to $PILOT\_REC\_TYPE_r$.
- If $PILOT\_REC\_TYPE_r$ equals '000', the mobile station shall set the TD_POWER_LEVEL field of PILOT_REC to $TD\_POWER\_LEVEL_r$ and set the TD_MODE field of PILOT_REC to TD_MODE_r.
- If $PILOT\_REC\_TYPE_r$ is equal to '001', the mobile station shall.
  - Set the AUX_PILOT_QOF field of PILOT_REC to QOF_r.
  - Set the AUX_PILOT_WALSH_CODE field of PILOT_REC to $AUX\_PILOT\_WALSH_r$ with the Walsh Code length specified by $WALSH\_LENGTH_r$.
- If $NGHBR\_PILOT\_REC\_TYPE_r$ is equal to '010', the mobile station shall:
  - Set the AUX_PILOT_TD_QOF field of PILOT_REC to QOF_r.
  - Set the AUX_PILOT_WALSH_CODE field of PILOT_REC to AUX_WALSH_r with the Walsh Code length specified by $WALSH\_LENGTH_r$.
  - Set the AUX_TD_POWER_LEVEL field of PILOT_REC to $AUX\_TD\_POWER\_LEVEL_r$.
  - Set the TD_MODE field of NGHBR_PILOT_REC to TD_MODE_r.
- If $PILOT\_REC\_TYPE_r$ is equal to '011', the mobile station shall:
  - Set the SR3_PRIMARY_PILOT field of PILOT_REC to $SR3\_PRIMARY\_PILOT_r$.
  - Set the SR3_PILOT_POWER1 field of PILOT_REC to $SR3\_PILOT\_POWER1_r$.
  - Set the SR3_PILOT_POWER2 field of PILOT_REC to $SR3\_PILOT\_POWER2_r$.
- If $PILOT\_REC\_TYPE_r$ is equal to '100', the mobile station shall:
  - Set the SR3_PRIMARY_PILOT field of PILOT_REC to $SR3\_PRIMARY\_PILOT_r$.
  - Set the SR3_PILOT_POWER1 field of PILOT_REC to $SR3\_PILOT\_POWER1_r$.
  - Set the SR3_PILOT_POWER2 field of PILOT_REC to $SR3\_PILOT\_POWER2_r$.
  - Set the AUX_PILOT_QOF field of PILOT_REC to QOF_r.
  - Set the AUX_PILOT_WALSH_CODE field of PILOT_REC to $AUX\_PILOT\_WALSH_r$ with the Walsh Code length specified by $WALSH\_LENGTH_r$.

- If $ADD\_INFO\_INCL1_r$ is equal to ‘1’, set the AUX_PILOT_QOF1 field of PILOT_REC to $QOF1_r$ and set the AUX_PILOT_WALSH_CODE1 field of PILOT_REC to $AUX\_PILOT\_WALSH1_r$ with the Walsh Code length specified by $WALSH\_LENGTH1_r$.
- Otherwise, set the AUX_PILOT_QOF1 field of PILOT_REC to QOF_r and set the AUX_PILOT_WALSH_CODE1 field of PILOT_REC to $AUX\_PILOT\_WALSH_r$ with the Walsh Code length specified by $WALSH\_LENGTH_r$.
- If $ADD\_INFO\_INCL2_r$ is equal to ‘1’, set the AUX_PILOT_QOF2 field of PILOT_REC to $QOF2_r$ and set the AUX_PILOT_WALSH_CODE2 field of PILOT_REC to $AUX\_PILOT\_WALSH2_r$ with the Walsh Code length specified by $WALSH\_LENGTH2_r$.
- Otherwise, set the AUX_PILOT_QOF2 field of PILOT_REC to QOF_r and set the AUX_PILOT_WALSH_CODE2 field of PILOT_REC to $AUX\_PILOT\_WALSH_r$ with the Walsh Code length specified by $WALSH\_LENGTH_r$.

+ $QOF\_MASK\_ID\_SCH_s[FOR\_SCH\_ID_r][SCCL\_INDEX_r][i] = QOF\_MASK\_ID\_SCH_r$,
+ $FOR\_SCH\_CC\_INDEX_s[FOR\_SCH\_ID_r][SCCL\_INDEX_r][i]= CODE\_CHAN\_SCH_r$.
+ If the mobile station supports Code Combining Soft Handoff, and CCSH_INCLUDED is set to ‘1’, set $CCSH\_ENCODER\_TYPE_s[FOR\_SCH\_ID_r][SCCL\_INDEX_r][i]= CCSH\_ENCODER\_TYPE_r$.
+ If the mobile station supports Code Combining Soft Handoff, and CCSH_INCLUDED is set to ‘0’, set $CCSH\_ENCODER\_TYPE_s[FOR\_SCH\_ID_r][SCCL\_INDEX_r][i]= 0$ (default Turbo Encoder type)

- The mobile station may soft-combine the Forward Supplemental Channel frames received on the Forward Supplemental Channels in the same Forward Supplemental Channel Active Set.
- If the mobile station supports any Radio Configuration greater than 2, the mobile station shall perform the following:
  - If FPC_INCL_r is equal to ‘1’, the mobile station shall:
    + Set $FPC\_MODE\_SCH_s$ to $FPC\_MODE\_SCH_r$.
  - If FPC_INCL is equal to ‘1’ and FPC_MODE_SCH is equal to '001', '010', ‘101’, or ‘110’, the mobile station shall:
    + Set $FPC\_SEC\_CHAN_s$ to $FPC\_SEC\_CHAN_r$.

+ Set $FPC\_BCMC\_CHAN_s$ to $FPC\_BCMC\_CHAN_r$.

– If NUM_SUP_r is included and not equal to '00', for each Supplemental Channel included in the message, the mobile station shall:

+ Set SCH_ID_s to SCH_ID_r.

+ Set $FPC\_SCH\_FER_s$ to $FPC\_SCH\_FER_r$.

+ Set $FPC\_SCH\_INIT\_SETPT_s$ as follows:

o If $FPC\_SCH\_INIT\_SETPT\_OP_r$ is set to '0', set $FPC\_SCH\_INIT\_SETPT_s$ to $FPC\_SCH\_INIT\_SETPT_r$.

o If $FPC\_SCH\_INIT\_SETPT\_OP_r$ is set to '1':

◊ If $FPC\_PRI\_CHAN_r$ is equal to '0', set $FPC\_SCH\_INIT\_SETPT_s$ to ($FPC\_FCH\_CURR\_SETPT_s$ + $FPC\_SCH\_INIT\_SETPT_r$).

◊ Otherwise, set $FPC\_SCH\_INIT\_SETPT_s$ to ($FPC\_DCCH\_CURR\_SETPT_s$ + $FPC\_SCH\_INIT\_SETPT_r$).

+ Set $FPC\_SCH\_MIN\_SETPT_s$ to $FPC\_SCH\_MIN\_SETPT_r$.

+ Set $FPC\_SCH\_MAX\_SETPT_s$ to $FPC\_SCH\_MAX\_SETPT_r$.

– If FPC_THRESH_SCH_INCL is included and equal to '1', the mobile station shall set $FPC\_SETPT\_THRESH\_SCH_s$ to $SETPT\_THRESH\_SCH_r$.

• If RPC_INCL is equal to '1', the mobile station shall set $RLGAIN\_SCH\_PILOT_s$ to $RLGAIN\_SCH\_PILOT_r$.

• If $NUM\_3X\_CFG_r$ is not equal to '00', the mobile station shall store the Forward 3X Supplemental Channel Configuration associated with the identification of Forward Supplemental Channel ($NUM\_3X\_CFG_s$ = $NUM\_3X\_CFG_r$).

• For each 3X SCH record included in this message, the mobile station shall update the Forward Supplemental Channel Code list associated with the $FOR\_SCH\_ID_r$ as follows:

– For the ith record of the Forward Supplemental Channel Active Set (for all values of i between 1 and NUM_SUP_SHO+1) specified in this message, the mobile station shall store the following three entries corresponding to the $SCCL\_INDEX_r$ as follows:

+ If $3X\_SCH\_LOW\_INCL_r$ equals '1', set $QOF\_MASK\_ID\_SCH\_LOW[FOR\_SCH\_ID_r][SCCL\_INDEX_r][i]$ to $QOF\_MASK\_ID\_SCH\_LOW_r$ and $FOR\_SCH\_CC\_INDEX\_LOW[FOR\_SCH\_ID_r][SCCL\_INDEX_r][i]$ to $CODE\_CHAN\_SCH\_LOW_r$. Otherwise, set $QOF\_MASK\_ID\_SCH\_LOW[FOR\_SCH\_ID_r][SCCL\_INDEX_r][i]$ to $QOF\_MASK\_ID\_SCH[FOR\_SCH\_ID_r][SCCL\_INDEX_r][i]$ and $FOR\_SCH\_CC\_INDEX\_LOW[FOR\_SCH\_ID_r][SCCL\_INDEX_r][i]$ to $CODE\_CHAN\_SCH[FOR\_SCH\_ID_r][SCCL\_INDEX_r][i]$.

+ If $3X\_SCH\_HIGH\_INCL_r$ equals '1', set $QOF\_MASK\_ID\_SCH\_HIGH[FOR\_SCH\_ID_r][SCCL\_INDEX_r][i]$ to $QOF\_MASK\_ID\_SCH\_HIGH_r$ and $FOR\_SCH\_CC\_INDEX\_HIGH[FOR\_SCH\_ID_r][SCCL\_INDEX_r][i]$ to $CODE\_CHAN\_SCH\_HIGH_r$. Otherwise, set $QOF\_MASK\_ID\_SCH\_HIGH[FOR\_SCH\_ID_r][SCCL\_INDEX_r][i]$ to $QOF\_MASK\_ID\_SCH[FOR\_SCH\_ID_r][SCCL\_INDEX_r][i]$ and $FOR\_SCH\_CC\_INDEX\_HIGH[FOR\_SCH\_ID_r][SCCL\_INDEX_r][i]$ to $CODE\_CHAN\_SCH[FOR\_SCH\_ID_r][SCCL\_INDEX_r][i]$.

- If PILOT_GATING_USE_RATE is set to '1' and if $NUM\_REV\_SCH_r$ or $NUM\_FOR\_SCH_r$ is not equal to '00', the mobile station shall perform the following:
  - The mobile station shall set PILOT_GATING_USE_RATE to '0' and shall start the continuous reverse pilot at the specified action time and, if a F-PDCH is assigned, the mobile station shall start the continuous R-CQICH as defined in [3].
  - If a F-PDCH is not assigned and the Fundamental Channel was previously established prior to transitioning to the *Control Hold Mode*, the mobile station shall start processing F-FCH and start transmitting on R-FCH at the action time of the message. The mobile station shall establish the Fundamental Channel with the same configuration as previously used.
- If $FOR\_SCH\_CC\_INCL_r$ equals '1', the mobile station shall store the $NUM\_FOR\_SCH_r$ occurrences of the Forward Supplemental Channel channel configuration records as follows:
  - The mobile station shall store the Forward Supplemental Channel Identification ($FOR\_SCH\_ID[FOR\_SCH\_ID_r]_s = FOR\_SCH\_ID_r$).
  - The mobile station shall store the Forward Supplemental Channel Multiplex Option ($FOR\_SCH\_MUX[FOR\_SCH\_ID_r]_s = FOR\_SCH\_MUX_r$).
  - The mobile station shall store the Forward Supplemental Channel Radio Configuration ($FOR\_SCH\_RC[FOR\_SCH\_ID_r]_s = SCH\_RC_r$).
  - The mobile station shall store the Forward Supplemental Channel Coding Type ($FOR\_SCH\_CODING[FOR\_SCH\_ID_r]_s = CODING_r$).
  - If $FRAME\_40\_USED_r$ and $FRAME\_80\_USED_r$ are both equal to '0', the mobile station shall set $FOR\_SCH\_FRAME\_LENGTH_s[FOR\_SCH\_ID_r]$ to '00' (i.e., 20 ms frame length).
  - If $FRAME\_40\_USED_r$ is equal to '1', the mobile station shall set $FOR\_SCH\_FRAME\_LENGTH_s[FOR\_SCH\_ID_r]$ to '01' (i.e., 40 ms frame length).

- If $FRAME\_80\_USED_r$ is equal to '1', the mobile station shall set $FOR\_SCH\_FRAME\_LENGTH_s[FOR\_SCH\_ID_r]$ to '10' (i.e., 80 ms frame length).
- $F\_MAX\_RATE\_IDX_s[FOR\_SCH\_ID_r] = MAX\_RATE_r$.

- If $REV\_SCH\_CC\_INCL_r$ equals '1', the mobile station shall store the $NUM\_REV\_SCH_r$ occurrences of the Reverse Supplemental Channel channel configuration records as follows:
  - The mobile station shall store the Reverse Supplemental Channel Identification ($REV\_SCH\_ID[REV\_SCH\_ID_r]_s = REV\_SCH\_ID_r$).
  - The mobile station shall store the Reverse Supplemental Channel Multiplex Option ($REV\_SCH\_MUX[REV\_SCH\_ID_r]_s = REV\_SCH\_MUX_r$).
  - The mobile station shall store the Reverse Supplemental Channel Radio Configuration ($REV\_SCH\_RC[REV\_SCH\_ID_r]_s = SCH\_RC_r$).
  - The mobile station shall store the Reverse Supplemental Channel Coding Type ($REV\_SCH\_CODING[REV\_SCH\_ID_r]_s = CODING_r$).
  - If $FRAME\_40\_USED_r$ and $FRAME\_80\_USED_r$ are both equal to '0', the mobile station shall set $REV\_SCH\_FRAME\_LENGTH_s[REV\_SCH\_ID_r]$ to '00' (i.e., 20 ms frame length).
  - If $FRAME\_40\_USED_r$ is equal to '1', the mobile station shall set $REV\_SCH\_FRAME\_LENGTH_s[REV\_SCH\_ID_r]$ to '01' (i.e., 40 ms frame length).
  - If $FRAME\_80\_USED_r$ is equal to '1', the mobile station shall set $REV\_SCH\_FRAME\_LENGTH_s[REV\_SCH\_ID_r]$ to '10' (i.e., 80 ms frame length).
  - $R\_MAX\_RATE\_IDX_s[REV\_SCH\_ID_r] = MAX\_RATE_r$.

14. *Forward Supplemental Channel Assignment Mini Message*: The mobile station shall process this message as follows:

The mobile station shall send a *Mobile Station Reject Order* with the ORDQ field set to '00000111' (message can not be handled by the current mobile station configuration), if any of the mobile station's forward supplemental channel configuration parameters for the corresponding Supplemental Channel is NULL.

Otherwise, the mobile station shall store the following information and process the Forward Supplemental Burst as specified in 2.6.6.2.5.1.1:

- Set $FOR\_SCH\_START\_TIME\_INCL_s[FOR\_SCH\_ID_r]$ to '1'
- $FOR\_SCH\_START\_TIME_s[FOR\_SCH\_ID_r] = FOR\_SCH\_START\_TIME_r$
- $FOR\_SCH\_DURATION_s[FOR\_SCH\_ID_r] = FOR\_SCH\_DURATION_r$
- $SCCL\_INDEX_s[FOR\_SCH\_ID_r] = SCCL\_INDEX_r$

- If PILOT_GATING_USE_RATE is set to '1', the mobile station shall perform the following:
  - The mobile station shall set PILOT_GATING_USE_RATE to '0' and shall start the continuous reverse pilot at the specified action time and, if a F-PDCH is assigned, the mobile station shall start the continuous R-CQICH as defined in [3].
  - If a F-PDCH is not assigned and the Fundamental Channel was previously established prior to transitioning to the *Control Hold Mode*, the mobile station shall start processing F-FCH and start transmitting on R-FCH at the action time of the message. The mobile station shall establish the Fundamental Channel with the same configuration as previously used.

15. *Reverse Supplemental Channel Assignment Mini Message*: The mobile station shall process this message as follows:

The mobile station shall send a *Mobile Station Reject Order* with the ORDQ field set to '00000111' (message can not be handled by the current mobile station configuration), if any of the mobile station's reverse supplemental channel configuration parameters for the corresponding Supplemental Channel is NULL, or if the Reverse Packet Data Channel is assigned.

If $IGNORE\_ESCAM_s$ is equal to '1', the mobile station shall not process the Reverse Supplemental Channel assignment information in this message.

Otherwise, the mobile station shall store the following information and process the Reverse Supplemental Burst as specified in 2.6.6.2.5.1.2:

- Set $REV\_SCH\_START\_TIME\_INCL_s[REV\_SCH\_ID_r]$ to '1'
- $REV\_SCH\_START\_TIME_s[REV\_SCH\_ID_r] = REV\_SCH\_START\_TIME_r$
- $REV\_SCH\_DURATION_s[REV\_SCH\_ID_r] = REV\_SCH\_DURATION_r$
- $REV\_SCH\_NUM\_BITS\_IDX_s[REV\_SCH\_ID_r] = REV\_SCH\_NUM\_BITS\_IDX_r$
- If PILOT_GATING_USE_RATE is set to '1', the mobile station shall perform the following:
  - The mobile station shall set PILOT_GATING_USE_RATE to '0' and shall start the continuous reverse pilot at the specified action time and, if a F-PDCH is assigned, the mobile station shall start the continuous R-CQICH as defined in [3].
  - If a F-PDCH is not assigned and the Fundamental Channel was previously established prior to transitioning to the *Control Hold Mode*, the mobile station shall start processing F-FCH and start transmitting on R-FCH at the action time of the message. The mobile station shall establish the Fundamental Channel with the same configuration as previously used.

2.6.6.2.5.1.1 Processing of the Forward Supplemental Burst Assignment

A Forward Supplemental Assignment specifies the explicit start time identified by FOR_SCH_START_TIME or the implicit start time (if FOR_SCH_START_TIME_INCL is set to ‘0’), FOR_SCH_DURATION, and SCCL_INDEX of a forward burst assignment. The time interval of duration is specified by FOR_SCH_DURATION (see Table 3.7.3.3.2.37-3) and starts at the time specified by the explicit start time FOR_SCH_START_TIME or the implicit start time (if FOR_SCH_START_TIME_INCL is set to ‘0’). This time interval for a Forward Supplemental Assignment is called the Forward Supplemental Assignment Interval. A value of FOR_SCH_DURATION equal to '1111' indicates infinite duration. The variable $SCCL\_INDEX_S$[FOR_SCH_ID] specifies the rate, QOF index and the Active Set for the Forward Supplemental Channel identified by FOR_SCH_ID for a given Forward Supplemental Assignment. A value of FOR_SCH_DURATION equal to '0000' indicates that the mobile station should stop processing the forward Supplemental Channels at the explicit start time specified by FOR_SCH_START_TIME or the implicit start time (if FOR_SCH_START_TIME_INCL is set to ‘0’). The implicit start time is the time occurring no later than the first 80 ms boundary (relative to System Time) which occurs at least 80 ms after the end of the frame containing the last bit of the *Extended Supplemental Channel Assignment Message* or the action time of the *Universal Handoff Direction Message*.

If the mobile station receives an *Extended Supplemental Channel Assignment* Message with FOR_SCH_CC_INCL set to ‘1’, the mobile station shall begin to use the Forward Supplemental Channel configuration specified by this message at the start time of this Forward Supplemental Assignment.

For each Forward Supplemental Assignment the mobile station shall determine the start time for processing forward supplemental channel as the time for which the following equation holds:

$$(\lfloor t/(START\_TIME\_UNIT_S+1)\rfloor - FOR\_SCH\_START\_TIME_r) \bmod 32 = 0,$$

where t is the System Time in units of 20 ms.

Figure 2.6.6.2.5.1.1-1 illustrates the scenario in which a second Forward Supplemental Assignment is received while the mobile station is processing the forward supplemental channel according to a previously received assignment. Two cases are displayed in Figure 2.6.6.2.5.1.1-1: Case a) where the first assignment extends beyond the start time of the second assignment and Case b) where the first assignment ends before the second one starts.

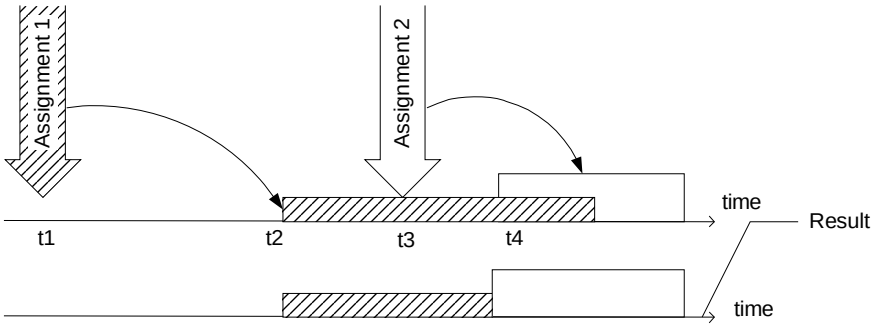

a) "Assignment 1" extends beyond the start time for "Assignment 2"

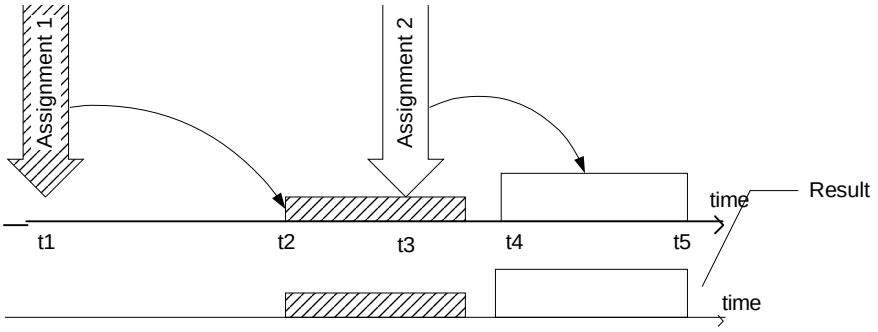

b) "Assignment 1" ends prior to the start time of "Assignment 2"

Figure 2.6.6.2.5.1.1-1. New Supplemental Channel Assignment Received while a Previous Supplemental Channel Assignment is in Progress

Figure 2.6.6.2.5.1.1-2 shows an example scenario in which the mobile station receives a second Forward Supplemental Assignment before it starts processing the supplemental channel according to the first assignment. In this case, the second assignment simply replaces the first assignment.

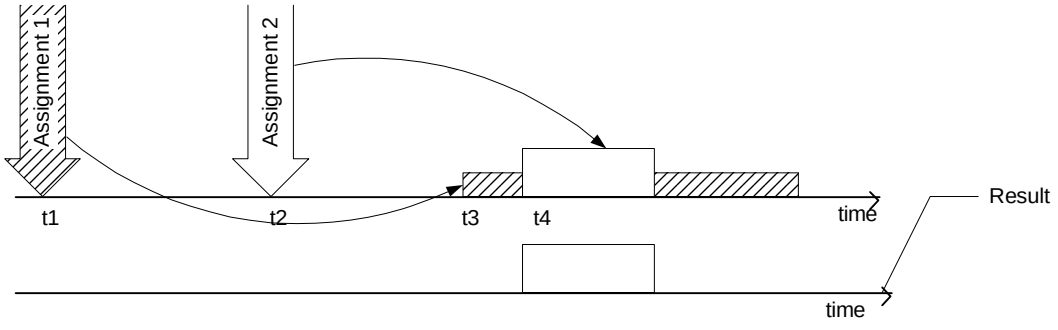

Figure 2.6.6.2.5.1.1-2. New Supplemental Channel Assignment Received before a Previous Supplemental Channel Assignment starts

The mobile station shall set FPC_MODE_S to $FPC\_MODE\_SCH_S$ at the $FOR\_SCH\_START\_TIME_S$ of the forward Supplemental Channel assignment. The mobile station shall set FPC_MODE_S to $FPC\_MODE\_NO\_SCH_S$ at the end of the forward Supplemental Channel assignment.

For each Forward Supplemental Channel assignment corresponding to each Forward Supplemental Channel (identified by FOR_SCH_ID), the mobile station should perform the following:

- If $FOR\_SCH\_DURATION_s[FOR\_SCH\_ID]$ is not equal to '0000', then
  - If the mobile station is currently processing the Forward Supplemental Channel identified by FOR_SCH_ID, then the mobile station should continue processing the Forward Supplemental Channel identified by FOR_SCH_ID according to the Forward Supplemental Assignment previously received for the Forward Supplemental Channel identified by FOR_SCH_ID up to the time specified by the $FOR\_SCH\_START\_TIME_s[FOR\_SCH\_ID]$ (i.e., the mobile station should stop processing the forward supplemental channel identified by FOR_SCH_ID at either the time specified by the start time of the new assignment, or at the time the previously received assignment ends, whichever time is earlier).

    At the time specified by $FOR\_SCH\_START\_TIME_s[FOR\_SCH\_ID]$, the mobile station should start processing the Forward Supplemental Channel identified by FOR_SCH_ID for a duration of time specified by $FOR\_SCH\_DURATION[FOR\_SCH\_ID]_s$ with $FOR\_SCH\_MUX_s[FOR\_SCH\_ID_r]$, $FOR\_SCH\_RC_s[FOR\_SCH\_ID_r]$, $FOR\_SCH\_CODING_s[FOR\_SCH\_ID_r]$, $FOR\_SCH\_FRAME\_LENGTH_s[FOR\_SCH\_ID_r]$, the QOF index, the Supplemental Channel Active Set indexed by $SCCL\_INDEX_s[FOR\_SCH\_ID]$, and number of information bits per frame (or set of number of bits per frame if $FSCH\_VAR\_TABLE\_ID_s[FOR\_SCH\_ID_r]$ is not equal to '000') specified by $N\_FSCH\_BITS\_SET_s[FOR\_SCH\_ID_r][SCCL\_INDEX_r]$.

    If the set of number of bits per frame, $N\_FSCH\_BITS\_SET_s[FOR\_SCH\_ID_r][SCCL\_INDEX_r]$, has more than one member and $F\_INC\_RATE\_ALLOWED_s$ is equal to '0', then the following rule applies for the duration of this assignment:

    + Once the mobile station determines the forward Supplemental Channel number of bits per frame, the number of bits per frame in the subsequent Forward Supplemental Channel frames may be any member of the set $N\_FSCH\_BITS\_SET_s[FOR\_SCH\_ID_r][SCCL\_INDEX_r]$ which is smaller or equal to the number of bits in the current frame.
  - Otherwise, if the mobile station is not currently processing the Forward Supplemental Channel identified by FOR_SCH_ID, then at the time specified by $FOR\_SCH\_START\_TIME_s[FOR\_SCH\_ID]$, the mobile station should start processing the Forward Supplemental Channel identified by FOR_SCH_ID for a duration of time specified by $FOR\_SCH\_DURATION_s[FOR\_SCH\_ID]$ with the QOF index, the Supplemental Channel Active Set indexed by $SCCL\_INDEX_s[FOR\_SCH\_ID]$, and number of bits per frame (or set of number of information bits per frame if $FSCH\_VAR\_TABLE\_ID_s[FOR\_SCH\_ID_r]$ is not equal to '000') specified by $N\_FSCH\_BITS\_SET_s[FOR\_SCH\_ID_r][SCCL\_INDEX_r]$.

If the set of number of bits per frame, $N\_FSCH\_BITS\_SET_s[FOR\_SCH\_ID_r][SCCL\_INDEX_r]$ and $F\_INC\_RATE\_ALLOWED_s$ is equal to '0', has more than one member, then the following rule applies for the duration of this assignment:

+ Once the mobile station determines the forward Supplemental Channel number of bits per frame, the number of bits per frame in the subsequent Forward Supplemental Channel frames may be any member of the set $N\_FSCH\_BITS\_SET_s[FOR\_SCH\_ID_r][SCCL\_INDEX_r]$ which is smaller or equal to the number of bits in the current frame.

- If $FOR\_SCH\_DURATION_s[FOR\_SCH\_ID]$ is equal to '0000', the mobile station should perform the following:

  – If the mobile station is currently processing the Forward Supplemental Channel identified by FOR_SCH_ID, then the mobile station should continue processing the Forward Supplemental Channel identified by FOR_SCH_ID according to the Forward Supplemental Assignment previously received for the Forward Supplemental Channel identified by FOR_SCH_ID up to the time specified by the implicit start time ($FOR\_SCH\_START\_TIME\_INCL_s$ is set to '0') or the explicit start time ($FOR\_SCH\_START\_TIME\_INCL_s$ is set to '1') (i.e., the mobile station should stop processing the forward supplemental channel identified by FOR_SCH_ID at the time specified by the implicit start time or the explicit start time, or at the time the previously received assignment ends, whichever time is earlier). The mobile station should cancel the pending Forward Supplemental Channel assignment if any.

    + If $FOR\_SCH\_START\_TIME\_INCL_s$ is equal to '1', the mobile station should stop processing the Forward Supplemental Channel identified by FOR_SCH_ID at the time specified by $FOR\_SCH\_START\_TIME_s[FOR\_SCH\_ID]$.

    + If $FOR\_SCH\_START\_TIME\_INCL_s$ is equal to '0', the mobile station should stop processing the Forward Supplemental Channel identified by FOR_SCH_ID no later than the first 80 ms boundary (relative to System Time) occurring at least 80 ms after the end of the frame containing the last bit of the *Extended Supplemental Channel Assignment Message* or the action time of the *Universal Handoff Direction Message*.

  – Otherwise, if the mobile station is not currently processing the Forward Supplemental Channel identified by FOR_SCH_ID, the mobile station should cancel the pending Forward Supplemental Channel assignment if any.

2.6.6.2.5.1.2 Processing of the Reverse Supplemental Burst Assignment

A Reverse Supplemental Assignment specifies the explicit start time identified by REV_SCH_START_TIME or the implicit start time (if REV_SCH_START_TIME_INCL is set to '0'), REV_SCH_DURATION, and REV_SCH_NUM_BITS_IDX of a reverse burst assignment. The time interval of duration is specified by REV_SCH_DURATION (see Table 3.7.3.3.2.37-3) and starts at the time specified by the explicit start time REV_SCH_START_TIME or the

implicit start time (if REV_SCH_START_TIME_INCL is set to ‘0’). This time interval for a Reverse Supplemental Assignment is called the reverse supplemental assignment interval. A value of REV_SCH_DURATION equal to '1111' indicates infinite duration. A value of REV_SCH_DURATION equal to '0000' indicates that the mobile station should stop transmitting the reverse Supplemental Channels at the explicit start time specified by REV_SCH_START_TIME or the implicit start time (if REV_SCH_START_TIME_INCL is set to ‘0’). The implicit start time is the time occurring no later than the first 80 ms boundary (relative to System Time) which occurs at least 80 ms after the end of the frame containing the last bit of the *Extended Supplemental Channel Assignment Message* or the action time of the *Universal Handoff Direction Message*.

If the mobile station receives an *Extended Supplemental Channel Assignment Message* with REV_SCH_CC_INCL set to ‘1’, the mobile station shall begin to use the Reverse Supplemental Channel configuration specified by this message at the start time of this Reverse Supplemental Assignment.

For each Reverse Supplemental Assignment the mobile station shall determine the start time for processing reverse supplemental channel as the time for which the following equation holds:

$$(\lfloor t/(\text{START\_TIME\_UNIT}_s+1)\rfloor - \text{REV\_SCH\_START\_TIME}_r) \bmod 32 = 0,$$

where t is the System Time in units of 20 ms.

Figure 2.6.6.2.5.1.1-1 illustrates the scenario in which a second Reverse Supplemental Assignment is received while the mobile station is transmitting on the reverse supplemental channel according to a previously received assignment. Two cases are displayed in Figure 2.6.6.2.5.1.1-1: Case a) where the first assignment extends beyond the start time of the second assignment and Case b) where the first assignment ends before the second one starts.

Figure 2.6.6.2.5.1.1-2 shows an example scenario in which the mobile station receives a second Reverse Supplemental Assignment before it starts transmitting on the supplemental channel according to the first assignment. In this case, the second assignment simply replaces the first assignment.

For each Reverse Supplemental Channel assignment corresponding to each Reverse Supplemental Channel (identified by REV_SCH_ID), the mobile station shall perform the following:

- The mobile station shall determine, $\text{N\_RSCH\_BITS}_s[\text{REV\_SCH\_ID}_r]$, the number of information bits per Reverse Supplemental Channel frame identified by REV_SCH_ID according to the following rules:
  - If $\text{RSCH\_VAR\_TABLE\_ID}_s[\text{REV\_SCH\_ID}_r]$ is equal to ‘000’, then:

- If $USE\_FLEX\_NUM\_BITS_s$ is equal to '0' or if $USE\_FLEX\_NUM\_BITS_s$ is equal to '1' and $RSCH\_NBIT\_TABLE\_ID_s[REV\_SCH\_ID_r]$ is equal to '0000', then the mobile station shall set the number of information bits per frame, $N\_RSCH\_BITS\_SET_s[REV\_SCH\_ID_r]$ and number of CRC bits per frame, $RSCH\_CRC\_LEN\_SET_s[REV\_SCH\_ID_r]$, according to Table 3.7.3.3.2.37-2 using $REV\_SCH\_NUM\_BITS\_IDX_r$ as the index to the table.
- If $USE\_FLEX\_NUM\_BITS_s$ is equal to '1' and $RSCH\_NBIT\_TABLE\_ID_s[REV\_SCH\_ID_r]$ is not equal to '0000', then the mobile station shall set the number of CRC bits per frame, $RSCH\_CRC\_LEN\_SET_s[REV\_SCH\_ID_r]$, according to Table 3.7.5.20-1 using $CRC\_LEN\_IDX_s[RSCH\_NBIT\_TABLE\_ID_s[REV\_SCH\_ID_r]][REV\_SCH\_NUM\_BITS\_IDX_r]$ as the index to the table. The mobile station shall also set the number of information bits per frame, $N\_SCH\_BITS\_SET_s[REV\_SCH\_ID_r]$, to $NUM\_BITS_s[RSCH\_NBIT\_TABLE\_ID_s[REV\_SCH\_ID_r]][REV\_SCH\_NUM\_BITS\_IDX_r]$.

– If $RSCH\_VAR\_TABLE\_ID_s[REV\_SCH\_ID_r]$ is not equal to '000', then:

- The mobile station shall set $N\_RSCH\_BITS\_IDX\_SET_s[REV\_SCH\_ID_r]$, the set of indices to the number of information bits per frame as follows:
  - If $REV\_SCH\_NUM\_BITS\_IDX_r$ is equal to '0000', then $N\_RSCH\_BITS\_IDX\_SET_s[REV\_SCH\_ID_r]$ = **{**$REV\_SCH\_NUM\_BITS\_IDX_r$**},**
  - otherwise, the mobile station shall set (initialize) $N\_RSCH\_BITS\_IDX\_SET_s[REV\_SCH\_ID_r]$ = **{** $REV\_SCH\_NUM\_BITS\_IDX_r$ **}**, and for i=1, …, $REV\_SCH\_NUM\_BITS\_IDX_r$ the mobile station shall add $REV\_SCH\_NUM\_BITS\_IDX_r$ - $VAR\_RSCH\_RATE\_OFFSET_s[REV\_SCH\_ID_r][REV\_SCH\_NUM\_BITS\_IDX_r][i]$ to the set specified by $N\_RSCH\_BITS\_IDX\_SET_s[FOR\_SCH\_ID_r]$
- If $USE\_FLEX\_NUM\_BITS_s$ is equal to '0' or if $USE\_FLEX\_NUM\_BITS_s$ is equal to '1' and $RSCH\_NBIT\_TABLE\_ID_s[REV\_SCH\_ID_r]$ is equal to '0000', then the mobile station shall determine $N\_RSCH\_BITS\_SET_s[REV\_SCH\_ID_r]$, the set of number of information bits per frame as follows. The ith member of the set $N\_RSCH\_BITS\_SET_s[REV\_SCH\_ID_r]$ is obtained using Table 3.7.3.3.2.37-1 and the ith member of the set $N\_RSCH\_BITS\_IDX\_SET_s[REV\_SCH\_ID_r]$ as the index to the table.
- If $USE\_FLEX\_NUM\_BITS_s$ is equal to '1' and $RSCH\_NBIT\_TABLE\_ID_s[FOR\_SCH\_ID_r]$ is not equal to '0000', then
  - the mobile station shall set $N\_RSCH\_BITS\_SET_s[REV\_SCH\_ID_r]$, the set of number of information bits per frame as follows. The ith member of the set $N\_RSCH\_BITS\_SET_s[REV\_SCH\_ID_r]$ is equal to $NUM\_BITS_s[SCH\_NBIT\_TABLE\_ID_s[REV\_SCH\_ID_r]][N\_RSCH\_BITS\_IDX\_SET_s[REV\_SCH\_ID_r][i]]$, where $N\_RSCH\_BITS\_IDX\_SET_s[REV\_SCH\_ID_r][i]$ denotes the ith member of the set $N\_RSCH\_BITS\_IDX\_SET_s[REV\_SCH\_ID_r]$.

- the mobile station shall set $RSCH\_CRC\_LEN\_SET_s[REV\_SCH\_ID_r]$, the set of number of information bits per frame as follows.
  The ith member of the set $RSCH\_CRC\_LEN\_IDX\_SET_s[REV\_SCH\_ID_r]$ is equal to $CRC\_LEN\_IDX_s[RSCH\_NBIT\_TABLE\_ID_s[REV\_SCH\_ID_r]][N\_RSCH\_BITS\_IDX\_SET_s[REV\_SCH\_ID_r][i]]$, where $N\_RSCH\_BITS\_IDX\_SET_s[REV\_SCH\_ID_r][i]$ denotes the ith member of the set $N\_RSCH\_BITS\_IDX\_SET_s[REV\_SCH\_ID_r]$.

- If $REV\_SCH\_DURATION_s[REV\_SCH\_ID]$ is not equal to '0000', then
  - If the mobile station is currently transmitting on the Reverse Supplemental Channel identified by REV_SCH_ID, then the mobile station may continue transmitting on the Reverse Supplemental Channel identified by REV_SCH_ID with the Walsh cover specified by $REV\_WALSH\_ID_s[REV\_SCH\_ID][REV\_SCH\_NUM\_BITS\_IDX[REV\_SCH\_ID_r]]$ according to the current Reverse Supplemental Assignment for the Reverse Supplemental Channel identified by REV_SCH_ID up to the time specified by the $REV\_SCH\_START\_TIME_s[REV\_SCH\_ID_r]$ (i.e., the mobile station shall stop transmitting on the reverse supplemental channel identified by REV_SCH_ID at either the time specified by the start time of the new assignment, or at the time the previously received assignment ends, whichever time is earlier).

    At the time specified by $REV\_SCH\_START\_TIME_s[REV\_SCH\_ID_r]$, the mobile station may start transmitting on the Reverse Supplemental Channel identified by REV_SCH_ID with $REV\_SCH\_MUX_s[REV\_SCH\_ID_r]$, $REV\_SCH\_RC_s[REV\_SCH\_ID_r]$, $REV\_SCH\_CODING_s[REV\_SCH\_ID_r]$, $REV\_SCH\_FRAME\_LENGTH_s[REV\_SCH\_ID_r]$, the Walsh cover specified by $REV\_WALSH\_ID_s[REV\_SCH\_ID][REV\_SCH\_NUM\_BITS\_IDX_s[REV\_SCH\_ID_r]]$ and number of bits per frame (or set of number of information bits per frame if $RSCH\_VAR\_TABLE\_ID_s[REV\_SCH\_ID_r]$ is not equal to '000') specified by $N\_RSCH\_BITS\_SET_s[REV\_SCH\_ID_r]$.

    If the set of number of bits per frame, $N\_RSCH\_BITS\_SET_s[REV\_SCH\_ID_r]$, has more than one member and $R\_INC\_RATE\_ALLOWED_s$ is equal to '0', then the following rule applies for the duration of this assignment:

    - Once the mobile station transmits *n* number of bits per Reverse Supplemental Channel specifies by REV_SCH_ID, where *n* is a member of the set $N\_RSCH\_BITS\_SET_s[REV\_SCH\_ID_r]$, the mobile station shall not transmit at a rate higher than the one specifies by *n* information bits per frame for the duration of the assignment.

- If the mobile station is not currently transmitting on the Reverse Supplemental Channel identified by $REV\_SCH\_ID_r$, then at the time specified by $REV\_SCH\_START\_TIME_s[REV\_SCH\_ID_r]$, the mobile station may start transmitting on the Reverse Supplemental Channel identified by REV_SCH_ID with the Walsh cover specified by $REV\_WALSH\_ID_s[REV\_SCH\_ID][REV\_SCH\_NUM\_BITS\_IDX_s[REV\_SCH\_ID_r]]$ and number of bits per frame (or set of number of information bits per frame if $RSCH\_VAR\_TABLE\_ID_s[REV\_SCH\_ID_r]$ is not equal to '000') specified by $N\_RSCH\_BITS\_SET_s[REV\_SCH\_ID_r]$. If the set of number of bits per frame, $N\_RSCH\_BITS\_SET_s[REV\_SCH\_ID_r]$, has more than one member and $R\_INC\_RATE\_ALLOWED_s$ is equal to '0', then the following rule applies for the duration of this assignment:
  - Once the mobile station transmits *n* number of bits per Reverse Supplemental Channel specifies by REV_SCH_ID, where *n* is a member of the set $N\_RSCH\_BITS\_SET_s[REV\_SCH\_ID_r]$, the mobile station shall not transmit at a rate higher than the one specifies by *n* information bits per frame for the duration of the assignment.

- If $REV\_SCH\_DURATION_s[REV\_SCH\_ID_r]$ is equal to '0000', the mobile station shall perform the followings:
  - If the mobile station is currently transmitting on the Reverse Supplemental Channel identified by REV_SCH_ID, then the mobile station may continue transmitting on the Reverse Supplemental Channel identified by REV_SCH_ID with the Walsh cover specified by $REV\_WALSH\_ID_s[REV\_SCH\_ID][REV\_SCH\_NUM\_BITS\_IDX[REV\_SCH\_ID_r]]$ according to the current Reverse Supplemental Assignment for the Reverse Supplemental Channel identified by REV_SCH_ID up to the time specified by the implicit start time (if $REV\_SCH\_START\_TIME\_INCL_s$ is equal to '1') or the explicit start time (if $REV\_SCH\_START\_TIME\_INCL_s$ is equal to '1') (i.e., the mobile station shall stop transmitting on the reverse supplemental channel identified by REV_SCH_ID at the implicit start time or the explicit start time, or at the time the previously received assignment ends, whichever time is earlier). The mobile station shall cancel the pending Reverse Supplemental Channel assignment if any.
    - If $REV\_SCH\_START\_TIME\_INCL_s$ is equal to '1', the mobile station shall stop transmitting on the Reverse Supplemental Channel identified by $REV\_SCH\_ID_r$ at the time specified by $REV\_SCH\_START\_TIME_s[REV\_SCH\_ID_r]$.
    - If $REV\_SCH\_START\_TIME\_INCL_s$ is equal to '0', the mobile station shall stop transmitting on the Reverse Supplemental Channel identified by $REV\_SCH\_ID_r$ no later than the first 80 ms boundary (relative to System Time) occurring at least 80 ms after the end of the frame containing the last bit of the *Extended Supplemental Channel Assignment Message* or the action time of the *Universal Handoff Direction* Message.

- Otherwise, if the mobile is not currently transmitting on the Reverse Supplemental Channel identified by REV_SCH_ID, the mobile station shall cancel the pending Forward Supplemental Channel assignment if any.

- If $REV\_SCH\_DTX\_DURATION_s$ is not equal to '1111', the mobile station shall perform the following:
  - The mobile station shall maintain a $REV\_SCH\_DTX\_TRANSMISSION\_COUNTER[REV\_SCH\_ID_r]$ counter counting discontinuous transmission time in units of 20 ms as follows:
    - The mobile station shall reset the $REV\_SCH\_DTX\_TRANSMISSION\_COUNTER[REV\_SCH\_ID_r]$ counter to 0:
      - For each Reverse Supplemental Channel assignment corresponding to $REV\_SCH\_ID_r$, at action time specified by the $REV\_SCH\_START\_TIME_r$ field for that assignment, if included; otherwise at the action time of the message.
      - Each time the mobile station resumes transmission on Reverse Supplemental Channelc after discontinued operation on the Reverse Supplemental Channel.
    - The mobile station shall increment the $REV\_SCH\_DTX\_TRANSMISSION\_COUNTER[REV\_SCH\_ID_r]$ counter by one at each 20ms interval for which the mobile station is not transmitting on the Reverse Supplemental Channel during the Reverse Supplemental Channel duration.
  - If the $REV\_SCH\_DTX\_TRANSMISSION\_COUNTER[REV\_SCH\_ID_r]$ counter value exceeds $REV\_SCH\_DTX\_DURATION_s$ (i.e., the mobile station discontinues transmission on the Reverse Supplemental Channel for more than the duration specified by $REV\_SCH\_DTX\_DURATION_s$), the mobile station shall perform the following:
    - The mobile station shall not resume transmission on the Reverse Supplemental Channel corresponding to $REV\_SCH\_ID_r$.
    - The mobile station shall send an indication to each affected service instance indicating that the mobile station has terminated transmission on the supplemental channel corresponding to $REV\_SCH\_ID_r$ due to expiration of the discontinued transmission period.

2.6.6.2.5.2 Processing of Reverse Traffic Channel Handoff Messages

The mobile station sends the following messages on the Reverse Traffic Channel in support of handoff when its transmitter is enabled, following the receipt of a *forward dedicated channel acquired* indication from Layer 2 (see [4]):

1. *Pilot Strength Measurement Message* or *Extended Pilot Strength Measurement Message:* The mobile station shall send an autonomous *Pilot Strength Measurement Message* if $P\_REV\_IN\_USE_s$ is less than seven or *Extended Pilot Strength Measurement Message* if $P\_REV\_IN\_USE_s$ is equal to or greater than seven in assured mode. The mobile station shall send either *Pilot Strength Measurement*

Message or *Extended Pilot Strength Measurement Message* containing measurements consistent with the event whenever any of the following events occur:

- $P\_REV\_IN\_USE_S$ is less than or equal to three or $SOFT\_SLOPE_S$ is equal to '000000' and the strength of a Neighbor Set or Remaining Set pilot is found to be above T_ADD_S.
- $P\_REV\_IN\_USE_S$ is greater than three, $SOFT\_SLOPE_S$ is not equal to '000000', and the strength PS, as specified in 2.6.6.2.2, of any Candidate Set pilot is found to satisfy the following inequality:

$$10 \times \log_{10} PS > \frac{SOFT\_SLOPE_S}{8} \times 10 \times \log_{10} \sum_{i \in A} PS_i + \frac{ADD\_INTERCEPT_S}{2}$$

  where the summation is performed over all pilots currently in the Active Set and a *Pilot Strength Measurement Message* or an *Extended Pilot Strength Measurement Message* carrying this information has not been sent since the last *Extended Handoff Direction Message*, *General Handoff Direction Message* or *Universal Handoff Direction Message* was received.
- $P\_REV\_IN\_USE_S$ is greater than three, $SOFT\_SLOPE_S$ is not equal to '000000', and the strength PS, as specified in 2.6.6.2.2, of any Neighbor Set or Remaining Set pilot is found to satisfy the following inequality:

$$10 \times \log_{10} PS > \max\left(\frac{SOFT\_SLOPE_s}{8} \times 10 \times \log_{10} \sum_{i \in A} PS_i + \frac{ADD\_INTERCEPT_s}{2}, -\frac{T\_ADD_s}{2}\right)$$

  where the summation is performed over all pilots currently in the Active Set.
- $P\_REV\_IN\_USE_S$ is less than or equal to three or $SOFT\_SLOPE_S$ is equal to '000000', the strength of a Candidate Set pilot exceeds the strength of an Active Set pilot by $T\_COMP_S \times 0.5$ dB, and a *Pilot Strength Measurement Message* carrying this information has not been sent since the last *Extended Handoff Direction Message*, *General Handoff Direction Message* or *Universal Handoff Direction Message* was received.
- $P\_REV\_IN\_USE_S$ is greater than three, $SOFT\_SLOPE_S$ is not equal to '000000', and the strength of a Candidate Set pilot exceeds the strength of an Active Set pilot by $T\_COMP_S \times 0.5$ dB and satisfies the following inequality:

$$10 \times \log_{10} PS > \frac{SOFT\_SLOPE_S}{8} \times 10 \times \log_{10} \sum_{i \in A} PS_i + \frac{ADD\_INTERCEPT_S}{2}$$

  where the summation is performed over all pilots currently in the Active Set and a *Pilot Strength Measurement Message* or an *Extended Pilot Strength Measurement Message* carrying this information has not been sent since the last *Extended Handoff Direction Message*, *General Handoff Direction Message* or *Universal Handoff Direction Message* was received.

- The handoff drop timer of an Active Set pilot has expired and a *Pilot Strength Measurement Message* or an *Extended Pilot Strength Measurement Message* carrying this information has not been sent since the last *Extended Handoff Direction Message, General Handoff Direction Message, or Universal handoff Direction Message* was received.
- A Candidate Set pilot has been autonomously promoted to the Active Set (see 2.6.6.2.6.1), and an *Extended Pilot Strength Measurement Message* carrying this information has not been sent since the last *Extended Handoff Direction Message*, *General Handoff Direction Message*, or *Universal Handoff Direction Message* was received.

2. *Handoff Completion Message* or *Extended Handoff Completion Message:* The mobile station shall send a *Handoff Completion Message* if $P\_REV\_IN\_USE_s$ is less than seven or an *Extended Handoff Completion Message* if $P\_REV\_IN\_USE_s$ is equal to or greater than seven in assured mode as follows:
   - If the handoff message (*Extended Handoff Direction Message, General Handoff Direction Message* or *Universal Handoff Direction Message*) specifies a soft handoff, the mobile station shall send the *Handoff Completion Message* if $P\_REV\_IN\_USE_s$ is less than seven or an *Extended Handoff Completion Message* if $P\_REV\_IN\_USE_s$ is equal to or greater than seven within T_{56m} seconds after the action time of the received handoff message.
   - If the handoff message (*Extended Handoff Direction Message, General Handoff Direction Message* or *Universal Handoff Direction Message*) specifies a hard handoff without return on failure (see 2.6.6.2.8.1), the mobile station shall send the *Handoff Completion Message* if $P\_REV\_IN\_USE_s$ is less than seven or an *Extended Handoff Completion Message* if $P\_REV\_IN\_USE_s$ is equal to or greater than seven within T_{73m} seconds after the action time of the received handoff message.
   - If the handoff message (*General Handoff Direction Message* or *Universal Handoff Direction Message*) specifies a hard handoff with return on failure (see 2.6.6.2.8.2), the mobile station shall send the *Handoff Completion Message* if $P\_REV\_IN\_USE_s$ is less than seven or an *Extended Handoff Completion Message* if $P\_REV\_IN\_USE_s$ is equal to or greater than seven within T_{56m} seconds after mobile station declares the handoff to be successful (see 2.6.6.2.8.2).

3. *Candidate Frequency Search Report Message:* The mobile station shall send a *Candidate Frequency Search Report Message* in assured mode, whenever any of the following events occur:
   - $RETURN\_IF\_HANDOFF\_FAIL_s$ is equal to '1', and a handoff attempt is unsuccessful (see 2.6.6.2.8.2). In this case, the mobile station shall send a *Candidate Frequency Search Report Message* within T_{56m} seconds after completing a search of all pilots in the Candidate Frequency Search Set and resuming the use of the Serving Frequency Active Set (see 2.6.6.2.8.2.1).

- RETURN_IF_HANDOFF_FAIL$_S$ is equal to '1', an inter-frequency handoff attempt is unsuccessful (see 2.6.6.2.8.2), and PERIODIC_SEARCH$_S$ is equal to '1'. In this case, the mobile station shall send a *Candidate Frequency Search Report Message* in a search period if the conditions specified in 2.6.6.2.8.3.2 are met.
- The mobile station receives a *Candidate Frequency Search Request Message* or a *Candidate Frequency Search Control Message* with SEARCH_TYPE set to '01'. If none of the conditions requiring the mobile station to send a *Mobile Station Reject Order* is true (see 2.6.6.2.5.1), the mobile station shall send a *Candidate Frequency Search Report Message,* as described in 2.6.6.2.8.3.1 and 2.6.6.2.10.1.
- The mobile station receives a *Candidate Frequency Search Request Message* or *Candidate Frequency Search Control Message* with SEARCH_TYPE set to '11', SEARCH_MODE$_S$ is equal to '0000' and the Candidate Frequency Search Set is not empty. If none of the conditions requiring the mobile station to send a *Mobile Station Reject Order* is true (see 2.6.6.2.5.1), the mobile station shall send a *Candidate Frequency Search Report Message* in a search period if the conditions specified in 2.6.6.2.8.3.2 are met.

4. *Periodic Pilot Strength Measurement Message:* The mobile station shall send a *Periodic Pilot Strength Measurement Message* in unassured mode, as specified in 2.6.6.2.5.1 and 2.6.6.2.12.

5. *Pilot Strength Measurement Mini Message*: If the mobile station supports the Mobile Assisted Burst operation capability, the mobile station shall send this message while processing any Supplemental Channel, according to the following:

   - The mobile station shall transmit a *Pilot Strength Measurement Mini Message* for a pilot *p* in the Active Set on the r-dsch logical channel whenever all of the following conditions are true:
     - ORDER_FLAG$_S$ is equal to '1'.
     - The pilot *p* in the Active Set has a received signal strength that is greater than the signal strength of another pilot in the Active Set by PS_MIN_DELTA$_S$, in units of 0.5 dB, at the current time and has been for ORDER_INTERVAL$_S$ most recent successive 20 ms frame intervals since this pilot was last reported in a rank order based *Pilot Strength Measurement Mini Message*.
     - The rank order of pilot *p* has changed.
   - If PERIODIC_FLAG$_S$ is equal to '1', the mobile station shall transmit a *Pilot Strength Measurement Mini Message* within PERIODIC_INTERVAL$_S$ 20 ms frame intervals on the r-dsch for each of the *n* pilots in the Active Set with the largest signal strengths, where *n* = (min (NUM_PILOTS, the number of pilots in the Active Set)), whenever the following condition is true:
     - The mobile station has not transmitted another *Pilot Strength Measurement Mini Message* for the corresponding pilot during the last PERIODIC_INTERVAL$_S$ 20 ms frame intervals.

- If $THRESHOLD\_FLAG_s$ is equal to '1', the mobile station shall transmit a *Pilot Strength Measurement Mini Message* for pilot *p* on the r-dsch logical channel whenever all of the following conditions are true:
  - The mobile station has not transmitted a previous *Pilot Strength Measurement Mini Message* for pilot *p* within the most recent $THRESHOLD\_INTERVAL_s$ 20 ms frames intervals.
  - Pilot *p* is in the Active Set.
  - The signal strength of pilot *p* is greater than $PS\_CEILING\_HIGH_s$ and the signal strength of pilot *p* was less than or equal to $PS\_CEILING\_LOW_s$ at any time since the mobile station last sent a *Pilot Strength Measurement Mini Message* for pilot *p*; or the signal strength of pilot *p* is less than $PS\_FLOOR\_LOW_s$ and the signal strength for pilot *p* was greater than or equal to $PS\_FLOOR\_HIGH_s$ at any time since the last time that the mobile station sent a *Pilot Strength Measurement Mini Message* for pilot *p*.

2.6.6.2.6 Set Maintenance

2.6.6.2.6.1 Maintenance of the Active Set

The mobile station shall support a maximum Active Set size of N_{6m} pilots. The mobile station shall track the pilot strengths of all pilots in the Active Set.

When the mobile station is first assigned Forward Traffic Channels, the mobile station shall initialize the Active Set to contain the pilots associated with the assigned Forward Traffic Channels. When the mobile station processes an *Extended Handoff Direction Message*, a *General Handoff Direction Message* or *Universal Handoff Direction Message*, then at the action time of the message the mobile station shall replace the pilots in the Active Set with the pilots listed in the message.

If the call rescue allowed timer is enabled, then the mobile station shall autonomously add one or more Candidate Set pilots whose strength exceeds T_ADD_s to the Active Set, beginning with the strongest, provided that:

- the NGHBR_RESQ_CONFIGURED field of the NGHBR_REC for the corresponding pilot is equal to '1', and
- the resulting Active Set size does not exceed N_{6m} pilots.

When autonomously adding Rescue Channel pilots to the Active Set, the mobile station may autonomously drop one or more of the existing pilots in the Active Set, beginning with the weakest, to allow for adding pilots when the Active Set is full.

2.6.6.2.6.2 Maintenance of the Candidate Set

The mobile station shall support a maximum Candidate Set size of N_{7m} pilots.

When the mobile station is first assigned a Forward Traffic Channel, the mobile station shall initialize the Candidate Set to contain no pilots. The mobile station shall adjust the Candidate Set whenever any of the following events occur:

- If the mobile station detects that the strength of a Neighbor Set pilot or a Remaining Set pilot exceeds T_ADD_S, the mobile station shall add the pilot to the Candidate Set.
- If the mobile station processes an *Extended Handoff Direction Message*, a *General Handoff Direction Message* or a *Universal Handoff Direction Message* which does not list a pilot in the current Active Set, and the handoff drop timer corresponding to that pilot has not expired at the action time of the message, the mobile station shall add the pilot to the Candidate Set at the action time of the message.
- If the mobile station autonomously drops an existing pilot in the Active Set (see 2.6.6.2.6.1), and the handoff drop timer corresponding to that pilot has not expired, the mobile station shall add the pilot to the Candidate Set.
- If $P\_REV\_IN\_USE_S$ is greater than three, and $SOFT\_SLOPE_S$ is not equal to '000000', the mobile station shall perform the following:
  - If the mobile station processes a *General Handoff Direction Message* or a *Universal Handoff Direction Message* which does not list a pilot in the current Active Set, the handoff drop timer corresponding to that pilot has expired at the action time of the message, and that pilot is found to be above T_DROP_S, the mobile station shall add the pilot to the Candidate Set at the action time of the message.
  - If the mobile station autonomously drops an existing pilot in the Active Set (see 2.6.6.2.6.1), the handoff drop timer corresponding to that pilot has expired, and that pilot is found to be above T_DROP_S, the mobile station shall add the pilot to the Candidate Set.
- If the mobile station processes an *Extended Handoff Direction Message*, a *General Handoff Direction Message* or *Universal Handoff Direction Message*, which lists a pilot in the current Candidate Set, the mobile station shall delete the pilot from the Candidate Set at the action time of the message.
- If the handoff drop timer corresponding to a Candidate Set pilot expires, the mobile station shall delete the pilot from the Candidate Set.
- If the mobile station autonomously adds a Candidate Set pilot to the Active Set (see 2.6.6.2.6.1), the mobile station shall delete the pilot from the Candidate Set.
- If the mobile station adds a pilot to the Candidate Set, and the resulting Candidate Set size exceeds N_{7m}, the mobile station shall delete from the Candidate Set the pilot whose handoff drop timer is closest to expiration. If more than one such pilot exists, the mobile station shall delete one such pilot that has the lowest strength. If no pilot in the Candidate Set has an enabled handoff drop timer, the mobile station shall delete from the Candidate Set the pilot that has the lowest strength.

2.6.6.2.6.3 Maintenance of the Neighbor Set

The mobile station shall support a Neighbor Set size of at least N_{8m} pilots.

When the mobile station is first assigned a Forward Traffic Channel, the mobile station shall initialize the Neighbor Set to contain all the pilots specified in the most recently received *Neighbor List Message*, *Extended Neighbor List Message* or *General Neighbor List Message*.

The mobile station shall maintain a counter, AGE_S, for each pilot in the Neighbor Set. The mobile station shall initialize this counter to zero when it moves the pilot from the Active Set or the Candidate Set to the Neighbor Set. The mobile station shall initialize this counter to $NGHBR\_MAX\_AGE_S$ when it moves the pilot from the Remaining Set to the Neighbor Set. The mobile station shall increment AGE_S for each pilot in the Neighbor Set upon receipt of a *Neighbor List Update Message* or an *Extended Neighbor List Update Message*. When the mobile station is first assigned to a Forward Traffic Channel, the mobile station shall set AGE_S for each pilot in the Neighbor Set to $NGHBR\_MAX\_AGE_S$.

The mobile station shall adjust the Neighbor Set whenever any of the following events occur:

- If the mobile station receives a *Neighbor List Update Message* or an *Extended Neighbor List Update Message*, it shall perform the following:
  - Increment AGE_S for each pilot in the Neighbor Set.
  - Delete from the Neighbor Set all pilots whose AGE_S exceeds $NGHBR\_MAX\_AGE_S$.
  - Add to the Neighbor Set each pilot named in the message, if it is not already a pilot of the Active Set, Candidate Set, or Neighbor Set. If the mobile station can store in the Neighbor Set only k additional pilots, and more than k new pilots were sent in the *Neighbor List Update Message* or the *Extended Neighbor List Update Message*, the mobile station shall store the first k new pilots listed in the message.
- If the handoff drop timer of a pilot in the Candidate Set expires, the mobile station shall add the pilot to the Neighbor Set.
- If $P\_REV\_IN\_USE_S$ is less than or equal to three or $SOFT\_SLOPE_S$ is equal to '000000', the mobile station shall perform the following:
  - If the mobile station processes an *Extended Handoff Direction Message*, a *General Handoff Direction Message*, or *a Universal Handoff Direction Message* in which a pilot in the Active Set is not listed, and the handoff drop timer corresponding to the pilot has expired, the mobile station shall add the pilot to the Neighbor Set.
  - If the mobile station autonomously drops an existing pilot in the Active Set (see 2.6.6.2.6.1) and the handoff drop timer corresponding to the pilot has expired, the mobile station shall add the pilot to the Neighbor Set.
- If $P\_REV\_IN\_USE_S$ is greater than three, and $SOFT\_SLOPE_S$ is not equal to '000000', the mobile station shall perform the following:

- If the mobile station processes an *Extended Handoff Direction Message*, a *General Handoff Direction Message*, or a *Universal Handoff Direction Message* which does not list a pilot in the current Active Set, the handoff drop timer corresponding to that pilot has expired, and that pilot is found to be below T_DROP_S, the mobile station shall add the pilot to the Neighbor Set.
- If the mobile station autonomously drops an existing pilot in the Active Set (see 2.6.6.2.6.1), the handoff drop timer corresponding to that pilot has expired, and that pilot is found to be below T_DROP_S, the mobile station shall add the pilot to the Neighbor Set.

- If the mobile station adds a pilot to the Candidate Set, and the resulting Candidate Set size exceeds the size supported by the mobile station, the mobile station shall add the deleted Candidate Set pilot to the Neighbor Set (see 2.6.6.2.6.2).
- If the mobile station detects that the strength of a Neighbor Set pilot exceeds T_ADD_S, the mobile station shall delete the pilot from the Neighbor Set.
- If the mobile station processes an *Extended Handoff Direction Message*, a *General Handoff Direction Message* or *a Universal Handoff Direction Message* which lists a pilot in the current Neighbor Set, the mobile station shall delete the pilot from the Neighbor Set.
- If the mobile station adds a pilot to the Neighbor Set, and the resulting Neighbor Set size exceeds the size supported by the mobile station, the mobile station shall delete from the Neighbor Set the pilot whose AGE_S is the largest. If more than one such pilot exists, the mobile station shall delete one such pilot that has the lowest strength.

2.6.6.2.7 Soft Handoff

2.6.6.2.7.1 Forward Traffic Channel Processing

All Forward Traffic Channels associated with pilots in the Active Set of the mobile station carry identical modulation symbols with the exception of the power control subchannel (see [2]).

When the Active Set contains more than one pilot, the mobile station should provide diversity combining of the associated Forward Traffic Channels. The mobile station shall provide for differential propagation delays from zero to at least 150 µs.

2.6.6.2.7.2 Reverse Traffic Channel Power Control During Soft Handoff

The *Extended Handoff Direction Message*, a *General Handoff Direction Message* or a *Universal Handoff Direction Message* identifies sets of Forward Fundamental Channels or Forward Dedicated Control Channels that carry identical closed loop power control subchannels. A set consists of one or more Forward Fundamental Channels or Forward Dedicated Control Channels with identical power control information.

The *Universal Handoff Direction Message* identifies sets of Forward Common Power Control Channels that carry identical closed loop power control subchannels. A set consists of one

or more Forward Common Power Control Channels with identical power control information.

Each Rescue Channel that has been autonomously promoted to the Active Set as part of Call Rescue Soft Handoff (see 2.6.6.2.13) shall form its own set. The mobile station shall not diversity combine the closed loop power control subchannel of any Rescue Channel with any other Forward Fundamental Channel until directed otherwise by an *Extended Handoff Direction Message*, *General Handoff Direction Message*, or *Universal Handoff Direction Message*.

In each power control group containing valid power control bits (see [2]), the mobile station should provide diversity combining of the identical closed loop power control subchannels and shall obtain at most one power control bit from each set of identical closed loop power control subchannels. The mobile station should only combine reliable power control bits (see [11]) as follows:

- If the reliable power control bits obtained from all sets are equal to '0', the mobile station shall increase its power as specified in [2].
- If the reliable power control bit obtained from any set is equal to '1', the mobile station shall decrease its power as specified in [2].

2.6.6.2.7.3 Starting Periodic Search following Soft Handoff

If the PERIODIC SEARCH_S is equal to '1', a periodic search is not already in progress, and the Frequency Assignment after handoff is different from the Candidate Frequency (CDMABAND_S is not equal to CF_CDMABAND_S or CDMACH_S is not equal to CF_CDMACH_S), the mobile station shall perform the following:

- The mobile station shall set $\text{ALIGN\_TIMING\_USED}_S$ to '0' and SEARCH_OFFSET_S to '000000'.
- The mobile station shall start a periodic search as described in 2.6.6.2.8.3.2.

2.6.6.2.8 CDMA-to-CDMA Hard Handoff

The base station directs the mobile station to perform a CDMA-to-CDMA hard handoff by sending an *Extended Handoff Direction Message*, a *General Handoff Direction Message* or *a Universal Handoff Direction Message* in which the mobile station is transitioned between disjoint sets of base stations, different Frequency Assignments, or different frame offsets. When the base station uses a *Extended Handoff Direction Message*, a *General Handoff Direction Message, MEID Universal Handoff Direction Message* or *a Universal Handoff Direction Message* to direct the mobile to a channel with flexible channel spacing between the forward and reverse channels, the base station extends these message using the *General Extension Message* and include channel records that specify the forward and reverse frequencies to be used by the mobile station for handoff. The mobile station shall process this message as specified in section 2.6.18. If $\text{RETURN\_IF\_HANDOFF\_FAIL}_S$ is equal to '0', the mobile station performs the actions described in 2.6.6.2.8.1. If $\text{RETURN\_IF\_HANDOFF\_FAIL}_S$ is equal to '1', the mobile station performs the actions described in 2.6.6.2.8.2.

2.6.6.2.8.1 Hard Handoff without Return on Failure

At the action time specified in the *Extended Handoff Direction Message*, the *General Handoff Direction Message* or *Universal Handoff Direction Message* the mobile station shall disable its transmitter, reset the fade timer specified in 2.6.4.1.8, suspend incrementing TOT_FRAMES_S, BAD_FRAMES_S, $DCCH\_TOT\_FRAMES_S$, and $DCCH\_BAD\_FRAMES_S$ if applicable as specified in 2.6.4.1.1, and tune to the assigned Forward Traffic Channel. The mobile station shall perform acquisition of the pilots in the new Active Set.

If a periodic Serving Frequency pilot report procedure is in progress, the mobile station shall abort it (see 2.6.6.2.12).

The mobile station shall begin monitoring the assigned Forward Traffic Channel within the time specified below:

- If the *Extended Handoff Direction Message*, *General Handoff Direction Message* or *Universal Handoff Direction Message* specifies a CDMA Frequency Assignment different from the Serving Frequency and an Active Set containing pilots with pilot PN sequence offsets identical to those of the pilots in the Serving Frequency Active Set, the mobile station shall begin monitoring the assigned Forward Traffic Channel within T_{60m} seconds after the action time.
- If the *Extended Handoff Direction Message*, *General Handoff Direction Message* or *Universal Handoff Direction Message* specifies a CDMA Frequency Assignment different from the Serving Frequency and an Active Set containing a pilot with pilot PN sequence offset not equal to that of any pilot in the Serving Frequency Active Set, the mobile station shall begin monitoring the assigned Forward Traffic Channel within T_{61m} seconds after the action time.
- If the *Extended Handoff Direction Message*, *General Handoff Direction Message* or *Universal Handoff Direction Message* specifies a CDMA-to-CDMA hard handoff without changing the CDMA Frequency Assignment, the mobile station shall begin monitoring the assigned Forward Traffic Channel within T_{62m} seconds after the action time.

If the Target Frequency is the same as the Candidate Frequency ($TF\_CDMABAND_S$ is equal to $CF\_CDMABAND_S$, and TF_CDMACH_S is equal to CF_CDMACH_S) and is different from the Serving Frequency ($TF\_CDMABAND_S$ is not equal to $SF\_CDMABAND_S$, or TF_CDMACH_S is not equal to SF_CDMACH_S), the mobile station shall perform the following:

- If applicable, the mobile station shall replace its Neighbor Set with its Candidate Frequency Neighbor Set, excluding the pilots in its Active Set. When the mobile station adds a pilot from its Candidate Frequency Neighbor Set to its Active Set, it shall maintain $SEARCH\_PRIORITY_S$, $SRCH\_WIN\_NGHBR_S$, and $SRCH\_OFFSET\_NGHBR_S$ associated with the pilot.
- The mobile station shall set $PILOT\_INC_S$ to $CF\_PILOT\_INC_S$, $SRCH\_WIN\_N_S$ to $CF\_SRCH\_WIN\_N_S$, and $SRCH\_WIN\_R_S$ to $CF\_SRCH\_WIN\_R_S$.

- The mobile station shall set $SEARCH\_PRIORITY\_INCL_S$ to $CF\_SEARCH\_PRIORITY\_INCL_S$, $SRCH\_OFFSET\_INCL_S$ to $CF\_SRCH\_OFFSET\_INCL_S$, and $SRCH\_WIN\_NGHBR\_INCL_S$ to $CF\_SRCH\_WIN\_NGHBR\_INCL_S$.

If a F-CPCCH is not assigned, the mobile station shall perform the following:

- After the action time, upon receiving a period of ($N_{11m.} \times 20$) ms with sufficient signal quality on the physical channel corresponding to $FPC\_PRI\_CHAN_S$ on the assigned Forward Traffic Channel, the mobile station shall re-enable its transmitter. The mobile station shall transmit the Traffic Channel Preamble, as described in [2], followed by a Handoff Completion Message or Extended Handoff Completion Message.
- After the action time, upon receiving a period of ($N_{3m.} \times 20$) ms with sufficient signal quality on the physical channel corresponding to FPC_PRI_CHANs, the mobile station shall resume incrementing TOT_FRAMES_S, BAD_FRAMES_S, $DCCH\_TOT\_FRAMES_S$, and $DCCH\_BAD\_FRAMES_S$ if applicable as specified in 2.6.4.1.1.

If a F-CPCCH is assigned, the mobile station shall perform the following:

- After the action time, upon receiving a period of ($N_{19m} \times 1.25$) ms with sufficient signal quality on the Forward Common Power Control Subchannels assigned to this mobile station, the mobile station shall re-enable its transmitter. The mobile station shall transmit the Traffic Channel Preamble, as described in [2], followed by an *Extended Handoff Completion Message*. The mobile station shall also transmit the Reverse Channel Quality Indicator Channel as described in [2] and [3].

If the $PERIODIC\ SEARCH_S$ is equal to '1', a periodic search is not already in progress, and the Frequency Assignment after handoff is different from the Candidate Frequency ($CDMABAND_S$ is not equal to $CF\_CDMABAND_S$ or $CDMACH_S$ is not equal to CF_CDMACH_S), the mobile station shall perform the following:

- The mobile station shall set $ALIGN\_TIMING\_USED_S$ to '0' and $SEARCH\_OFFSET_S$ to '000000'.
- The mobile station shall start a periodic search as described in 2.6.6.2.8.3.2.

2.6.6.2.8.2 Hard Handoff with Return on Failure

At the action time specified in the *General Handoff Direction Message* or *Universal Handoff Direction Message*, the mobile station shall perform the following:

- The mobile station shall stop processing the Forward Fundamental Channel, the Forward Dedicated Control Channel, the Forward Supplemental Code Channels (if any), and the Forward Supplemental Channels (if any).
- The mobile station shall stop transmitting on the Reverse Fundamental Channel, on the Reverse Dedicated Control Channel, and on the Reverse Supplemental Code Channels (if any), and on the Reverse Supplemental Channels (if any).
- The mobile station shall disable the fade timer (see 2.6.4.1.8) and the handoff drop timers corresponding to the Serving Frequency Active Set and Candidate Set (see 2.6.6.2.3), and shall suspend incrementing TOT_FRAMES_S, BAD_FRAMES_S, $DCCH\_TOT\_FRAMES_S$, and $DCCH\_BAD\_FRAMES_S$ if applicable (see 2.6.4.1.1).

- The mobile station shall lock the accumulation of valid level changes in the closed loop mean output power and shall ignore received power control bits related to the period that the transmitter is disabled (see [2]).
- If the Serving Frequency is different from the Target Frequency (SF_CDMACH_S is not equal to TF_CDMACH_S or $SF\_CDMABAND_S$ is not equal to $TF\_CDMABAND_S$), the mobile station shall set $CDMACH_S$ to TF_CDMACH_S and $CDMABAND_S$ to $TF\_CDMABAND_S$, and shall tune to the Target Frequency.

The mobile station shall not change its time reference (see [2]) until the handoff is successfully completed (as described later in this section) or the mobile station resumes using the Serving Frequency Active Set (as described in 2.6.6.2.8.2.1).

The mobile station shall maintain a *handoff* timer. The mobile station shall set the expiration time for the handoff timer to ($0.08 \times TF\_WAIT\_TIME_S$) seconds and enable the timer at the action time of the *General Handoff Direction Message* or *Universal Handoff Direction Message*.

The mobile station shall perform the following actions:

- If the Target Frequency is different from the Serving Frequency ($TF\_CDMABAND_S$ is not equal to $SF\_CDMABAND_S$, or TF_CDMACH_S is not equal to SF_CDMACH_S), the mobile station shall measure the mean input power on the Target Frequency (*target_freq_pwr*, in dBm/1.23 MHz) and may use *target_freq_pwr* along with the measurement of the average input power on the Serving Frequency (*avg_serving_freq_pwr*, in dBm/1.23 MHz) in the handoff procedure. The mobile station may declare the handoff attempt to be unsuccessful if all of the following conditions are true:
  - $DIFF\_RX\_PWR\_THRESH_S$ is not equal to '00000',
  - the mobile station has been measuring the received power on the Serving Frequency for at least the last N_{12m} frames, and
  - (*target_freq_pwr* - *avg_serving_freq_pwr*) is less than ($-30 + 2 \times DIFF\_RX\_PWR\_THRESH_S$) dB.

  If the mobile station declares the handoff attempt to be unsuccessful, it shall restore the configuration to what it was before the handoff attempt (see 2.6.6.2.5.1) and send a *Candidate Frequency Search Report Message* as described in 2.6.6.2.8.2.1.
- The mobile station shall measure E_c/I_o for each pilot in the Active Set using the procedures specified in 2.6.6.2.2, if any of the following conditions is true:
  - the Target Frequency is the same as the Serving Frequency ($TF\_CDMABAND_S$ is equal to $SF\_CDMABAND_S$, and TF_CDMACH_S is equal to SF_CDMACH_S),
  - the mobile station does not use the power measurements in the handoff procedure,
  - $DIFF\_RX\_PWR\_THRESH_S$ is equal to '00000',

– the mobile station has not been measuring the received power on the Serving Frequency for at least the last N_{12m} frames, or

– (*target_freq_pwr* - *avg_servng_freq_pwr*) is not less than (-30 + 2 × DIFF_RX_PWR_THRESH$_S$) dB.

If the mobile station measures E_C/I_O for pilots in the Active Set, it shall compare the sum of the measured E_C/I_O for all pilots with the minimum total pilot E_C/I_0 threshold (MIN_TOTAL_PILOT_EC_I0$_S$).

– If MIN_TOTAL_PILOT_EC_I0$_S$ is not equal to '00000', and (-20 × $\log_{10}$ $(E_C/I_O)_{total}$) is greater than MIN_TOTAL_PILOT_EC_I0$_S$, where $(E_C/I_0)_{total}$ is the sum of the measured E_C/I_O for the pilots in the Active Set, the mobile station shall declare the handoff attempt to be unsuccessful, and shall perform the following:

  + If COMPLETE_SEARCH$_S$ is equal to '1', and the Target Frequency is the same as the Candidate Frequency (TF_CDMABAND$_S$ is equal to CF_CDMABAND$_S$, and TF_CDMACH$_S$ is equal to CF_CDMACH$_S$) and is different from the Serving Frequency (TF_CDMABAND$_S$ is not equal to SF_CDMABAND$_S$, or TF_CDMACH$_S$ is not equal to SF_CDMACH$_S$), the mobile station shall measure the strength of each pilot in its Candidate Frequency Search Set using the procedures specified in 2.6.6.2.2; otherwise, the mobile station shall end the search.

  + The mobile station shall then restore its configuration to what it was before the handoff attempt (see 2.6.6.2.5.1) and send a *Candidate Frequency Search Report Message* as described in 2.6.6.2.8.2.1.

– If MIN_TOTAL_PILOT_EC_IO$_S$ is equal to '00000', or (- 20 × $\log_{10}$ $(E_C/I_O)_{total}$) is not less than MIN_TOTAL_PILOT_EC_IO$_S$, where $(E_C/I_O)_{total}$ is the sum of the measured E_C/I_O for the pilots in the Active Set, the mobile station shall attempt to demodulate the Forward Traffic Channel(s). If the Active Set contains more than one pilot, the mobile station shall perform the actions specified in 2.6.6.2.7. If the Target Frequency is the same as the Candidate Frequency (TF_CDMABAND$_S$ is equal to CF_CDMABAND$_S$, and TF_CDMACH$_S$ is equal to CF_CDMACH$_S$), and is different from the Serving Frequency (TF_CDMABAND$_S$ is not equal to SF_CDMABAND$_S$, or TF_CDMACH$_S$ is not equal to SF_CDMACH$_S$), the mobile station shall measure the strength of each pilot in its Candidate Frequency Search Set using the procedures specified in 2.6.6.2.2, and the mobile station shall wait for the first of the following events to occur:

  + If the handoff timer expires, the mobile station shall declare the handoff attempt to be unsuccessful, and perform the following:

- o If $COMPLETE\_SEARCH_S$ is equal to '1', and if the Target Frequency is the same as the Candidate Frequency ($TF\_CDMABAND_S$ is equal to $CF\_CDMABAND_S$, and TF_CDMACH_S is equal to CF_CDMACH_S) and is different from the Serving Frequency ($TF\_CDMABAND_S$ is not equal to $SF\_CDMABAND_S$, or TF_CDMACH_S is not equal to SF_CDMACH_S), and the mobile station has not completed the search of all pilots in its Candidate Frequency Search Set, then it shall complete the search, i.e., it shall obtain at least one measurement of the strength of each pilot in its Candidate Frequency Search Set, using the search procedures specified in 2.6.6.2.8.3.
- o Otherwise, the mobile station shall end the search.

The mobile station shall then restore its configuration to what it was before the handoff attempt (see 2.6.6.2.5.1) and send a *Candidate Frequency Search Report Message* as described in 2.6.6.2.8.2.1.

+ If a F-CPCCH is not assigned, and the mobile station receives a period of ($N_{11m} \times 20$) ms with sufficient signal quality on the physical channel corresponding to $FPC\_PRI\_CHAN_S$, or if a F-CPCCH is assigned, and the mobile station receives a period of ($N_{19m} \times 1.25$) ms with sufficient signal quality on the Forward Common Power Control Subchannels assigned to this mobile station, then, the mobile station shall declare the handoff attempt to be successful, and perform the following:

- o The mobile station shall disable the handoff timer.
- o If $TF\_RESET\_L2_S$ is equal to '1', Layer 3 shall send a L2-Supervision.Request primitive to Layer 2 to reset the acknowledgment procedures as specified in [4].
- o If $TF\_RESET\_FPC_S$ is equal to '1', the mobile station shall initialize the Forward Traffic Channel power control counters as specified in 2.6.4.1.1.1.
- o If the Target Frequency is the same as the Candidate Frequency ($TF\_CDMABAND_S$ is equal to $CF\_CDMABAND_S$, and TF_CDMACH_S is equal to CF_CDMACH_S) and is different from the Serving Frequency ($TF\_CDMABAND_S$ is not equal to $SF\_CDMABAND_S$, or TF_CDMACH_S is not equal to SF_CDMACH_S), the mobile station shall perform the following:
  - ◊ If applicable, the mobile station shall replace its Neighbor Set with its Candidate Frequency Neighbor Set, excluding the pilots in its Active Set. When the mobile station adds a pilot from its Candidate Frequency Neighbor Set to its Active Set, it shall maintain $SEARCH\_PRIORITY_S$, $SRCH\_WIN\_NGHBR_S$, and $SRCH\_OFFSET\_NGHBR_S$ associated with the pilot.

- ◊ The mobile station shall set $PILOT\_INC_S$ to $CF\_PILOT\_INC_S$, $SRCH\_WIN\_N_S$ to $CF\_SRCH\_WIN\_N_S$, and $SRCH\_WIN\_R_S$ to $CF\_SRCH\_WIN\_R_S$.
- ◊ The mobile station shall set $SEARCH\_PRIORITY\_INCL_S$ to $CF\_SEARCH\_PRIORITY\_INCL_S$, $SRCH\_OFFSET\_INCL_S$ to $CF\_SRCH\_OFFSET\_INCL_S$, and $SRCH\_WIN\_NGHBR\_INCL_S$ to $CF\_SRCH\_WIN\_NGHBR\_INCL_S$.

- o The mobile station shall re-enable its transmitter and shall re-enable the fade timer (see 2.6.4.1.8) and reset it for T_{5m} seconds. Then, the mobile station shall transmit the Traffic Channel Preamble, as described in [2], followed by a *Handoff Completion Message* if $P\_REV\_IN\_USE_S$ is less than seven or an *Extended Handoff Completion Message* if $P\_REV\_IN\_USE_S$ is equal to or greater than seven.
- o If a F-CPCCH is not assigned, after starting the handoff timer, upon receiving the first period of $(N_{3m} \times 20)$ ms with sufficient signal quality on the physical channel corresponding to $FPC\_PRI\_CHAN_S$, the mobile station shall resume incrementing TOT_FRAMES_S, BAD_FRAMES_S, $DCCH\_TOT\_FRAMES_S$, and $DCCH\_BAD\_FRAMES_S$ if applicable as specified in 2.6.4.1.1.
- o If the Target Frequency is same as the Candidate Frequency ($TF\_CDMABAND_S$ is equal to $CF\_CDMABAND_S$ and TF_CDMACH_S is equal to CF_CDMACH_S), then the mobile station shall set $PERIODIC\_SEARCH_S$ to '0'.
- o If $PERIODIC\_SEARCH_S$ is equal to '1', the mobile station shall perform the following:
  - ◊ The mobile station shall set $ALIGN\_TIMING\_USED_S$ to '0' and $SEARCH\_OFFSET_S$ to '000000'.
  - ◊ The mobile station shall start a periodic search as described in 2.6.6.2.8.3.2.
- o The mobile station shall maintain its pilot sets using the procedures described in 2.6.6.2.6.

2.6.6.2.8.2.1 Restoring the Configuration

If the mobile station declares a handoff attempt to be unsuccessful (see 2.6.6.2.8.2), it shall perform the following actions:

- If the handoff timer is enabled, the mobile station shall disable it.
- The mobile station shall restore the following parameters:
  - – Message encryption mode: If $SF\_ENCRYPT\_MODE_S$ is equal to '0', the mobile station shall turn off message encryption; otherwise, it shall turn on message encryption.

- Service configuration: The mobile station shall use the service configuration stored in $SF\_SERVICE\_CONFIG_S$ to process Forward and Reverse Traffic Channel frames.
- The mobile station shall restore the list of calls stored in SF_CALLS_S.
- Protocol revision level ($P\_REV_S = SF\_P\_REV_S$)
- Protocol revision level in use on the serving frequency ($P\_REV\_IN\_USE_S = SF\_P\_REV\_IN\_USE_S$)
- Service negotiation type ($SERV\_NEG_S = SF\_SERV\_NEG_S$)
- Private long code mask: If $SF\_PRIVATE\_LCM_S$ is set to '1' then the mobile station shall set PVTLCM_42 to $SF\_PVTLCM\_42_S$.
- Long code mask: If $SF\_PRIVATE\_LCM_S$ is equal to '1', the mobile station shall use the private long code mask; otherwise, it shall use the public long code mask derived from $SF\_PLCM\_TYPE_S$ and $SF\_PLCM\_39_S$ (if any).
- Search window size for the Active Set and Candidate Set ($SRCH\_WIN\_A_S = SF\_SRCH\_WIN\_A_S$)
- Search window size for the Neighbor Set ($SRCH\_WIN\_N_S = SF\_SRCH\_WIN\_N_S$)
- Search window size for the Remaining Set ($SRCH\_WIN\_R_S = SF\_SRCH\_WIN\_R_S$)
- Pilot detection threshold ($T\_ADD_S = SF\_T\_ADD_S$)
- Pilot drop threshold ($T\_DROP_S = SF\_T\_DROP_S$)
- Soft slope for the dynamic add and drop threshold ($SOFT\_SLOPE_S = SF\_SOFT\_SLOPE_S$)
- Intercept for the dynamic add threshold ($ADD\_INTERCEPT_S = SF\_ADD\_INTERCEPT_S$)
- Intercept for the dynamic drop threshold ($DROP\_INTERCEPT_S = SF\_DROP\_INTERCEPT_S$)
- Active Set versus Candidate Set comparison threshold ($T\_COMP_S = SF\_T\_COMP_S$)
- Drop timer value ($T\_TDROP_S = SF\_T\_TDROP_S$)
- Drop timer range value ($T\_TDROP\_RANGE_S = SF\_T\_TDROP\_RANGE_S$)
- Frame offset ($FRAME\_OFFSET_S = SF\_FRAME\_OFFSET_S$)
- Nominal power setting ($NOM\_PWR_S = SF\_NOM\_PWR_S$)
- Extended nominal power setting ($NOM\_PWR\_EXT_S = SF\_NOM\_PWR\_EXT_S$)
- Power control step ($PWR\_CNTL\_STEP_S = SF\_PWR\_CNTL\_STEP_S$)
- CDMA band class ($CDMABAND_S = SF\_CDMABAND_S$)

- Frequency assignment ($CDMACH_s$ = SF_CDMACH_s)
- Active Set (For each pilot in the Serving Frequency Active Set: (PILOT_REC, PWR_COMB_IND))
- Code channel list ($CODE\_CHAN\_LIST_s$ = $SF\_CODE\_CHAN\_LIST_s$)

• The mobile station shall tune to the Serving Frequency and resume using the Serving Frequency Active Set as follows:

- If the mobile station was processing the Forward Fundamental Channel prior to tuning to the Candidate Frequency, the mobile station shall resume processing the Forward Fundamental Channel. If the mobile station was transmitting on the Reverse Fundamental Channel prior to tuning to the Candidate Frequency, the mobile station shall resume transmitting on the Reverse Fundamental Channel.
- If the mobile station was processing the Forward Dedicated Control Channel prior to tuning to the Candidate Frequency, the mobile station shall resume processing the Forward Dedicated Control Channel. If the mobile station was transmitting on the Reverse Dedicated Control Channel prior to tuning to the Candidate Frequency, the mobile station shall resume transmitting on the Reverse Dedicated Control Channel.
- The mobile station shall not resume transmitting on the Reverse Supplemental Code Channels and Reverse Supplemental Channels (if any). The mobile station shall not process on the Forward Supplemental Code Channels and Forward Supplemental Channels (if any).
- When the mobile station resumes transmission on the Reverse Traffic Channel, it shall use the following rules to re-enable its transmitter:
  + If the interval between the time that the mobile station disables its transmitter and the time that it resumes using the Serving Frequency Active Set is equal to or greater than ($N_{2m} \times 20$) ms, then:
    - o If a F-CPCCH is not assigned, the mobile station shall wait to receive a period of ($N_{3m} \times 20$) ms with sufficient signal quality on the physical channel corresponding to $FPC\_PRI\_CHAN_s$ before it re-enables its transmitter.
    - o If a F-CPCCH is assigned, the mobile station shall wait to receive a period of ($N_{17m} \times 1.25$) ms with sufficient signal quality on the Forward Common Power Control Subchannels assigned to this mobile station before it re-enables its transmitter.

+ Otherwise, after the mobile station tunes to the Serving Frequency, the mobile station shall re-enable its transmitter no later than $N_{3m} \times 20$ ms if a F-CPCCH is not assigned, and no later than ($N_{17m} \times 1.25$) ms if a F-CPCCH is assigned. The mobile station should re-enable its transmitter earlier. After the mobile station re-enables its transmitter, the mean output power shall be as specified in [2] for a step change in input power. If the mobile station re-enables its transmitter earlier than ($N_{3m} \times 20$) ms if a F-CPCCH is not assigned, or earlier than ($N_{17m} \times 1.25$) ms if a F-CPCCH is assigned, after it tunes to the Serving Frequency, the initial mean output power shall be as specified in [2], where the initial mean input power estimate is either:
  - o within 6 dB of the actual mean input power, or
  - o equal to the mean input power before the mobile station tuned to the Target Frequency.

- The mobile station shall enable the fade timer and the handoff drop timers corresponding to the pilots in its Active Set and Candidate Set. The mobile station shall resume incrementing TOT_FRAMES_s, BAD_FRAMES_s, $DCCH\_TOT\_FRAMES_s$, and $DCCH\_BAD\_FRAMES_s$ if applicable as specified in 2.6.4.1.1.

- The mobile station shall send a *Candidate Frequency Search Report Message* within T_{56m} seconds of declaring the handoff attempt to be unsuccessful. The mobile station shall report the contents of the *Candidate Frequency Search Report Message* as follows:
  - – The mobile station shall report the two components of the Target Frequency in the CDMA_FREQ and BAND_CLASS fields.
  - – The mobile station shall report the received power on the Target Frequency and on the Serving Frequency in the CF_TOTAL_RX_PWR and SF_TOTAL_RX_PWR fields, respectively.
  - – For each pilot in the Target Frequency Active Set that measures above $TF\_T\_ADD_s$, the mobile station shall report its phase and strength in the fields PILOT_PN_PHASE and PILOT_STRENGTH, respectively.
  - – If the Target Frequency is the same as the Candidate Frequency ($TF\_CDMABAND_s$ is equal to $CF\_CDMABAND_s$, and TF_CDMACH_s is equal to CF_CDMACH_s), and is different from the Serving Frequency ($TF\_CDMABAND_s$ is not equal to $SF\_CDMABAND_s$ or TF_CDMACH_s is not equal to SF_CDMACH_s), the mobile station shall also report the strength of each pilot in the Candidate Frequency Search Set that measures above $CF\_T\_ADD_s$.

- If the Serving Frequency is the same as the Candidate Frequency ($SF\_CDMABAND_s$ is equal to $CF\_CDMABAND_s$ and SF_CDMACH_s is equal to CF_CDMACH_s), then the mobile station shall set $PERIODIC\_SEARCH_s$ to ‘0’.

- If $PERIODIC\_SEARCH_s$ is equal to ‘1’ and the Candidate Frequency Search Set is not empty, the mobile station shall perform the following:

– The mobile station shall set $ALIGN\_TIMING\_USED_S$ to '0' and $SEARCH\_OFFSET_S$ to '000000'.

– The mobile station shall carry out the periodic search procedures described in 2.6.6.2.8.3.2.

2.6.6.2.8.3 Search of Pilots on the CDMA Candidate Frequency

If $SEARCH\_MODE_S$ is equal to '0000', the mobile station shall perform the following: If $PERIODIC\_SEARCH_S$ is equal to '0', the mobile station shall search the Candidate Frequency Search Set once, as described in 2.6.6.2.8.3.1; otherwise, the mobile station shall search the Candidate Frequency Search Set periodically, as described in 2.6.6.2.8.3.2.

2.6.6.2.8.3.1 CDMA Candidate Frequency Single Search

The mobile station does a single search of the Candidate Frequency Search Set by performing the following actions at the action time of the *Candidate Frequency Search Control Message* or the *Candidate Frequency Search Request Message* that started the search:

- If $ALIGN\_TIMING\_USED_S$ is set to '0', the mobile station shall measure the strength of all pilots in the Candidate Frequency Search Set in one or more visits to the Candidate Frequency, as described in 2.6.6.2.8.3.3.
- If $ALIGN\_TIMING\_USED_S$ is set to '1', the mobile station shall measure the strength of all pilots in the Candidate Frequency Search Set in one or more scheduled visits (see below) to the Candidate Frequency, as described in 2.6.6.2.8.3.3.

  The mobile station shall schedule visits to the Candidate Frequency only at $((0.00125 \times SEARCH\_OFFSET_S) + k \times (SEARCH\_TIME\_RESOLUTION_S \times inter\_visit\_time))$ seconds after the action time of the *Candidate Frequency Search Request Message* or the *Candidate Frequency Search Control Message* that started the search, where

  k = an integer between 0 and *max_num_visits*, inclusive, where *max_num_visits* is the value of MAX_NUM_VISITS field of the last *Candidate Frequency Search Response Message* sent by the mobile station,

  and

  inter_visit_time = the value of the INTER_VISIT_TIME field of the last *Candidate Frequency Search Response Message* sent by the mobile station.

- The mobile station shall complete the measurements and send a *Candidate Frequency Search Report Message* within $((0.00125 \times SEARCH\_OFFSET_S) + freshness\_interval)$ seconds after the action time of the *Candidate Frequency Search Control Message*, or the *Candidate Frequency Search Request Message*, where *freshness_interval* is determined as follows:

– If the value of the TOTAL_OFF_TIME_FWD field or of the TOTAL_OFF_TIME_REV field of the last *Candidate Frequency Search Response Message* sent by the mobile station to the base station is greater than or equal to $\lceil (T_{70m} - T_{71m}) / \text{SEARCH\_TIME\_RESOLUTION}_S \rceil$, then

$$\textit{freshness\_interval} = (\max(\textit{fwd\_time}, \textit{rev\_time}) + T_{71m}) \text{ seconds,}$$

where

$$\textit{fwd\_time} = \text{SEARCH\_TIME\_RESOLUTION}_S \times (\text{value of the TOTAL\_OFF\_TIME\_FWD field of the last } \textit{Candidate Frequency Search Response Message} \text{ sent by the mobile station}),$$

and

$$\textit{rev\_time} = \text{SEARCH\_TIME\_RESOLUTION}_S \times (\text{value of the TOTAL\_OFF\_TIME\_REV field of the last } \textit{Candidate Frequency Search Response Message} \text{ sent by the mobile station}).$$

– Otherwise,

$$\textit{freshness\_interval} = T_{70m} \text{ seconds.}$$

The mobile station shall set the fields of the *Candidate Frequency Search Report Message* as follows:

– The mobile station shall report the two components of the Candidate Frequency in the CDMA_FREQ and BAND_CLASS fields.

– The mobile station shall report the received power on the Candidate Frequency and on the Serving Frequency in the CF_TOTAL_RX_PWR and SF_TOTAL_RX_PWR fields, respectively.

– For each pilot in the Candidate Frequency Search Set that measures above CF_T_ADD_S, the mobile station shall report its phase and strength in the fields PILOT_PN_PHASE and PILOT_STRENGTH, respectively.

2.6.6.2.8.3.2 Candidate Frequency Periodic Search

When the mobile station performs a periodic search, it periodically searches the Candidate Frequency Search Set and reports the results to the base station in the *Candidate Frequency Search Report Message*, as described in this section. The mobile station may measure all pilots in the Candidate Frequency Search Set in one visit to the Candidate Frequency, or it may visit the Candidate Frequency several times in a search period, each time measuring all or some of the pilots in the Candidate Frequency Search Set, as described in 2.6.6.2.8.3.3.

If $\text{SF\_TOTAL\_EC\_THRESH}_S$ is not equal to '11111', while tuned to the Serving Frequency (specified by CDMACH_S and CDMABAND_S), the mobile station shall measure the total received power spectral density, in mW/1.23 MHz, on the Serving Frequency at least once every 20 ms frame. The mobile station shall maintain the average of the spectral density (*spec_density*) over the last N_{12m} frames.

(In the following, $(E_c/I_o)_{total}$ is the total E_c/I_o of the pilots in the Active Set, measured as specified in 2.6.6.2.2, and *total_ec* is defined as $(10 \times \log_{10} ((E_c/I_o)_{total} \times spec\_density))$.)

The mobile station shall maintain a periodic search timer as follows:

- When the mobile station starts a periodic search, it shall set the periodic search timer to the value in Table 2.6.6.2.8.3.2-1 corresponding to $SEARCH\_PERIOD_S$ and shall enable the timer.
  - If the periodic search is started by a *Candidate Frequency Search Request Message* or a *Candidate Frequency Search Control Message*, then the mobile station shall start the periodic search ($0.00125 \times SEARCH\_OFFSET_S$) seconds after the action time of the *Candidate Frequency Search Request Message* or the *Candidate Frequency Search Control Message* that started the search.
  - If the periodic search is started following successful or unsuccessful handoff attempt, the mobile station shall start the periodic search:
    - Upon sending the *Handoff Completion Message* or *Extended Handoff Completion Message*, in the case that the handoff was successful.
    - Upon sending the *Candidate Frequency Search Report Message*, in the case that the handoff was unsuccessful.
- When the periodic search timer expires, the mobile station shall reset the periodic search timer to the value in Table 2.6.6.2.8.3.2-1 corresponding to $SEARCH\_PERIOD_S$ and shall re-enable the timer.
- If $ALIGN\_TIMING\_USED_S$ is set to '0', $SF\_TOTAL\_EC\_THRESH_S$ is not equal to '11111' and $SF\_TOTAL\_EC\_IO\_THRESH_S$ is equal to '11111', the mobile station shall perform the following actions once per frame:
  - Disable the periodic search timer if *total_ec* is not less than $(-120 + 2 \times SF\_TOTAL\_EC\_THRESH_S)$.
  - Reset the expiration time of the periodic search timer to the value in Table 2.6.6.2.8.3.2-1 corresponding to $SEARCH\_PERIOD_S$, and re-enable the timer if the following conditions are true:
    - the periodic search timer is disabled, and
    - *total_ec* is less than $(-120 + 2 \times SF\_TOTAL\_EC\_THRESH_S)$.
- If $ALIGN\_TIMING\_USED_S$ is set to '0', $SF\_TOTAL\_EC\_THRESH_S$ is equal to '11111' and $SF\_TOTAL\_EC\_IO\_THRESH_S$ is not equal to '11111', the mobile station shall perform the following actions once per frame:
  - Disable the periodic search timer if $(-20 \times \log_{10} (E_c/I_o)_{total})$ is not greater than $SF\_TOTAL\_EC\_IO\_THRESH_S$.
  - Reset the expiration time of the periodic search timer to the value in Table 2.6.6.2.8.3.2-1 corresponding to $SEARCH\_PERIOD_S$, and re-enable the timer if the following conditions are true:
    - the periodic search timer is disabled, and

+ $(-20 \times \log_{10} (E_c/I_o)_{total})$ is greater than $SF\_TOTAL\_EC\_IO\_THRESH_S$.

- If $ALIGN\_TIMING\_USED_S$ is set to '0', $SF\_TOTAL\_EC\_THRESH_S$ is not equal to '11111' and $SF\_TOTAL\_EC\_IO\_THRESH_S$ is not equal to '11111', the mobile station shall perform the following actions once per frame:
  - Disable the periodic search timer if the following conditions are true:
    + *total_ec* is not less than $(-120 + 2 \times SF\_TOTAL\_EC\_THRESH_S)$, and
    + $(-20 \times \log_{10} (E_c/I_o)_{total})$ is not greater than $SF\_TOTAL\_EC\_IO\_THRESH_S$.
  - Reset the expiration time of the periodic search timer to the value in Table 2.6.6.2.8.3.2-1 corresponding to $SEARCH\_PERIOD_S$, and re-enable the timer if the following conditions are true:
    + the periodic search timer is disabled, and
    + *total_ec* is less than $(-120 + 2 \times SF\_TOTAL\_EC\_THRESH_S)$, or $(-20 \times \log_{10} (E_c/I_o)_{total})$ is greater than $SF\_TOTAL\_EC\_IO\_THRESH_S$.
- The mobile station shall maintain the periodic search timer independent of the total E_c and the total E_c/I_o of the pilots in the Serving Frequency Active Set, if any of the following conditions is true:
  - $ALIGN\_TIMING\_USED_S$ is set to '1, or
  - $SF\_TOTAL\_EC\_THRESH_S$ is equal to '11111' and $SF\_TOTAL\_EC\_IO\_THRESH_S$ is equal to '11111'.

Table 2.6.6.2.8.3.2-1. Search Period Values

$SEARCH\_PERIOD_S$	Search Period (seconds)	$SEARCH\_PERIOD_S$	Search Period (seconds)
0	0.48	8	30
1	0.96	9	40
2	2	10	50
3	2.96	11	60
4	4	12	80
5	4.96	13	100
6	10	14	150
7	20	15	200

If the periodic search timer is enabled, the mobile station shall perform the following actions before the timer expires:

- If $ALIGN\_TIMING\_USED_S$ is set to '0', the mobile station shall measure the strength of all pilots in the Candidate Frequency Search Set at least once in one or more visits to the Candidate Frequency, as described in 2.6.6.2.8.3.3.
- If $ALIGN\_TIMING\_USED_S$ is set to '1', the mobile station shall measure the strength of all pilots in the Candidate Frequency Search Set in one or more scheduled visits (see below) to the Candidate Frequency, as described in 2.6.6.2.8.3.3.

  The mobile station shall schedule visits to the Candidate Frequency only at $((0.00125 \times SEARCH\_OFFSET_S) + k \times (SEARCH\_TIME\_RESOLUTION_S \times$ *inter_visit_time*$))$ seconds after the action time of the *Candidate Frequency Search Request Message* or the *Candidate Frequency Search Control Message* that started the search, where

  k = an integer between 0 and *max_num_visits*, inclusive, where *max_num_visits* is the value of MAX_NUM_VISITS field of the last *Candidate Frequency Search Response Message* sent by the mobile station,

  and

  inter_visit_time = the value of the INTER_VISIT_TIME field of the last *Candidate Frequency Search Response Message* sent by the mobile station.

  – The mobile station shall abort a scheduled visit to the Candidate Frequency if at the scheduled time, one or both of the following conditions hold:

    + $SF\_TOTAL\_EC\_THRESH_S$ is not equal to '11111' and *total_ec* is not less than $(-120 + 2 \times SF\_TOTAL\_EC\_THRESH_S)$, or

    + $SF\_TOTAL\_EC\_IO\_THRESH_S$ is not equal to '11111' and $(-20 \times \log_{10} (E_C/I_O)_{total})$ is not greater than $SF\_TOTAL\_EC\_IO\_THRESH_S$.

  – If the mobile station aborts a scheduled visit during a search period, it may abort all remaining scheduled visits in that search period.

- The mobile station shall send a *Candidate Frequency Search Report Message* if $MIN\_TOTAL\_PILOT\_EC\_IO_S$ is equal to '00000' or if $(-20 \times \log_{10} (E_C/I_O)_{total})$ is less than or equal to $MIN\_TOTAL\_PILOT\_EC\_IO_S$, where $(E_C/I_O)_{total}$ is the sum of E_C/I_O for all those pilots that measure above $CF\_T\_ADD_S$ in the current search period.

  The mobile station shall report the contents of the *Candidate Frequency Search Report Message* as follows:

  – The mobile station shall report the two components of the Candidate Frequency in the CDMA_FREQ and BAND_CLASS fields.

  – The mobile station shall report the received power on the Candidate Frequency and on the Serving Frequency in the CF_TOTAL_RX_PWR and SF_TOTAL_RX_PWR fields, respectively.

- For each pilot in the Candidate Frequency Search Set that measures above $CF\_T\_ADD_s$, the mobile station shall report its phase and strength in the fields PILOT_PN_PHASE and PILOT_STRENGTH, respectively.

- The mobile station shall ensure that the strength measurement for all pilots in the Candidate Frequency Search Set were obtained within *freshness_interval* before the *Candidate Frequency Search Report Message* is sent, where *freshness_interval* is determined as follows:

  - If the value of the TOTAL_OFF_TIME_FWD field or of the TOTAL_OFF_TIME_REV field of the last *Candidate Frequency Search Response Message* sent by the mobile station to the base station is greater than or equal to $\lceil (T_{70m} - T_{71m}) / SEARCH\_TIME\_RESOLUTION_s \rceil$, then

    $$freshness\_interval = (\max(fwd\_time, rev\_time) + T_{71m}) \text{ seconds,}$$

    where

    $$fwd\_time = SEARCH\_TIME\_RESOLUTION_s \times (\text{value of the TOTAL\_OFF\_TIME\_FWD field of the last } \textit{Candidate Frequency Search Response Message} \text{ sent by the mobile station}),$$

    and

    $$rev\_time = SEARCH\_TIME\_RESOLUTION_s \times (\text{value of the TOTAL\_OFF\_TIME\_REV field of the last } \textit{Candidate Frequency Search Response Message} \text{ sent by the mobile station}).$$

  - Otherwise,

    $$freshness\_interval = T_{70m} \text{ seconds.}$$

2.6.6.2.8.3.3 Candidate Frequency Pilot Measurements

The mobile station measures the strength of all pilots in the Candidate Frequency Search Set in one or more visits to the Candidate Frequency. The mobile station shall perform the following actions each time it visits the Candidate Frequency to measure pilot strengths:

- If the mobile station is processing the Forward Fundamental Channel, the mobile station shall stop processing the Forward Fundamental Channel. If the mobile station is transmitting on the Reverse Fundamental Channel, the mobile station shall stop transmitting on the Reverse Fundamental Channel.

- If the mobile station is processing the Forward Dedicated Control Channel, the mobile station shall stop processing the Forward Dedicated Control Channel. If the mobile station is transmitting on the Reverse Dedicated Control Channel, the mobile station shall stop transmitting on the Reverse Dedicated Control Channel.

- The mobile station shall stop processing the Forward Supplemental Code Channels and Forward Supplemental Channels (if any). The mobile station shall stop transmitting on the Reverse Supplemental Code Channels and Reverse Supplemental Channels (if any).

- The mobile station shall disable the fade timer (see 2.6.4.1.8) and the handoff drop timers corresponding to its current Active Set and Candidate Set (see 2.6.6.2.3), and shall suspend incrementing TOT_FRAMES_S, BAD_FRAMES_S, $DCCH\_TOT\_FRAMES_S$, $DCCH\_BAD\_FRAMES_S$, $SCH\_TOT\_FRAMES_S$, and $SCH\_BAD\_FRAMES_S$ if applicable (see 2.6.4.1.1).
- The mobile station shall lock the accumulation of valid level changes in the closed loop mean output power and shall ignore received power control bits related to the period that the transmitter is disabled (see [2]).
- The mobile station shall store the following parameters from its current configuration:
  - CDMA band class ($SF\_CDMABAND_S = CDMABAND_S$)
  - Frequency Assignment ($SF\_CDMACH_S = CDMACH_S$)
  - Pilot detection threshold ($SF\_T\_ADD_S = T\_ADD_S$)
- The mobile station shall set the following parameters:
  - $CDMABAND_S = CF\_CDMABAND_S$
  - $CDMACH_S = CF\_CDMACH_S$
  - $T\_ADD_S = CF\_T\_ADD_S$

  The mobile station shall tune to the Candidate Frequency.
- The mobile station shall not change its time reference (see [2]) until it resumes using the Serving Frequency Active Set, as described below.
- The mobile station shall measure the mean input power on the Candidate Frequency (*cand_freq_pwr*, in dBm / 1.23 MHz), and may use *cand_freq_pwr* along with the measurement of the mean input power on the Serving Frequency (*avg_serving_freq_pwr*, in dBm / 1.23 MHz) in the search procedure as follows:
  - If $DIFF\_RX\_PWR\_THRESH_S$ is not equal to '00000', and (*cand_freq_pwr* - *avg_serving_freq_pwr*) is less than (-30 + 2 × $DIFF\_RX\_PWR\_THRESH_S$) dB, the mobile station may terminate the search for pilots in the current visit to the Candidate Frequency.
  - If $DIFF\_RX\_PWR\_THRESH_S$ is equal to '00000', the mobile station does not use the power measurements in the search procedure, or *(cand_freq_pwr* - *avg_serving_freq_pwr)* is not less than (-30 + 2 × $DIFF\_RX\_PWR\_THRESH_S$) dB, the mobile station shall measure E_C/I_O for all or some of the pilots in its Candidate Frequency Search Set, using the search procedures specified in 2.6.6.2.2.
- The mobile station shall restore the following parameters:
  - Pilot detection threshold ($T\_ADD_S = SF\_T\_ADD_S$)
  - CDMA band class ($CDMABAND_S = SF\_CDMABAND_S$)
  - Frequency assignment ($CDMACH_S = SF\_CDMACH_S$)

- The mobile station shall tune to the Serving Frequency and shall resume using the Serving Frequency Active Set as follows:
  - If the mobile station was processing the Forward Fundamental Channel prior to tuning to the Candidate Frequency, the mobile station shall resume processing the Forward Fundamental Channel. If the mobile station was transmitting on the Reverse Fundamental Channel prior to tuning to the Candidate Frequency, the mobile station shall resume transmitting on the Reverse Fundamental Channel.
  - If the mobile station was processing the Forward Dedicated Control Channel prior to tuning to the Candidate Frequency, the mobile station shall resume processing the Forward Dedicated Control Channel. If the mobile station was transmitting on the Reverse Dedicated Control Channel prior to tuning to the Candidate Frequency, the mobile station shall resume transmitting on the Reverse Dedicated Control Channel.
  - If the Forward Supplemental Code Channels and Forward Supplemental Channels assignment has not expired, the mobile station shall resume processing the Forward Supplemental Code Channels and Forward Supplemental Channels (if any). If the Reverse Supplemental Code Channel and Reverse Supplemental Channels assignment has not expired, the mobile station may resume transmitting on the Reverse Supplemental Code Channels and Reverse Supplemental Channels (if any).
  - When the mobile station resumes transmission on the Reverse Traffic Channel, it shall use the following rules to re-enable its transmitter:
    - If the interval between the time that the mobile station disables its transmitter and the time that it resumes using the Serving Frequency Active Set is equal to or greater than ($N_{2m} \times 20$) ms, then the mobile station shall wait to receive a period of ($N_{3m} \times 20$) ms with sufficient signal quality on the physical channel corresponding to $FPC\_PRI\_CHAN_S$ before it re-enables its transmitter.
    - Otherwise, the mobile station shall re-enable its transmitter no later than $N_{3m} \times 20$ ms after the mobile station tunes to the Serving Frequency. The mobile station should re-enable its transmitter earlier. After the mobile station re-enables its transmitter, the mean output power shall be as specified in 2.1.2.4.1 for a step change in input power. If the mobile station re-enables its transmitter earlier than $N_{3m} \times 20$ ms after it tunes to the Serving Frequency, the initial mean output power shall be as specified in [2], where the initial mean input power estimate is either:
      - within 6 dB of the actual mean input power, or
      - equal to the mean input power before the mobile station tuned to the Target Frequency.

- The mobile station shall enable the fade timer and the handoff drop timers corresponding to the pilots in its Active Set and Candidate Set. The mobile station shall resume incrementing TOT_FRAMES_S, BAD_FRAMES_S, $DCCH\_TOT\_FRAMES_S$, $DCCH\_BAD\_FRAMES_S$, $SCH\_TOT\_FRAMES_S$, and $SCH\_BAD\_FRAMES_S$ if applicable as specified in 2.6.4.1.8.

2.6.6.2.8.3.4 Aborting CDMA Candidate Frequency Periodic Search

When the mobile station aborts a periodic search, it shall perform the following:

- The mobile station shall cancel any remaining visits to the Candidate Frequency in the current search period, and shall not send a *Candidate Frequency Search Report Message* for the current search period.
- The mobile station shall disable the periodic search timer.

2.6.6.2.9 Reserved

2.6.6.2.10 Reserved

2.6.6.2.11 Processing of Reverse Supplemental Code Channels and Reverse Supplemental Channels

Reverse Supplemental Code Channels are not supported for $P\_REV\_IN\_USE_S$ greater than or equal to nine.

If $USE\_T\_ADD\_ABORT_S$ is set to '1', and the strength of a Neighbor Set or Remaining Set pilot is found to be above T_ADD_S, then the mobile station shall terminate any active transmission on Reverse Supplemental Code Channels or Reverse Supplemental Channels at the end of the current 20 ms frame. The mobile station shall perform the following:

- Any previously active Reverse Supplemental Code Channel or Reverse Supplemental Channel assignment shall be considered implicitly terminated.
- If active transmission on Reverse Supplemental Code Channels is terminated, the mobile station shall set $NUM\_REV\_CODES_S$ to '000' and shall set $IGNORE\_SCAM_S$ to '1'.
- If active transmission on Reverse Supplemental Channels is terminated, the mobile station shall set $IGNORE\_ESCAM_S$ to '1'.
- The mobile station shall set $SCRM\_SEQ\_NUM_S$ to ($SCRM\_SEQ\_NUM_S$ + 1) mod 16.
- The mobile station shall transmit a *Supplemental Channel Request Message* with USE_SCRM_SEQ_NUM set to '1', SCRM_SEQ_NUM set to $SCRM\_SEQ\_NUM_S$, and SIZE_OF_REQ_BLOB set to '0000'.

2.6.6.2.12 Periodic Serving Frequency Pilot Report Procedure

While the mobile station is tuned to the Serving Frequency (specified by $CDMACH_S$ and $CDMABAND_S$), the mobile station shall measure the total received power spectral density, in mW/1.23 MHz, on the Serving Frequency at least once every 20 ms frame. The mobile station shall maintain the average value of the total received power spectral density,

spec_density, over the last N_{12m} frames. The mobile station shall maintain the PPSMM timer as follows:

- When the mobile station starts a Periodic Serving Frequency Pilot Report Procedure, it shall set the PPSMM timer to $PPSMM\_PERIOD_S \times 0.08$ seconds and shall enable the timer.
- When the PPSMM timer expires, the mobile station shall send a *Periodic Pilot Strength Measurement Message* (2.6.6.2.5.2) to the base station, reset the PPSMM timer to $PPSMM\_PERIOD_S \times 0.08$ seconds and shall re-enable the timer.
- When the mobile station receives an *Extended Handoff Direction Message*, a *General Handoff Direction Message or a Universal Handoff Direction Message* directing the mobile station to perform a hard handoff (see 2.6.6.2.5.1), it shall abort the Periodic Serving Frequency Pilot Report Procedure and disable the PPSMM timer if it is enabled.
- If $MIN\_PILOT\_PWR\_THRESH_S$ is not equal to '11111' and $MIN\_PILOT\_EC\_IO\_THRESH_S$ is equal to '11111', the mobile station shall perform the following actions once per frame:
  - Disable the PPSMM timer if the received total energy per PN chip, E_C, of the pilots in the Active Set is not less than $(-120 + 2 \times MIN\_PILOT\_PWR\_THRESH_S)$, where the value of E_C is computed as $10 \times \log_{10}$ (PS $\times$ *spec_density)* and PS is the total E_C/I_O of the pilots in the Active Set measured as specified in 2.6.6.2.2.
  - Reset the expiration time of the PPSMM timer to $PPSMM\_PERIOD_S \times 0.08$ seconds and re-enable the timer if the following conditions are true:
    - the PPSMM timer is disabled, and
    - the received total energy per PN chip, E_C, of the pilots in the Active Set is less than $(-120 + 2 \times MIN\_PILOT\_PWR\_THRESH_S)$.
- If $MIN\_PILOT\_PWR\_THRESH_S$ is equal to '11111' and $MIN\_PILOT\_EC\_IO\_THRESH_S$ is not equal to '11111', the mobile station shall perform the following actions once per frame:
  - Disable the PPSMM timer if the total pilot strength of the pilots in the Active Set, PS, satisfies the condition that $(-20 \times \log_{10}(PS))$ is not greater than $MIN\_PILOT\_EC\_IO\_THRESH_S$.
  - Reset the expiration time of the PPSMM timer to $PPSMM\_PERIOD_S \times 0.08$ seconds and re-enable the timer if the following conditions are true:
    - the PPSMM timer is disabled, and
    - the total pilot strength of the pilots in the Active Set, PS, satisfies the condition that $(-20 \times \log_{10}(PS))$ is greater than $MIN\_PILOT\_EC\_IO\_THRESH_S$.
- If $MIN\_PILOT\_PWR\_THRESH_S$ is not equal to '11111' and $MIN\_PILOT\_EC\_IO\_THRESH_S$ is not equal to '11111', the mobile station shall perform the following actions once per frame:

- Disable the PPSMM timer if the following conditions are true:
  - the received total energy per PN chip, E_c, of the pilots in the Active Set is not less than (-120 + 2 × $MIN\_PILOT\_PWR\_THRESH_s$), and
  - the total pilot strength of the pilots in the Active Set, PS, satisfies the condition that (-20 × $\log_{10}$(PS)) is not greater than $MIN\_PILOT\_EC\_IO\_THRESH_s$.
- Reset the expiration time of the PPSMM timer to $PPSMM\_PERIOD_s$ × 0.08 seconds and re-enable the timer if the following conditions are true:
  - the PPSMM timer is disabled, and
  - the received total energy per PN chip, E_c, of the pilots in the Active Set is less than (-120 + 2 × $MIN\_PILOT\_PWR\_THRESH_s$), or the total pilot strength of the pilots in the Active Set, PS, satisfies the condition that (-20 × $\log_{10}$(PS)) is greater than $MIN\_PILOT\_EC\_IO\_THRESH_s$.

- If $MIN\_PILOT\_PWR\_THRESH_s$ is equal to '11111' and $MIN\_PILOT\_EC\_IO\_THRESH_s$ is equal to '11111', the mobile station shall maintain the PPSMM timer independent of the received power and the total E_c/I_o of the pilots.

2.6.6.2.13 Call Rescue Soft Handoff

This section presents an overview and mobile station requirements for the support of call rescue soft handoff while the mobile station is in the *Mobile Station Control on the Traffic Channel State*.

2.6.6.2.13.1 Overview

Support for the call rescue feature is mandatory for the mobile station. The mobile station initiates call rescue soft handoff after disabling its transmitter due to:

- insufficient signal quality on the Forward Traffic Channel (see 2.6.4.1.8)
- an acknowledgment failure.

In order for a pilot to be autonomously added to the Active Set, it must be a valid soft handoff candidate on the mobile station's neighbor list, and must also support a Rescue Channel. A Rescue Channel is a Fundamental Channel that is used for call rescue soft handoff, and has a pre-allocated Walsh Code that is provided to the mobile station as part of the *General Neighbor List Message*, *Universal Neighbor List Message*, and *Extended Neighbor List Update Message*.

If the mobile station is eligible to attempt call rescue soft handoff, then it re-enables its transmitter and monitors the Rescue Channel (as well as the other Traffic Channels in the Active Set) for good frames. Once good frames are received, then the call continues normally.

Three timers are used as part of call rescue soft handoff: the rescue delay timer, the rescue allowed timer, and the rescue attempt timer.

2.6.6.2.13.2 Requirements

If the rescue delay timer expires and the interval specified by $RESQ\_MIN\_PERIOD_S$ has elapsed since the last successful call rescue, then the mobile station shall enable the rescue allowed timer with an initial value of ($RESQ\_ALLOWED\_TIME_S \times 80$) ms.

While the rescue allowed timer is enabled, if the mobile station is able to promote any new pilots to the Active Set (see 2.6.6.2.6.1), then the mobile station shall perform the following:

- disable the rescue allowed timer,
- update the service configuration as specified in 2.6.6.2.13.3.
- cancel any current and pending Forward or Reverse Supplemental Channel assignments.
- re-enable its transmitter at the last closed-loop power level plus $RESQ\_POWER\_DELTA_S$,
- enable the rescue attempt timer with an initial value of ($RESQ\_ATTEMPT\_TIME_S \times 40$) ms.
- transmit the Traffic Channel preamble followed by a *Extended Pilot Strength Measurement Message*, where the length of the Traffic Channel preamble is determined as follows:
  - If operating in Radio Configuration 1 or 2, the length of the Traffic Channel preamble is given by $RESQ_NUM_PREAMBLE_RC1_RC2_S \times 20$ms.
  - If operating in Radio Configuration greater than 2, the length of the Traffic Channel preamble is given by the duration corresponding to $RESQ\_NUM\_PREAMBLE_S$ as specified by the Table 3.7.3.3.2.17-1.

If the rescue allowed timer expires, then the mobile station shall not autonomously promote any new pilots to the Active Set.

While the rescue attempt timer is enabled, the mobile station shall not perform the Forward or Reverse Traffic Channel power control procedures specified in 2.6.4.1.1 and 2.6.6.2.7.2, respectively.

If the rescue attempt timer expires, then the mobile station shall disable its transmitter.

2.6.6.2.13.3 Service Configuration Update Due to Call Rescue

The mobile station shall set CH_IND_S to ‘01’.

The mobile station shall replace the current Logical-to-Physical Mapping with the default Logical-to-Physical Mapping as specified in Table 2.6.4.2-1, where:

- requirement 1 is as follows: The SR_ID field shall be set to the SR_ID corresponding to the services mapped to the Fundamental Channel, and
- requirements 2 and 3 are as follows: the PHYSICAL_RESOURCE field shall be set to ‘0000’.

The mobile station shall replace the current Service Configuration information record with a new Service Configuration information record created as follows:

- The mobile station shall delete all Service Option Connection Records corresponding to an SR_ID that is not listed in the Call Rescue Logical-to-Physical Mapping created above and the Layer 3 shall terminate the corresponding call control instance (currently existing or pending instantiation).
- The mobile station shall identify the Call Control instance corresponding to the first service option connection listed in this newly created Service Configuration information record by the NULL identifier.

The mobile station shall set $SYNC\_ID_S$ to NULL.

2.6.6.3 Typical Message Exchanges During Handoffs

The following examples illustrate typical message exchanges between the mobile station and the base station during handoff. Refer to Annex B for examples of call processing during handoff.

Figure 2.6.6.3-1 shows an example of the messages exchanged between the mobile station and the base station during a typical handoff process if $P\_REV\_IN\_USE_S$ is less than or equal to three or $SOFT\_SLOPE_S$ is equal to '000000'.

Figure 2.6.6.3-2 shows an example of the messages exchanged between the mobile station and the base station during a typical handoff process if $P\_REV\_IN\_USE_S$ is greater than three and $SOFT\_SLOPE_S$ is not equal to '000000'.

Figure 2.6.6.3-3 illustrates the messaging triggered by a pilot of the Candidate Set as its strength gradually rises above the strength of each pilot of the Active Set if $P\_REV\_IN\_USE_S$ is less than or equal to three, or $SOFT\_SLOPE_S$ is equal to '000000'. Note that the mobile station reports that a Candidate Set pilot is stronger than an Active Set pilot only if the difference between their respective strengths is at least $T\_COMP \times 0.5$ dB.

Figure 2.6.6.3-4 illustrates the messaging triggered by a pilot of the Candidate Set as its strength gradually rises above the strength of each pilot of the Active Set if $P\_REV\_IN\_USE_S$ is greater than three and $SOFT\_SLOPE_S$ is not equal to '000000'. Note that the mobile station reports that a Candidate Set pilot is stronger than an Active Set pilot only if the difference between their respective strengths is at least $T\_COMP \times 0.5$ dB and Pilot P_0 strength exceeds $[(SOFT\_SLOPE/8) \times 10 \times \log_{10}(PS_1 + PS_2) + ADD\_INTERCEPT/2]$.

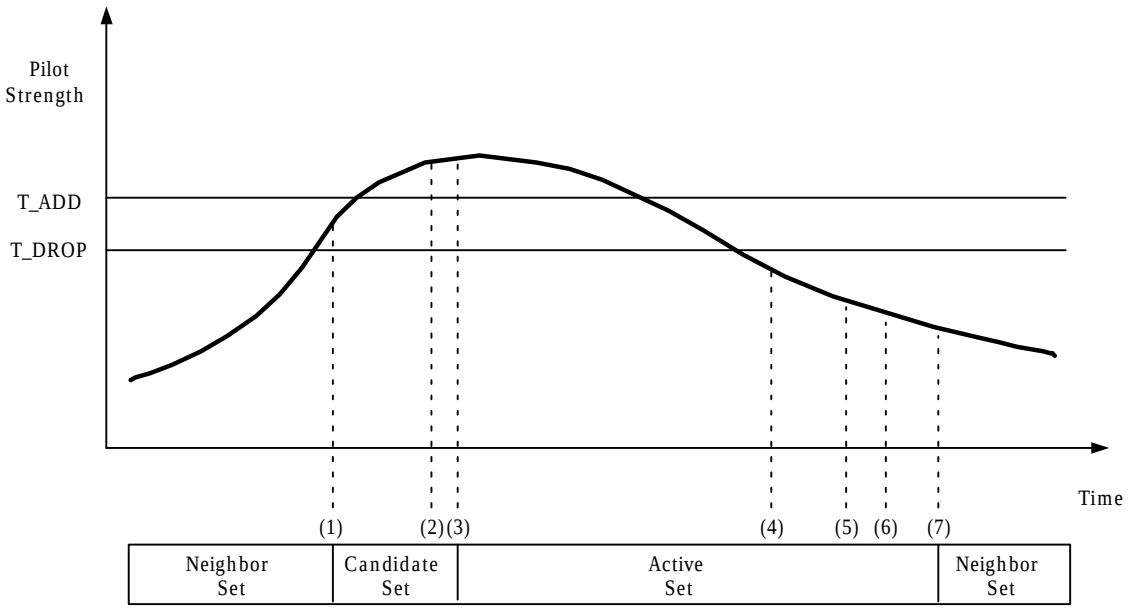

(1) Pilot strength exceeds T_ADD. Mobile station sends a *Pilot Strength Measurement Message* and transfers pilot to the Candidate Set.

(2) Base station sends an *Extended Handoff Direction Message*, a *General Handoff Direction Message or a Universal Handoff Direction Message*.

(3) Mobile station transfers pilot to the Active Set and sends a *Handoff Completion Message*.

(4) Pilot strength drops below T_DROP. Mobile station starts the handoff drop timer.

(5) Handoff drop timer expires. Mobile station sends a *Pilot Strength Measurement Message*.

(6) Base station sends an *Extended Handoff Direction Message*, a *General Handoff Direction Message or a Universal Handoff Direction Message*.

(7) Mobile station moves pilot from the Active Set to the Neighbor Set and sends a *Handoff Completion Message*.

Figure 2.6.6.3-1. Handoff Threshold Example if P_REV_IN_USE$_S$ is Less Than or Equal to Three, or SOFT_SLOPE$_S$ is Equal to '000000'

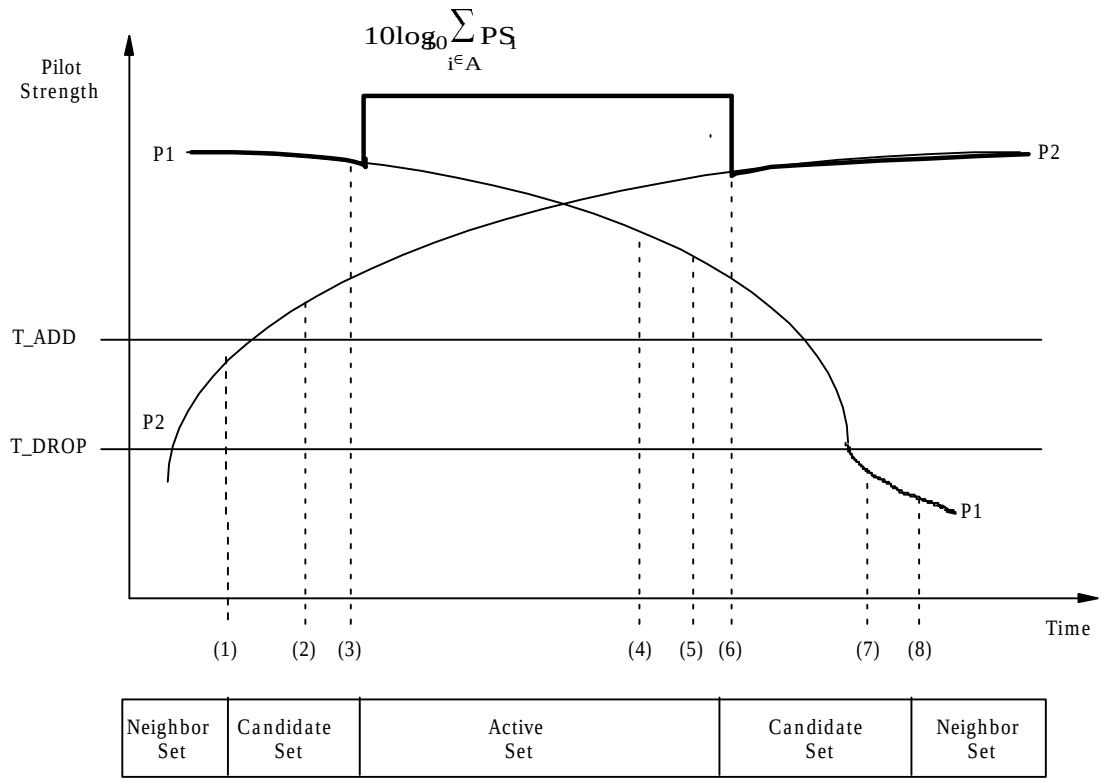

(1) Pilot P_2 strength exceeds T_ADD. Mobile station transfers the pilot to the Candidate Set.

(2) Pilot P_2 strength exceeds $[(\text{SOFT\_SLOPE}/8) \times 10 \times \log_{10}(PS_1) + \text{ADD\_INTERCEPT}/2]$. Mobile station sends a *Pilot Strength Measurement Message*.

(3) Mobile station receives an *Extended Handoff Direction Message*, a *General Handoff Direction Message or a Universal Handoff Direction Message*, transfers the pilot P_2 to the Active Set, and sends a *Handoff Completion Message*.

(4) Pilot P_1 strength drops below $[(\text{SOFT\_SLOPE}/8) \times 10 \times \log_{10}(PS_2) + \text{DROP\_INTERCEPT}/2]$. Mobile station starts the handoff drop timer.

(5) Handoff drop timer expires. Mobile station sends a *Pilot Strength Measurement Message*.

(6) Mobile station receives an *Extended Handoff Direction Message*, a *General Handoff Direction Message or a Universal Handoff Direction Message*, transfers the pilot P_1 to the Candidate Set and sends a *Handoff Completion Message*.

(7) Pilot P_1 strength drops below T_DROP. Mobile station starts the handoff drop timer.

(8) Handoff drop timer expires. Mobile station moves the pilot P_1 from the Candidate Set to the Neighbor Set.

Figure 2.6.6.3-2. Handoff Threshold Example if P_REV_IN_USE_s is Greater Than Three, and SOFT_SLOPE_s is Not Equal to '000000'

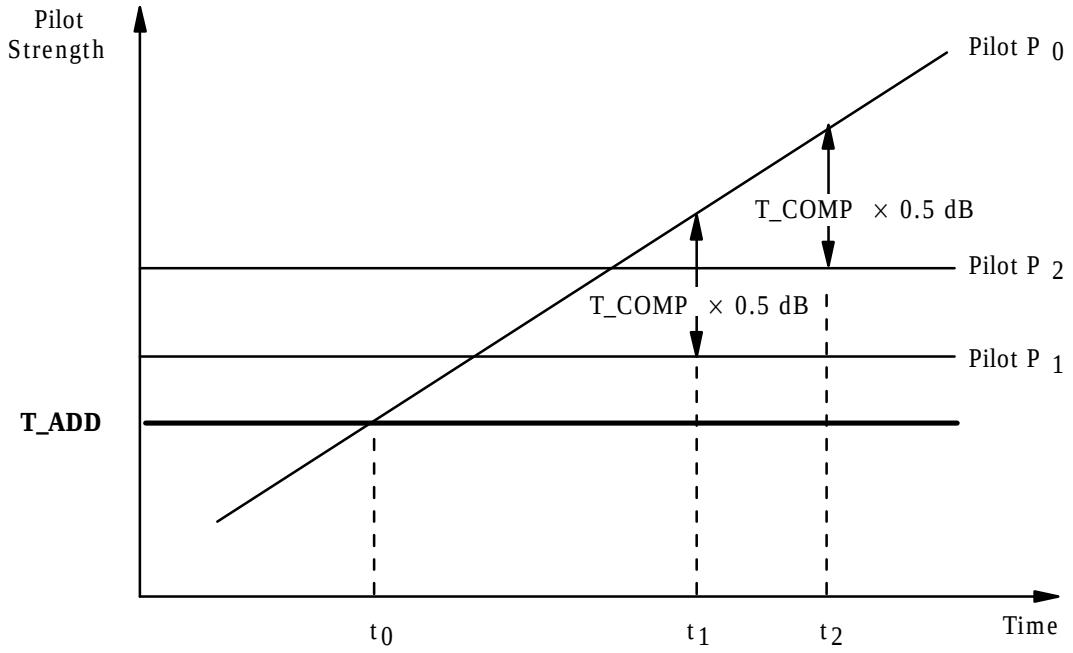

Candidate Set: Pilot P_0

Active Set: Pilots P_1, P_2

t_0 – *Pilot Strength Measurement Message* sent, P_0 > T_ADD

t_1 – *Pilot Strength Measurement Message* sent, $P_0 > P_1$ + T_COMP × 0.5 dB

t_2 – *Pilot Strength Measurement Message* sent, $P_0 > P_2$ + T_COMP × 0.5 dB

Figure 2.6.6.3-3. Pilot Strength Measurements Triggered by a Candidate Pilot if $P\_REV\_IN\_USE_s$ = 3 or $SOFT\_SLOPE_s$ = '000000'

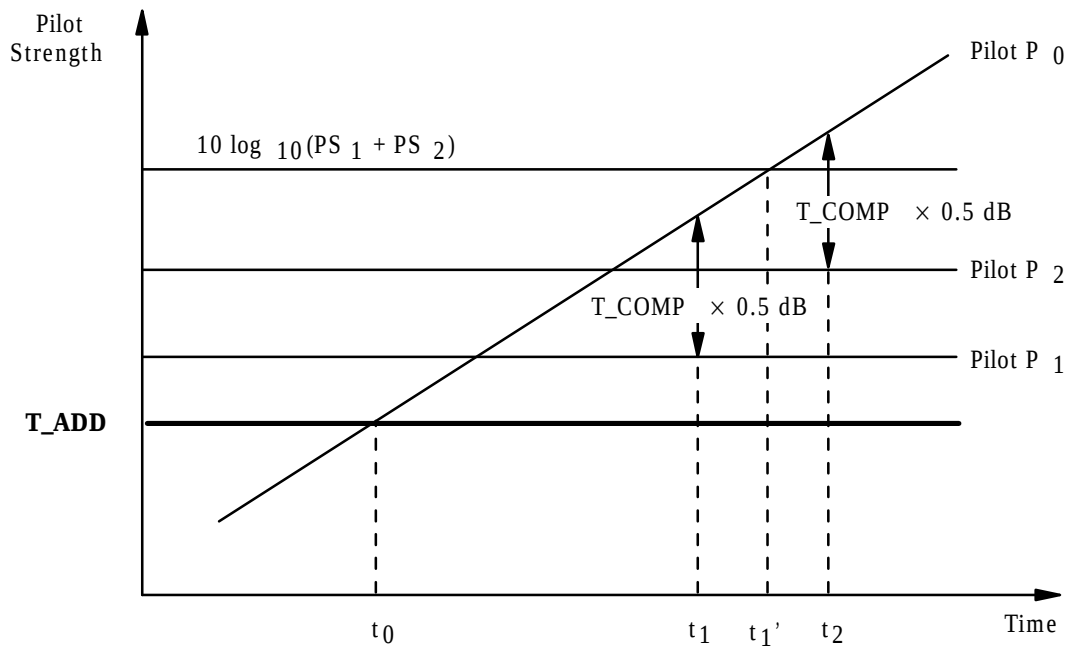

Candidate Set: Pilot P_0

Active Set: Pilots P_1, P_2

t_0 – *Pilot Strength Measurement Message* not sent because
$[10 \times \log_{10}(PS_0)] < [(SOFT\_SLOPE/8) \times 10 \times \log_{10}(PS_1 + PS_2) + ADD\_INTERCEPT/2]$

t_1 – *Pilot Strength Measurement Message* not sent because
$P_0 > [P_1 + T\_COMP \times 0.5\ dB]$ but
$[10 \times \log_{10}(PS_0)] < [(SOFT\_SLOPE/8) \times 10 \times \log_{10}(PS_1 + PS_2) + ADD\_INTERCEPT/2]$

t_1' – *Pilot Strength Measurement Message* sent because
$[10 \times \log_{10}(PS_0)] > [(SOFT\_SLOPE/8) \times 10 \times \log_{10}(PS_1 + PS_2) + ADD\_INTERCEPT/2]$

t_2 – *Pilot Strength Measurement Message* sent because
$P_0 > [P_2 + T\_COMP \times 0.5\ dB]$ and
$[10 \times \log_{10}(PS_0)] > [(SOFT\_SLOPE/8) \times 10 \times \log_{10}(PS_1 + PS_2) + ADD\_INTERCEPT/2]$

Figure 2.6.6.3-4. Pilot Strength Measurements Triggered by a Candidate Pilot if $P\_REV\_IN\_USE_s > 3$ and $SOFT\_SLOPE_s$ is Not Equal to'000000'

2.6.7 Hash Functions and Randomization

2.6.7.1 Hash Function

Certain procedures require a uniform distribution of mobile stations among N resources. The following function returns an integer, using as arguments the mobile station's IMSI, the number of resources N, and a modifier DECORR. The modifier serves to decorrelate the values obtained for the various applications from the same mobile station.

HASH_KEY shall be equal to the 32 least significant bits of (IMSI_O_S1 + 2^{24} × IMSI_O_S2).

Define:

- Word L to be bits 0-15 of HASH_KEY
- Word H to be bits 16-31 of HASH_KEY

where bit 0 is the least significant bit of HASH_KEY.

For determining CDMA Band, CDMA Channel Number, Paging Channel Number, Forward Common Control Channel Number, Quick Paging Channel Number, and Paging Slot Number, the hash value is computed as follows:[41]

$$R = \lfloor N \times ((40503 \times (L \oplus H \oplus DECORR)) \bmod 2^{16}) / 2^{16} \rfloor.$$

For determining a mobile station's assigned paging indicator bit positions, the hash value is computed as follows:

$$R_1 = \lfloor N \times ((40503 \times (L \oplus H \oplus DECORR_1)) \bmod 2^{16}) / 2^{16} \rfloor,$$

and

$$R_2 = \lfloor ((1 - \lfloor (2 \times R_1)/(N+4) \rfloor) \times (N+4)/2 + \lfloor (2 \times R_1)/(N+4) \rfloor \times ((N+4)/2 - 4)) \times ((40503 \times (L \oplus H \oplus DECORR_2)) \bmod 2^{16}) / 2^{16} \rfloor + N + 4 + \lfloor (2 \times R_1)/(N+4) \rfloor \times ((N+4)/2)$$ for Quick Paging Channel indicator rate of 4800 bps, or

$$R_2 = \lfloor ((1 - \lfloor (2 \times R_1)/(N+8) \rfloor) \times (N+8)/2 + \lfloor (2 \times R_1)/(N+8) \rfloor \times ((N+8)/2 - 8)) \times ((40503 \times (L \oplus H \oplus DECORR_2)) \bmod 2^{16}) / 2^{16} \rfloor + N + 8 + \lfloor (2 \times R_1)/(N+8) \rfloor \times ((N+8)/2)$$ for Quick Paging Channel indicator rate of 9600 bps.

The mobile station shall choose the range N and the modifiers DECORR, $DECORR_1$, and $DECORR_2$ according to the application as shown in Table 2.6.7.1-1. In the table, HASH_KEY [0...11] denotes the 12 least significant bits of HASH_KEY.

[41] This formula is adapted from Knuth, Donald N., *The Art of Computer Programming*, 2 volumes, (Reading, MA, Addison-Wesley, 1998).

Table 2.6.7.1-1. Hash Function Modifier

Application	N	DECORR	Return Value
CDMA Band Number	Number of band entries	$2 \times$ HASH_KEY [0…11]	R + 1
CDMA Channel Number	Number of channel entries	0	R + 1
Paging Channel Number	$PAGE\_CHAN_S$ from *System Parameters Message* (up to 7)	$2 \times$ HASH_KEY [0…11]	R + 1
Quick Paging Channel Number	NUM_QPCH_S from *Extended System Parameters Message* or *MC-RR Parameters Message* (up to 3)	$2 \times$ HASH_KEY [0…11]	R + 1
Paging Slot Number	2048	$6 \times$ HASH_KEY[0…11]	R
Paging Indicator Positions	376 (for 9600 bps), 188 (for 4800 bps)	$DECORR_1 = \lfloor t/64 \rfloor \bmod 2^{16}$, $DECORR_2 = \lfloor t/64 + 1 \rfloor \bmod 2^{16}$, where t is the System Time in 20ms frames, relative to the beginning of the assigned Quick Paging Channel slot.	R_1 and R_2
Forward Common Control Channel Number	NUM_FCCCH_S from *MC-RR Parameters Message* (up to 7)	$2 \times$ HASH_KEY [0…11]	R + 1

2.6.7.2 Pseudorandom Number Generator

Where pseudorandom numbers are needed, a linear congruential generator shall be used. The mobile station shall implement the linear congruential generator defined by:

$$z_n = a \times z_{n-1} \bmod m$$

where $a = 7^5 = 16807$ and $m = 2^{31} - 1 = 2147483647$. z_n is the output of the generator.[42]

[42] This generator has full period, ranging over all integers from 1 to m-1; the values 0 and m are never produced. Several suitable implementations can be found in Park, Stephen K. and Miller,

(footnote continued on next page)

During the *Mobile Station Initialization State*, the mobile station shall seed its generator with

$$z_0 = (ESN \oplus RANDOM\_TIME) \bmod m$$

where RANDOM_TIME shall be the least-significant 32-bits of SYS_TIME_S stored from the *Sync Channel Message*. If the initial value so produced is found to be zero, it shall be replaced with one. The mobile station shall compute a new z_n for each subsequent use.

The mobile station shall use the value $u_n = z_n / m$ for those applications that require a binary fraction u_n, $0 < u_n < 1$.

The mobile station shall use the value $k_n = \lfloor N \times z_n / m \rfloor$ for those applications that require a small integer k_n, $0 \le k_n \le N - 1$.

2.6.8 $CODE\_CHAN\_LIST_S$ Maintenance

The $CODE\_CHAN\_LIST_S$ is a descriptive structure used to manage the Forward Fundamental Channel and Forward Supplemental Code Channels, if any, associated with the mobile station's Active Set. Associated with each member of the mobile station's Active Set, there is an ordered array of code channels. The first entry of the ordered array specifies the Forward Fundamental Channel associated with the pilot and the subsequent entries, if any, specify the Forward Supplemental Code Channels associated with the pilot. The $CODE\_CHAN\_LIST_S$ is the collection of ordered arrays of code channels for each member of the mobile station's Active Set. The ith entry in every array (of code channels associated with a member of the Active Set) corresponds to the ith code channel.

The mobile station shall maintain the $CODE\_CHAN\_LIST_S$ as follows:

- When the mobile station is first assigned a Forward Fundamental Channel, it shall initialize the $CODE\_CHAN\_LIST_S$ to contain the Forward Fundamental Channel for each member of the Active Set.
- When the mobile station processes the *Extended Handoff Direction Message*, the mobile station shall update the $CODE\_CHAN\_LIST_S$ as follows:
  - For each pilot listed in the *Extended Handoff Direction Message* which does not have a corresponding code channel in the $CODE\_CHAN\_LIST_S$, the mobile station shall add the code channel, CODE_CHAN, of that pilot to the $CODE\_CHAN\_LIST_S$, as the Forward Fundamental Channel for the pilot.
  - The mobile station shall delete all information in the $CODE\_CHAN\_LIST_S$ associated with a pilot that is not included in the *Extended Handoff Direction Message*.

Keith W., "Random Number Generators: Good Ones are Hard to Find," *Communications of the ACM*, vol. 31, no. 10, October 1988, pp. 1192-1201.

- When the mobile station processes the *General Handoff Direction Message*, the mobile station shall update the $CODE\_CHAN\_LIST_S$ to contain the Forward Fundamental Channel associated with each pilot included in the *General Handoff Direction Message*. The first code channel occurrence associated with each pilot included in the *General Handoff Direction Message* corresponds to the Forward Fundamental Channel. The mobile station shall perform the following:
  - If $FOR\_SUP\_CONFIG_r$ is included and $FOR\_SUP\_CONFIG_r$ is equal to '10' or '11', the mobile station shall perform the following actions:
    - For each pilot listed in the *General Handoff Direction Message*, the mobile station shall set the Forward Supplemental Code Channels (associated with the pilot) in the $CODE\_CHAN\_LIST_S$ to the Forward Supplemental Code Channels specified in the *General Handoff Direction Message*.
    - The mobile station shall delete all information in the $CODE\_CHAN\_LIST_S$ associated with a pilot that is not included in the *General Handoff Direction Message*.
  - If $FOR\_SUP\_CONFIG_r$ is equal to '00' or '01' or if $FOR\_SUP\_CONFIG_r$ is not included in the *General Handoff Direction Message*, the mobile station shall not update Supplemental Code Channels associated with the pilots included in the *General Handoff Direction Message*. The mobile station shall perform the following actions:
    - For each pilot listed in the *General Handoff Direction Message* which does not have a corresponding code channel in the $CODE\_CHAN\_LIST_S$, the mobile station shall add the code channel, CODE_CHAN, of that pilot to the $CODE\_CHAN\_LIST_S$, as the Forward Fundamental Channel for the pilot.
    - The mobile station shall delete all information in the $CODE\_CHAN\_LIST_S$ associated with a pilot that is not included in the *General Handoff Direction Message*.
- When the mobile station processes the *Supplemental Channel Assignment Message* it shall follow the following rules:
  - If $FOR\_SUP\_CONFIG_r$ is equal to '10' or '11', the mobile station shall update the Forward Supplemental Code Channels for each pilot in the Active Set.
  - If the pilot is not listed in the *Supplemental Channel Assignment Message*, the mobile station shall delete all occurrences of Forward Supplemental Code Channels associated with the pilot from the Code Channel List.
  - If a pilot is listed in the *Supplemental Channel Assignment Message*, then the mobile station shall set the Forward Supplemental Code Channels (associated with the pilot) in the $CODE\_CHAN\_LIST_S$ to the Forward Supplemental Code Channels specified in the *Supplemental Channel Assignment Message*.
  - If $FOR\_SUP\_CONFIG_r$ is equal to '00' or '01', the mobile station shall not update Supplemental Code Channels associated with the pilots included in the *Supplemental Channel Assignment Message*.

2.6.9 CDMA Tiered Services

This section presents an overview and mobile station requirements for the support of CDMA Tiered services while the mobile station is in the *Mobile Station Idle State* and in the *Mobile Station Control on the Traffic Channel State*.

2.6.9.1 Overview

2.6.9.1.1 Definition

The mobile station may support Tiered Services based upon User Zones. Tiered Services provide the user custom services and special features based upon the mobile station location. Tiered Services also provides private network support. Important to the operation of CDMA Tiered Services is the concept of User Zones. It is via User Zones by which the base station offers custom services based upon the mobile station location.

User Zones are associated with a set of features and services, plus a geographic area in which the User Zone features/services are made available to the customers that have subscribed to that User Zone. The boundary of the User Zone Geographic area may be established based on the coverage area of a public or private base station or it may be established independent of RF topology.

User Zones may be supported by the public system on the same frequency as the serving base station, or they may be supported on a private system operating on a different frequency.

2.6.9.1.2 Types of User Zones

User Zones may be of two basic types:

- *Broadcast User Zones*: Broadcast User Zones are identified to the mobile station using the Paging Channel or the Primary Broadcast Control Channel. In this case, the base station broadcasts on the Paging Channel or the Primary Broadcast Control Channel messages identifying the User Zones that fall within the coverage area of the particular cell/sector. Mobile stations, as part of their monitoring of the Paging Channel or the Primary Broadcast Control Channel, will identify the presence of a particular User Zone.
- *Mobile Specific User Zones*: Mobile Specific User Zones are not broadcast by the base station. The mobile station may use other overhead message parameters and compare them with internally stored User Zone parameters to identify the presence of a particular User Zone. These parameters may include: SID, NID, BASE_ID, BASE_LAT, and BASE_LONG.

Broadcast User Zones allow for permanent as well as temporary subscription. Temporary subscription provides User Zone features and capabilities to users who are not subscribed to the User Zone. In this case, a mobile station, upon entering a new coverage area, may detect the presence of a User Zone that it presently does not subscribe to, but one that supports temporary subscription. The mobile station then queries the network to obtain the User Zone parameters. Once these parameters are received, the mobile station offers to the user via the mobile station user interface, the option of subscribing to the particular

User Zone.

Some User Zones may require active registration (Active User Zones) upon the mobile station's entry to immediately trigger a change in a feature(s). For others, the implicit registration at call setup is sufficient (Passive User Zones). Active User Zones are used where inbound features change as a result of being in the User Zone. During the *Mobile Station Idle State*, a mobile stations needs to register to update the User Zone ID whenever the User Zone that the mobile station is entering and/or leaving is of the Active type.

A mobile station that supports User Zone services may store a list of User Zones, where each User Zone is identified by a User Zone ID (UZID). Associated with each stored User Zone, the mobile station may also store a number of determinant parameters used for identifying User Zones.

2.6.9.2 Requirements

If the mobile station supports User Zone services, it shall maintain and update $UZID_S$ according the following rule:

If the mobile station selects a User Zone supported by the base station, the mobile station shall set $UZID_S$ to the User Zone Identifier associated with the User Zone; otherwise, the mobile station shall set $UZID_S$ to '0000000000000000'. The precise process for determining how to select a User Zone that is supported by the base station is left to the mobile station manufacturer.

If the mobile station does not support User Zone services, the mobile station shall set $UZID_S$ to '0000000000000000'.

The mobile station may search pilots of private neighbor base stations on other frequencies and band classes as identified in the *Private Neighbor List Message*. Search performance criteria are defined [11].

2.6.9.2.1 User Zone Operation in the Mobile Station Idle State:

When a mobile station performs an idle handoff, it selects User Zones based on internally stored parameters and information broadcast on the Paging Channel or on the Primary Broadcast Control Channel as described in 2.6.9.1.

After the mobile station performs idle handoff, if the mobile station determines that a change from one Broadcast User Zone to another Broadcast User Zone is required, the mobile station shall not update $UZID_S$, $UZ\_EXIT\_IN\_USE_S$ and shall not perform User Zone registration until the pilot strength of the currently serving base station exceeds that of the base station corresponding to the old User Zone by the value of $UZ\_EXIT\_IN\_USE_S$.

If the mobile station determines that it needs to change User Zone, and if the difference between the pilot strengths exceeds $UZ\_EXIT\_IN\_USE_S$, then the mobile station shall perform the following:

- Perform User Zone registration.
- Update $UZID_S$.
- Set $UZ\_EXIT\_IN\_USE_S$ to $UZ\_EXIT\_RCVD_S$.

The mobile station may also implement other means to avoid the premature exiting of a User Zone due to rapid changes in signal strength. The exact implementation of such techniques is left to mobile station implementation.

If the mobile station is in the *Mobile Station Idle State* and it receives a *User Zone Reject Message* the mobile station shall perform the following:

- Set $REJECT\_ACTION\_INDI_s$ to $REJECT\_ACTION\_INDI_r$.
- If $UZID\_ASSIGN\_INCL_r$ = '0', the mobile station shall set $UZID_s$ to '0000000000000000', otherwise; the mobile station shall set $UZID_s$ to $ASSIGN\_UZID_r$.

If the mobile station is in the *Mobile Station Idle State* and it selects an active User Zone, then the mobile station shall perform User Zone registration (see 2.6.5.1.10) by entering the *System Access State* with a registration indication.

The mobile station should provide the user with a User Zone indication corresponding to the User Zone in service each time $UZID_s$ is updated.

2.6.9.2.2 User Zone Operation in the Mobile Station Control on the Traffic Channel State

If the mobile station is in the *Traffic Channel Substate* of the *Mobile Station Control on the Traffic Channel State* and if it determines that the User Zone has changed, it shall update $UZID_s$ and send a *User Zone Update Request Message* to the base station.

If the mobile station is in the *Traffic Channel Substate or Release Substate* of the *Mobile Station Control on the Traffic Channel State* and it receives a *User Zone Update Message*, then the mobile station shall update $UZID_s$ and set it equal to $UZID_r$.

If the mobile station is in the *Traffic Channel Substate or Release Substate* of the *Mobile Station Control on the Traffic Channel State* and it receives a *User Zone Reject Message*, then the mobile station shall perform the following:

- Set $REJECT\_ACTION\_INDI_s$ to $REJECT\_ACTION\_INDI_r$.
- If $UZID\_ASSIGN\_INCL_r$ = 0, the mobile station shall set $UZID_s$ to '0', otherwise; the mobile station shall set $UZID_s$ to $ASSIGN\_UZID_r$.

The mobile station should provide the user with a User Zone indication corresponding to the User Zone in service each time $UZID_s$ is updated.

2.6.10 Call Control Processing

As illustrated in Figure 2.6.10-1, the Call Control consists of the following states:

- *Waiting for Order Substate* - In this substate, the Call Control instance waits for an *Alert With Information Message* or an *Extended Alert With Information Message*.
- *Waiting for Mobile Station Answer Substate* - In this substate, the Call Control instance waits for the user to answer the call.
- *Conversation Substate* - In this substate, the parties involved in this call communicate.

- *Call Release Substate* - In this substate, the Call Control instance waits for the call to be disconnected.

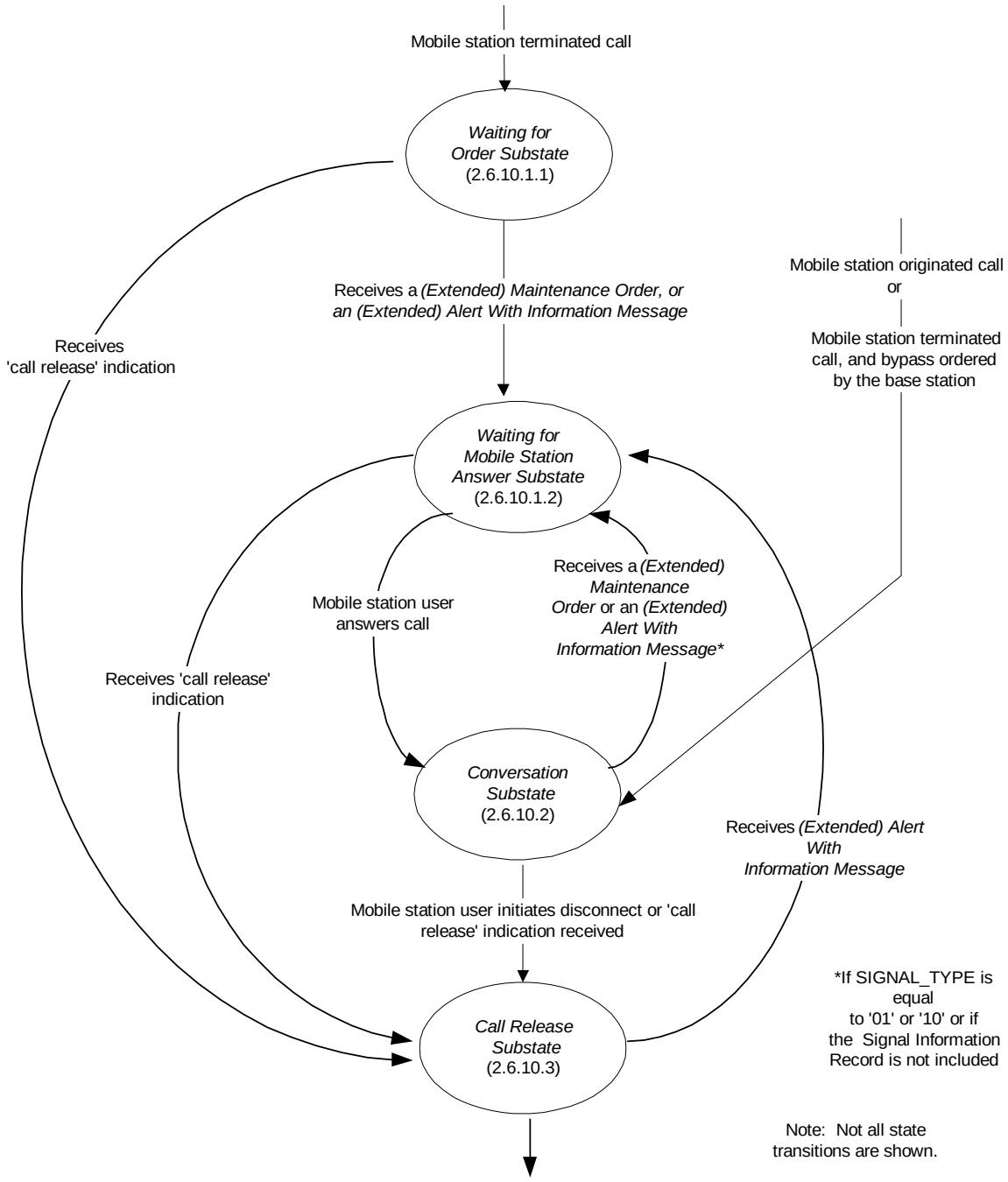

Figure 2.6.10-1. Call Control

The following messages are processed by the Call Control:

- *Alert With Information Message*
- *Extended Alert with Information Message:*
- *Flash With Information Message*
- *Extended Flash With Information Message*
- *Send Burst DTMF Message*
- *Origination Continuation Message*

The following orders are processed by the Call Control:

- *Continuous DTMF Tone Order*
- *Maintenance Order*
- *Connect Order*

Upon instantiation, the Call Control instance shall perform the following:

- If this Call Control instance is instantiated with a 'restore indication', the Call Control instance shall enter the *Conversation Substate*.
- If the call is mobile station terminated, and BYPASS_ALERT_ANSWER$_S$ is '1', the Call Control instance shall perform the following:
  - The Call Control instance shall enter the *Conversation Substate*.
  - The mobile station shall not connect the audio input, e.g., the microphone of the mobile station, to the reverse link without the knowledge of the user.
- If the call is mobile station terminated and BYPASS_ALERT_ANSWER$_S$ is '0', the Call Control instance shall enter the *Waiting for Order Substate*.
- If the call is mobile station originated, the Call Control instance shall enter the *Conversation Substate*.

2.6.10.1 Alerting

2.6.10.1.1 Waiting for Order Substate

In this substate, the Call Control instance waits for an *Alert With Information Message* or an *Extended Alert With Information Message*.

Upon entering the *Waiting for Order Substate*, the Call Control instance shall set the substate timer for T_{52m} seconds.

While in the *Waiting for Order Substate*, the Call Control instance shall perform the following:

- If the substate timer expires, the Call Control instance shall send a "substate timer expired indication" to the Layer 3 and shall enter the *Call Release Substate*.

- If the Call Control instance receives a "reset waiting for order substate timer indication" from the Layer 3, the Call Control instance shall reset the substate timer for T_{52m} seconds.

- If the Call Control instance receives a "release indication" from the Layer 3, the Call Control instance shall enter the *Call Release Substate*.

- If the Call Control instance receives an indication that the user has originated an emergency call (see 2.6.4.3), the mobile station shall send a *Flash With Information Message* or an *Extended Flash With Information Message* in assured mode with a Global Emergency Call Information Record (see 2.7.4.31), as follows:

  - If this Call Control instance is identified by NULL, the mobile station shall send either a *Flash With Information Message* or an *Extended Flash With Information Message* (with either the CON_REF_INCL field of the message set to '0' or the CON_REF_INCL field set to '1' and the CON_REF field set to the connection reference of the service option connection corresponding to this call); otherwise, the mobile station shall send an *Extended Flash With Information Message*, with the CON_REF_INCL field of the message set to '1' and the CON_REF field of the message set to the connection reference of the service option connection corresponding to this call.

- If the Call Control instance receives a message from the Layer 3 which is included in the following list and every message field value is within its permissible range, the Call Control instance shall process the message as described below and in accordance with the message's action time (see 2.6.4.1.5).

  1. *Alert With Information Message:* If the message contains a Signal information record, the mobile station should alert the user in accordance with the Signal information record; otherwise, the mobile station should use standard alert as defined in 3.7.5.5. The Call Control instance shall enter the *Waiting for Mobile Station Answer Substate* (see 2.6.10.1.2).

  2. *Extended Alert with Information Message:* If the message contains a Signal information record, the mobile station should alert the user in accordance with the Signal information record; otherwise, the mobile station should use standard alert as defined in 3.7.5.5. The Call Control instance shall enter the *Waiting for Mobile Station Answer Substate* (see 2.6.10.1.2).

  3. *Maintenance Order:* The Call Control instance shall enter the *Waiting for Mobile Station Answer Substate*.

- If the Call Control instance receives a message that is not included in the above list, cannot be processed, or requires a capability which is not supported, the Call Control instance shall discard the message and send a 'message rejected indication' to the Layer 3, with the reject reason indicated except when the following condition applies.

  - If the Call Control instance fails to meet the criteria solely due to receipt of the Extended Record Type – International information record, the information record shall be discarded and the message shall be processed in accordance with the above procedures specified for the applicable message.

2.6.10.1.2 Waiting for Mobile Station Answer Substate

In this substate, the Call Control instance waits for the user to answer the mobile station terminated call or to invoke special treatment.

Upon entering the *Waiting for Mobile Station Answer Substate*, the Call Control instance shall set the substate timer for T_{53m} seconds.

While in the *Waiting for Mobile Station Answer Substate*, the Call Control instance shall perform the following:

- If the substate timer expires, the Call Control instance shall send a "substate timer expired indication" to the Layer 3 and shall enter the *Call Release Substate*.

- If the Call Control instance receives a "release indication" from the Layer 3, the Call Control instance shall enter the *Call Release Substate*.

- If the Call Control instance is directed by the user to answer the call, the mobile station shall send a *Connect Order* in assured mode:

  - If $P\_REV\_IN\_USE_S$ is equal to or greater than seven, the mobile station shall perform the following: If this Call Control instance is identified by NULL, the mobile station shall either set the CON_REF_INCL field of the message to '0' or set the CON_REF_INCL field to '1' and set the CON_REF field to the connection reference of the service option connection corresponding to this call; otherwise, the mobile station shall set the CON_REF_INCL field of the message to '1' and the CON_REF field of the message to the connection reference of the service option connection corresponding to this call.

  The Call Control instance shall enter the *Conversation Substate*.

- If the Call Control instance is directed by the user to forward the incoming call, the mobile station shall send a *Flash With Information Message* or an *Extended Flash With Information Message* in assured mode with a *Keypad Facility* information record (see 2.7.4.2) or the *Extended Keypad Facility* information record (see 2.7.4.35) with the CHARi field set to a pre-programmed feature code which indicates User Selective Call Forwarding with a pre-registered number, as follows:

- If $P\_REV\_IN\_USE_S$ is less than seven, the mobile station shall send a *Flash With Information Message*.

- If $P\_REV\_IN\_USE_S$ is equal to or greater than seven, the mobile station shall perform the following: if this Call Control instance is identified by NULL, the mobile station shall send either a *Flash With Information Message* or an *Extended Flash With Information Message* (with either the CON_REF_INCL field of the message set to '0' or the CON_REF_INCL field set to '1' and the CON_REF field set to the connection reference of the service option connection corresponding to this call); otherwise, the mobile station shall send an *Extended Flash With Information Message*, with the CON_REF_INCL field of the message set to '1' and the CON_REF field of the message set to the connection reference of the service option connection corresponding to this call.

• If the Call Control instance is directed by user to forward the incoming call to a number stored in the mobile station, the mobile station shall send a *Flash With Information Message* or an *Extended Flash With Information Message* in assured mode with a *Keypad Facility* information record (see 2.7.4.2) or the *Extended Keypad Facility* information record (see 2.7.4.35) with the CHARi field set to the following:

  - a pre-programmed feature code which indicates User Selective Call Forwarding to a number stored in the mobile station as the first digits in the field and

  - the forwarding to number immediately following the pre-programmed feature code.

  The mobile station shall send the message as follows:

  - If $P\_REV\_IN\_USE_S$ is less than seven, the mobile station shall send a *Flash With Information Message*.

  - If $P\_REV\_IN\_USE_S$ is equal to or greater than seven, the mobile station shall perform the following: if this Call Control instance is identified by NULL, the mobile station shall send either a *Flash With Information Message* or an *Extended Flash With Information Message* (with either the CON_REF_INCL field of the message set to '0' or the CON_REF_INCL field set to '1' and the CON_REF field set to the connection reference of the service option connection corresponding to this call); otherwise, the mobile station shall send an *Extended Flash With Information Message*, with the CON_REF_INCL field of the message set to '1' and the CON_REF field of the message set to the connection reference of the service option connection corresponding to this call.

- If the Call Control instance is directed by the user to forward the incoming call to network-based voice mail, the mobile station shall send a *Flash With Information Message* or an *Extended Flash With Information Message* in assured mode with a *Keypad Facility* information record (see 2.7.4.2) or the *Extended Keypad Facility* information record (see 2.7.4.35) with the CHARi field set to a pre-programmed feature code which indicates User Selective Call Forwarding to voice mail, as follows:

  - If $P\_REV\_IN\_USE_S$ is less than seven, the mobile station shall send a *Flash With Information Message*.

  - If $P\_REV\_IN\_USE_S$ is equal to or greater than seven, the mobile station shall perform the following: if this Call Control instance is identified by NULL, the mobile station shall send either a *Flash With Information Message* or an *Extended Flash With Information Message* (with either the CON_REF_INCL field of the message set to '0' or the CON_REF_INCL field set to '1' and the CON_REF field set to the connection reference of the service option connection corresponding to this call); otherwise, the mobile station shall send an *Extended Flash With Information Message*, with the CON_REF_INCL field of the message set to '1' and the CON_REF field of the message set to the connection reference of the service option connection corresponding to this call.

- If the Call Control instance is directed by the user to activate answer holding, the mobile station shall send a *Flash With Information Message* or an *Extended Flash With Information Message* in assured mode requiring confirmation of delivery with a *Keypad Facility* information record (see 2.7.4.2) or the *Extended Keypad Facility* information record (see 2.7.4.35) with the CHARi field set to a pre-programmed feature code which indicates Answer Holding:

  - If $P\_REV\_IN\_USE_S$ is less than seven, the mobile station shall send a *Flash With Information Message*.

  - If $P\_REV\_IN\_USE_S$ is equal to or greater than seven, the mobile station shall perform the following: if this Call Control instance is identified by NULL, the mobile station shall send either a *Flash With Information Message* or an *Extended Flash With Information Message* (with either the CON_REF_INCL field of the message set to '0' or the CON_REF_INCL field set to '1' and the CON_REF field set to the connection reference of the service option connection corresponding to this call); otherwise, the mobile station shall send an *Extended Flash With Information Message*, with the CON_REF_INCL field of the message set to '1' and the CON_REF field of the message set to the connection reference of the service option connection corresponding to this call.

After receiving confirmation of delivery of the *Flash With Information Message* or the *Extended Flash With Information Message*, the mobile station shall send a *Connect Order* in assured mode:

- If $P\_REV\_IN\_USE_S$ is equal to or greater than seven, the mobile station shall perform the following: If this Call Control instance is identified by NULL, the mobile station shall either set the CON_REF_INCL field of the message to '0' or set the CON_REF_INCL field to '1' and set the CON_REF field to the connection reference of the service option connection corresponding to this call; otherwise, the mobile station shall set the CON_REF_INCL field of the message to '1' and the CON_REF field of the message to the connection reference of the service option connection corresponding to this call.

The Call Control instance shall enter the *Conversation Substate*.

- If the Call Control instance receives an indication that the user has originated an emergency call (see 2.6.4.3), the mobile station shall send a *Flash With Information Message* or an *Extended Flash With Information Message* in assured mode with a Global Emergency Call Information Record (see 2.7.4.31), as follows:

  - If this Call Control instance is identified by NULL, the mobile station shall send either a *Flash With Information Message* or an *Extended Flash With Information Message* (with either the CON_REF_INCL field of the message set to '0' or the CON_REF_INCL field set to '1' and the CON_REF field set to the connection reference of the service option connection corresponding to this call); otherwise, the mobile station shall send an *Extended Flash With Information Message*, with the CON_REF_INCL field of the message set to '1' and the CON_REF field of the message set to the connection reference of the service option connection corresponding to this call.

- If the Call Control instance receives a message from Layer 3 which is included in the following list and every message field value is within its permissible range, the Call Control instance shall process the message as described below and in accordance with the message's action time (see 2.6.4.1.5).

  1. *Alert With Information Message:* The Call Control instance shall reset the substate timer for T_{53m} seconds. If this message does not contain a Signal information record, the mobile station should use standard alert as defined in 3.7.5.5.

  2. *Extended Alert With Information Message:* The Call Control instance shall reset the substate timer for T_{53m} seconds. If this message does not contain a Signal information record, the mobile station should use standard alert as defined in 3.7.5.5.

  3. *Maintenance Order:* The mobile station shall reset the substate timer for T_{53m} seconds.

- If the Call Control instance receives a message that is not included in the above list, cannot be processed, or requires a capability which is not supported, the Call Control instance shall discard the message and send a 'message rejected indication' to the Layer 3, with the reject reason indicated except when the following condition applies.

  - If the Call Control instance fails to meet the criteria solely due to receipt of the Extended Record Type – International information record, the information record shall be discarded and the message shall be processed in accordance with the above procedures specified for the applicable message.

2.6.10.2 Conversation Substate

While in the *Conversation Substate*, the Call Control instance shall perform the following:

- If the Call Control instance receives a "release indication" from the Layer 3, the Call Control instance shall enter the *Call Release Substate*.

- The mobile station shall send an *Origination Continuation Message* in assured mode, within T_{54m} seconds after the Call Control instance entering *the Conversation Substate* if any of the following conditions occur:

  – The mobile station originated the call, and did not send all the dialed digits in the *Origination Message*.

  – There is more than one calling party number associated with the mobile station.

  – A calling party subaddress is used in the call.

  – A called party subaddress is used in the call.

  If more than one calling party number is associated with the mobile station, the mobile station shall include the calling party number being used in the calling party number information record in the *Origination Continuation Message*. If only one calling party number is associated with the mobile station, the mobile station shall not include the calling party number information record in the *Origination Continuation Message*. If a calling party subaddress is used, the mobile station shall include the calling party subaddress information record in the *Origination Continuation Message*: otherwise, the mobile station shall omit the calling party subaddress information record. If a called party subaddress is used, the mobile station shall include the called party subaddress information record in the *Origination Continuation Message*: otherwise, the mobile station shall omit the called party subaddress information record.

- If the Call Control instance is directed by the user to issue a flash, the mobile station shall build a *Flash With Information Message* or an *Extended Flash With Information Message* with the collected digits or characters contained in a *Keypad Facility* information record, if needed, and shall send the message in assured mode, as follows:

  - If $P\_REV\_IN\_USE_S$ is less than seven, the mobile station shall send a *Flash With Information Message*.

  - If $P\_REV\_IN\_USE_S$ is equal to or greater than seven, the mobile station shall perform the following: if this Call Control instance is identified by NULL, the mobile station shall send either a *Flash With Information Message* or an *Extended Flash With Information Message* (with either the CON_REF_INCL field of the message set to '0' or the CON_REF_INCL field set to '1' and the CON_REF field set to the connection reference of the service option connection corresponding to this call); otherwise, the mobile station shall send an *Extended Flash With Information Message*, with the CON_REF_INCL field of the message set to '1' and the CON_REF field of the message set to the connection reference of the service option connection corresponding to this call.

- If the Call Control instance is directed by the user to forward the incoming call, the mobile station shall send a *Flash With Information Message* or an *Extended Flash With Information Message* in assured mode with a *Keypad Facility* information record (see 2.7.4.2) or the *Extended Keypad Facility* information record (see 2.7.4.35) with the CHARi field set to a pre-programmed feature code which indicates User Selective Call Forwarding with a pre-registered number, as follows:

  - If $P\_REV\_IN\_USE_S$ is less than seven, the mobile station shall send a *Flash With Information Message*.

  - If $P\_REV\_IN\_USE_S$ is equal to or greater than seven, the mobile station shall perform the following: if this Call Control instance is identified by NULL, the mobile station shall send either a *Flash With Information Message* or an *Extended Flash With Information Message* (with either the CON_REF_INCL field of the message set to '0' or the CON_REF_INCL field set to '1' and the CON_REF field set to the connection reference of the service option connection corresponding to this call); otherwise, the mobile station shall send an *Extended Flash With Information Message*, with the CON_REF_INCL field of the message set to '1' and the CON_REF field of the message set to the connection reference of the service option connection corresponding to this call.

- If the Call Control instance is directed by the user to forward the incoming call to a number stored in the mobile station, the mobile station shall send a *Flash With Information Message* or an *Extended Flash With Information Message* in assured mode with a *Keypad Facility* information record (see 2.7.4.2) or the *Extended Keypad Facility* information record (see 2.7.4.35) with the CHARi field set to the following:

- a pre-programmed feature code which indicates User Selective Call Forwarding to a number stored in the mobile station as the first digits in the field and
- the forwarding to number immediately following the pre-programmed feature code.

The mobile station shall send the message as follows:

- If $P\_REV\_IN\_USE_S$ is less than seven, the mobile station shall send a *Flash With Information Message*.
- If $P\_REV\_IN\_USE_S$ is equal to or greater than seven and if this Call Control instance is identified by NULL, the mobile station shall send either a *Flash With Information Message* or an *Extended Flash With Information Message* (with either the CON_REF_INCL field of the message set to '0' or the CON_REF_INCL field set to '1' and the CON_REF field set to the connection reference of the service option connection corresponding to this call). Otherwise, the mobile station shall send an *Extended Flash With Information Message*, with the CON_REF_INCL field of the message set to '1' and the CON_REF field of the message set to the connection reference of the service option connection corresponding to this call.

• If the Call Control instance is directed by the user to forward the incoming call to network-based voice mail, the mobile station shall send a *Flash With Information Message* or an *Extended Flash With Information Message* in assured mode with a *Keypad Facility* information record (see 2.7.4.2) or the *Extended Keypad Facility* information record (see 2.7.4.35) with the CHARi field set to a pre-programmed feature code which indicates User Selective Call Forwarding to voice mail, as follows:

- If $P\_REV\_IN\_USE_S$ is less than seven, the mobile station shall send a *Flash With Information Message*.
- If $P\_REV\_IN\_USE_S$ is equal to or greater than seven and if this Call Control instance is identified by NULL, the mobile station shall send either a *Flash With Information Message* or an *Extended Flash With Information Message* (with either the CON_REF_INCL field of the message set to '0' or the CON_REF_INCL field set to '1' and the CON_REF field set to the connection reference of the service option connection corresponding to this call). Otherwise, the mobile station shall send an *Extended Flash With Information Message*, with the CON_REF_INCL field of the message set to '1' and the CON_REF field of the message set to the connection reference of the service option connection corresponding to this call.

- If the Call Control instance is directed by the user to activate answer holding, the mobile station shall send a *Flash With Information Message* or an *Extended Flash With Information Message* in assured mode requiring confirmation of delivery with a *Keypad Facility* information record (see 2.7.4.2) or the *Extended Keypad Facility* information record (see 2.7.4.35) with the CHARi field set to a pre-programmed feature code which indicates Answer Holding, as follows:

  - If $P\_REV\_IN\_USE_S$ is less than seven, the mobile station shall send a *Flash With Information Message*.

  - If $P\_REV\_IN\_USE_S$ is equal to or greater than seven, the mobile station shall perform the following: if this Call Control instance is identified by NULL, the mobile station shall send either a *Flash With Information Message* or an *Extended Flash With Information Message* (with either the CON_REF_INCL field of the message set to '0' or the CON_REF_INCL field set to '1' and the CON_REF field set to the connection reference of the service option connection corresponding to this call); otherwise, the mobile station shall send an *Extended Flash With Information Message*, with the CON_REF_INCL field of the message set to '1' and the CON_REF field of the message set to the connection reference of the service option connection corresponding to this call.

- If answer holding is activated and the Call Control instance is directed by the user to deactivate answer holding, the mobile station shall send a *Flash With Information Message* or an *Extended Flash With Information Message* in assured mode with a *Keypad Facility* information record (see 2.7.4.2) or the *Extended Keypad Facility* information record (see 2.7.4.35) with the CHARi field set to a pre-programmed feature code which indicates Answer Holding, as follows:

  - If $P\_REV\_IN\_USE_S$ is less than seven, the mobile station shall send a *Flash With Information Message*.

  - If $P\_REV\_IN\_USE_S$ is equal to or greater than seven, the mobile station shall perform the following: if this Call Control instance is identified by NULL, the mobile station shall send either a *Flash With Information Message* or an *Extended Flash With Information Message* (with either the CON_REF_INCL field of the message set to '0' or the CON_REF_INCL field set to '1' and the CON_REF field set to the connection reference of the service option connection corresponding to this call); otherwise, the mobile station shall send an *Extended Flash With Information Message*, with the CON_REF_INCL field of the message set to '1' and the CON_REF field of the message set to the connection reference of the service option connection corresponding to this call.

- If the Call Control instance is directed by the user to send burst DTMF digits, the mobile station shall build the *Send Burst DTMF Message* with the dialed digits and shall send the message in assured mode requiring confirmation of delivery.

- If $P\_REV\_IN\_USE_S$ is equal to or greater than seven, the mobile station shall perform the following: If this Call Control instance is identified by NULL, the mobile station shall set the CON_REF_INCL field of the message to '0'; otherwise, the mobile station shall set the CON_REF_INCL field of the message to '1' and the CON_REF field of the message to the connection reference of the service option connection corresponding to this call.

The mobile station sending multiple *Send Burst DTMF Messages* shall preserve relative ordering of these messages (see [4]). The mobile station should attempt to preserve the user timing as much as possible, using recommended values of DTMF_ON_LENGTH (see Table 2.7.2.3.2.7-1) and DTMF_OFF_LENGTH (see Table 2.7.2.3.2.7-2).

- If the Call Control instance is directed by the user to send a continuous DTMF digit, the mobile station shall build the *Continuous DTMF Tone Order* with the dialed digit and shall send the order in assured mode requiring confirmation of delivery, as follows:

  - If $P\_REV\_IN\_USE_S$ is equal to or greater than seven, the mobile station shall perform the following: If this Call Control instance is identified by NULL, the mobile station shall either set the CON_REF_INCL field of the message to '0' or set the CON_REF_INCL field to '1' and set the CON_REF field to the connection reference of the service option connection corresponding to this call; otherwise, the mobile station shall set the CON_REF_INCL field of the message to '1' and the CON_REF field of the message to the connection reference of the service option connection corresponding to this call.

  When the Call Control instance is directed by the user to cease sending the continuous DTMF digit, the mobile station shall send the *Continuous DTMF Tone Order* (ORDQ = '11111111') in assured mode requiring confirmation of delivery, as follows:

  - If $P\_REV\_IN\_USE_S$ is equal to or greater than seven, the mobile station shall perform the following: If this Call Control instance is identified by NULL, the mobile station shall either set the CON_REF_INCL field of the message to '0' or set the CON_REF_INCL field to '1' and set the CON_REF field to the connection reference of the service option connection corresponding to this call; otherwise, the mobile station shall set the CON_REF_INCL field of the message to '1' and the CON_REF field of the message to the connection reference of the service option connection corresponding to this call.

  The mobile station sending multiple *Continuous DTMF Tone Orders* shall preserve relative ordering of these messages (see [2]). The mobile station shall send the *Continuous DTMF Tone Order* with the ORDQ set to '11111111' indicating the completion of the current continuous DTMF digit before sending the *Continuous DTMF Tone Order* for another digit or the *Send Burst DTMF Message*.

- If the Call Control instance is directed by the user to disconnect the call, the Call Control instance shall send a 'call release request' to the Layer 3 and shall enter the *Call Release Substate*.

- If the Call Control instance receives an indication that this packet data service instance has been inactivated, the Call Control instance shall send a "call inactive indication" to the Layer 3 and shall enter the *Call Release Substate*.

- If the Call Control instance receives an indication that the user has originated an emergency call (see 2.6.4.3), the mobile station shall send a *Flash With Information Message* or an *Extended Flash With Information Message* in assured mode with a Global Emergency Call Information Record (see 2.7.4.31), as follows:

  – If this Call Control instance is identified by NULL, the mobile station shall send either a *Flash With Information Message* or an *Extended Flash With Information Message* (with either the CON_REF_INCL field of the message set to '0' or the CON_REF_INCL field set to '1' and the CON_REF field set to the connection reference of the service option connection corresponding to this call); otherwise, the mobile station shall send an *Extended Flash With Information Message*, with the CON_REF_INCL field of the message set to '1' and the CON_REF field of the message set to the connection reference of the service option connection corresponding to this call.

- If the Call Control instance receives a message from the Layer 3 which is included in the following list and every message field value is within its permissible range, the Call Control instance shall process the message as described below and in accordance with the message's action time (see 2.6.4.1.5).

  1. *Alert With Information Message:* If the message contains a Signal information record with the SIGNAL_TYPE field set to '01' or '10', or if the message does not contain a Signal information record, the Call Control instance shall enter the *Waiting For Mobile Station Answer Substate*. The mobile station should alert the user in accordance with the Signal information record. If this message does not contain a Signal information record, the mobile station should use standard alert as defined in 3.7.5.5.

  2. *Continuous DTMF Tone Order*

  3. *Extended Alert With Information Message:* If the message contains a Signal information record with the SIGNAL_TYPE field set to '01' or '10', or if the message does not contain a Signal information record, the Call Control instance shall enter the *Waiting For Mobile Station Answer Substate*. The mobile station should alert the user in accordance with the Signal information record. If this message does not contain a Signal information record, the mobile station should use standard alert as defined in 3.7.5.5.

  4. *Flash With Information Message*

5. *Extended Flash With Information Message*

6. *Maintenance Order:* The Call Control instance shall enter the *Waiting for Mobile Station Answer Substate*.

7. *Send Burst DTMF Message:*

- If the Call Control instance receives a message that is not included in the above list, cannot be processed, or requires a capability which is not supported, the Call Control instance shall discard the message and send a 'message rejected indication' to the Layer 3, with the reject reason indicated except when the following condition applies.

  - If the Call Control instance fails to meet the criteria solely due to receipt of the Extended Record Type – International information record, the information record shall be discarded and the message shall be processed in accordance with the above procedures specified for the applicable message.

2.6.10.3 Call Release Substate

In this substate, the Call Control instance waits for the call to be released.

While in the *Call Release Substate*, the Call Control instance shall perform the following:

- If the Call Control instance receives a message from the Layer 3 which is included in the following list and every message field value is within its permissible range, the Call Control instance shall process the message as described below and in accordance with the message's action time (see 2.6.4.1.5).

  1. *Alert With Information Message:* The Call Control instance shall send an "enter traffic channel substate indication" to the Layer 3 and shall enter the *Waiting for Mobile Station Answer Substate*. If this message does not contain a Signal information record, the mobile station should use standard alert as defined in 3.7.5.5.

  2. *Extended Alert With Information Message:* The Call Control instance shall send a "enter traffic channel substate indication" to Layer 3 and shall enter the *Waiting for Mobile Station Answer Substate*. If this message does not contain a Signal information record, the mobile station should use standard alert as defined in 3.7.5.5.

- If the Call Control instance receives a message that is not included in the above list, cannot be processed, or requires a capability which is not supported, the Call Control instance shall discard the message and send a 'message rejected indication' to the Layer 3, with the reject reason indicated except when the following condition applies.

- If the Call Control instance fails to meet the criteria solely due to receipt of the Extended Record Type – International information record, the information record shall be discarded and the message shall be processed in accordance with the above procedures specified for the applicable message.

2.6.11 Common Procedures for Extended Encryption and Message Integrity

This section describes the common procedures for the messages used for extended encryption and message integrity.

2.6.11.1 Registration Accepted Order

The mobile station shall perform the following procedures in the order listed below.

- If $ORDQ_r$ is equal to '00000101', the mobile station shall set $ROAM\_INDI_s$ to $ROAM\_INDI_r$ and should display the roaming condition.
- If $ORDQ_r$ is equal to '00000111', the mobile station shall perform the following:
  - Set $ROAM\_INDI_s$ to $ROAM\_INDI_r$ and the mobile station should display the roaming condition.
  - Set $C\_SIG\_ENCRYPT\_MODE_s$ to $C\_SIG\_ENCRYPT\_MODE_r$.
  - If $ENC\_KEY\_SIZE_r$ is included, the mobile station shall set $ENC\_KEY\_SIZE_s$ to $ENC\_KEY\_SIZE_r$.
  - If $MSG\_INTEGRITY\_SUP_s$ is equal to '0' and $C\_SIG\_ENCRYPT\_MODE_r$ is not equal to '000', the mobile station shall perform the following:
    - Set TX_EXT_SSEQ[0][KEY_ID], TX_EXT_SSEQ[1][KEY_ID], RX_EXT_SSEQ[0][KEY_ID], and RX_EXT_SSEQ[1][KEY_ID] to 1 + 256 × NEW_SSEQ_H included in the *Registration Message*.
    - Form a 128-bit pattern by concatenating the CMEAKEY with a copy of itself (the most recently generated CMEAKEY is associated with the AUTHR of the *Registration Message*).
    - Set ENC_KEY[KEY_ID] to the 128-bit pattern.
    - Set INT_KEY[KEY_ID] to the 128-bit pattern.
  - If $MSG\_INTEGRITY\_SUP_s$ is equal to '1, the mobile station shall perform the following:
    - If $CHANGE\_KEYS_r$ is equal to '0', the mobile station shall set RESTORE_KEY to '0'.
    - If $CHANGE\_KEYS_r$ is equal to '1', the mobile station shall perform the following:
      - Set KEY_ID to SDU_KEY_ID provided by the LAC Layer (see [4]).

- o Set TX_EXT_SSEQ[0][KEY_ID], TX_EXT_SSEQ[1][KEY_ID], RX_EXT_SSEQ[0][KEY_ID], and RX_EXT_SSEQ[1][KEY_ID] to 1 + 256 × NEW_SSEQ_H included in the *Registration Message*.
- o If KEY_ID is equal to ‘00’ or ‘01’, the mobile station shall perform the following:
  - ◊ Form a 128-bit pattern by concatenating the CMEAKEY with a copy of itself (the most recently generated CMEAKEY associated with the AUTHR of the *Registration Message*).
  - ◊ Set ENC_KEY[KEY_ID] to the 128-bit pattern.
  - ◊ Set INT_KEY[KEY_ID] to the 128-bit pattern.
  - ◊ Set $LAST\_2G\_KEY\_ID_s$ to KEY_ID.
- o If KEY_ID is equal to ‘10’ or ‘11’, the mobile station shall perform the following:
  - ◊ Set ENC_KEY[KEY_ID] to the CK generated by AKA.
  - ◊ Set INT_KEY[KEY_ID] to the IK generated by AKA.
  - ◊ Set $LAST\_3G\_KEY\_ID_s$ to KEY_ID.
  - ◊ If the mobile station supports R-UIM, then the mobile shall set USE_UAK_s to USE_UAK_r; otherwise, the mobile station shall perform the following:
    - – Set USE_UAK_s to ‘0’.
    - – If USE_UAK_r is equal to ‘1’, then the mobile station shall send a *Mobile Station Reject Order* with ORDQ equal to ‘00010100’ (UAK not supported).
- ◊ Set RESTORE_KEY to ‘0’.
- ◊ Send a *Security Mode Completion Order*.
- ◊ Disable the key setup timer if it is running.

+ Set $INTEGRITY\_MODE_s$ to the SDU_INTEGRITY_ALGO provided by the LAC Layer (see [4]).

– If $ENC\_KEY\_SIZE_r$ is included and not set to reserved value and if current key strength is greater than the desired key strength specified by $ENC\_KEY\_SIZE_r$ according to table 3.7.4.5-2, mobile station shall perform the key strength reduction algorithm procedures to reduce the key strength of ENC_KEY[KEY_ID] according to $ENC\_KEY\_SIZE_r$ as described in 2.3.12.5.4. The current key strength is 64 bit if KEY_ID is equal to ‘00’ or ‘01’ and is 128 bit if KEY_ID is equal to ‘10’ or ‘11’.

2.6.11.2 Extended Channel Assignment Message

The mobile station shall perform the following procedures in the order listed below.

- If $P\_REV\_IN\_USE_s$ is less than 10, or $MSG\_INTEGRITY\_SUP_s$ is equal to '0', the mobile station shall perform the following:
  - If $ENC\_KEY\_SIZE_r$ is included, the mobile station shall set $ENC\_KEY\_SIZE_s$ to $ENC\_KEY\_SIZE_r$.
  - If $D\_SIG\_ENCRYPT\_MODE_r$ is included, the mobile station shall perform the following:
    - If $D\_SIG\_ENCRYPT\_MODE_r$ is equal to '000', the mobile station shall set $D\_SIG\_ENCRYPT\_MODE_s$ to $C\_SIG\_ENCRYPT\_MODE_s$; otherwise, the mobile station shall perform the following:
      - Set $D\_SIG\_ENCRYPT\_MODE_s$ to $D\_SIG\_ENCRYPT\_MODE_r$
      - Form a 128-bit pattern by concatenating the CMEAKEY with a copy of itself (the most recently generated CMEAKEY associated with the AUTHR of the *Origination Message* or *Page Response Message*) and set TX_EXT_SSEQ[0][KEY_ID], TX_EXT_SSEQ[1][KEY_ID], RX_EXT_SSEQ[0][KEY_ID], and RX_EXT_SSEQ[1][KEY_ID] to 1 + 256 × NEW_SSEQ_H included in the *Origination Message* or *Page Response Message*[43].
      - Set ENC_KEY[KEY_ID] to the 128-bit pattern.
      - Set INT_KEY[KEY_ID] to the 128-bit pattern.
  - If $C\_SIG\_ENCRYPT\_MODE_r$ is included, the mobile station shall set $C\_SIG\_ENCRYPT\_MODE_s$ to $C\_SIG\_ENCRYPT\_MODE_r$.
- If $P\_REV\_IN\_USE_s$ is equal to or greater than 10 and $MSG\_INTEGRITY\_SUP_s$ is equal to '1', the mobile station shall perform the following:
  - If the LAC Layer indicates that the message does not contain a valid MACI, the mobile station shall set $D\_SIG\_ENCRYPT\_MODE_s$ to $C\_SIG\_ENCRYPT\_MODE_s$; otherwise, the mobile station shall perform the following:
    - Set $D\_SIG\_ENCRYPT\_MODE_s$ to $D\_SIG\_ENCRYPT\_MODE_r$.
    - If C_SIG_ENCRYPT_MODE is included, the mobile station shall set $C\_SIG\_ENCRYPT\_MODE_s$ to $C\_SIG\_ENCRYPT\_MODE_r$.
    - If $ENC\_KEY\_SIZE_r$ is included, the mobile station shall set $ENC\_KEY\_SIZE_s$ to $ENC\_KEY\_SIZE_r$.

---

[43] If the mobile station is in the *Mobile Station Origination Attempt Substate*, the NEW_SSEQ_H field shall be the one included in the *Origination Message*. If the mobile station is in the *Page Response Substate*, the NEW_SSEQ_H field shall be the one included in the *Page Response Message*.

- If $MSG\_INTEGRITY\_INFO_r$ is set to '1', the mobile station shall perform the following:
  - If $CHANGE\_KEYS_r$ is equal to '0', the mobile station shall set RESTORE_KEY to '0'.
  - If $CHANGE\_KEYS_r$ is equal to '1', the mobile station shall perform the following:
    - Set KEY_ID to SDU_KEY_ID provided by the LAC Layer (see [4]).
    - Set TX_EXT_SSEQ[0][KEY_ID], TX_EXT_SSEQ[1][KEY_ID], RX_EXT_SSEQ[0][KEY_ID], and RX_EXT_SSEQ[1][KEY_ID] to 1 + 256 × NEW_SSEQ_H included in the *Origination Message* or *Page Response Message*.
    - If KEY_ID is equal to '00' or '01', the mobile station shall perform the following:
      - Form a 128-bit pattern by concatenating the CMEAKEY with a copy of itself (the most recently generated CMEAKEY associated with the AUTHR of the *Origination Message* or *Page Response Message*).
      - Set ENC_KEY[KEY_ID] to the 128-bit pattern.
      - Set INT_KEY[KEY_ID] to the 128-bit pattern.
      - Set $LAST\_2G\_KEY\_ID_s$ to KEY_ID.
    - If KEY_ID is equal to '10' or '11', the mobile station shall perform the following:
      - Set ENC_KEY[KEY_ID] to the CK generated by AKA.
      - Set INT_KEY[KEY_ID] to the IK generated by AKA.
      - Set $LAST\_3G\_KEY\_ID_s$ to KEY_ID
      - If the mobile station supports R-UIM, then the mobile shall set USE_UAK_s to USE_UAK_r; otherwise, the mobile station shall perform the following:
        - Set USE_UAK_s to '0'.
        - If USE_UAK_r is equal to '1', then the mobile station shall send a *Mobile Station Reject Order* with ORDQ equal to '00010100' (UAK not supported).
    - Set RESTORE_KEY to '0'.
    - Send a *Security Mode Completion Order*.
    - Disable the key setup timer if it is running.
  - Set $INTEGRITY\_MODE_s$ to the SDU_INTEGRITY_ALGO delivered by the LAC Layer.

- If $ENC\_KEY\_SIZE_r$ is included and not set to reserved value and if current key strength is greater than the desired key strength specified by $ENC\_KEY\_SIZE_r$ according to table 3.7.4.5-2, mobile station shall perform the key strength reduction algorithm procedures to reduce the key strength of ENC_KEY[KEY_ID] according to $ENC\_KEY\_SIZE_r$ as described in 2.3.12.5.4. The current key strength is 64 bit if KEY_ID is equal to '00' or '01' and is 128 bit if KEY_ID is equal to '10' or '11'.

2.6.11.3 General Handoff Direction Message and Universal Handoff Direction Message

The mobile station shall perform the following procedures in the order listed below at the action time of the message.

- If $D\_SIG\_ENCRYPT\_MODE_r$ is included, the mobile station shall set $D\_SIG\_ENCRYPT\_MODE_s$ to $D\_SIG\_ENCRYPT\_MODE_r$.
- If $ENC\_KEY\_SIZE_r$ is included, the mobile station shall set $ENC\_KEY\_SIZE_s$ to $ENC\_KEY\_SIZE_r$.
- If $REGISTER\_IN\_IDLE_r$ is included, the mobile station shall set $REGISTER\_IN\_IDLE_s$ to $REGISTER\_IN\_IDLE_r$.
- If $MSG\_INTEGRITY\_SUP_r$ is included, the mobile station shall set $MSG\_INTEGRITY\_SUP_s$ to $MSG\_INTEGRITY\_SUP_r$.
- If $GEN\_2G\_KEY_r$ is included and is set to '1', the mobile station shall perform the following in the order listed below:
  - Perform the CDMA_3G_2G_Conversion procedure as defined in [44] for 3G to 2G one-way roaming to generate a new CMEAKEY from CK.
  - Set TX_EXT_SSEQ[0]['00'] to TX_EXT_SSEQ[0][KEY_ID], TX_EXT_SSEQ[1]['00'] to TX_EXT_SSEQ[1][KEY_ID], RX_EXT_SSEQ[0]['00'] to RX_EXT_SSEQ[0][KEY_ID], and RX_EXT_SSEQ[1]['00'] to RX_EXT_SSEQ[1][KEY_ID].
  - Form a 128-bit pattern by concatenating the resultant CMEAKEY with a copy of itself.
  - Store the 128-bit pattern in ENC_KEY['00'] and INT_KEY['00'].
  - Set KEY_ID and $LAST\_2G\_KEY\_ID_s$ to '00'.
- If $ENC\_KEY\_SIZE_r$ is included and not set to reserved value and if current key strength is greater than the desired key strength specified by $ENC\_KEY\_SIZE_r$ according to table 3.7.4.5-2, mobile station shall perform the key strength reduction algorithm procedures to reduce the key strength of ENC_KEY[KEY_ID] according to $ENC\_KEY\_SIZE_r$ as described in 2.3.12.5.4. The current key strength is 64 bit if KEY_ID is equal to '00' or '01' and is 128 bit if KEY_ID is equal to '10' or '11'.

2.6.11.4 Security Mode Command Message on f-csch

The mobile station shall perform the following procedures in the order listed below.

- Set $C\_SIG\_ENCRYPT\_MODE_s$ to $C\_SIG\_ENCRYPT\_MODE_r$.
- If $ENC\_KEY\_SIZE_r$ is included, the mobile station shall set $ENC\_KEY\_SIZE_s$ to $ENC\_KEY\_SIZE_r$.
- If $MSG\_INTEGRITY\_SUP_s$ is equal to '0', $C\_SIG\_ENCRYPT\_MODE_r$ is not equal to '000' and the mobile sent a *Security Mode Request Message* with the NEW_SSEQ_H_INCL field equal to '1' prior to receiving this message when $C\_SIG\_ENCRYPT\_MODE_s$ was not equal to '000', the mobile station shall perform the following:
  - Set TX_EXT_SSEQ[0][KEY_ID], TX_EXT_SSEQ[1][KEY_ID], RX_EXT_SSEQ[0][KEY_ID], and RX_EXT_SSEQ[1][KEY_ID] to 1 + 256 × NEW_SSEQ_H included in the *Security Mode Request Message*.
- If $MSG\_INTEGRITY\_SUP_s$ is equal to '1' and $MSG\_INTEGRITY\_INFO_r$ is equal to '1', the mobile station shall perform the following:
  - If $CHANGE\_KEYS_r$ is equal to '0', the mobile station shall set RESTORE_KEY to '0'.
  - If $CHANGE\_KEYS_r$ is equal to '1', the mobile station shall perform the following:
    - Set KEY_ID to SDU_KEY_ID provided by the LAC Layer (see [4]).
    - If KEY_ID is equal to '00' or '01', the mobile station shall perform the following:
      - Set TX_EXT_SSEQ[0][KEY_ID], TX_EXT_SSEQ[1][KEY_ID], RX_EXT_SSEQ[0][KEY_ID], and RX_EXT_SSEQ[1][KEY_ID] to 1 + 256 × NEW_SSEQ_H included in the *Security Mode Request Message*.
      - Form a 128-bit pattern by concatenating the CMEAKEY with a copy of itself (the most recently generated CMEAKEY associated with the AUTHR of the *Registration Message*, *Origination Message*, *Page Response Message* or the CMEAKEY associated with the AUTHU generated during Unique Challenge-Response procedure as described in 2.3.12.1.4).
      - Set ENC_KEY[KEY_ID] to the 128-bit pattern.
      - Set INT_KEY[KEY_ID] to the 128-bit pattern.
      - Set $LAST\_2G\_KEY\_ID_s$ to KEY_ID.
    - If KEY_ID is equal to '10' or '11', the mobile station shall perform the following:
      - Set TX_EXT_SSEQ[0][KEY_ID], TX_EXT_SSEQ[1][KEY_ID], RX_EXT_SSEQ[0][KEY_ID], and RX_EXT_SSEQ[1][KEY_ID] to 1 + 256 × NEW_SSEQ_H included in the *Authentication Response Message*, or *Security Mode Request Message*.

- o Set ENC_KEY[KEY_ID] to the CK generated by AKA.
- o Set INT_KEY[KEY_ID] to the IK generated by AKA.
- o Set $LAST\_3G\_KEY\_ID_S$ to KEY_ID.
- o If the mobile station supports R-UIM, then the mobile station shall set USE_UAK_S to USE_UAK_r; otherwise, the mobile station shall perform the following:
  - ◊ Set USE_UAK_S to '0'.
  - ◊ If USE_UAK_r is equal to '1', then the mobile station shall send a *Mobile Station Reject Order* with ORDQ equal to '00010100' (UAK not supported).

+ Set RESTORE_KEY to '0'.
+ Perform the key strength reduction algorithm procedures to reduce the key strength of ENC_KEY[KEY_ID] according to $ENC\_KEY\_SIZE_r$ as described in 2.3.12.5.3.
+ Send a *Security Mode Completion Order*.
+ Disable the key setup timer if it is running.

– Set $INTEGRITY\_MODE_S$ to the SDU_INTEGRITY_ALGO delivered by the LAC Layer.

- If $ENC\_KEY\_SIZE_r$ is included and not set to reserved value and if current key strength is greater than the desired key strength specified by $ENC\_KEY\_SIZE_r$ according to table 3.7.4.5-2, mobile station shall perform the key strength reduction algorithm procedures to reduce the key strength of ENC_KEY[KEY_ID] according to $ENC\_KEY\_SIZE_r$ as described in 2.3.12.5.4. The current key strength is 64 bit if KEY_ID is equal to '00' or '01' and is 128 bit if KEY_ID is equal to '10' or '11'.

2.6.11.5 Base Station Reject Order on f-csch and f-dsch.

The mobile station shall perform the following procedures in the order listed below.

- If $ORDQ_r$ is equal to '00000000' or if $ORDQ_r$ is equal to '00000010', $REJECT\_REASON_r$ = '0011', and $REJECTED\_L3\_MSG\_TYPE_r$ indicates the rejected message is an *Origination Message*, the mobile station shall set ENC_KEY[i] and INT_KEY[i] to NULL, where i ranges from '00' to '11'. The mobile station shall set $C\_SIG\_ENCRYPT\_MODE_S$ to '000'. The mobile station shall re-originate by sending a new *Origination Message*.

- If $ORDQ_r$ is equal to '00000001' or if $ORDQ_r$ is equal to '00000010' and $REJECTED\_L3\_MSG\_TYPE_r$ indicates the rejected message is not an *Origination Message*, the mobile station shall send a *Security Mode Request Message*. If $MSG\_INTEGRITY\_SUP_S$ is equal to '0', the mobile station shall select a 24-bit number and include this number in the NEW_SSEQ_H field in the *Security Mode Request Message*; otherwise, the mobile station shall select a 24-bit number and deliver this number to the LAC Layer along with the *Security Mode Request Message*. If the mobile receives two *Base Station Reject Order*s without successfully decrypting any encrypted message or without successfully validating the MACI of any message between the two orders, the mobile station shall set REG_SECURITY_RESYNC to YES and enter the *System Determination Substate* with an encryption/message integrity failure indication.

2.6.11.6 Mobile Station processing when decryption or MACI check failed

Whenever the mobile station cannot decrypt an encrypted message or validate the MACI of a message that requires MACI validation, the mobile station may send an un-encrypted *Mobile Station Reject Order* indicating the failure condition to the base station.

If the failure to decrypt or to validate MACI persists, the mobile station may attempt to resynchronize the crypto-sync with the base station by sending a *Security Mode Request Message* to the base station as follows:

- If $MSG\_INTEGRITY\_SUP_S$ is equal to '0', the mobile station shall select a 24-bit number and include this number in the NEW_SSEQ_H[44] field in the *Security Mode Request Message*; otherwise, the mobile station shall select a 24-bit number and deliver this number to the LAC Layer along with the *Security Mode Request Message*.

The mobile station shall set REG_SECURITY_RESYNC to YES and enter the *System Determination Substate* with an encryption/message integrity failure indication if either of the following conditions are true:

- The mobile station chooses not to perform resynchronization procedure as described above.
- The mobile station still cannot decrypt message or validate the MACI of message from the base station after successfully receiving and processing *Security Mode Command Message* in response to *Security Mode Request Message* sent by mobile station in resynchronization procedure as specified in 2.6.11.4 or 2.6.4.1.14.

2.6.12 Common Procedures for Processing f-csch Messages

This section describes the common procedures for processing messages received on the f-

[44] The mobile station should select a different value of NEW_SSEQ_H every time NEW_SSEQ_H is included in a message. This is to prevent the re-use of the same 24 most significant bits of the 32-bit crypto-sync.

csch.

2.6.12.1 Fast Call Setup Order

The mobile station shall perform the following procedures in the order listed below:

- If $RER\_MODE\_ENABLED_r$ is included and equal to '1', and the mobile station supports operation in the radio environment reporting mode, the mobile station shall set RER_MODE_ENABLED to YES, RER_COUNT to 0, and shall perform the following:
  - The mobile station shall disable the radio environment report timer, if enabled.
  - The mobile station shall store the following:
    - Maximum number of *Radio Environment Messages* that the mobile station is permitted to transmit while in radio environment reporting mode ($RER\_MAX\_NUM\_MSG_s$ = *infinity*, if $RER\_MAX\_NUM\_MSG\_IDX_r$ is equal to '111'; otherwise, $RER\_MAX\_NUM\_MSG_s = 2^{RER\_MAX\_NUM\_MSG\_IDX_r}$).
    - Maximum number of pilots to maintain in RER_PILOT_LIST ($MAX\_RER\_PILOT\_LIST\_SIZE_s = MAX\_RER\_PILOT\_LIST\_SIZE_r$).
    - System identification for radio environment reporting mode ($RER\_SID_s = SID_s$).
    - Network identification for radio environment reporting mode ($RER\_NID_s = NID_s$).
  - The initial radio environment report pilot list (RER_PILOT_LIST) is generated as follows:
    - If $ORDQ_r$ is equal to '00000001' and the size of the current RER_PILOT_LIST is greater than $MAX\_RER\_PILOT\_LIST\_SIZE_s$, the mobile station shall remove all but the first $MAX\_RER\_PILOT\_LIST\_SIZE_s$ pilots from RER_PILOT_LIST.
    - Otherwise, the initial RER_PILOT_LIST is generated according to the procedures specified in [4].
  - The mobile station shall enable the radio environment report timer with an initial value of *infinity* if RER_TIME_r is equal to '111'; otherwise, the mobile station shall enable the radio environment report timer with an initial value of $2^{RER\_TIME_r}$ seconds if $RER\_TIME\_UNIT_r$ is equal to '00', or $2^{RER\_TIME_r}$ minutes if $RER\_TIME\_UNIT_r$ is equal to '01', or $2^{RER\_TIME_r}$ hours if $RER\_TIME\_UNIT_r$ is equal to '10'.
- If $RER\_MODE\_ENABLED_r$ is included and equal to '0', and RER_MODE_ENABLED is equal to YES, the mobile station shall perform the following:
  - The mobile station shall disable the radio environment report timer and set RER_MODE_ENABLED to NO.
  - If TKZ_MODE_PENDING is equal to YES, then the mobile station shall set

TKZ_MODE_PENDING to NO.

- If $TKZ\_MODE\_ENABLED_r$ is included and equal to '1', and the mobile station supports tracking zone reporting, the mobile station shall set TKZ_COUNT to 0 and perform the following:
  - The mobile station shall disable the tracking zone update timer, if enabled.
  - The mobile station shall store the following:
    - Tracking zone list length ($TKZ\_LIST\_LEN_s = TKZ\_LIST\_LEN_r$).
    - Tracking zone timer ($TKZ\_TIMER_s = TKZ\_TIMER_r$).
    - Maximum number of *Radio Environment Messages* that the mobile station is permitted to transmit while in tracking zone mode ($TKZ\_MAX\_NUM\_MSG_s$ = *infinity*, if $TKZ\_MAX\_NUM\_MSG\_IDX_r$ is equal to '111'; otherwise, $TKZ\_MAX\_NUM\_MSG_s = 2^{TKZ\_MAX\_NUM\_MSG\_IDX_r}$).
    - System identification for tracking zone mode ($TKZ\_SID_s = SID_s$).
    - Network identification for tracking zone mode ($TKZ\_NID_s = NID_s$).
    - Tracking zone update period ($TKZ\_UPDATE\_PRD_s = TKZ\_UPDATE\_PRD_r$).
  - If RER_MODE_ENABLED is equal to NO, the mobile station shall set TKZ_MODE_ENABLED to YES; otherwise, the mobile station shall set TKZ_MODE_PENDING to YES.
  - If TKZ_MODE_ENABLED is equal to YES, the mobile station shall perform the following:
    - Initialize the tracking zone list (TKZ_LIST) to contain TKZ_ID_s.
    - Enable the tracking zone update timer with an initial value of infinity if $TKZ\_UPDATE\_PRD_s$ is equal to '1111'; otherwise, the mobile station shall enable the tracking zone update timer with an initial value of $2^{TKZ\_UPDATE\_PRD_s + 6}$ seconds.
- If $TKZ\_MODE\_ENABLED_r$ is included and equal to '0', and TKZ_MODE_ENABLED is equal to YES, the mobile station shall perform the following:
  - The mobile station shall disable the tracking zone update timer and set TKZ_MODE_ENABLED to NO.

If $ORDQ_r$ is equal to '00000000' (base station request for mobile station to operate in a fast call setup mode), the mobile station shall respond with a *Fast Call Setup Order* (ORDQ = '00000001') as follows:

- If $RSC\_MODE\_SUPPORTED_r$ is equal to '1' and the mobile station accepts operation in the reduced slot cycle mode, the mobile station shall set the RSC_MODE_IND field to '1' and perform the following:
  - Set RSC_MODE_ENABLED to YES.
  - Set the RSC_END_TIME_UNIT and RSC_END_TIME_VALUE fields as specified in 2.7.3.6, and store the system time specified by these fields as

RSC_END_TIME. The value of RSC_END_TIME shall be no later than the system time specified by $MAX\_RSC\_END\_TIME\_UNIT_r$ and $MAX\_RSC\_END\_TIME\_VALUE_r$.

– Set the RSCI field as specified in 2.7.3.6 and store it as $RSCI_s$; if $RSCI_s$ is equal to '0111', set $SLOTTED_s$ to NO.

– Set $IGNORE\_QPCH_s$ to $IGNORE\_QPCH_r$.

- Otherwise, the mobile station shall set the RSC_MODE_IND field to '0'.

If $ORDQ_r$ is equal to '00000001' (base station response to mobile station's request to operate in a fast call setup mode), the mobile station shall perform the following:

- If $RSC\_MODE\_SUPPORTED_r$ is equal to '1', the mobile station shall perform the following:– Set RSC_END_TIME to the earlier of the current value of RSC_END_TIME, and the system time specified by $MAX\_RSC\_END\_TIME\_UNIT_r$ and $MAX\_RSC\_END\_TIME\_VALUE_r$.

  – Set $IGNORE\_QPCH_s$ to $IGNORE\_QPCH_r$.

- If $RSC\_MODE\_SUPPORTED_r$ is equal to '0', the mobile station shall set RSC_MODE_ENABLED to NO and set $SLOTTED_s$ to YES.

2.6.13 Mobile Station BCMC Operation

This section specifies the mobile station requirements for monitoring BCMC flows. If the mobile station supports BCMC, the requirements in this section apply in addition to all other requirements in the Mobile Station Idle State, System Access State, and Mobile Station Control on the Traffic Channel State.

The operations performed by a mobile station that supports BCMC are as follows:

- Procedures for commencing reception of a BCMC flow while in Mobile Station Idle State or System Access State (see 2.6.13.1)
- Procedures while monitoring a Forward Supplemental Channel in *Mobile Station Idle State* or *System Access State* (see 2.6.13.2)
- Procedures for BCMC registration while in Mobile Station Idle State or System Access State (see 2.6.13.3)
- Procedures for Idle Handoff while Monitoring Forward Supplemental Channelwhile in Mobile Station Idle State or System Access State (see 2.6.13.4)
- Procedures for stopping reception of a BCMC flow while in Mobile Station Idle State or System Access State (see 2.6.13.5)
- Procedures for processing *BCMC Service Parameters Message* Updates while in Mobile Station Idle State or System Access State (see 2.6.13.6)
- Procedures for Browsing BCMC flows while in Mobile Station Idle State or System Access State (see 2.6.13.7)

- Procedures for BCMC Operation while in Mobile Station Control on the Traffic Channel State (see 2.6.13.8)
- Procedures for computation of Authorization Signature (see 2.6.13.9)
- Procedures for generating public long code mask for F-SCH *Mobile Station Idle State* or *System Access State* (see 2.6.13.10)

The following primitives can be received by Layer 3 from the BCMC Service Layer:

- *BCMC-Monitor.Request(BCMC_FLOW_ID*[45]*, priority)* - to request Layer 3 to commence monitoring the specified BCMC flow, where
  - *BCMC_FLOW_ID* identifies the BCMC flow to monitor.
  - *priority* is to be used when current BCMC flow(s) and the new BCMC flow cannot both be accommodated.
- *BCMC-Browse.Request* - to request Layer 3 to report all BCMC flows currently available.
- *BCMC-Stop-Monitor.Request(BCMC_FLOW_ID)* - to request Layer 3 to stop monitoring the specified BCMC flow, where
  - *BCMC_FLOW_ID* identifies the BCMC flow to stop monitoring.

The following primitives can be sent by Layer 3 to the BCMC Service Layer:

- *BCMC-Monitor.Response(BCMC_FLOW_ID, result, cause, reason_ind)* – response to the BCMC Service Layer for a request to monitor a BCMC flow or due to mobility, where
  - *BCMC_FLOW_ID* identifies the requested BCMC flow.
  - *result* indicates the result of the request and can be one of following:
    - SUCCESS indicates the request was successful
    - FAILURE indicates the request was unsuccessful
  - *cause* indicates the reason for failure when the request was unsuccessful and can be one of the following
    - FLOW_NOT_AVAILABLE which indicates the requested BCMC flow is not available in this base station
    - CANNOT_ACCOMMODATE which indicates the requested BCMC flow cannot be monitored due to monitoring other higher priority BCMC flow(s)
    - UNSUPPORTED_BEARER_CONFIG which indicates that the requested

[45] Although the primitive is modeled to allow the Upper Layer to request for a single BCMC_FLOW_ID at a time, this procedure can be implemented such that multiple BCMC_FLOW_IDs can be requested simultaneously.

BCMC flow cannot be monitored due to a physical channel capability mismatch

+ FLOW_NOT_TRANSMITTED which indicates that the requested BCMC flow is not being transmitted by this base station although it is configured for transmission.

+ FLOW_TRANSMITTED_IN_IDLE which indicates that the requested BCMC flow is being transmitted by this base station in idle state.

+ CALL_RELEASED which indicates that the call was released.

– *reason_ind* is included when the request is unsuccessful and can be one of the following

+ CURRENT_SYS to indicate it occurred in current system

+ MOBILITY to indicate it occurred due to idle handoff

- *BCMC-Browse.Response(result, {BCMC_FLOW_IDs})* - response to the BCMC Service Layer for a request to browse for BCMC flows, where

– *result* indicates the result of the request and can be one of following:

+ SUCCESS indicates current sector is configured to transmit one or more BCMC flows and this list of BCMC flows is passed as {BCMC_FLOW_IDs}

+ FAILURE indicates current sector is not configured to transmit any BCMC flows.

The following primitives are sent by Layer 3 to Multiplex sublayer:

- *BMAC-Start-Deliver.Request(FSCH_ID, BSR_ID)* - to request the Multiplex sublayer to start delivering the data blocks corresponding to the specified BCMC flow, where

– *FSCH_ID* identifies the physical channel on which this BCMC flow is being carried

– *BSR_ID* identifies the BCMC Service Reference Identifier being used by this BCMC flow on this physical channel

- *BMAC-Stop-Deliver.Request(FSCH_ID, BSR_ID)* - to request the Multiplex sublayer to stop delivering the data blocks corresponding to the specified BCMC flow, where

– *FSCH_ID* identifies the physical channel on which this BCMC flow is being carried

– *BSR_ID* identifies the BCMC Service Reference Identifier being used by this BCMC flow on this physical channel

If the mobile station is currently not monitoring a BCMC flow, the mobile station shall perform the following:

- If Layer 3 receives a *BCMC-Monitor.Request(BCMC_FLOW_ID, priority)* from the BCMC Service Layer, Layer 3 shall perform the procedures specified in 2.6.13.1 to commence reception of the BCMC flow.

- If Layer 3 receives a *BCMC-Browse.Request* from the BCMC Service Layer, Layer 3 shall perform the procedures specified in 2.6.13.7 to determine which BCMC flows are currently available.

2.6.13.1 Procedures for commencing reception of a BCMC Flow

If Layer 3 is requested by the BCMC Service Layer to commence reception of a BCMC flow (see 2.6.13), the mobile station shall perform the following procedures in the order specified:

- If SENDING_BSPM$_S$ equals ‘0’, Layer 3 shall send a *BCMC-Monitor.Response(BCMC_FLOW_ID, result = FAILURE, cause = FLOW_NOT_AVAILABLE, reason_ind = CURRENT_SYS)* to the BCMC Service Layer and shall not perform the remaining procedures in this section.
- If the stored *BCMC Service Parameters Message* parameters do not include this BCMC_FLOW_ID (See section 2.6.13.11) and FULL_BSPM_IND = ‘0’, the mobile station shall monitor the overhead channel to receive the *BCMC Service Parameters Message* as specified in 2.6.2.2.18 until its stored *BCMC Service Parameters Message* parameters include this BCMC_FLOW_ID, or until FULL_BSPM_IND = ‘1’
- The mobile station shall perform the following:
  - If FLOW_INFO_ON_OTHER_FREQ equals ‘1’, the mobile station shall perform the following:
    - If FREQ_CHG_REG_REQUIRED$_S$ equals ‘1’, the mobile station shall perform BCMC registration procedures as specified in 2.6.13.3 to indicate change in the frequency where the mobile station will reside to receive the *BCMC Service Parameters Message*.
    - The mobile station shall tune to the frequency specified by BSPM_CDMA_FREQ and BSPM_BAND_CLASS; the mobile station should tune to the new frequency only after performing BCMC registration specified above (if any). If FREQ_CHG_REG_TIMER$_S$ is not equal to NULL and the BCMC frequency registration timer for the previous frequency is not enabled or has expired, the mobile station shall start the BCMC frequency registration timer for the previous frequency with a value of FREQ_CHG_REG_TIMER$_S$.
    - The mobile station shall monitor the overhead channel to receive the *BCMC Service Parameters Message* as specified in 2.6.2.2.18, and shall perform the following:
      - If SENDING_BSPM$_S$ equals ‘0’, Layer 3 shall send a *BCMC-Monitor.Response(BCMC_FLOW_ID, result = FAILURE, cause = FLOW_NOT_AVAILABLE, reason_ind = CURRENT_SYS)* to the BCMC Service Layer and shall not perform the remaining procedures in this section.

- Otherwise, the mobile station shall perform the remaining procedures in this section.

– If the stored *BCMC Service Parameters Message* parameters do not include this BCMC_FLOW_ID (See section 2.6.13.11) and AUTO_REQ_ALLOWED_IND$_S$ equals ‘0’, Layer 3 shall send a *BCMC-Monitor.Response(BCMC_FLOW_ID, result = FAILURE, cause = FLOW_NOT_AVAILABLE, reason_ind = CURRENT_SYS)* to the BCMC Service Layer and shall not perform the remaining procedures in this section.

– If the *BCMC Service Parameters Message* includes the BCMC flow indicated by BCMC_FLOW_ID, BCMC_FLOW_ON_IND corresponding to this BCMC flow equals ‘1’, and BCMC_FLOW_ON_TRAFFIC_IND corresponding to this BCMC flow equals ‘1’, the mobile station shall either perform Mobile Station Origination Operation as specified in 2.6.2.5 to request this flow in the *Mobile Station Control on the Traffic Channel State* or monitor the flow in the *Mobile Station Idle State* as specified in 2.6.13.2.

– If the stored *BCMC Service Parameters Message* does not include this BCMC_FLOW_ID (See section 2.6.13.11), AUTO_REQ_ALLOWED_IND$_S$ equals ‘1’ and BCMC_ON_TRAFFIC_SUP$_S$ equals ‘1’; or the *BCMC Service Parameters Message* includes the BCMC flow indicated by BCMC_FLOW_ID, BCMC_FLOW_ON_IND corresponding to this BCMC flow equals ‘0’, and BCMC_FLOW_ON_TRAFFIC_IND corresponding to this BCMC flow equals ‘1’, the mobile station shall perform the following:

  + The mobile station shall perform Mobile Station Origination Operation as specified in 2.6.2.5 to request transmission of this BCMC flow. The mobile station shall include the BCMC_FLOW_ID (See section 2.6.13.11) in the *Origination Message*.

– If the stored *BCMC Service Parameters Message* parameters do not include this BCMC_FLOW_ID (See section 2.6.13.11), AUTO_REQ_ALLOWED_IND$_S$ equals ‘1’, and BCMC_ON_TRAFFIC_SUP$_S$ equals ‘0’; or the stored *BCMC Service Parameters Message* parameters include the BCMC flow indicated by BCMC_FLOW_ID, BCMC_FLOW_ON_IND corresponding to this BCMC flow equals ‘0’, and BCMC_FLOW_ON_TRAFFIC_IND corresponding to this BCMC flow equals ‘0’, the mobile station shall perform the following:

  + The mobile station shall send a *Registration Message* to request transmission of this BCMC flow. Upon receiving conformation of delivery of the *Registration Message*, the mobile station shall enable the BCMC wait timer with a value of BSPM_WAIT_TIME seconds and shall wait for an updated *BCMC Service Parameters Message*.

  + If the BCMC wait timer expires, Layer 3 shall send a *BCMC-Monitor.Response(BCMC_FLOW_ID, result = FAILURE, cause = FLOW_NOT_TRANSMITTED, reason_ind = CURRENT_SYS)* to the BCMC Service Layer, and shall not perform the remaining procedures in this section.

+ If the mobile station receives a *BCMC Order* from the base station prior to the expiration of the BCMC wait timer, the mobile station shall perform the following:

  - If $CLEAR\_ALL\_RETRY\_DELAY_r$ equals '1', the mobile station shall delete the currently stored BCMC Retry Delay List.
  - If $CLEAR\_RETRY\_DELAY_r$ equals '1', the mobile station shall delete the entry in the $BCMC\_RETRY\_DELAY\_LIST_s[i]$ corresponding to BCMC_FLOW_ID (See section 2.6.13.11) in this message.
  - If $ALL\_BCMC\_REASON_r$ or $BCMC\_REASON_r$ equals '0000', Layer 3 shall send a *BCMC-Monitor.Response(BCMC_FLOW_ID, result = FAILURE, cause = FLOW_NOT_AVAILABLE, reason_ind = CURRENT_SYS)* for each of the corresponding BCMC_FLOW_ID to the BCMC Service Layer, and shall not perform the remaining procedures in this section for the corresponding BCMC_FLOW_ID.
  - If $ALL\_BCMC\_REASON_r$ or $BCMC\_REASON_r$ equals '0001', Layer 3 shall send a *BCMC-Monitor.Response(BCMC_FLOW_ID, result = FAILURE, cause = FLOW_NOT_TRANSMITTED, reason_ind = CURRENT_SYS)* for each of the corresponding BCMC_FLOW_ID to the BCMC Service Layer, and shall not perform the remaining procedures in this section for the corresponding BCMC_FLOW_ID.
  - If $ALL\_BCMC\_REASON_r$ or $BCMC\_REASON_r$ equals '0011', Layer 3 shall send a *BCMC-Monitor.Response(BCMC_FLOW_ID, result = SUCCESS, reason_ind = REGISTRATION_ACCEPTED*) for each of the corresponding BCMC_FLOW_ID to the BCMC Service Layer and shall not perform the remaining procedures in this section for the corresponding BCMC_FLOW_ID.
  - If $ALL\_BCMC\_REASON_r$ or BCMC_REASON equals '0100', Layer 3 shall send a *BCMC-Monitor.Response(BCMC_FLOW_ID, result = FAILURE, cause = AUTHORIZATION_FAILURE, reason_ind = CURRENT_SYS)* for each of the corresponding BCMC_FLOW_ID to the BCMC Service Layer, and shall not perform the remaining procedures in this section for the corresponding BCMC_FLOW_ID.
  - If $ALL\_BCMC\_REASON_r$ or BCMC_REASON equals '0101', the mobile station shall perform the following:
    - Layer 3 shall send a *BCMC-Monitor.Response(BCMC_FLOW_ID, result = FAILURE, cause = RETRY_LATER, reason_ind = CURRENT_SYS)* for each of the corresponding BCMC_FLOW_ID to the BCMC Service Layer.
    - For each of the corresponding BCMC_FLOW_ID, if there is a $BCMC\_RETRY\_DELAY\_LIST_s[i]$.BCMC_FLOW_ID which is same as BCMC_FLOW_ID (See section 2.6.13.11), the mobile station shall set $BCMC\_RETRY\_DELAY\_LIST_s[i]$.RETRY_DELAY to current system

time plus $ALL\_BCMC\_RETRY\_DELAY_r$/$BCMC\_RETRY\_DELAY_r$; otherwise, Layer 3 shall add new $BCMC\_RETRY\_DELAY\_LIST_s[i]$ to the BCMC Retry Delay List and shall set $BCMC\_RETRY\_DELAY\_LIST_s[i]$.BCMC_FLOW_ID to BCMC_FLOW_ID, $BCMC\_RETRY\_DELAY\_LIST_s[i]$.RETRY_DELAY to current system time plus $ALL\_BCMC\_RETRY\_DELAY_r$/$BCMC\_RETRY\_DELAY_r$.

- The mobile station shall not perform the remaining procedures in this section for the corresponding BCMC_FLOW_ID.

o If the BCMC flow corresponding to this BCMC_FLOW_ID (See section 2.6.13.11) is included in the stored *BCMC Service Parameters Message* parameters and BCMC_FLOW_ON_IND corresponding to this BCMC flow changes to '1' prior to the expiration of the BCMC wait timer, the mobile station shall disable the BCMC wait timer and perform the remaining procedures in this section.

- The mobile station shall determine the Forward Supplemental Channel corresponding to this BCMC_FLOW_ID from $BCMC\_FLOW\_LIST_s$. If the BCMC flow corresponding to this BCMC_FLOW_ID is configured for transmission in the mobile station's hash-to-frequency, the mobile station shall choose the mobile station's hash-to-frequency; otherwise, the mobile station shall use the hash algorithm specified in 2.6.7.1 and the number of CDMA channels on which this BCMC_FLOW_ID is configured for transmission to choose the frequency to monitor. The mobile station shall perform the following:

  – The mobile station shall determine the Band Class (FSCH_BAND_CLASS) and the CDMA channel (FSCH_FREQ) corresponding to the selected Forward Supplemental Channel from $FBSCH\_LIST_s$. If FSCH_BAND_CLASS is not equal to $CDMA\_BAND_s$ or FSCH_FREQ is not equal to $CDMACH_s$ and the mobile station is currently monitoring one or more BCMC flows in the current frequency that have a higher priority than the requested BCMC flow, Layer 3 shall send a *BCMC-Monitor.Response(BCMC_FLOW_ID, result = FAILURE, cause= CANNOT_ACCOMMODATE, reason_ind = CURRENT_SYS)* to the BCMC Service Layer, and shall not perform the remaining procedures in this section.

  – If the mobile station will not be able to monitor the Forward Supplemental Channel on which the BCMC flow is being transmitted due to a capability mismatch, Layer 3 shall send a *BCMC-Monitor.Response(BCMC_FLOW_ID, result = FAILURE, cause = UNSUPPORTED_BEARER_CONFIG, reason_ind = CURRENT_SYS)* to the BCMC Service Layer, and shall not perform the remaining procedures in this section.

- If FSCH_BAND_CLASS is not equal to $CDMA\_BAND_s$ or FSCH_FREQ is not equal to $CDMACH_s$, the mobile station shall perform the following:

  – If $FREQ\_CHG\_REG\_REQUIRED_s$ equals '1', the mobile station shall perform BCMC registration procedures as specified in 2.6.13.3 to indicate change in the frequency where the mobile station will reside while monitoring this BCMC flow.

- The mobile station shall tune to FSCH_FREQ in FSCH_BAND_CLASS; the mobile station should tune to the new frequency only after performing BCMC registration specified above (if any). If $FREQ\_CHG\_REG\_TIMER_S$ is not equal to NULL and the BCMC frequency registration timer for the previous frequency is not enabled or has expired, the mobile station shall start the BCMC frequency registration timer for the previous frequency with a value of $FREQ\_CHG\_REG\_TIMER_S$.
- For each BCMC flow in current frequency that can no longer be monitored in new frequency, the mobile station shall perform the following:
  - Layer 3 shall send a *BCMC-Monitor.Response(BCMC_FLOW_ID, result = FAILURE, cause = CANNOT_ACCOMMODATE, reason_ind = CURRENT_SYS)* to the BCMC Service Layer.
  - Layer 3 shall send a *BMAC-Stop-Deliver.Request(FSCH_ID, BSR_ID)* to the multiplex sublayer where *FSCH_ID* and *BSR_ID* are the values in $BCMC\_FLOW\_LIST_S$ corresponding to this BCMC_FLOW_ID.

- The mobile station shall set the Forward Supplemental Channel parameters as given in $FBSCH\_LIST_S$ and shall start to monitor the Forward Supplemental Channel.
- The mobile station shall send a *BMAC-Start-Deliver.Request(FSCH_ID, BSR_ID)* to the multiplex sublayer where FSCH_ID and BSR_ID are the values in $BCMC\_FLOW\_LIST_S$ corresponding to the logical-to-physical mapping selected for this BCMC_FLOW_ID.
- The mobile station shall send a *BCMC-Monitor.Response(BCMC_FLOW_ID, result=SUCCESS)* to the BCMC Service Layer.
- The mobile station shall perform the procedures as specified in 2.6.13.2 while monitoring the Forward Supplemental Channel

2.6.13.2 Procedures while monitoring an Forward Supplemental Channel

While monitoring a Forward Supplemental Channel, the mobile station shall perform the following:

- The mobile station shall determine the hash-to frequency based on received CDMA Channel List Message or the Extended CDMA Channel List Message but shall not tune to the hash-to frequency. If $FREQ\_CHG\_REG\_REQUIRED_S$ equals '1' and the mobile station determines that the hash-to frequency has changed and the mobile station currently resides in the previous hash-to frequency, the mobile station shall perform BCMC registration procedures as specified in 2.6.13.3 to indicate current frequency.
- If the mobile station performs an idle handoff (see 2.6.2.1.4), the mobile station shall perform the procedures as specified in 2.6.13.4. If the idle handoff results in the mobile station residing in a frequency other than the frequency prior to the idle handoff, the mobile station shall perform the following:

- If $FREQ\_CHG\_REG\_REQUIRED_S$ equals '1', the mobile station shall perform BCMC registration procedures as specified in 2.6.13.3 to indicate change in the frequency where the mobile station will reside while monitoring this BCMC flow. If $FREQ\_CHG\_REG\_TIMER_S$ is not equal to NULL and the BCMC frequency registration timer for the previous frequency is not enabled or is enabled and has not expired, the mobile station shall start the BCMC frequency registration timer for the previous frequency with a value of $FREQ\_CHG\_REG\_TIMER_S$.

- If the $BCMC\_FLOW\_LIST_S$[i].REGISTRATION_REQ_FLAG is equal to '1' for any BCMC flow being monitored by the mobile station, then the mobile station shall perform BCMC registration procedures as specified in 2.6.13.3 if any of the following conditions are true:
  - The mobile station determines that $BCMC\_FLOW\_LIST_S$[i].REGISTRATION_REQ_FLAG was set to '0' since the last time the mobile station initiated registration procedures due to $BCMC\_FLOW\_LIST_S$[i].REGISTRATION_REQ_FLAG.
  - The mobile station cannot determine that $BCMC\_FLOW\_LIST_S$[i].REGISTRATION_REQ_FLAG was not set to '0' since the last time the mobile station initiated registration procedures due to $BCMC\_FLOW\_LIST_S$[i].REGISTRATION_REQ_FLAG.

- If Layer 3 receives a *BCMC-Stop-Monitor.Request(BCMC_FLOW_ID)* from the BCMC Service Layer, Layer 3 shall stop monitoring this BCMC flow as specified in 2.6.13.5.

- If Layer 3 receives a *BCMC-Monitor.Request(BCMC_FLOW_ID, priority)* from the BCMC Service Layer, Layer 3 shall perform the procedures specified in 2.6.13.1 to commence reception of the BCMC flow.

- If the mobile station determines that the content of the *BCMC Service Parameters Message* has changed, Layer 3 shall perform the procedures as specified in 2.6.13.6.

- If the BCMC frequency registration timer for the frequency where the mobile station is currently residing expires, the mobile station shall perform BCMC registration procedures as specified in 2.6.13.3 to indicate current frequency.

2.6.13.3 Procedures for BCMC Registration

If the mobile station is to perform BCMC registration due to the REGISTRATION_REQ_FLAG indicator being set, the mobile station shall perform the following:

- If this is the first time $BCMC\_FLOW\_LIST_S$[i].REGISTRATION_REQ_FLAG is set to '1' for this BCMC flow received after an idle handoff, the mobile station shall perform a BCMC registration immediately.

- Otherwise, if the BCMC registration required timer is not enabled, the mobile station shall perform the following:

- Enable the BCMC registration required timer with the initial value set to a pseudorandom value between 0 and REGISTRATION_REQ_TIMER_MAX.
- Subsequently, if the BCMC_FLOW_LIST$_s$[i].REGISTRATION_REQ_FLAG for all BCMC flows being monitored by the mobile station are equal to '0', the mobile station shall disable the BCMC registration required timer.
- Otherwise, when the BCMC registration required timer expires, the mobile station shall perform a BCMC registration.

If the mobile station is to perform BCMC registration due to a frequency change, layer 3 shall perform the following:

- If the BCMC frequency registration timer for target frequency is enabled and has not expired, the mobile station shall not perform the remaining procedures in this section.
- Otherwise, the mobile station shall enter the System Access State with a registration indication.

2.6.13.4 Procedures for Idle Handoff while Monitoring Forward Supplemental Channel

While monitoring a Forward Supplemental Channel, if the conditions for performing an idle handoff are detected (see 2.6.2.1.4), the mobile station shall perform an idle handoff as specified in this section.

When the mobile station performs an idle handoff the BCMC registration required timer shall be disabled.

While performing an idle handoff, the mobile station should not begin operating in non-slotted mode after the idle handoff if all of the following conditions hold:

- The mobile station supports the Quick Paging Channel;
- The mobile station has knowledge that the new base station supports configuration change indicators;
- The mobile station determines that the Quick Paging Channel configuration change indicator for the new Quick Paging Channel is set to "OFF" (see 2.6.2.1.2.1); and
- No more than T_{31m} seconds have elapsed since the mobile station last received a valid message on the new Paging Channel or Forward Common Control Channel/Primary Broadcast Control Channel.

Otherwise, the mobile station shall operate in non-slotted mode until the mobile station has received at least one valid configuration message or mobile station-addressed page on the new Paging Channel or Forward Common Control Channel/Primary Broadcast Control Channel. Following the reception of this message the mobile station may resume slotted mode operation in accordance with 2.6.2.1.1.3. After performing an idle handoff, the mobile station shall discard all unprocessed messages received on the old Paging Channel or Forward Common Control Channel/Primary Broadcast Control Channel.

If the new base station is listed in NGHBR_REC_LIST for the old base station (see 2.6.2.2.3, 2.6.2.2.7, and 2.6.2.1.4.1), the mobile station shall use the corresponding 3-bit

NGHBR_CONFIG field to determine the actions required to transition to the new base station. If the new base station is not listed in NGHBR_REC_LIST for the old base station, the mobile station shall perform the handoff operation using the same procedure as for a pilot in NGHBR_REC_LIST with the NGHBR_CONFIG field set to '011'.

If the new base station is listed in $BCMC\_FLOW\_LIST_S$[i].LPM_INFO[j].NGHBR_INFO[k] record of the current base station, the mobile station shall use the corresponding 3-bit NGHBR_BCMC_CONFIG field to determine the actions required to monitor the Forward Supplemental Channel of the new base station. If the new base station is not listed in $BCMC\_FLOW\_LIST_S$[i].LPM_INFO[j].NGHBR_INFO[k] record for the current base station, the mobile station shall determine the actions required to monitor the Forward Supplemental Channel of the new base station using the same procedure as for a pilot in $BCMC\_FLOW\_LIST_S$[i].LPM_INFO[j].NGHBR_INFO[k] record with the NGHBR_BCMC_CONFIG field set to '000'.

If the mobile station is currently monitoring the Paging Channel and selected a neighbor base station for idle handoff which supports Primary Broadcast Control Channel, the mobile station shall perform the following:

- If the mobile station has not received parameters for the Primary Broadcast Control Channel of the neighbor base station from the *BCMC System ParametersMessage*, the mobile station shall enter the System Determination Substate of the Mobile Station Initialization State with a new system indication, upon performing idle handoff to this neighbor base station.
  - Upon entering the Mobile Station Idle State of the new system, the mobile station shall resume monitoring the BCMC flow(s) as specified in 2.6.13.6.
  - The mobile station shall not perform any of the remaining procedures in this section.

If the NGHBR_CONFIG field is '011', the mobile station shall perform the following:

- Enter the System Determination Substate of the Mobile Station Initialization State with a new system indication (see 2.6.1.1)
- Upon entering the Mobile Station Idle State of the new system, the mobile station shall resume monitoring the BCMC flow(s) as specified in 2.6.13.6.
- The mobile station shall not perform any of the remaining procedures in this section.

If the NGHBR_BCMC_CONFIG field is '000' or '011', the mobile station shall perform the following:

- The mobile station shall perform idle handoff according to the procedures in 2.6.2.1.4.1 just as if the mobile station is currently not monitoring a Forward Supplemental Channel.
- Upon completing the idle handoff, the mobile station shall resume monitoring the BCMC flow as specified in 2.6.13.6.

If the NGHBR_BCMC_CONFIG field is '001' or '010', the mobile station shall perform the

following:

- If the mobile station has monitored the Paging Channel before the idle handoff, or the mobile station has monitored the Forward Common Control Channel/Primary Broadcast Control Channel before the idle handoff and NGHBR_CONFIG field is set to '001', the mobile station shall perform the following:
  - The mobile station shall set $ACC\_MSG\_SEQ_S$ and CURR_ACC_MSG_SEQ to NULL and shall set $PILOT\_PN_S$ to the pilot offset index of the base station transmitting the new Paging Channel.
  - If the stored information for any of the Paging Channels on the associated NGHBR_FSCH_FREQ of the new base station is current, the mobile station shall perform the following:
    - The mobile station shall use the hash algorithm specified in 2.6.7.1 to select a new Paging Channel number in the range 1 to $PAGE\_CHAN_S$, where $PAGE\_CHAN_S$ is the value stored for the Paging Channel whose stored information is current. The mobile station shall store the new Paging Channel number as $PAGECH_S$. The mobile station shall perform the following:
      - If the mobile station has not stored configuration parameters for the new Paging Channel, or if the stored parameters are not current (see 2.6.2.2), the mobile station shall set $CONFIG\_MSG\_SEQ_S$, $SYS\_PAR\_MSG\_SEQ_S$, $NGHBR\_LST\_MSG\_SEQ_S$, $EXT\_NGHBR\_LST\_MSG\_SEQ_S$, $GEN\_NGHBR\_LST\_MSG\_SEQ_S$, $CHAN\_LST\_MSG\_SEQ_S$, $EXT\_SYS\_PAR\_MSG\_SEQ_S$, $USER\_ZONE\_ID\_MSG\_SEQ_S$, $PRI\_NGHBR\_LST\_MSG\_SEQ_S$, and $EXT\_GLOB\_SERV\_REDIR\_MSG\_SEQ_S$, $EXT\_CHAN\_LST\_MSG\_SEQ_S$, $FD\_CHAN\_LST\_MSG\_SEQ_S$, and $GLOB\_SERV\_REDIR\_MSG\_SEQ_S$ to NULL.
      - If the stored information for the new Paging Channel is current, the mobile station shall set $CONFIG\_MSG\_SEQ_S$ to the stored information for the new Paging Channel and set NGHBR_REC_LIST, $FBSCH\_LIST_S$, and $BCMC\_FLOW\_LIST_S$ to the stored information for the new Paging Channel.
    - If the mobile station has monitored the Forward Common Control Channel/Primary Broadcast Control Channel before the idle handoff, the mobile station shall set $PRAT_S$ = '00'.
    - If $CDMACH_S$ is not equal to NGHBR_FSCH_FREQ, the mobile station shall set $CDMACH_S$ to NGHBR_FSCH_FREQ and tune to the new CDMA Channel. The mobile station shall begin monitoring the new Paging Channel and the Forward Supplemental Channel of the new base station.

- If none of the Paging Channel stored information on the associated NGHBR_FSCH_FREQ of the new base station are current, the mobile station shall perform the following:
  - The mobile station shall set $CONFIG\_MSG\_SEQ_S$, $SYS\_PAR\_MSG\_SEQ_S$, $NGHBR\_LST\_MSG\_SEQ_S$, $EXT\_NGHBR\_LST\_MSG\_SEQ_S$, $GEN\_NGHBR\_LST\_MSG\_SEQ_S$, $CHAN\_LST\_MSG\_SEQ_S$, $EXT\_SYS\_PAR\_MSG\_SEQ_S$, $GLOB\_SERV\_REDIR\_MSG\_SEQ_S$, $EXT\_GLOB\_SERV\_REDIR\_MSG\_SEQ_S$, $EXT\_CHAN\_LST\_MSG\_SEQ_S$, $FD\_CHAN\_LST\_MSG\_SEQ_S$, $USER\_ZONE\_ID\_MSG\_SEQ_S$, and $PRI\_NGHBR\_LST\_MSG\_SEQ_S$ to NULL.
  - If the mobile station has monitored the Forward Common Control Channel/Primary Broadcast Control Channel before the idle handoff, the mobile station shall set $PRAT_S$ = '00'.
  - The mobile station shall set $PAGE\_CHAN_S$ to '1' and $PAGECH_S$ to the Primary Paging Channel. If $CDMACH_S$ is not equal to NGHBR_FSCH_FREQ, the mobile station shall set $CDMACH_S$ to NGHBR_FSCH_FREQ and tune to the new CDMA Channel. The mobile station shall begin monitoring the Primary Paging Channel and Forward Supplemental Channel of the new base station.
- If $PACA_S$ is equal to enabled, the mobile station shall enter the *Update Overhead Information Substate* of the *System Access State* (see 2.6.3) with an origination indication within T_{33m} seconds to re-originate the PACA call using the new base station.

• If the mobile station has monitored the Forward Common Control Channel/Primary Broadcast Control Channel before the idle handoff or if the mobile station has monitored the Paging Channel before the idle handoff, and selected a neighbor base station for idle handoff which supports Primary Broadcast Control Channel and the mobile station has received parameters for the Primary Broadcast Control Channel of the neighbor base station from the *BCMC System Parameters Message*, the mobile station shall perform the following:

- The mobile station shall set $ACC\_MSG\_SEQ_S$ and CURR_ACC_MSG_SEQ to NULL and shall set $PILOT\_PN_S$ to the pilot offset index of the base station transmitting the new Forward Common Control Channel/Primary Broadcast Control Channel.
- If the stored information for any of the Forward Common Control Channels and Primary Broadcast Control Channel on the associated NGHBR_FSCH_FREQ of the new base station is current, the mobile station shall perform the following:
  - The mobile station shall use the hash algorithm specified in 2.6.7.1 to select a new Forward Common Control Channel number in the range 1 to NUM_FCCCH_S, where NUM_FCCCH_S is the stored value. The mobile station shall store the new Forward Common Control Channel number as $FCCCH\_ID_S$. The mobile station shall perform the following:

- If the mobile station has not stored configuration parameters for the new Forward Common Control Channel and Primary Broadcast Control Channel, or if the stored parameters are not current (see 2.6.2.2), the mobile station shall set $CONFIG\_MSG\_SEQ_S$, $A41\_SYS\_PAR\_MSG\_SEQ_S$, $UNI\_NGHBR\_LST\_MSG\_SEQ_S$, $MC\_RR\_PAR\_MSG\_SEQ_S$, $EXT\_GLOB\_SERV\_REDIR\_MSG\_SEQ_S$, $EXT\_CHAN\_LST\_MSG\_SEQ_S$, $FD\_CHAN\_LST\_MSG\_SEQ_S$, $USER\_ZONE\_ID\_MSG\_SEQ_S$, and $PRI\_NGHBR\_LST\_MSG\_SEQ_S$ to NULL.
- If the stored information for the new Forward Common Control Channel and Primary Broadcast Control Channel is current, the mobile station shall set $CONFIG\_MSG\_SEQ_S$ to the stored information for the new Forward Common Control Channel and Primary Broadcast Control Channel and set NGHBR_REC_LIST to the stored information for the new Forward Common Control Channel and Primary Broadcast Control Channel.

+ If $CDMACH_S$ is not equal to NGHBR_FSCH_FREQ, the mobile station shall set $CDMACH_S$ to NGHBR_FSCH_FREQ and tune to the new CDMA Channel. The mobile station shall begin monitoring the new Forward Common Control Channel/Primary Broadcast Control Channel and the Forward Supplemental Channel of the new base station.

– If none of the Forward Common Control Channel and Primary Broadcast Control Channel stored information on the associated NGHBR_FSCH_ FREQ of the new base station are current, the mobile station shall perform the following:

+ The mobile station shall set the mobile station shall set $CONFIG\_MSG\_SEQ_S$, $A41\_SYS\_PAR\_MSG\_SEQ_S$, $UNI\_NGHBR\_LST\_MSG\_SEQ_S$, $MC\_RR\_PAR\_MSG\_SEQ_S$, $EXT\_GLOB\_SERV\_REDIR\_MSG\_SEQ_S$, $EXT\_CHAN\_LST\_MSG\_SEQ_S$, $FD\_CHAN\_LST\_MSG\_SEQ_S$, $USER\_ZONE\_ID\_MSG\_SEQ_S$, and $PRI\_NGHBR\_LST\_MSG\_SEQ_S$ to NULL.

+ If $CDMACH_S$ is not equal to NGHBR_FSCH_FREQ, the mobile station shall set $CDMACH_S$ to NGHBR_FSCH_FREQ and tune to the new CDMA Channel. The mobile station shall begin monitoring the Primary Broadcast Control Channel of the new base station, using the same rate, code rate, and code channel. The mobile station shall begin monitoring the Forward Supplemental Channel of the new base station.

– If $PACA_S$ is equal to enabled, the mobile station shall enter the *Update Overhead Information Substate* of the *System Access State* (see 2.6.3) with an origination indication within T_{33m} seconds to re-originate the PACA call using the new base station.

2.6.13.5 Procedures for stopping reception of a BCMC Flow

If Layer 3 is requested by the BCMC Service Layer to stop monitoring a BCMC flow given by BCMC_FLOW_ID, the mobile station perform the following:

- Layer 3 shall send a *BMAC-Stop-Deliver.Request(FSCH_ID, BSR_ID)* to the multiplex sublayer where *FSCH_ID* and *BSR_ID* are the values in $BCMC\_FLOW\_LIST_S$ corresponding to this BCMC_FLOW_ID.
- If this is the only BCMC flow being monitored on this Forward Supplemental Channel, the mobile station shall stop monitoring this Forward Supplemental Channel.
- If this is the only BCMC flow being monitored on this frequency, the mobile station shall return to the hash-to frequency as follows:
  - If the mobile station is currently monitoring the Paging Channel, the mobile station shall monitor the CDMA Channel List Message or Extended CDMA Channel List Message to determine the hash-to frequency as specified in 2.6.2.2.4 and 2.6.2.2.12.1 respectively.
  - If the mobile station is currently monitoring the Primary Broadcast Control Channel/Forward Common Control Channel, the mobile station shall monitor the *Extended CDMA Channel List Message* to determine the hash-to frequency as specified in 2.6.2.2.12.2.
  - If this results in the mobile station residing in a frequency other than the frequency prior to stopping BCMC flow reception, the mobile station shall perform BCMC registration procedures as specified in 2.6.13.3 to indicate change in the frequency.

2.6.13.6 Procedures for Handling *BCMC Service Parameters Message* Updates

If the mobile station determines that the contents of the *BCMC Service Parameters Message* has changed or that the *BCMC Service Parameters Message* is not being transmitted anymore, the mobile station shall perform the following:

- If $SENDING\_BSPM_S$ equals ‘0’, the mobile station shall perform the following:
  - For each BCMC flow currently being monitored, Layer 3 shall send a *BCMC-Monitor.Response(BCMC_FLOW_ID, result = FAILURE, cause = FLOW_NOT_AVAILABLE, reason_ind)* to the BCMC Service Layer, where *reason_ind* is set to MOBILITY if this is due to idle handoff or to CURRENT_SYS otherwise.
  - For each BCMC flow currently being monitored, Layer 3 shall send a *BMAC-Stop-Deliver.Request(FSCH_ID, BSR_ID)* to the multiplex sublayer where *FSCH_ID* and *BSR_ID* are the values in the previous BCMC_FLOW_LIST corresponding to this BCMC_FLOW_ID.
  - The mobile station shall not perform the remaining procedures in this section.

- For each BCMC flow that the mobile station is currently monitoring, if the mobile station determines that the base station is not transmitting this BCMC flow anymore, the mobile station shall perform the following:
  - Layer 3 shall send a *BCMC-Monitor.Response(BCMC_FLOW_ID, result=FAILURE, cause= FLOW_NOT_AVAILABLE, reason_ind)* to the BCMC Service Layer, where *reason_ind* is set to MOBILITY if this is due to idle handoff or to CURRENT_SYS otherwise, and shall stop monitoring this BCMC flow as specified in 2.6.13.5.
- For each BCMC flow that the mobile station is currently monitoring, if the mobile station determines that this BCMC flow is being transmitted on a different Forward Supplemental Channel than currently transmitted, the mobile station shall perform the following:
  - If more than one BCMC flows that the mobile station is currently monitoring are still available, then the mobile station shall choose the frequency based on the BCMC flow with the highest priory; if the BCMC flow is configured for transmission in the mobile station's hash-to-frequency, the mobile station shall choose the mobile station's hash-to-frequency; otherwise, the mobile station shall use the hash algorithm specified in 2.6.7.1 and the number of CDMA channels on which this BCMC_FLOW_ID is configured for transmission to choose the frequency to monitor.
  - Layer 3 shall send a *BMAC-Stop-Deliver.Request(FSCH_ID, BSR_ID)* to the multiplex sublayer where *FSCH_ID* and *BSR_ID* are the values in the previous BCMC_FLOW_LIST corresponding to this BCMC_FLOW_ID.
  - The mobile station shall determine the band class (FSCH_BAND_CLASS) and CDMA channel (FSCH_FREQ) corresponding to the selected Forward Supplemental Channel from $FBSCH\_LIST_S$. If FSCH_BAND_CLASS is not equal to $CDMA\_BAND_S$ or FSCH_FREQ is not equal to $CDMACH_S$ and the mobile station is currently monitoring one or more BCMC flows in the current frequency that have a higher priority than this BCMC flow, Layer 3 shall send a *BCMC-Monitor.Response(BCMC_FLOW_ID, result = FAILURE, cause = CANNOT_ACCOMMODATE, reason_ind)* to the BCMC Service Layer, where *reason_ind* is set to MOBILITY if this is due to idle handoff or to CURRENT_SYS otherwise, and shall not perform the remaining procedures in this section.
  - If the mobile station will not be able to monitor the Forward Supplemental Channel on which the BCMC flow is being transmitted due to a capability mismatch, Layer 3 shall send a *BCMC-Monitor.Response(BCMC_FLOW_ID, result = FAILURE, cause = UNSUPPORTED_BEARER_CONFIG, reason_ind)* to the BCMC Service Layer, where *reason_ind* is set to MOBILITY if this is due to idle handoff or to CURRENT_SYS otherwise, and shall not perform the remaining procedures in this section for this BCMC flow.
  - If FSCH_BAND_CLASS is not equal to $CDMA\_BAND_S$ or FSCH_FREQ is not equal to $CDMACH_S$, the mobile station shall perform the following:
    - If $FREQ\_CHG\_REG\_REQUIRED_S$ equals '1', the mobile station shall perform BCMC registration procedures as specified in 2.6.13.3 to indicate change in

the frequency where the mobile station will reside while monitoring this BCMC flow.

+ The mobile station shall tune to FSCH_FREQ in FSCH_BAND_CLASS; the mobile station should tune to the new frequency only after performing BCMC registration (if any) specified above. If $FREQ\_CHG\_REG\_TIMER_S$ is not equal to NULL and the BCMC frequency registration timer for the previous frequency is not enabled or is enabled and has not expired, the mobile station shall start the BCMC frequency registration timer for the previous frequency with a value of $FREQ\_CHG\_REG\_TIMER_S$.

+ For each BCMC flow in current frequency that can no longer be monitored in new frequency, the mobile station shall perform the following:

  o Layer 3 shall send a *BCMC-Monitor.Response(BCMC_FLOW_ID, result=FAILURE, cause= CANNOT_ACCOMMODATE, reason_ind)* to the BCMC Service Layer, where *reason_ind* is set to MOBILITY if this is due to idle handoff or to CURRENT_SYS otherwise.

  o Layer 3 shall send a *BMAC-Stop-Deliver.Request(FSCH_ID, BSR_ID)* to the multiplex sublayer where *FSCH_ID* and *BSR_ID* are the values in $BCMC\_FLOW\_LIST_S$ corresponding to this BCMC_FLOW_ID.

– The mobile station shall set the Forward Supplemental Channel parameters as given in $FBSCH\_LIST_S$ and shall start to monitor the Forward Supplemental Channel.

– The mobile station shall send a *BMAC-Start-Deliver.Request(FSCH_ID, BSR_ID)* to the multiplex sublayer where *FSCH_ID* and *BSR_ID* are the values in $BCMC\_FLOW\_LIST_S$ corresponding to the logical-to-physical mapping selected for this BCMC_FLOW_ID.

• For any BCMC flow that the mobile station is currently monitoring, if the mobile station determines to monitor this BCMC flow on a traffic channel (e.g., BCMC_FLOW_ON_IND corresponding to this BCMC flow equals ‘0’, and BCMC_FLOW_ON_TRAFFIC_IND corresponding to this BCMC flow equals ‘1’), the mobile station shall perform the following:

– For each BCMC flow currently being monitored in the *Mobile Station Idle State*, Layer 3 shall send a *BCMC-Monitor.Response(BCMC_FLOW_ID, result=FAILURE, cause= CANNOT_ACCOMMODATE, reason_ind)* to the BCMC Service Layer, where *reason_ind* is set to MOBILITY if this is due to idle handoff or to CURRENT_SYS otherwise, and shall stop monitoring this BCMC flow as specified in 2.6.13.5.

– The mobile station shall perform Mobile Station Origination Operation as specified in 2.6.2.5 to request monitoring of this BCMC flow on the *Traffic Channel Substate*. The mobile station shall include the BCMC_FLOW_ID (See section 2.6.13.11) in the *Origination Message*.

2.6.13.7 Procedures for Browsing BCMC Flows

If Layer 3 is requested by the BCMC Service Layer to report list of all available BCMC flows (see 2.6.13), the mobile station shall perform the following procedures in the order specified:

- If $SENDING\_BSPM_S$ equals ‘0’, Layer 3 shall send a *BCMC-Browse.Response(result=FAILURE)* to the BCMC Service Layer.
- Otherwise, if FULL_BSPM_IND = ‘0’, the mobile station shall monitor the overhead channel to receive the *BCMC Service Parameters Message* as specified in 2.6.2.2.18 or until FULL_BSPM_IND = ‘1’, and shall perform the following:
  - Layer 3 shall send a *BCMC-Browse.Response(result = SUCCESS, {BCMC_FLOW_IDs}}* to the BCMC Service Layer where $\{BCMC\_FLOW\_ID_S\}$ is a list of all unique BCMC flows configured for transmission in this sector as determined from the stored *BCMC Service Parameters Message* parameters.

2.6.13.8 Procedures for BCMC Operation while on Traffic Channel

This section specifies the mobile station requirements for BCMC feature while in the Mobile Station Control on the Traffic Channel State.

If Layer 3 is requested by the BCMC Service Layer to commence reception of a BCMC flow (see 2.6.13), the mobile station shall send *Enhanced Origination Message* as specified in 2.6.4.3.

If Layer 3 is requested by the BCMC Service Layer to stop monitoring a BCMC flow (see 2.6.13), the mobile station shall release a BCMC call as specified in 2.6.4.3.

If the mobile station is monitoring BCMC flow on traffic channel, when traffic channel is released and the BCMC Service Layer has not requested to stop monitoring the BCMC flow, the mobile station shall either continue monitoring the BCMC flow in idle state (see 2.6.13) or the Layer 3 shall send a *BCMC-Monitor.Response(BCMC_FLOW_ID, result = FAILURE, cause = CALL_RELEASED)* to the BCMC Service Layer.

2.6.13.9 Procedures for Computation of Authorization Signature

For each BCMC flow included in the *Registration Message*, *Origination Message*, *Page Response Message* and *Enhanced Origination Message*, if $BCMC\_FLOW\_LIST_S[i].AUTH\_SIGNATURE\_REQ\_IND$ equals ‘1’, then the mobile station shall compute the Authorization Signature value for the BCMC flow as follows:

- The mobile station shall create an input working buffer to EHMACSHA as shown in Table 2.6.13.9 1.

Table 2.6.13.9-1. Subfields of the input working buffer

Subfield	Length (bits)
TIME_STAMP_LONG	TIME_STAMP_LONG_LENGTHs

TIME_STAMP_LONG The mobile station shall set this field to the LSBs of the CDMA System Time, in units of $2^{TIME\_STAMP\_UNIT_s}$ slots, corresponding to a time that is not later than when the Physical Layer will begin transmission of the *Registration Message*, *Origination Message*, *Page Response Message*, or *Enhanced Origination Message* that will carry this Authorization Signature. The mobile station shall use the same TIME_STAMP_LONG field for computing all Authorization Signature parameters included in a *Registration Message*, *Origination Message*, *Page Response Message* or a *Enhanced Origination Message*.

- The mobile terminal shall compute the Authorization Signature value as follows using the EHMACSHA procedure as specified in [43], section 3.3.
  - The KEY parameter of EHMACSHA shall be set to BAK.
  - The L_KEY parameter of EHMACSHA shall be set to 16, identifying the length of BAK in octets.
  - The MESSAGE parameter of EHMACSHA shall be set to the pointer to the most significant bit of the input working buffer.
  - The MESSAGE_OFFSET parameter of EHMACSHA shall be set to 0.
  - The MESSAGE_LENGTH parameter of EHMACSHA shall be set to the number of bits of data in the input working buffer
  - The HMAC parameter of EHMACSHA shall be set to the pointer to the most significant bit of the output buffer that will contain the computed MAC value.
  - The L_HMAC parameter of EHMACSHA shall be set to 4, identifying the length of the output in octets.

The mobile station shall set the AUTH_SIGNATURE field to the 32 least significant bits of the Message Digest computed MAC value obtained in the previous step.

2.6.13.10 Procedures for Public Long Code Mask schemes

2.6.13.10.1 Procedures for BCMC Flow ID based autonomous PLCM generation

The Public Long Code Mask of the Forward Supplemental Channel to be received in idle state is determined as follows:

- If the first occurrence of the BCMC_FLOW_ID (see section 2.6.13.11) in the *BCMC Service Parameters Message* multiplexed on this Forward Supplemental Channel is 16bits, FIRST_FLOW_ID shall be set as follows.
  - The 16 MSBs shall be set to sixteen ‘0’s.
  - The 16 LSBs shall be set to the BCMC_FLOW_ID.

- If the first occurrence of the BCMC_FLOW_ID (see section 2.6.13.11) in the *BCMC Service Parameters Message* multiplexed on this Forward Supplemental Channel is 24bits, FIRST_FLOW_ID shall be set as follows.
  - The 8 MSBs shall be set to eight ‘0’s.
  - The 24 LSBs shall be set to the BCMC_FLOW_ID.
- If the first occurrence of the BCMC_FLOW_ID (see section 2.6.13.11) in the *BCMC Service Parameters Message* multiplexed on this Forward Supplemental Channel is 32bits, FIRST_FLOW_ID shall be set to the BCMC_FLOW_ID.
- Set the FIRST_BSR_ID to the BSR_ID corresponding to the FIRST_FLOW_ID in the *BCMC Service Parameters Message* multiplexed on this Forward Supplemental Channel.
- PLCM_42 is set as follows.
  - Bits P41 through P35 shall be set to ‘1100111’.
  - Bits P34 through P3 shall be set to FIRST_FLOW_ID.
  - Bits P2 through P0 shall be set to FIRST_BSR_ID.

2.6.13.10.2 Procedures for index based PLCM generation

The Public Long Code Mask of the Forward Supplemental Channel to be received in idle state is determined as follows:

- PLCM_42 is set as follows.
  - Bits P41 through P24 shall be set to ‘110011100110111000’.
  - Bits P23 through P16 shall be set to $FSCH\_PLCM\_INDEX_S$.
  - Bits P15 through P0 shall be set to ‘0000000000000000’.

2.6.13.11 BCMC_FLOW_ID generation

The BCMC_FLOW_ID structure is shown in Figure 2.6.13.11-1.

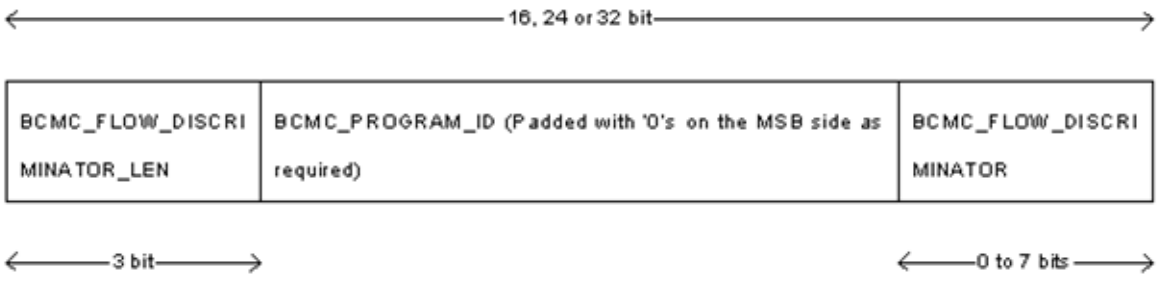

Figure 2.6.13.11-1. Structure of BCMC_FLOW_ID

BCMC_FLOW_ID is obtained by concatenating the BCMC_FLOW_DISCRIMINATOR_LEN field, the BCMC_PROGRAM_ID field, and BCMC_FLOW_DISCRIMINATOR fields as follows:

- The exact contents of the 3 bit BCMC_FLOW_DISCRIMINATOR_LEN field,
- The unsigned binary value of the BCMC_PROGRAM_ID field padded with '0's on the most significant bits as necessary to satisfy the following:
  - If the sum of the lengths of the BCMC_FLOW_DISCRIMINATOR_LEN, BCMC_PROGRAM_ID, and BCMC_FLOW_DISCRIMINATOR fields is less than or equal to 16 bits, then the BCMC_FLOW_ID shall be of 16 bits length.
  - If the sum of the lengths of the BCMC_FLOW_DISCRIMINATOR_LEN, BCMC_PROGRAM_ID, and BCMC_FLOW_DISCRIMINATOR fields is less than or equal to 24 bits but greater than 16 bits, then the BCMC_FLOW_ID shall be of 24 bits length.
  - If the sum of the lengths of the BCMC_FLOW_DISCRIMINATOR_LEN, BCMC_PROGRAM_ID, and BCMC_FLOW_DISCRIMINATOR fields is less than or equal to 32 bits but greater than 24 bits, then the BCMC_FLOW_ID shall be of 32 bits length.
- and the exact content of the BCMC_FLOW_DISCRIMINATOR field, where the length of this field is specified by the value of BCMC_FLOW_DISCRIMINATOR_LEN.

The length of a BCMC_FLOW_ID shall be 16, 24, or 32 bits.

2.6.13.12 BCMC TDM

Base station may multiplex multiple BCMC flows on a single F-SCH. Time Division Multiplexing (TDM) is an optional feature that supports BCMC. When multiple flows are multiplexed on a single F-SCH, the base station may include TDM related parameters. Mobile station can use TDM related parameters to save battery, by waking up only when BCMC_FLOW that MS is interested in is transmitted.

TDM related parameters are included in *BCMC Service Parameters Message*. TDM related parameters are TDM_STRUCTURE_IND, TDM_SLOT_LENGTH, TDM_SUPER_PERIOD_MASK_LEN, TDM_MEGA_PERIOD_MASK_LEN, TDM_USED_IND, TDM_MASK, TDM_SUPER_PERIOD_MASK_INCL, TDM_SUPER_PERIOD_MASK, TDM_MEGA_PERIOD_MASK_INCL, TDM_MEGA_PERIOD_MASK.

TDM parameters include 3 levels TDM masks TDM_MASK, TDM_SUPER_PERIOD_MASK and TDM_MEGA_PERIOD_MASK. These masks indicate BCMC flow to F-SCH time slot mapping.

Each bit of TDM_MASK indicates presence of a flow on a slot. Length of a slot is defined by TDM_SLOT_LENGTH. Each bit of TDM_SUPER_PERIOD_MASK indicates presence of a flow on a super slot. Super slot length is equal to slot length multiplied by number of bits in TDM_MASK. Each bit of TDM_MEGA_PERIOD_MASK indicates presence of a flow on a mega slot. Super slot length is equal to super slot length multiplied by number of bits in TDM_SUPER_PERIOD_MASK.

When outercoding is used TDM_SUPER_PERIOD_MASK length is always 16 bits, but only partial mask (first part) is included in the *BCMC Service Parameters Message*. Remaining bits in the mask that are not included in the *BCMC Service Parameters Message* are “don’t care” bits, and the mobile station can decide if remaing slots need to be received based on outercoding algorithm.

Subsection 2.6.13.12.1 defines how TDM period is aligned with system time.

2.6.13.12.1 BCMC TDM period alignment requirement

Each TDM period for a BCMC flow on a particular Forward Supplemental Channel starts when the system time (t) in 20 ms units satisfies the following equation:

- If outer coding is used for the FSCH where this BCMC flow is transmitted (i.e. FSCH_OUTER_CODE_INCL for the FSCH is equal to ‘1’)

  t mod (TDM period) = FSCH_OUTERCODE_OFFSET

  where FSCH_OUTERCODE_OFFSET is the outer coding buffer offset for the FSCH where this BCMC flow is transmitted

- Otherwise

  t mod (TDM period) = 0

Here, TDM period is calculated as following:

- If TDM_MEGA_PERIOD_MASK_INCL for the BCMC flow on this particular Forward Supplemental Channel is equal to ‘1’

  TDM period = (duration of mega slot in 20 ms units) $\times$ (length of TDM_MEGA_PERIOD_MASK in bits)

- Otherwise

  TDM period = duration of mega slot in 20 ms units

2.6.14 Common Procedures for Processing r-csch Messages

This section describes the common procedures for processing messages sent on the r-csch.

2.6.14.1 Reporting Band Class – Band Subclass Capabilities

If the $FD\_CHAN\_LST\_IND_s$ is set to ‘0’ and $CAND\_BAND\_INFO\_REQ_r$ is set to '1' in the *Extended System Parameters Message* or in the *MC-RR Parameters Message*, the mobile station shall report band subclass capabilities via the *Registration Message*, *Origination Message* or *Page Response Message* . If the $FD\_CHAN\_LST\_IND_s$ is set to ‘1’ and $CAND\_BAND\_INFO\_REQ_r$ is set to '1' the mobile station shall use *General Extension Message* to carry the the *Registration Message*, *Origination Message* or *Page Response Message* and include Supported Band Class - Subclass Record. The mobile station shall perform the following procedures when reporting band class:

- In the procedures below, the following assumptions apply:

- For band classes defined with multiple band subclasses, the mobile station shall indicate support of this band class if at least one band subclass is supported.
- If the mobile station supports a candidate band class but it is not aware of any band subclass definition for that band class, the mobile station shall report its capabilities as if it supports band subclass 0 of that band class.

- If the mobile station supports at least one band class and band subclass (if applicable) combination queried by the base station, the mobile station shall set BAND_SUB_REP_INCL to '1'; otherwise, the mobile station shall set this field to ‘0’ and shall not perform the remaining procedures.
- The mobile station shall initialize NUM_BAND_SUBCLASS to ‘0000’.
- If the mobile station supports all candidate band class and band subclass (if applicable) combinations queried by the base station, the mobile station shall not perform the remaining procedures; otherwise, for i = 1 to $NUM\_CAND\_BAND\_CLASS_S$, the mobile station shall perform the following:
  - If CAND_BAND_CLASS_REC[i]. SUBCLASS_INFO_INCL is equal to '0', the mobile station shall perform the following:
    - The mobile station shall include one instance of the BAND_SUBCLASS_SUP field and set it as follows. If the mobile station supports the candidate band class CAND_BAND_CLASS_REC[i].CAND_BAND_CLASS, the mobile station shall set this field to '1'; otherwise, it shall set it to '0'.
    - The mobile station shall increment NUM_BAND_SUBCLASS by 1.
  - Otherwise, for j = 0 to CAND_BAND_CLASS_REC[i].SUBCLASS_REC_LEN, if CAND_BAND_CLASS_REC[i].BAND_SUBCLASS_IND_REC[j] is equal to '1', the mobile station shall perform the following:
    - The mobile station shall include one instance of the BAND_SUBCLASS_SUP field and set it as follows. If the mobile station supports the band subclass CAND_BAND_CLASS_REC[i].BAND_SUBCLASS_IND_REC[j], the mobile station shall set this field to '1'; otherwise, it shall set it to '0'.
    - The mobile station shall increment NUM_BAND_SUBCLASS by 1.

Figure 2.6.14.1-1 illustrates the relationship between the base station CAND_BAND_CLASS, BAND_SUBCLASS_IND fields and the mobile station BAND_SUBCLASS_SUP fields for one possible scenario.

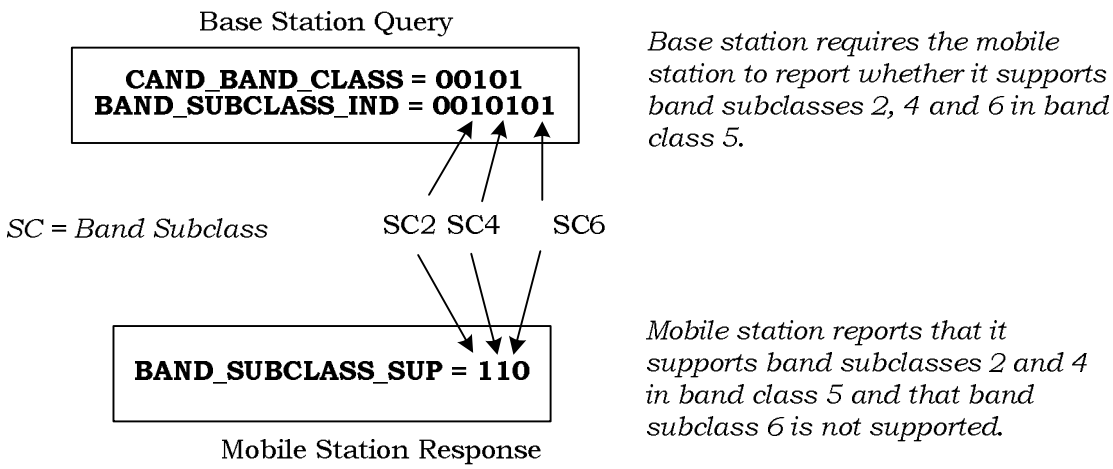

Figure 2.6.14.1-1. Illustration of Band Class - Band Subclass Reporting

2.6.15 MEID procedures when communicating with P_REV 6, 7, 8, 10 Base Stations

The mobile station shall conform to the requirements in [47] when communicating with a P_REV 6, 7, 8, or 10 base station.

2.6.16 Initialization of RC parameters

The mobile station shall initialize the RC parameters as follows:

- The mobile station shall set $FOR\_FCH\_ACK\_MASK\_RL\_BLANKING_S$ to '0001 1001 1001 1000' and set $FOR\_FCH\_ACK\_MASK\_NO\_RL\_BLANKING_S$ to '0000 1010 1010 1010'.
- The mobile station shall set $REV\_FCH\_ACK\_MASK_S$ to '0000 1010 1010 1010'.
- The mobile station shall set $FOR\_SCH\_ACK\_MASK\_RL\_BLANKING_S$ to '0000 0000 0001 1000' and set $FOR\_SCH\_ACK\_MASK\_NO\_RL\_BLANKING_S$ to '0000 0000 0010 1000'.
- The mobile station shall set $REV\_SCH\_ACK\_MASK_S$ to '0000 0000 0010 1010'.
- The mobile station shall set $FOR\_N2M\_IND_S$ to '001' (4 bad frames).
- The mobile station shall set RPC_MODE_S to '00' (200 to 400 bps).
- The mobile station shall set $PWR\_CNTL\_STEP\_ZERO\_RATE_S$ to '000' (1 dB).
- The mobile station shall set $FOR\_FCH\_BLANKING\_DUTYCYCLE_S$ to '001' (N=4).
- The mobile station shall set $REV\_FCH\_BLANKING\_DUTYCYCLE_S$ to '001' (N=4).
- The mobile station shall set _FCH_BLANKING_DUTYCYCLE_IN_USE to '001' (N=4).
- The mobile station shall set $REV\_ACKCH\_GAIN\_ADJ\_ACS1_S$ to '0000 000'.
- The mobile station shall set $REV\_ACKCH\_GAIN\_ADJ\_ACS2PLUS_S$ to '0000 000'.

- The mobile station shall initialize $RC\_PARAMS\_RECORD_S$ to have entry $RC\_PARAMS\_RECORD_S[i]$ for each of the PILOT_PNs assigned to mobile and initialize corresponding fields of each of the $RC\_PARAMS\_RECORD_S[i]$ record as follows:
  - Set $RC\_PARAMS\_RECORD_S[i]$.QOF_SET_IN_USE set to '000'.
  - Set $RC\_PARAMS\_RECORD_S[i]$.REV_SCH_ACK_CH_WALSH[00] to NULL.
  - Set $RC\_PARAMS\_RECORD_S[i]$.REV_SCH_ACK_BIT[00] to NULL.
  - Set $RC\_PARAMS\_RECORD_S[i]$.REV_SCH_ACK_CH_WALSH[01] to NULL.
  - Set $RC\_PARAMS\_RECORD_S[i]$.REV_SCH_ACK_BIT[01] to NULL.
  - Set $RC\_PARAMS\_RECORD_S[i]$.FOR_FCH_CCSH_INTERLEAVER_TYPE to '0'.

2.6.17 RC_PARAMS_RECORD update procedures

The mobile station shall update RC_PARAMS_RECORD in Traffic Channel Substate as follows:

- When a pilot is added to the active set for which there is no entry present in $RC\_PARAMS\_RECORD_S$, the mobile station shall update $RC\_PARAMS\_RECORD_S$ to add an entry $RC\_PARAMS\_RECORD_S[i]$ and perform the following:
  - Set $RC\_PARAMS\_RECORD_S[i]$.PILOT_PN to the PILOT_PN of the added pilot.
  - Set $RC\_PARAMS\_RECORD_S[i]$.QOF_SET_IN_USE to '000'.
  - Set $RC\_PARAMS\_RECORD_S[i]$.REV_SCH_ACK_CH_WALSH[00] to NULL.
  - Set $RC\_PARAMS\_RECORD_S[i]$. REV_SCH_ACK_BIT[00] to NULL.
  - Set $RC\_PARAMS\_RECORD_S[i]$. REV_SCH_ACK_CH_WALSH[01] to NULL.
  - Set $RC\_PARAMS\_RECORD_S[i]$. REV_SCH_ACK_BIT[01] to NULL.
  - Set $RC\_PARAMS\_RECORD_S[i]$. FOR_FCH_CCSH_INTERLEAVER_TYPE to '0'.
- When a pilot is removed from the active set for which there was an entry present in $RC\_PARAMS\_RECORD_S$, the mobile station shall update $RC\_PARAMS\_RECORD_S$ to remove the entry.
- When an *Radio Configuration Parameters Message* is received, the mobile station shall update $RC\_PARAMS\_RECORD_S$ as described in section 2.6.4.3.

2.6.18 Processing of General Extension Message

The base station may extend layer 3 messages with additional fields using the *General Extension Message*. The mobile station shall process this message at the action time:

- Explicitly specified in the message carried in the MESSAGE_REC field, or

- At the action time explicitly specified in the general extension record when the message carried in the MESSAGE_REC field does not carry action time explicitly, or
- implicity specified by the message carried in the MESSAGE_REC field when action time is not carried explicitly in the general extension record or the message carried in the MESSAGE_REC field

The mobile station shall process this message as follows:

- The mobile station shall store the ith occurrence of the $GE\_REC\_TYPE_r$ in $GE\_REC\_TYPE_s[i]$.
- The mobile station shall store the ith occurrence of the $GE\_REC\_LEN_r$ in $GE\_REC\_LEN_s[i]$.
- If any General Extension Record type is not supported, the mobile station shall send a *Mobile Station Reject Order* with ORDQ equal to 00011101.
- If any field value in any of the General Extension Records is outside its permissible range, the mobile station shall send a *Mobile Station Reject Order* with ORDQ equal to 00011110.
- If any field value in any of the General Extension Records is not supported, the mobile station shall send a *Mobile Station Reject Order* with ORDQ equal to 00011111.
- The mobile station shall store the ith occurrence of the GE_REC_r as follows.
- If $GE\_REC\_TYPE_s[i]$ is equal to '00000000' the mobile station shall store the $BAND\_CLASS_r$ field in the GE_REC_r as $BAND\_CLASS_s$ and REV_CHAN_r field in the GE_REC_r as REV_CHAN_s. The mobile station shall use the REV_CHAN_s channel number of $BAND\_CLASS_s$ as the associated reverse link for the channel carried in the message carried by the MESSAGE_REC field.
- If $GE\_REC\_TYPE_s[i]$ is equal to '00000001' the mobile station shall store and use the fields included in the Radio Configuration Parameters Record at the action time. If the USE_TIME field in the Radio Configuration Parameters Record is set to '0', the mobile station shall process the message contained in the MESSAGE_REC and then update the RC_PARAMS_RECORDs by the values of the fields included in the Radio Configuration Parameters Record.
- The mobile station shall use the MESSAGE_TYPE field as specified in [4] and process the reception of layer 3 message carried in the MESSAGE_REC field.

2.7 PDU Formats for Mobile Stations

This section describes the formats of the PDUs corresponding to the messages sent by the mobile station.

In any multi-bit field in the following messages, the most significant bit (MSB) shall be transmitted first.

Some bits in the PDUs are marked as RESERVED. These bits allow extension of the PDUs for future features and capabilities. The mobile station sets all reserved bits to '0'. Some fields include values marked as reserved. The mobile station shall not set a field to a value that is marked as reserved.

2.7.1 r-csch

This section describes the messages and their PDU formats sent by the mobile station on the r-csch.

2.7.1.1 Reserved

2.7.1.2 Reserved

2.7.1.3 PDU Formats on r-csch

The messages sent on the r-csch are summarized in Table 2.7.1.3-1.

Table 2.7.1.3-1. Messages on r-csch

Message Name	MSG_TAG	Section Number	P_REV_IN_USE[1]
Registration Message	RGM	2.7.1.3.2.1	All
Order Message	ORDM	2.7.1.3.2.2	All
Data Burst Message	DBM	2.7.1.3.2.3	All
Origination Message	ORM	2.7.1.3.2.4	All
Page Response Message	PRM	2.7.1.3.2.5	All
Authentication Challenge Response Message	AUCRM	2.7.1.3.2.6	All
Status Response Message	STRPM	2.7.1.3.2.7	1, 3
TMSI Assignment Completion Message	TACM	2.7.1.3.2.8	1, ≥ 4
PACA Cancel Message	PACNM	2.7.1.3.2.9	≥ 4
Extended Status Response Message	ESTRPM	2.7.1.3.2.10	≥ 4
Device Information Message	DIM	2.7.1.3.2.11	≥ 7
Security Mode Request Message	SMRM	2.7.1.3.2.12	≥ 7
Authentication Response Message	AURSPM	2.7.1.3.2.13	≥ 10
Authentication Resynchronization Message	AURSYNM	2.7.1.3.2.14	≥ 10
Reconnect Message	RCNM	2.7.1.3.2.15	≥ 9
Radio Environment Message	REM	2.7.1.3.2.16	≥ 11
Call Recovery Request Message	CRRM	2.7.1.3.2.17	≥ 12
General Extension Message	GEM	2.7.1.3.2.18	≥ 12

2.7.1.3.1 Reserved

2.7.1.3.2 PDU Contents

The following sections specify the contents of the PDU for each message that may be sent on the r-csch.

[1] P_REV_IN_USE equal to “All” implies all values applicable to the Band Class.

2.7.1.3.2.1 Registration Message

MSG_TAG: RGM

Field	Length (bits)
REG_TYPE	4
SLOT_CYCLE_INDEX	3
MOB_P_REV	8
SCM	8
MOB_TERM	1
RETURN_CAUSE	4
QPCH_SUPPORTED	0 or 1
ENHANCED_RC	0 or 1
UZID_INCL	0 or 1
UZID	0 or 16
GEO_LOC_INCL	0 or 1
GEO_LOC_TYPE	0 or 3
OTD_SUPPORTED	0 or 1
STS_SUPPORTED	0 or 1
3X_CCH_SUPPORTED	0 or 1
WLL_INCL	0 or 1
WLL_DEVICE_TYPE	0 or 3
HOOK_STATUS	0 or 4
ENC_INFO_INCL	0 or 1
SIG_ENCRYPT_SUP	0 or 8
C_SIG_ENCRYPT_REQ	0 or 1
NEW_SSEQ_H	0 or 24
NEW_SSEQ_H_SIG	0 or 8
UI_ENCRYPT_SUP	0 or 8
MSG_INT_INFO_INCL	0 or 1
SIG_INTEGRITY_SUP_INCL	0 or 1

(continues on next page)

Field	Length (bits)
SIG_INTEGRITY_SUP	0 or 8
SIG_INTEGRITY_REQ	0 or 3
NEW_KEY_ID	0 or 2
NEW_SSEQ_H_INCL	0 or 1
NEW_SSEQ_H	0 or 24
NEW_SSEQ_H_SIG	0 or 8
SIGN_SLOT_CYCLE_INDEX	0 or 1
BCMC_FREQ_INFO_INCL	0 or 1
BCMC_BAND_CLASS	0 or 5
BCMC_CDMA_FREQ	0 or 11
NUM_BCMC_PROGRAMS	0 or 6
AUTH_SIGNATURE_INCL	0 or 1
TIME_STAMP_SHORT_LENGTH	0 or 8
TIME_STAMP_SHORT	Variable

NUM_BCMC_PROGRAMS occurrences of the following field:

{ (NUM_BCMC_PROGRAMS)

BCMC_PROGRAM_ID_LEN	5
BCMC_PROGRAM_ID	BCMC_PROGRAM_ID _LEN + 1
BCMC_FLOW_DISCRIMINATOR_ LEN	3
NUM_FLOW_DISCRIMINATOR	BCMC_FLOW_DISCR IMINATOR_LEN

NUM_FLOW_DISCRIMINATOR+1 or 1 occurrences of the following variable length record:

{ (NUM_FLOW_DISCRIMINATOR+1) or 1

BCMC_FLOW_DISCRIMINATOR	BCMC_FLOW_DISCRIM INATOR_LEN
AUTH_SIGNATURE_IND	0 or 1
AUTH_SIGNATURE_SAME_IND	0 or 1
BAK_ID	0 or 4

AUTH_SIGNATURE	0 or 32

} (NUM_FLOW_DISCRIMINATOR+1) or 1

} (NUM_BCMC_PROGRAMS)

BAND_SUB_REP_INCL	0 or 1
NUM_BAND_SUBCLASS	0 or 4

NUM_BAND_SUBCLASS occurrences of the following field:

{ (NUM_BAND_SUBCLASS)

BAND_SUBCLASS_SUP	1

} (NUM_BAND_SUBCLASS)

ADD_GEO_LOC_INCL	0 or 1
ADD_GEO_LOC_TYPE_LEN_IND	0 or 1
ADD_GEO_LOC_TYPE	0 or 16 or 24

REG_TYPE – Registration type.

This field indicates which type of event generated the registration attempt.

The mobile station shall set this field to the REG_TYPE value shown in Table 2.7.1.3.2.1-1 corresponding to the event that caused this registration to occur (see 2.6.5.1).

Table 2.7.1.3.2.1-1. Registration Type (REG_TYPE) Codes

REG_TYPE (binary)	Type of Registration
0000	Timer-based (see 2.6.5.1.3)
0001	Power-up (see 2.6.5.1.1)
0010	Zone-based (see 2.6.5.1.5)
0011	Power-down (see 2.6.5.1.2)
0100	Parameter-change (see 2.6.5.1.6)
0101	Ordered (see 2.6.5.1.7)
0110	Distance-based (see 2.6.5.1.4)
0111	User Zone-based (see 2.6.5.1.10)
1000	Encryption Re-sync required (see 2.6.5.1.11)
1001	BCMC Registration (see 2.6.13.3)
All other REG_TYPE values are reserved.	

SLOT_CYCLE_INDEX – Slot cycle index.

If $P\_REV\_IN\_USE_S$ is less than 11, or if MIN_SLOT_CYCLE_INDEX is equal to ‘0’, the mobile station shall perform the following:

- If the mobile station is configured for slotted mode operation, the mobile station shall set this field to max (0, $SLOT\_CYCLE\_INDEX_p$) (see 2.6.2.1.1). Otherwise, the mobile station shall set this field to ‘000’.

Otherwise, the mobile station shall perform the following:

- If the mobile station is configured for slotted mode operation, the mobile station shall set this field to the absolute value of the preferred slot cycle index, $SLOT\_CYCLE\_INDEX_p$ (see 2.6.2.1.1); otherwise, the mobile station shall set this field to ‘000’. The sign of the preferred slot cycle index, $SLOT\_CYCLE\_INDEX_p$, is specified in the SIGN_SLOT_CYCLE_INDEX field of this message (see Table 2.7.1.3.2.1-8).

MOB_P_REV – Protocol revision of the mobile station.

The mobile station shall set this field to ‘00001100’.

SCM – Station class mark.

The mobile station shall set this field to its station class mark. See 2.3.3.

MOB_TERM – Mobile terminated calls accepted indicator.

If the mobile station is configured to accept mobile terminated calls while operating with the current roaming status (see 2.6.5.3), the mobile station shall set this bit to '1'. Otherwise, the mobile station shall set this bit to '0'.

RETURN_CAUSE – Reason of the mobile station registration or access.

The mobile station shall set this field to the RETURN_CAUSE value shown in Table 2.7.1.3.2.1-2 corresponding to the service redirection failure condition (see 2.6.1.1).

Table 2.7.1.3.2.1-2. RETURN_CAUSE Codes

RETURN_CAUSE (binary)	Redirect Failure Condition
0000	Normal access.
0001	Service redirection failed as a result of system not found.
0010	Service redirection failed as a result of protocol mismatch.
0011	Service redirection failed as a result of registration rejection.
0100	Service redirection failed as a result of wrong SID.
0101	Service redirection failed as a result of wrong NID.
All other RETURN_CAUSE values are reserved.	

QPCH_SUPPORTED – Quick Paging Channel supported indicator.

If $P\_REV\_IN\_USE_S$ is less than six, the mobile station shall omit this field; otherwise, the mobile station shall include this field and set it as follows.

If the mobile station supports the Quick Paging Channel, the mobile station shall set this field to '1'; otherwise, the mobile station shall set this field to '0'.

ENHANCED_RC – Enhanced radio configuration supported indicator.

If $P\_REV\_IN\_USE_S$ is less than six, the mobile station shall omit this field; otherwise, the mobile station shall include this field and set it as follows.

If the mobile station supports any radio configuration in the Radio Configuration Class 2 (see 1.1.1), the mobile station shall set this field to '1'; otherwise, the mobile station shall set this field to '0'.

UZID_INCL – User Zone Identifier included indicator.

If $P\_REV\_IN\_USE_S$ is less than six, the mobile station shall omit this field; otherwise, the mobile station shall include this field and set it as follows.

If the message is to contain the User Zone Identifier, the mobile station shall set this field to '1'; otherwise, the mobile station shall set this field to '0'.

UZID – User Zone Identifier.

If the UZID_INCL is included in the message and is set to '1', the mobile station shall include this field and set it to $UZID_S$; otherwise, the mobile station shall omit this field.

GEO_LOC_INCL – Geo-location included indicator.

If $P\_REV\_IN\_USE_S$ is less than seven, the mobile station shall omit this field; otherwise, the mobile station shall include this field and set it as follows.

If the message is to contain the GEO_LOC_TYPE field, the mobile station shall set this field to '1'; otherwise, the mobile station shall set this field to '0'.

GEO_LOC_TYPE – Geo-Location Type.

If GEO_LOC_INCL is included in the message and is set to '1', the mobile station shall include this field and shall set it to the value shown in Table 2.7.1.3.2.4-7; otherwise, the mobile station shall omit this field.

OTD_SUPPORTED – Orthogonal Transmit Diversity supported.

If $P\_REV\_IN\_USE_S$ is less than seven, the mobile station shall omit this field; otherwise, the mobile station shall include this field and set it as follows.

The mobile station shall set this field to '1' if Orthogonal Transmit Diversity is supported; otherwise, the mobile station shall set this field to '0'.

STS_SUPPORTED – Space Time Spreading Transmit Diversity supported.

If $P\_REV\_IN\_USE_S$ is less than seven, the mobile station shall omit this field; otherwise, the mobile station shall include this field and set it as follows.

The mobile station shall set this field to '1', if Space Time Spreading Transmit Diversity is supported; otherwise, the mobile station shall set this field to '0'.

3X_CCH_SUPPORTED – 3X Common Channels supported.

If $P\_REV\_IN\_USE_S$ is less than seven, the mobile station shall omit this field; otherwise, the mobile station shall include this field and set it as follows.

The mobile station shall set this field to '1' if the mobile station supports the Spreading Rate 3 common channels (3X BCCH, 3X F-CCCH, and 3X R-EACH); otherwise, the mobile station shall set this field to '0'.

WLL_INCL – WLL information included indicator.

If $P\_REV\_IN\_USE_S$ is less than seven, the mobile station shall omit this field; otherwise, the mobile station shall include this field and set it as follows.

If the mobile station is a Wireless Local Loop device, the mobile station shall set this field to '1'; otherwise, the mobile station shall set this field to '0'.

WLL_DEVICE_TYPE – WLL device type indicator.

If WLL_INCL is not included, or if WLL_INCL is included and is set to '0', the mobile station shall omit this field; otherwise, the mobile station shall set this field as follows.

The mobile station shall set this field to the WLL_DEVICE_TYPE value shown in Table 2.7.1.3.2.1-3 corresponding to the mobile station device type.

Table 2.7.1.3.2.1-3. WLL Device Types

WLL_DEVICE_TYPE (binary)	Description
000	Wireless Local Loop terminal with no mobility
001	Wireless Local Loop terminal with limited mobility
010	Wireless Local Loop terminal with full mobility
011 - 111	Reserved

HOOK_STATUS – WLL terminal hook status.

If WLL_INCL is not included, or if WLL_INCL is included and is set to '0', the mobile station shall omit this field; otherwise, the mobile station shall set this field to the value shown in Table 2.7.1.3.2.1-4 corresponding to the hook state.

Table 2.7.1.3.2.1-4. Hook Status Values

HOOK_STATUS (binary)	Description
0000	Subscriber terminal is on-hook
0001	Subscriber terminal is off-hook
0010	Subscriber terminal is stuck off-hook
0011 – 1111	Reserved

ENC_INFO_INCL – Encryption fields included.

If $P\_REV\_IN\_USE_S$ is less than seven, the mobile station shall omit this field; otherwise, the mobile station shall include this field and set it as follows.

The mobile station shall set this field to ‘1’ if the encryption related fields are included; otherwise the mobile station shall set this field to ‘0’. The mobile station shall set this field to ‘0’ if the base station does not support encryption or the mobile station does not support any of the encryption modes supported by the base station.

SIG_ENCRYPT_SUP – Signaling encryption supported indicator.

If ENC_INFO_INCL is included and is set to ‘1’, the mobile station shall include this field; otherwise, the mobile station shall omit this field. If this field is included, the mobile station shall set this field to indicate which signaling encryption algorithms are supported by the mobile station.

This field consists of the subfields shown in Table 2.7.1.3.2.1-5.

Table 2.7.1.3.2.1-5. Encoding of the SIG_ENCRYPT_SUP Field

Subfield	Length (bits)	Subfield Description
CMEA	1	Support of Cellular Message Encryption Algorithm
ECMEA	1	Support of Enhanced Cellular Message Encryption Algorithm
REA	1	Support of the Rijndael Encryption Algorithm
RESERVED	5	Reserved bits

If this field is included, the mobile station shall set the subfields as follows:

The mobile station shall set the CMEA subfield to ‘1’.

The mobile station shall set each other subfield to ‘1’ if the corresponding signaling encryption algorithm is supported by the mobile station; otherwise, the mobile station shall set the subfield to ‘0’.

The mobile station shall set the RESERVED subfield to ‘00000’.

C_SIG_ENCRYPT_REQ – Common Channel signaling message encryption request indicator.

If ENC_INFO_INCL is included and is set to ‘1’, the mobile station shall include this field; otherwise, the mobile station shall omit this field. If this field is included, the mobile station shall set this field to ‘1’ to request signaling encryption to be turned on for signaling messages sent on f-csch and r-csch, and to ‘0’ to request signaling encryption to be turned off for signaling messages sent on f-csch and r-csch.

NEW_SSEQ_H – The 24-bit value used to initialize the 24 MSB of the crypto-sync.

If SIG_ENCRYPT_SUP is included and the ECMEA or REA subfield in SIG_ENCRYPT_SUP is set to ‘1’, the mobile station shall include this field; otherwise, the mobile station shall omit this field. If this field is included, the mobile station shall set this field to a 24-bit value that will be used as the initial value of the 24 MSB of the crypto-sync for both forward and reverse link message encryption and integrity (if message integrity is performed).

NEW_SSEQ_H_SIG – The signature of NEW_SSEQ_H

If NEW_SSEQ_H is included, the mobile station shall include this field; otherwise, the mobile station shall omit this field. If this field is included, the mobile station shall set this field to the digital signature of the NEW_SSEQ_H computed as described in 2.3.12.4.5.

UI_ENCRYPT_SUP - User information encryption supported indicator.

If ENC_INFO_INCL is included and is set to '1', the mobile station shall include this field; otherwise, the mobile station shall omit this field. If this field is included, the mobile station shall set this field to indicate the supported user information encryption algorithms.

This field consists of the subfields shown in Table 2.7.1.3.2.4-9.

The mobile station shall set each subfield to '1' if the corresponding user information encryption algorithm is supported by the mobile station; otherwise, the mobile station shall set the subfield to '0'.

The mobile station shall set the RESERVED subfield to '000000'.

MSG_INT_INFO_INCL - Signaling message integrity information included indicator.

If $P\_REV\_IN\_USE_S$ is less than nine, the mobile station shall omit this field; otherwise, the mobile station shall include this field and set it as follows.

If $MSG\_INTEGRITY\_SUP_S$ is equal to '0', the mobile station shall set this field to '0'; otherwise, the mobile station shall set this field to '1'.

SIG_INTEGRITY_SUP_INCL - Signaling message integrity information included indicator.

If MSG_INT_INFO_INCL is included and is set to '1', the mobile station shall include this field and set it as follows; otherwise, the mobile station shall omit this field.

If the mobile station supports other integrity algorithm(s) in addition to the default integrity algorithm, the mobile station shall set this field to '1'; otherwise, the mobile station shall set this field to '0'.

SIG_INTEGRITY_SUP - Signaling integrity algorithm supported by the mobile station.

If SIG_INTEGRITY_SUP_INCL is included and is set to '1', the mobile station shall set this field as follows; otherwise, the mobile station shall omit this field.

The mobile station shall set this field to indicate the supported message integrity algorithms in addition to the default integrity algorithm.

This field consists of the subfields shown in Table 2.7.1.3.2.1-6.

The mobile station shall set each subfield to '1' if the corresponding message integrity algorithm is supported by the mobile station; otherwise, the mobile station shall set the subfield to '0'.

Table 2.7.1.3.2.1-6. Encoding of the SIG_INTEGRITY_SUP Field

Subfield	Length (bits)	Subfield Description
RESERVED	8	Reserved bits

The mobile station shall set the RESERVED subfield to '00000000'.

SIG_INTEGRITY_REQ - Signaling message integrity algorithm requested by the mobile station.

If SIG_INTEGRITY_SUP_INCL is included and is set to '1', the mobile station shall set this field as follows; otherwise, the mobile station shall omit this field.

The mobile station shall include this field and set it to the value corresponding to the message integrity algorithm requested as shown in Table 2.7.1.3.2.1-7.

Table 2.7.1.3.2.1-7. Encoding of the SIG_INTEGRITY_REQ Field

SIG_INTEGRITY_REQ	Value	Description
DEFAULT_UIA	'000'	Default message integrity algorithm
RESERVED	'001' – '111'	Reserved

NEW_KEY_ID - New key identifier.

If MSG_INT_INFO_INCL is included and is set to '1', the mobile station shall include this field and set it as follows; otherwise, the mobile station shall omit this field.

The mobile station shall set this field as follows:

- If LAST_2G_KEY_ID equals '00', the mobile station shall set this field to '01'.
- If LAST_2G_KEY_ID equals '01', the mobile station shall set this field to '00'.

NEW_SSEQ_H_INCL - The 24-bit value used to initialize the 24 MSB of crypto-sync.

If MSG_INT_INFO_INCL is included and is set to '1', the mobile station shall include this field and set it as follows; otherwise, the mobile station shall omit this field.

The mobile station shall set this field to '0' if any of the following is true:

- If SIG_ENCRYPT_SUP is included and the ECMEA or REA subfield in SIG_ENCRYPT_SUP is set to '1'
- RESTORE_KEYS is equal to '1'.

In all other cases, the mobile station shall set this field to '1'.

NEW_SSEQ_H - The 24-bit value used to initialize the 24 MSB of the crypto-sync.

If NEW_SSEQ_H_INCL is included and is set to '1', the mobile station shall include this field and set this field as follows; otherwise, the mobile station shall omit this field.

The mobile station shall set this field to a 24-bit value that will be used as the initial value of the 24 MSB of the crypto-sync for both forward and reverse link message integrity.

NEW_SSEQ_H_SIG - The signature of NEW_SSEQ_H

If NEW_SSEQ_H_INCL is included and is set to '1', the mobile station shall include this field and set this field as follows; otherwise, the mobile station shall omit this field.

The mobile station shall set this field to the digital signature of the NEW_SSEQ_H computed as described in 2.3.12.4.5.

SIGN_SLOT_CYCLE_INDEX – Sign of the slot cycle index.

If $P\_REV\_IN\_USE_S$ is less than 11, or if the SLOT_CYCLE_INDEX field is set to '000', the mobile station shall omit this field; otherwise, the mobile station shall include this field and set it as follows:

The mobile station shall set this field as specified in Table 2.7.1.3.2.1-8 to the sign of the preferred slot cycle index, $SLOT\_CYCLE\_INDEX_p$ (see 2.6.2.1.1). The absolute value of the preferred slot cycle index, $SLOT\_CYCLE\_INDEX_p$ is specified in the SLOT_CYCLE_INDEX field of this message.

Table 2.7.1.3.2.1-8. Slot Cycle Index Values

Slot Cycle Index Value	SIGN_SLOT_CYCLE_INDEX	SLOT_CYCLE_INDEX	RSCI, REQ_RSCI	Slot Cycle Length
-7	N/A	N/A	0111	Non-slotted
-4	0	100	0100	0.08s (1 slot)
-3	0	011	0011	0.16s (2 slots)
-2	0	010	0010	0.32s (4 slots)
-1	0	001	0001	0.64s (8 slots)
0	omitted	000	0000	1.28s (16 slots)
1	1	001	1001	2.56s (32 slots)
2	1	010	1010	5.12s (64 slots)
3	1	011	1011	10.24s (128 slots)
4	1	100	1100	20.48s (256 slots)
5	1	101	1101	40.96s (512 slots)
6	1	110	1110	81.92s (1024 slots)
7	1	111	N/A	163.84s (2048 slots)
All other values reserved.				

BCMC_FREQ_INFO_INCL- BCMC frequency information included indicator.

If the REG_TYPE field is not set to '1001', the mobile station shall omit this field; otherwise, the mobile station shall include this field and set it as follows:

If the BCMC band class and frequency fields are included in this message, the mobile station shall set this field to '1'; otherwise, the mobile station shall set this field to '0'.

If this Registration Message is being sent only to request transmission of BCMC flows, the mobile station shall set this field to '0'.

BCMC_BAND_CLASS- BCMC Band Class.

If the BCMC_FREQ_INFO_INCL field is not included or is included and is set to '0', the mobile station shall omit this field; otherwise, the mobile station shall include this field and set it as follows:

The mobile station shall set this field to the CDMA band class, as specified in [30], corresponding to the CDMA frequency assignment for the CDMA Channel containing the Forward Broadcast Supplemental Channel that the mobile station will tune to upon receiving confirmation of delivery of this message.

BCMC_CDMA_FREQ- BCMC Frequency.

If the BCMC_FREQ_INFO_INCL field is not included or is included and is set to '0', the mobile station shall omit this field; otherwise, the mobile station shall include this field and set it as follows:

The mobile station shall set this field to the CDMA Channel number corresponding to the CDMA frequency assignment for the CDMA Channel containing the Forward Broadcast Supplemental Channel that the mobile station will tune to upon receiving confirmation of delivery of this message.

NUM_BCMC_PROGRAMS – Number of BCMC programs being registered.

If the REG_TYPE field is not set to '1001', the mobile station shall omit this field; otherwise, the mobile station shall include this field and set it as follows:

The mobile station shall set this field to the number of BCMC programs included in this message.

AUTH_SIGNATURE_INCL - Authorization signature included indication.

If the REG_TYPE field is not set to '1001', the mobile station shall omit this field; otherwise, the mobile station shall include this field and set it as follows:

The mobile station shall set this field to '1' to indicate that the authorization signature is included in this message for some of the BCMC flows included in this message; otherwise, the mobile station shall set this field to '0'.

TIME_STAMP_SHORT_LENGTH - Length of time stamp included in this message.

If the AUTH_SIGNATURE_INCL field is not included or is included and is set to '0', the mobile station shall omit this field; otherwise, the mobile station shall include this field and set it as follows:

The mobile station shall set this field to the length of the time stamp, in units of bits, included in this message.

TIME_STAMP_SHORT - Time stamp short.

If the AUTH_SIGNATURE_INCL field is not included or is included and is set to '0', the mobile station shall omit this field; otherwise, the mobile station shall include this field and set it as follows:

The mobile station shall set this field to the TIME_STAMP_SHORT_LENGTH least significant bits of the time stamp parameter used to generate the Authorization signature included in this message.

The mobile station shall include NUM_BCMC_PROGRAMS occurrences of the following fields:

BCMC_PROGRAM_ID_LEN - Length of BCMC_PROGRAM_ID field

The mobile station shall set this field to one less than the length, in bits, of the BCMC_PROGRAM_ID of this program.

BCMC_PROGRAM_ID - BCMC program Identifier

The length of this field shall be one more than the value of BCMC_PROGRAM_ID_LEN bits.

The mobile station shall set this field to the identifier of the BCMC program corresponding to one or more flows that the mobile station will continue to monitor or start to monitor upon receiving confirmation of delivery of this message or is requesting transmission.

BCMC_FLOW_DISCRIMINATOR_LEN - Length of BCMC_FLOW_DISCRIMINATOR field

The mobile station shall set this field to the length, in bits, of the BCMC_FLOW_DISCRIMINATOR of this program. To request all flows associated with this BCMC_PROGRAM_ID, the mobile station may set this field to '000'.

NUM_FLOW_DISCRIMINATOR - Number of BCMC flow discriminators.

The length of this field shall be determined by the value of the BCMC_FLOW_DISCRIMINATOR_LEN as follows: if BCMC_FLOW_DISCRIMINATOR_LEN is set to '000', this field is omitted; otherwise, the length of this field shall be BCMC_FLOW_DISCRIMINATOR_LEN bits.

The mobile station shall set this field to the number of flow discriminators included for this program minus one.

If NUM_FLOW_DISCRIMINATOR field is included, the mobile station shall include NUM_FLOW_DISCRIMINATOR+1 occurrences of the following variable length record; otherwise, the mobile station shall include 1 occurrence of the following variable length record:

BCMC_FLOW_DISCRIMINATOR – BCMC Flow discriminator.

The length of this field shall be determined by the value of the BCMC_FLOW_DISCRIMINATOR_LEN as follows: if BCMC_FLOW_DISCRIMINATOR_LEN is set to '000', this field is omitted; otherwise, the length of this field shall be BCMC_FLOW_DISCRIMINATOR_LEN bits.

The mobile station shall set this field to the discriminator of the BCMC flow that the mobile station will continue to monitor or start to monitor upon receiving confirmation of delivery of this message or is requesting transmission.

AUTH_SIGNATURE_IND - Authorization signature indicator.

If the AUTH_SIGNATURE_INCL field is not included or is included and is set to '0', the mobile station shall omit this field; otherwise, the mobile station shall include this field and set it as follows:

The mobile station shall set this field to '1' to indicate that the authorization signature is included in this message for this BCMC flow; otherwise, the mobile station shall set this field to '0'.

AUTH_SIGNATURE_SAME_IND - Authorization signature same as previous BCMC flow indicator.

If the AUTH_SIGNATURE_IND field is not included or is included and is set to '0', the mobile station shall omit this field; otherwise, the mobile station shall include this field and set it as follows:

The mobile station shall set this field to '1' to indicate that the authorization signature generated for this BCMC flow is the same as the one generated for the BCMC flow listed prior to this BCMC flow in this message; otherwise, the mobile station shall set this field to '0'.

For the first BCMC flow listed in this message, the mobile station shall set this field to '0'.

BAK_ID - BAK identifier.

If the AUTH_SIGNATURE_SAME_IND field is not included or is included and is set to '1', the mobile station shall omit this field; otherwise, the mobile station shall include this field and set it as follows:

The mobile station shall set this field to BAK identifier used to generate the Authorization signature included in this message.

AUTH_SIGNATURE - Authorization signature.

If the AUTH_SIGNATURE_SAME_IND field is not included or is included and is set to '1', the mobile station shall omit this field; otherwise, the mobile station shall include this field and set it as follows:

The mobile station shall set this field to the Authorization signature computed for this BCMC flow as specified in 2.6.13.9.

BAND_SUB_REP_INCL – Band class – band subclass report included

If $P\_REV\_IN\_USE_S$ is less than eleven, the mobile station shall omit this field; otherwise, the mobile station shall include this field and set it as follows:

If $CAND\_BAND\_INFO\_REQ_S$ is equal to '1' and the mobile station supports at least 1 band class and band subclass (if applicable) combination queried by the base station, the mobile station shall set this field to '1'; otherwise, the mobile station shall set this field to '0'.

NUM_BAND_SUBCLASS – Number of band class - band subclass capabilities reported

If BAND_SUB_REP_INCL is set to '0' or is not included, this field shall be omitted; otherwise, the mobile station shall include this field and set it as follows:

If the mobile station supports all candidate band class and band subclass (if applicable) combinations queried by the base station, the mobile station shall set this field to '0000'; otherwise, the mobile station shall set this field to the number of band class-band subclass capabilities reported.

If the NUM_BAND_SUBCLASS field is included in this message, the mobile station shall include NUM_BAND_SUBCLASS occurrences of the BAND_SUBCLASS_SUP field:

BAND_SUBCLASS_SUP – Band class - Band subclass supported indicator

The mobile station shall set this field as specified in section 2.6.14.1.

ADD_GEO_LOC_INCL – Additional Geo-location included indicator.

If $P\_REV\_IN\_USE_S$ is less than twelve, the mobile station shall omit this field; otherwise, the mobile station shall include this field and set it as follows.

If the message is to contain the ADD_GEO_LOC_TYPE field, the mobile station shall set this field to '1'; otherwise, the mobile station shall set this field to '0'.

ADD_GEO_LOC_TYPE_LEN_IND – Additional Geo-Location Type Length Indicator.

If ADD_GEO_LOC_INCL is included in the message and is set to '1', the mobile station shall include this field and shall set it as described below; otherwise, the mobile station shall omit this field.

The mobile station shall set this field to '0' to indicate length of the ADD_GEO_LOC_TYPE field is 16 bits. The mobile station shall set this field to '1' to indicate length of the ADD_GEO_LOC_TYPE field is 24 bits.

ADD_GEO_LOC_TYPE – Additional Geo-Location Type.

If ADD_GEO_LOC_INCL is included in the message and is set to '1', the mobile station shall include this field and shall set it as described below; otherwise, the mobile station shall omit this field.

This field consists of the subfields shown in 2.7.4.46-1.

The mobile station shall set each subfield to '1' if the corresponding capability is supported by the mobile station; otherwise, the mobile station shall set the subfield to '0'.

2.7.1.3.2.2 Order Message

MSG_TAG: ORDM

Field	Length (bits)
ORDER	6
ADD_RECORD_LEN	3
Order-specific fields (if used)	8 × ADD_RECORD_LEN

ORDER – Order code.

The mobile station shall set this field to the ORDER code (see 2.7.3) for this type of *Order Message*.

ADD_RECORD_LEN – Additional record length.

The mobile station shall set this field to the number of octets in the order-specific fields included in this message.

order-specific fields – Order-specific fields.

The mobile station shall include order-specific fields as specified in 2.7.3.

2.7.1.3.2.3 Data Burst Message

MSG_TAG: DBM

Field	Length (bits)
MSG_NUMBER	8
BURST_TYPE	6
NUM_MSGS	8
NUM_FIELDS	8
NUM_FIELDS occurrences of the following field:	
{ (NUM_FIELDS)	
CHARi	8
} (NUM_FIELDS)	

MSG_NUMBER – Message number within the data burst stream.

The mobile station shall set this field to the number of this message within the data burst stream.

BURST_TYPE – Data burst type.

The mobile station shall set the value of this field for the type of this data burst as defined in [30]. If the mobile station sets this field equal to '111110', it shall set the first two CHARi fields of this message equal to EXTENDED_BURST_TYPE_INTERNATIONAL as described in the definition of CHARi below. If the mobile station sets this field equal to '111111', it shall set the first two CHARi fields of this message equal to the EXTENDED_BURST_TYPE as described in the definition of CHARi below.

NUM_MSGS – Number of messages in the data burst stream.

The mobile station shall set this field to the number of messages within this data burst stream.

NUM_FIELDS – Number of characters in this message.

The mobile station shall set this field to the number of CHARi fields included in this message.

CHARi – Character.

The mobile station shall include NUM_FIELDS occurrences of this field. The mobile station shall set these fields to the corresponding octet of the data burst stream.

If the BURST_TYPE field of this message is equal to '111110', the first two CHARi octets shall represent a 16 bit EXTENDED_BURST_TYPE_INTERNATIONAL field, which is encoded as shown below. The first ten bits of this field contain a binary mapping of the Mobile Country Code (MCC). Encoding of the MCC shall be as specified in 2.3.1.3. The remaining six bits of the EXTENDED_BURST_TYPE_INTERNATIONAL field shall specify the COUNTRY_BURST_TYPE. The mobile station shall set the value of the COUNTRY_BURST_TYPE according to the type of this data burst as defined in standards governed by the country where this data burst type is to be used.

Field	**Length (bits)**
Mobile Country Code	10
COUNTRY_BURST_TYPE	6
Remaining CHARi fields	8 × (NUM_FIELDS - 2)

If the BURST_TYPE field of this message is equal to '111111', the first two CHARi octets shall represent a single, 16 bit, EXTENDED_BURST_TYPE field, as shown below. The mobile station shall set the value of the EXTENDED_BURST_TYPE according to the type of this data burst as defined in [30].

Field	**Length (bits)**
EXTENDED_BURST_TYPE (first two CHARi fields)	16
Remaining CHARi fields	8 × (NUM_FIELDS - 2)

2.7.1.3.2.4 Origination Message

MSG_TAG: ORM

Field	Length (bits)
MOB_TERM	1
SLOT_CYCLE_INDEX	3
MOB_P_REV	8
SCM	8
REQUEST_MODE	3
SPECIAL_SERVICE	1
SERVICE_OPTION	0 or 16
PM	1
DIGIT_MODE	1
NUMBER_TYPE	0 or 3
NUMBER_PLAN	0 or 4
MORE_FIELDS	1
NUM_FIELDS	8

NUM_FIELDS occurrences of the following field:

{ (NUM_FIELDS)

CHARi	4 or 8

} (NUM_FIELDS)

NAR_AN_CAP	1
PACA_REORIG	1
RETURN_CAUSE	4
MORE_RECORDS	1
ENCRYPTION_SUPPORTED	0 or 4
PACA_SUPPORTED	1
NUM_ALT_SO	3

NUM_ALT_SO occurrences of the following field:

{ (NUM_ALT_SO)

ALT_SO	16

} (NUM_ALT_SO)

(continues on next page)

Field	Length (bits)
DRS	0 or 1
UZID_INCL	0 or 1
UZID	0 or 16
CH_IND	0 or 2
SR_ID	0 or 3
OTD_SUPPORTED	0 or 1
QPCH_SUPPORTED	0 or 1
ENHANCED_RC	0 or 1
FOR_RC_PREF	0 or 5
REV_RC_PREF	0 or 5
FCH_SUPPORTED	0 or 1
FCH Capability Type-specific fields	0 or variable
DCCH_SUPPORTED	0 or 1
DCCH Capability Type-specific fields	0 or variable
GEO_LOC_INCL	0 or 1
GEO_LOC_TYPE	0 or 3
REV_FCH_GATING_REQ	0 or 1
ORIG_REASON	0 or 1
ORIG_COUNT	0 or 2
STS_SUPPORTED	0 or 1
3X_CCH_SUPPORTED	0 or 1
WLL_INCL	0 or 1
WLL_DEVICE_TYPE	0 or 3
GLOBAL_EMERGENCY_CALL	0 or 1
MS_INIT_POS_LOC_IND	0 or 1
QOS_PARMS_INCL	0 or 1
QOS_PARMS_LEN	0 or 5

(continues on next page)

Field	Length (bits)
QOS_PARMS	0 or variable
QOS_RESERVED	0 - 7
ENC_INFO_INCL	0 or 1
SIG_ENCRYPT_SUP	0 or 8
D_SIG_ENCRYPT_REQ	0 or 1
C_SIG_ENCRYPT_REQ	0 or 1
NEW_SSEQ_H	0 or 24
NEW_SSEQ_H_SIG	0 or 8
UI_ENCRYPT_REQ	0 or 1
UI_ENCRYPT_SUP	0 or 8
SYNC_ID_INCL	0 or 1
SYNC_ID_LEN	0 or 4
SYNC_ID	0 or (8 × SYNC_ID_LEN)
PREV_SID_INCL	0 or 1
PREV_SID	0 or 15
PREV_NID_INCL	0 or 1
PREV_NID	0 or 16
PREV_PZID_INCL	0 or 1
PREV_PZID	0 or 8
SO_BITMAP_IND	0 or 2
SO_GROUP_NUM	0 or 5
SO_BITMAP	0 or 2^(1+ SO_BITMAP_IND)
SDB_DESIRED_ONLY	0 or 1
ALT_BAND_CLASS_SUP	0 or 1
MSG_INT_INFO_INCL	0 or 1
SIG_INTEGRITY_SUP_INCL	0 or 1

(continues on next page)

1

Field	Length (bits)
SIG_INTEGRITY_SUP	0 or 8
SIG_INTEGRITY_REQ	0 or 3
NEW_KEY_ID	0 or 2
NEW_SSEQ_H_INCL	0 or 1
NEW_SSEQ_H	0 or 24
NEW_SSEQ_H_SIG	0 or 8
FOR_PDCH_SUPPORTED	0 or 1
FOR_PDCH Capability Type-specific fields	0 or variable
EXT_CH_IND	0 or 5
SIGN_SLOT_CYCLE_INDEX	0 or 1
ADD_SERV_INSTANCE_INCL	0 or 1
NUM_ADD_SERV_INSTANCE	0 or 3

NUM_ADD_SERV_INSTANCE occurrences of the following record:

{ (NUM_ADD_SERV_INSTANCE)

ADD_SR_ID	3
ADD_DRS	1
ADD_SERVICE_OPTION_INCL	0 or 1
ADD_SERVICE_OPTION	0 or 16
ADD_QOS_PARMS_INCL	0 or 1
ADD_QOS_PARMS_LEN	0 or 5
ADD_QOS_PARMS	0 or variable
ADD_QOS_RESERVED	0 to 7 (as needed)

} (NUM_ADD_SERV_INSTANCE)

BCMC_INCL	0 or 1
BCMC_ORIG_ONLY_IND	0 or 1
FUNDICATED_BCMC_SUPPORTED	0 or 1
FUNDICATED_BCMC Capability Type-specific fields	0 or variable
AUTH_SIGNATURE_INCL	0 or 1
TIME_STAMP_SHORT_LENGTH	0 or 8
TIME_STAMP_SHORT	0 or Variable

Field	Length (bits)
NUM_BCMC_PROGRAMS	0 or 3

NUM_BCMC_PROGRAMS+1 occurrences of the following variable length record:

{ (NUM_BCMC_PROGRAMS+1)

BCMC_PROGRAM_ID_LEN	5
BCMC_PROGRAM_ID	Variable (Value of BCMC_PROGRAM_ID _LEN + 1)
BCMC_FLOW_DISCRIMINATOR_ LEN	3
NUM_FLOW_DISCRIMINATOR	BCMC_FLOW_DISCR IMINATOR_LEN

NUM_FLOW_DISCRIMINATOR+1 or 1 occurrences of the following variable length record:

{ (NUM_FLOW_DISCRIMINATOR+1) or 1

BCMC_FLOW_DISCRIMINATOR	BCMC_FLOW_DISCRIM INATOR_LEN
AUTH_SIGNATURE_IND	0 or 1
AUTH_SIGNATURE_SAME_IND	0 or 1
BAK_ID	0 or 4
AUTH_SIGNATURE	0 or 32

} (NUM_FLOW_DISCRIMINATOR+1) or 1

} (NUM_BCMC_PROGRAMS+1)

REV_PDCH_SUPPORTED	0 or 1
REV_PDCH Capability Type-specific fields	0 or variable
BAND_SUB_REP_INCL	0 or 1
NUM_BAND_SUBCLASS	0 or 4

(continues on next page)

Field	Length (bits)
NUM_BAND_SUBCLASS occurrences of the following field:	
{ (NUM_BAND_SUBCLASS)	
BAND_SUBCLASS_SUP	1
} (NUM_BAND_SUBCLASS)	
ADD_GEO_LOC_INCL	0 or 1
ADD_GEO_LOC_TYPE_LEN_IND	0 or 1
ADD_GEO_LOC_TYPE	0 or 16 or 24

MOB_TERM – Mobile terminated calls accepted indicator.

If the mobile station is configured to accept mobile terminated calls while operating with the current roaming status (see 2.6.5.3), the mobile station shall set this bit to '1'; otherwise, the mobile station shall set this bit to '0'.

SLOT_CYCLE_INDEX – Slot cycle index.

If $P\_REV\_IN\_USE_S$ is less than 11, or if MIN_SLOT_CYCLE_INDEX is equal to '0', the mobile station shall perform the following:

- If the mobile station is configured for slotted mode operation, the mobile station shall set this field to max (0, $SLOT\_CYCLE\_INDEX_p$) (see 2.6.2.1.1). Otherwise, the mobile station shall set this field to '000'.

Otherwise, the mobile station shall perform the following:

- If the mobile station is configured for slotted mode operation, the mobile station shall set this field to the absolute value of the preferred slot cycle index, $SLOT\_CYCLE\_INDEX_p$ (see 2.6.2.1.1); otherwise, the mobile station shall set this field to '000'. The sign of the preferred slot cycle index, $SLOT\_CYCLE\_INDEX_p$, is specified in the SIGN_SLOT_CYCLE_INDEX field of this message (see Table 2.7.1.3.2.1-8).

MOB_P_REV – Protocol revision of the mobile station.

The mobile station shall set this field to '00001100'.

SCM – Station class mark.

The mobile station shall set this field to the station class mark of the mobile station. See 2.3.3.

REQUEST_MODE – Requested mode code.

The mobile station shall set this field to the value shown in Table 2.7.1.3.2.4-1 corresponding to its current configuration.

Table 2.7.1.3.2.4-1. REQUEST_MODE Codes

Value (binary)	Requested Mode
000	Reserved
001	CDMA only
010	Reserved (Previously: Wide analog only)
011	Reserved (Previously: Either wide analog or CDMA only)
100	Reserved (Previously: Narrow analog only)
101	Reserved (Previously: Either narrow analog or CDMA only)
110	Reserved (Previously: Either narrow analog or wide analog only)
111	Reserved (Previously: Narrow analog or wide analog or CDMA)

SPECIAL_SERVICE – Special service option indicator.

To request a special service option, the mobile station shall set this field to ‘1’. To request the default service option (Service Option 1), the mobile station shall set this field to ‘0’.

SERVICE_OPTION – Requested service option for this origination.

If the SPECIAL_SERVICE field is set to ‘1’, the mobile station shall set this field to the value specified in [30], corresponding to the requested service option. If the SPECIAL_SERVICE field is set to ‘0’, the mobile station shall omit this field.

PM – Privacy mode indicator.

To request voice privacy, the mobile station shall set this field to ‘1’; otherwise, the mobile station shall set this field to ‘0’.

DIGIT_MODE – Digit mode indicator.

This field indicates whether the dialed digits are 4-bit DTMF codes or 8-bit ASCII codes using a specified numbering plan.

To originate the call using the binary representation of DTMF digits (i.e., CHARi fields are represented in Table 2.7.1.3.2.4-4), the mobile station shall set this field to ‘0’. To originate the call using ASCII characters, the mobile station shall set this field to ‘1’.

NUMBER_TYPE – Type of number.

The mobile station shall set this field to the NUMBER_TYPE value shown in Table 2.7.1.3.2.4-2 corresponding to the type of the number as defined in [7], Section 4.5.9. If the DIGIT_MODE field is set to '0' and $P\_REV\_IN\_USE_S$ is less than 11, the mobile station shall omit this field.

If this field is included and the mobile station determines that the user has entered an international number (for example, with a leading "+" as specified in [39] for Plus Code Dialing or an international access code), the mobile station should set this field to '001'.

Table 2.7.1.3.2.4-2. Number Types

Description	**NUMBER_TYPE (binary)**
Unknown	000
International number	001
National number	010
Network-specific number	011
Subscriber number	100
Reserved	101
Abbreviated number	110
Reserved for extension	111

NUMBER_PLAN – Numbering plan.

If the DIGIT_MODE field is set to '1', the mobile station shall set this field to the NUMBER_PLAN value shown in Table 2.7.1.3.2.4-3 corresponding to the requested numbering plan as defined in [7], Section 4.5.9. If the DIGIT_MODE field is set to '0', the mobile station shall omit this field.

Table 2.7.1.3.2.4-3. Numbering Plan Identification

Description	NUMBER_PLAN (binary)
Unknown	0000
ISDN/Telephony numbering plan ([17] and [16])	0001
Data numbering plan ([20])	0011
Telex numbering plan ([19])	0100
Private numbering plan	1001
Reserved for extension	1111
All other NUMBER_PLAN codes are reserved.	

MORE_FIELDS – More dialed digits indicator.

This field indicates whether additional dialed digits will be sent in a later *Origination Continuation Message*.

If all dialed digits will fit into this message, the mobile station shall set this field to ‘0’. If not, the mobile station shall set this field to ‘1’.

NUM_FIELDS – Number of dialed digits in this message.

The mobile station shall set this field to the number of dialed digits included in this message.

CHARi – A dialed digit or character.

The mobile station shall include NUM_FIELDS occurrences of this field. If the DIGIT_MODE field is set to ‘0’, the mobile station shall set each occurrence of this field to the code value shown in Table 2.7.1.3.2.4-4 corresponding to the dialed digit. If the DIGIT_MODE field is set to ‘1’, the mobile station shall set each occurrence of this field to the ASCII representation corresponding to the dialed digit, as specified in [9], with the most significant bit set to ‘0’.

Table 2.7.1.3.2.4-4. Representation of DTMF Digits

Digit	Code (binary)	Digit	Code (binary)
1	0001	7	0111
2	0010	8	1000
3	0011	9	1001
4	0100	0	1010
5	0101	*	1011
6	0110	#	1100
All other codes are reserved.			

NAR_AN_CAP – Narrow analog capability.

If the mobile station is capable of narrow analog operation, the mobile station shall set this bit to '1'; otherwise, the mobile station shall set this bit to '0'. The mobile station shall set this bit to '0'.

PACA_REORIG – PACA re-origination.

If this is a user directed origination, the mobile station shall set this field to '0'. If this is a PACA re-origination, the mobile station shall set this field to '1'.

RETURN_CAUSE – Reason for the mobile station registration or access.

The mobile station shall set this field to the RETURN_CAUSE value shown in Table 2.7.1.3.2.1-2 corresponding to the service redirection failure condition (see 2.6.1.1).

MORE_RECORDS – More records indicator.

This field indicates whether information records will be sent in a later *Origination Continuation Message*. If information records will be sent, the mobile station shall set this field to '1'; otherwise, the mobile station shall set this field to '0'.

ENCRYPTION_SUPPORTED – Encryption algorithms supported by the mobile station.

If $P\_REV\_IN\_USE_S$ is greater than or equal to seven or AUTH_MODE is equal to '00', the mobile station shall omit the ENCRYPTION_SUPPORTED field. If $P\_REV\_IN\_USE_S$ is less than seven and AUTH_MODE is not equal to '00', the mobile station shall set this field as specified in Table 2.7.1.3.2.4-5.

Table 2.7.1.3.2.4-5. Encryption Algorithms Supported

Description	ENCRYPTION_SUPPORTED (binary)
Basic encryption supported	0000
Basic and Enhanced encryption supported	0001
Reserved	0010 - 1111

PACA_SUPPORTED – CDMA PACA support indication.

This field identifies the mobile station's support for PACA in CDMA mode. The mobile station shall set this field to '1'.

NUM_ALT_SO – Number of alternative service options.

If $P\_REV\_IN\_USE_S$ is less than seven, the mobile station shall set this field to the number of alternative service options it supports other than the one specified in the SERVICE_OPTION field. The mobile station shall set this field to a value less than or equal to $MAX\_NUM\_ALT\_SO_S$.

If $P\_REV\_IN\_USE_S$ is equal to or greater than seven, the mobile station shall set this field to the number of alternate service options, which either have no service option group number assigned or do not belong to the same service option group whose bitmap is being included. The alternate service option numbers are other than the one specified in the SERVICE_OPTION field. The mobile station shall set this field to a value less than or equal to $MAX\_NUM\_ALT\_SO_S$.

ALT_SO – Alternative service option.

If $P\_REV\_IN\_USE_S$ is less than 7, the mobile station shall include NUM_ALT_SO occurrences of this field. The mobile station shall set this field to the value specified in [30], corresponding to the alternative service option supported by the mobile station.

If $P\_REV\_IN\_USE_S$ is equal to or greater than seven, the mobile station shall include NUM_ALT_SO occurrences of this field. The mobile station shall set this field to the service option number defined in [30] corresponding to the alternate service options which either have no service option group number assigned or do not belong to the same service option group whose bitmap is included in this message.

DRS – Data Ready to Send.

If $P\_REV\_IN\_USE_S$ is less than six, the mobile station shall omit this field; otherwise, the mobile station shall include this field and set it as follows.

If the service instance corresponding to SR_ID has data to send, the mobile station shall set this field to '1'; otherwise, the mobile station shall set this field to '0'.

UZID_INCL – User Zone Identifier included indicator.

If $P\_REV\_IN\_USE_S$ is less than six, the mobile station shall omit this field; otherwise, the mobile station shall include this field and set it as follows.

If the message is to contain the User Zone Identifier, the mobile station shall set this field to '1'; otherwise, the mobile station shall set this field to '0'.

UZID – User Zone Identifier.

If the UZID_INCL field is included in the message and is set to '1', the mobile station shall include this field and set it to $UZID_S$; otherwise, the mobile station shall omit this field.

CH_IND – Channel indicator.

If $P\_REV\_IN\_USE_S$ is less than six, the mobile station shall omit this field; otherwise, the mobile station shall include this field and set it, as shown in Table 2.7.1.3.2.4-6, to request physical resources.

Table 2.7.1.3.2.4-6. Channel Indicator

CH_IND (binary)	Channel(s) Requested
00	Refer to EXT_CH_IND
01	Fundamental Channel
10	Dedicated Control Channel
11	Fundamental Channel and Dedicated Control Channel

SR_ID – Service reference identifier.

If $P\_REV\_IN\_USE_S$ is less than six, the mobile station shall omit this field; otherwise, the mobile station shall include this field and set it as follows:

If the SYNC_ID_INCL field is not included or is included and is set to ‘0’, the mobile station shall set this field as follows:

- If the service instance provides a service reference identifier, the mobile station shall set this field to the service reference identifier specified by the service instance. If the service instance does not provide a service reference identifier, the mobile station shall set this field to the smallest unused service reference identifier value between 1 and 6 (inclusive).

Otherwise, the mobile station shall set this field as follows:

- If the mobile station requests the restoration of a single service option connection from the stored service configuration, the mobile station shall set this field to the corresponding service reference identifier.

- If the mobile station requests the restoration of more than one but not all service option connections from the stored service configuration, the mobile station shall set this field to the service reference identifier corresponding to one of the service option connections to be restored.

- Otherwise (that is, the mobile station requests the restoration of all the service option connections from the stored service configuration), the mobile station shall set this field to ‘111’.

OTD_SUPPORTED – Orthogonal Transmit Diversity supported indicator.

If $P\_REV\_IN\_USE_S$ is less than six, the mobile station shall omit this field; otherwise, the mobile station shall include this field and set it as follows.

If the mobile station supports orthogonal transmit diversity, it shall set this field to ‘1’; otherwise, the mobile station shall set this field to ‘0’.

QPCH_SUPPORTED – Quick Paging Channel supported indicator.

If $P\_REV\_IN\_USE_S$ is less than six, the mobile station shall omit this field; otherwise, the mobile station shall include this field and set it as follows.

If the mobile station supports the Quick Paging Channel, the mobile station shall set this field to '1'; otherwise, the mobile station shall set this field to '0'.

ENHANCED_RC – Enhanced radio configuration supported indicator.

If $P\_REV\_IN\_USE_S$ is less than six, the mobile station shall omit this field; otherwise, the mobile station shall include this field and set it as follows.

If the mobile station supports any radio configuration in the Radio Configuration Class 2 (see 1.1.1), the mobile station shall set this field to '1'; otherwise, the mobile station shall set this field to '0'.

FOR_RC_PREF – Forward Radio Configuration preference.

If $P\_REV\_IN\_USE_S$ is less than six, the mobile station shall omit this field; otherwise, the mobile station shall include this field and set this field as follows.

The mobile station shall set this field to its preferred Radio Configuration for the Forward Fundamental Channel and/or Forward Dedicated Control Channel.

REV_RC_PREF – Reverse Radio Configuration Preference.

If $P\_REV\_IN\_USE_S$ is less than six, the mobile station shall omit this field; otherwise, the mobile station shall include this field and set it as follows.

The mobile station shall set this field to its preferred Radio Configuration for the Reverse Fundamental Channel and/or Reverse Dedicated Control Channel.

FCH_SUPPORTED – Fundamental Channel supported indicator.

If $P\_REV\_IN\_USE_S$ is less than six, the mobile station shall omit this field; otherwise, the mobile station shall include this field and set it as follows.

The mobile station shall set this field to '1' if the mobile station supports Fundamental Channel; otherwise, the mobile station shall set this field to '0'.

FCH Capability

Type-specific fields – Fundamental Channel capability information.

If the FCH_SUPPORTED field is included and is set to '1', the mobile station shall include this field and set it as defined in 2.7.4.27.1; otherwise, the mobile station shall omit this field.

DCCH_SUPPORTED – Dedicated Control Channel supported indicator.

If $P\_REV\_IN\_USE_S$ is less than six, the mobile station shall omit this field; otherwise the mobile station shall include this field and set it as follows.

The mobile station shall set this field to '1' if the mobile station supports Dedicated Control Channel; otherwise, the mobile station shall set this field to '0'.

DCCH Capability

Type specific fields – Dedicated Control Channel capability information.

If the DCCH_SUPPORTED field is included and is set to '1', the mobile station shall include this field and set it as defined in 2.7.4.27.2; otherwise, the mobile station shall omit this field.

GEO_LOC_INCL – Geo-location included indicator.

If $P\_REV\_IN\_USE_S$ is less than six, the mobile station shall omit this field. If $P\_REV\_IN\_USE_S$ is equal to six, the mobile station shall set this field to '0'. Otherwise, the mobile station shall include this field and set it as follows.

If the message is to contain the GEO_LOC_TYPE field, the mobile station shall set this field to '1'; otherwise, the mobile station shall set this field to '0'.

GEO_LOC_TYPE – Geo-Location Type.

If GEO_LOC_INCL is included in the message and is set to '1', the mobile station shall include this field and shall set it to the value shown in Table 2.7.1.3.2.4-7; otherwise, the mobile station shall omit this field.

Table 2.7.1.3.2.4-7. Geo-location Types

GEO_LOC_TYPE (binary)	Type of Geo-location
000	No mobile station assisted geo-location capabilities
001	IS-801 capable (Advanced Forward Link Triangulation only (AFLT))
010	IS-801 capable (Advanced Forward Link Triangulation and Global Positioning Systems)
011	Global Positioning Systems only
All other GEO_LOC_TYPE values are reserved.	

REV_FCH_GATING_REQ – Reverse Fundamental Channel eighth gating mode request indicator.

If $P\_REV\_IN\_USE_S$ is less than six, the mobile station shall omit this field; otherwise, the mobile station shall include this field and set it as follows:

If the mobile station requests to turn on the reverse Fundamental Traffic Channel gating mode in Radio Configurations 3, 4, 5, and 6, the mobile station shall set this field to '1'; otherwise, the mobile station shall set this field to '0'.

ORIG_REASON - Re-Origination reason indicator.

If $P\_REV\_IN\_USE_S$ is less than or equal to six, the mobile station shall omit this field; otherwise, the mobile station shall include this field and set it as follows.

The mobile station shall set this field to '1' if the mobile station initiates a silent-retry, i.e. an autonomous access re-attempt to re-originate this call without user interaction, after the mobile station received an access attempt failure from the ARQ Sublayer for a user initiated origination; otherwise, the mobile station shall set this field to '0'.

ORIG_COUNT - Re-Origination count.

If $P\_REV\_IN\_USE_S$ is less than or equal to six, the mobile station shall omit this field; otherwise, the mobile station shall include this field and set it as follows.

If the ORIG_REASON is set to '1', the mobile station shall set this field to the number of consecutive silent-retry, i.e. an autonomous access re-attempt that were made to re-originate the call, without user interaction, that were due to the mobile receiving an access attempt failure from the ARQ Sublayer. If the number of consecutive silent-retry is greater than three, the mobile station shall set this field to '11'.

If the ORIG_REASON is set to '0', the mobile station shall set this field according to Table 2.7.1.3.2.4–8 depending on the number of autonomous re-connection attempts for the desired service (specified by SERVICE_OPTION) that have failed since the last successful connection of that desired service[2]. The count shall only include attempts since the last power-up.

Table 2.7.1.3.2.4-8. ORIG_COUNT field for ORIG_REASON = '0'

Number of autonomous re-origination attempts for the desired service that have failed since the last successful connection	**ORIG_COUNT (binary)**
0	'00'
1, 2, 3 or 4	'01'
5, 6, 7 or 8	'10'
9 or more	'11'

STS_SUPPORTED – STS supported indicator.

[2] For example, if the mobile station requests SO_X in the *Origination Message* and SO_Y is granted by the base station, the counter associated with SO_X is reset.

If $P\_REV\_IN\_USE_S$ is less than seven, the mobile station shall omit this field; otherwise, the mobile station shall include this field and set it as follows.

The mobile station shall set this field to '1' if the mobile station supports Space Time Spreading Transmit Diversity; otherwise, the mobile station shall set this field to '0'.

3X_CCH_SUPPORTED – 3X Common Channels supported.

If $P\_REV\_IN\_USE_S$ is less than seven, the mobile station shall omit this field; otherwise, the mobile station shall include this field and set it as follows.

The mobile station shall set this field to '1' if the mobile station supports the Spreading Rate 3 common channels (3X BCCH, 3X F-CCCH, and 3X R-EACH); otherwise, the mobile station shall set this field to '0'.

WLL_INCL – WLL information included indicator.

If $P\_REV\_IN\_USE_S$ is less than seven, the mobile station shall omit this field; otherwise, the mobile station shall include this field and set it as follows.

If the mobile station is a Wireless Local Loop device, the mobile station shall set this field to '1'; otherwise, the mobile station shall set this field to '0'.

WLL_DEVICE_TYPE – WLL device type indicator.

If WLL_INCL is not included, or if WLL_INCL is included and is set to '0', the mobile station shall omit this field; otherwise, the mobile station shall set this field as follows.

The mobile station shall set this field to the WLL_DEVICE_TYPE value shown in Table 2.7.1.3.2.1-3 corresponding to the mobile station device type.

GLOBAL_EMERGENCY_CALL – Global Emergency Call indicator.

If $P\_REV\_IN\_USE_S$ is less than seven, the mobile station shall omit this field; otherwise, the mobile station shall include this field and shall set it as follows:

The mobile station shall set this field to '1' if the mobile station recognizes that this is an emergency call; otherwise, the mobile station shall set this field to '0'.

MS_INIT_POS_LOC_IND – Mobile Initiated Position Location Session indicator.

If the GLOBAL_EMERGENCY_CALL field is not included in this message or is included but is set to '0', the mobile station shall omit this field; otherwise, the mobile station shall include this field and shall set it as follows:

The mobile station shall set this field to '1' if $MS\_INIT\_POS\_LOC\_SUP\_IND_S$ is equal to '1' and if the mobile station is to initiate a position location session associated with this emergency call; otherwise, the mobile station shall set this field to '0'.

QOS_PARMS_INCL - Presence indicator for the QoS parameters.

If $P\_REV\_IN\_USE_S$ is less than seven, the mobile station shall omit this field; otherwise the mobile station shall include this field and set it as follows.

The mobile station shall set this field to '1', if QoS parameters are included in the message for the service instance corresponding to SR_ID; otherwise the mobile station shall set this field to '0'. The mobile station shall not set this field to '1', if MOB_QOS_S is set to '0' or if the inclusion of the QoS parameters would prevent the inclusion of all the dialed digits in the message.

QOS_PARMS_LEN - Length of the block of QoS parameters.

If QOS_PARMS_INCL is included and is set to '1', the mobile station shall include this field; otherwise, the mobile station shall omit this field. If this field is included, the mobile station shall set this field to the combined length in octets, of the QOS_PARMS field and the immediately following QOS_RESERVED field.

QOS_PARMS - QoS parameters block.

If QOS_PARMS_INCL is included and is set to '1', the mobile station shall include this field; otherwise, the mobile station shall omit this field. If this field is included, the mobile station shall set it to the set of QoS parameter values as defined in accordance with the requirements for the requested service option and/or for the user, per subscription.

QOS_RESERVED - QoS reserved bits.

If QOS_PARMS_INCL is included and is set to '1', the mobile station shall include the minimum number of bits of '0', such that the combined length of the QOS_PARMS field and of this field is an integer number of octets; otherwise, the mobile station shall omit this field.

ENC_INFO_INCL – Encryption fields included.

If $P\_REV\_IN\_USE_S$ is less than seven, the mobile station shall omit this field; otherwise, the mobile station shall include this field and set it as follows.

The mobile station shall set this field to '1' if the encryption related fields are included; otherwise the mobile station shall set this field to '0'. The mobile station shall set this field to '0' if the base station does not support encryption or the mobile station does not support any of the encryption modes supported by the base station.

SIG_ENCRYPT_SUP – Signaling encryption supported indicator.

If ENC_INFO_INCL is included and is set to '1', the mobile station shall include this field; otherwise, the mobile station shall omit this field. If this field is included, this field indicates which signaling encryption algorithms are supported by the mobile station.

This field consists of the subfields shown in Table 2.7.1.3.2.1-5.

If this field is included, the mobile station shall set the subfields as follows:

The mobile station shall set the CMEA subfield to '1'.

The mobile station shall set each other subfield to '1' if the corresponding signaling encryption algorithm is supported by the mobile station; otherwise, the mobile station shall set the subfield to '0'.

The mobile station shall set the RESERVED subfield to '00000'.

D_SIG_ENCRYPT_REQ – Dedicated channel signaling encryption request indicator.

If ENC_INFO_INCL is included and is set to '1', the mobile station shall include this field; otherwise, the mobile station shall omit this field. If this field is included, the mobile station shall set this field to '1' to request signaling encryption to be turned on for signaling messages sent on f-dsch and r-dsch, and to '0' to request signaling encryption to be turned off for signaling messages sent on f-dsch and r-dsch.

C_SIG_ENCRYPT_REQ – Common channel signaling encryption request indicator.

If ENC_INFO_INCL is included and is set to '1', the mobile station shall include this field; otherwise, the mobile station shall omit this field. If this field is included, the mobile station shall set this field to '1' to request signaling encryption to be turned on for signaling messages sent on f-csch and r-csch, and to '0' to request signaling encryption to be turned off for signaling messages sent on f-csch and r-csch.

NEW_SSEQ_H – The 24-bit value used to initialize the 24 MSB of the crypto-sync.

If SIG_ENCRYPT_SUP is included and the ECMEA or REA subfield in SIG_ENCRYPT_SUP is set to ‘1’, the mobile station shall include this field; otherwise, the mobile station shall omit this field. If this field is included, the mobile station shall set this field to a 24-bit value that will be used as the initial value of the 24 MSB of the crypto-sync for both forward and reverse link message encryption and integrity (if message integrity is performed).

NEW_SSEQ_H_SIG - The signature of NEW_SSEQ_H

If NEW_SSEQ_H is included, the mobile station shall include this field; otherwise, the mobile station shall omit this field. If this field is included, the mobile station shall set this field to the digital signature of the NEW_SSEQ_H as described in 2.3.12.4.5.

UI_ENCRYPT_REQ – Request for user information encryption on the traffic channel indicator.

If ENC_INFO_INCL is included and is set to ‘1’, the mobile station shall include this field; otherwise, the mobile station shall omit this field. If this field is included, the mobile station shall set this field to ‘1’ to request user information encryption, and to ‘0’ to request no user information encryption.

UI_ENCRYPT_SUP – User information encryption supported indicator.

If ENC_INFO_INCL is included and is set to ‘1’, the mobile station shall include this field; otherwise, the mobile station shall omit this field. If this field is included, the mobile station shall set this field to indicate the supported user information encryption algorithms.

This field consists of the subfields shown in Table 2.7.1.3.2.4-9.

Table 2.7.1.3.2.4-9. Encoding of the UI_ENCRYPT_SUP Field

Subfield	Length (bits)	Subfield Description
ORYX	1	Support for ORYX encryption algorithm
REA	1	Support for the Rijndael encryption algorithm used in extended encryption
RESERVED	6	Reserved bits

The mobile station shall set each subfield to '1' if the corresponding user information encryption algorithm is supported by the mobile station; otherwise, the mobile station shall set the subfield to '0'.

The mobile station shall set the RESERVED subfield to '000000'.

SYNC_ID_INCL - Service Configuration synchronization identifier included indicator.

If $P\_REV\_IN\_USE_S$ is less than seven, the mobile station shall omit this field; otherwise, the mobile station shall include this field and shall set it as follows:

The mobile station shall set this field to '1' if the SYNC_ID field is included in this message; otherwise, the mobile station shall set this field to '0'.

If $SYNC\_ID\_SUPPORTED_S$ is equal to '0', the mobile station shall set this field to '0'.

SYNC_ID_LEN - Service Configuration synchronization identifier length indicator.

If the SYNC_ID_INCL field is not included or is included and is set to '0', the mobile station shall omit this field; otherwise the mobile station shall include this field and set it as follows:

The mobile station shall set this field to the length of the SYNC_ID field included in this message.

SYNC_ID - Service Configuration synchronization identifier.

If the SYNC_ID_INCL field is not included, or is included but is set to '0', the mobile station shall omit this field; otherwise, the mobile station shall include this field and set it as

follows:

The mobile station shall set this field to the Service Configuration synchronization identifier corresponding to a stored service configuration.

PREV_SID_INCL - Previous System Identification (SID) included indicator.

If $P\_REV\_IN\_USE_S$ is less than seven, the mobile station shall omit this field; otherwise, the mobile station shall include this field and set it as follows:

The mobile station shall set this field to '1' if:

- The mobile station determines that the SID has been changed after a packet data dormant handoff, and
- This message includes the main service instance (see [42]).

Otherwise, the mobile station shall set this field to '0'.

PREV_SID - Previous System Identification.

If PREV_SID_INCL is not included, or is included but is set to '0', the mobile station shall omit this field; otherwise, the mobile station shall include this field and set it as follows:

The mobile station shall set this field to the previous SID.

PREV_NID_INCL - Previous Network Identification (NID) included indicator.

If $P\_REV\_IN\_USE_S$ is less than seven, the mobile station shall omit this field; otherwise, the mobile station shall include this field and set it as follows:

The mobile station shall set this field to '1' if:

- The mobile station determines that NID has been changed after a packet data dormant handoff, and
- This message includes the main service instance (see [42]).

Otherwise, the mobile station shall set this field to '0'.

PREV_NID - Previous Network Identification.

If PREV_NID_INCL is not included, or is included but is set to '0', the mobile station shall omit this field; otherwise, the mobile station shall include this field and set it as follows:

The mobile station shall set this field to the previous NID.

PREV_PZID_INCL - Previous Packet Zone ID (PZID) included indicator.

If $P\_REV\_IN\_USE_S$ is less than seven, the mobile station shall omit this field; otherwise, the mobile station shall include this field and set it as follows:

The mobile station shall set this field to '1' if:

- The mobile station determines that the Packet Zone ID has been changed after a packet data dormant handoff, and
- This message includes the main service instance (see [42]).

Otherwise, the mobile station shall set this field to '0'.

PREV_PZID - Previous Packet Zone ID.

If PREV_PZID_INCL is not included, or is included but is set to '0', the mobile station shall omit this field; otherwise, the mobile station shall include this field and set it as follows:

The mobile station shall set this field to the previous PZID.

SO_BITMAP_IND - Service option bitmap indicator.

If $P\_REV\_IN\_USE_S$ is less than 7, the mobile station shall omit this field; otherwise, the mobile station shall set this field as defined in Table 2.7.1.3.2.4-10.

Table 2.7.1.3.2.4-10. Encoding of the SO_BITMAP_IND Field

SO_BITMAP_IND	Size of bitmap (in bits) included
00	0 bit (i.e., No bitmap included)
01	4 bits
10	8 bits
11	16 bits

SO_GROUP_NUM - Service option group number.

If SO_BITMAP_IND is included and not set to '00', the mobile station shall include this field and set this field to service option group number defined in [30], of the bitmap to be included in this message; otherwise, the mobile station shall omit this field.

SO_BITMAP – Service option bitmap.

If the field SO_BITMAP_IND is included and is not set to '00', the mobile station shall include the bitmap of the service option group (SO_GROUP_NUM); otherwise, the mobile station shall omit this field.

When the service option bitmap is included, if there are more than (2^(1+SO_BITMAP_IND)) service options defined in [30] for the service option group [SO_GROUP_NUM], the mobile station shall include the bitmap containing the least significant bits (2^(1+SO_BITMAP_IND)) for the service option group.

The mobile station shall set a bit in this bitmap to ‘1’, if the mobile station is capable of supporting the service option for which the bit represents; otherwise, the mobile station shall set a bit in this bitmap to ‘0’.

SDB_DESIRED_ONLY – Short Data Burst Desired Only.

If $P\_REV\_IN\_USE_S$ is less than eight, the mobile station shall omit this field; otherwise, the mobile station shall include this field and set it as follows:

If the mobile station desires to exchange user data using only Short Data Bursts on common channels, it shall set this field to '1'; otherwise, it shall set this field to '0'.

ALT_BAND_CLASS_SUP – Alternate band class support indicator.

If $P\_REV\_IN\_USE_S$ is less than eight, then the mobile station shall omit this field; otherwise, the mobile station shall include this field and set it as follows:

If $BAND\_CLASS\_INFO\_REQ_S$ is equal to ‘1’ and the mobile station supports the CDMA band class specified by $ALT\_BAND\_CLASS_S$, then the mobile station shall set this field to ‘1’; otherwise, the mobile station shall set this field to ‘0’.

MSG_INT_INFO_INCL - Signaling message integrity information included indicator.

If $P\_REV\_IN\_USE_S$ is less than nine, the mobile station shall omit this field; otherwise, the mobile station shall include this field and set it as follows.

If $MSG\_INTEGRITY\_SUP_S$ is set to ‘0’, the mobile station shall set this field to ‘0’; otherwise, the mobile station shall set this field to ‘1’.

SIG_INTEGRITY_SUP_INCL - Signaling message integrity information included indicator.

If MSG_INT_INFO_INCL is included and is set to ‘1’, the mobile station shall include this field and set it as follows; otherwise, the mobile station shall omit this field.

If the mobile station supports other integrity algorithm(s) in addition to the default integrity algorithm, the mobile station shall set this field to ‘1’; otherwise, the mobile station shall set this field to ‘0’.

SIG_INTEGRITY_SUP - Signaling integrity algorithm supported by the mobile station.

If SIG_INTEGRITY_SUP_INCL is included and is set to ‘1’, the mobile station shall set this field as follows; otherwise, the mobile station shall omit this field.

The mobile station shall set this field to indicate the supported message integrity algorithms in addition to the default integrity algorithm.

This field consists of the subfields shown in Table 2.7.1.3.2.1-6.

The mobile station shall set each subfield to ‘1’ if the corresponding message integrity algorithm is supported by the mobile station; otherwise, the mobile station shall set the subfield to ‘0’.

The mobile station shall set the RESERVED subfield to ‘00000000’.

SIG_INTEGRITY_REQ - Signaling message integrity algorithm requested by the mobile station.

If SIG_INTEGRITY_SUP_INCL is included and is set to ‘1’, the mobile station shall set this field as follows; otherwise, the mobile station shall omit this field.

The mobile station shall include this field and set it to the value corresponding to the message integrity algorithm requested as shown in Table 2.7.1.3.2.1-7.

NEW_KEY_ID - New key identifier.

If MSG_INT_INFO_INCL is included and is set to ‘1’, the mobile station shall include this field and set it as follows; otherwise, the mobile station shall omit this field.

The mobile station shall set this field as follows:

- If LAST_2G_KEY_ID equals ‘00’, the mobile station shall set this field to ‘01’.
- If LAST_2G_KEY_ID equals ‘01’, the mobile station shall set this field to ‘00’.

NEW_SSEQ_H_INCL - The include indicator of the 24 MSB of the security sequence number.

If MSG_INT_INFO_INCL is included and is set to ‘1’, the mobile station shall include this field and set it as follows; otherwise, the mobile station shall omit this field.

The mobile station shall set this field to ‘0’ if any of the following is true:

- If SIG_ENCRYPT_SUP is included and the ECMEA or REA subfield in SIG_ENCRYPT_SUP is set to ‘1’
- RESTORE_KEYS is equal to ‘1’.

In all other cases, the mobile station shall set this field to ‘1’.

NEW_SSEQ_H - The 24-bit value used to initialize the 24 MSB of the crypto-sync.

If NEW_SSEQ_H_INCL is included and is set to ‘1’, the mobile station shall include this field and set this field as follows; otherwise, the mobile station shall omit this field.

The mobile station shall set this field to a 24-bit value that will be used as the initial value of the 24 MSB of the crypto-sync for both forward and reverse link message integrity.

NEW_SSEQ_H_SIG - The signature of NEW_SSEQ_H

If NEW_SSEQ_H_INCL is included and is set to '1', the mobile station shall include this field and set this field as follows; otherwise, the mobile station shall omit this field.

The mobile station shall set this field to the digital signature of the NEW_SSEQ_H computed as described in 2.3.12.4.5.

FOR_PDCH_SUPPORTED - Forward Packet Data Channel supported indicator.

If $P\_REV\_IN\_USE_S$ is less than nine, the mobile station shall omit this field; otherwise, the mobile station shall include this field and set it as follows.

If the mobile station supports the Forward Packet Data Channel, then the mobile station shall set this field to '1'; otherwise, the mobile station shall set this field to '0'.

FOR_PDCH Capability

Type-specific fields - Forward Packet Data Channel capability information.

If the FOR_PDCH_SUPPORTED field is included and is set to '1', the mobile station shall include this field and set it as defined in 2.7.4.27.5; otherwise, the mobile station shall omit this field.

EXT_CH_IND - Extended Channel Indicator.

If the CH_IND field is not included or is included but is not set to '00', the mobile station shall omit this field; otherwise, the mobile station shall include this field and set it as follows.

The mobile station shall set this field as shown in Table 2.7.1.3.2.4-11 to request a physical resource.

Table 2.7.1.3.2.4-11. Extended Channel Indicator

EXT_CH_IND (Binary)	Physical Resource(s) Requested
00000	Reserved
00001	F-PDCH + F-CPCCH + R-FCH
00010	F-PDCH + F-CPCCH + R-DCCH
00011	F-PDCH + F-FCH + R-FCH
00100	F-PDCH + F-DCCH + R-DCCH
00101	F-PDCH + F-FCH + R-FCH + R-DCCH
00110	F-PDCH + F-FCH + R-FCH + F-DCCH + R-DCCH
00111	Reserved
01000	F-PDCH + R-PDCH + F-CPCCH
01001	F-PDCH + R-PDCH + F-CPCCH + R-FCH
01010	F-PDCH + R-PDCH + F-CPCCH + R-DCCH
01011	F-PDCH + R-PDCH + F-FCH + R-FCH
01100	F-PDCH + R-PDCH + F-DCCH + R-DCCH
01101	F-PDCH + R-PDCH + F-FCH + R-FCH + R-DCCH
01110	F-PDCH + R-PDCH + F-FCH + R-FCH + F-DCCH + R-DCCH

EXT_CH _IND (Binary)	Physical Resource(s) Requested
01111	F-PDCH + F-FCH + F-DCCH + R-DCCH
10000	F-PDCH + F-CPCCH + F-DCCH + R-DCCH
10001	F-PDCH + F-CPCCH + F-FCH + F-DCCH + R-DCCH
10010	F-PDCH + F-CPCCH + F-FCH + R-FCH + F-DCCH + R-DCCH
10011	F-PDCH + R-PDCH + F-FCH + F-DCCH + R-DCCH
10100	F-PDCH + R-PDCH + F-CPCCH + F-DCCH + R-DCCH
10101	F-PDCH + R-PDCH + F-CPCCH + F-FCH + F-DCCH + R-DCCH
10110	F-PDCH + R-PDCH + F-CPCCH + F-FCH + R-FCH + F-DCCH + R-DCCH
10111 ~11111	Reserved

SIGN_SLOT_CYCLE_INDEX – Sign of the slot cycle index.

If $P\_REV\_IN\_USE_S$ is less than 11, or if the SLOT_CYCLE_INDEX field is set to '000', the mobile station shall omit this field; otherwise, the mobile station shall include this field and set it as follows:

The mobile station shall set this field as specified in Table 2.7.1.3.2.1-8 to the sign of the preferred slot cycle index, $SLOT\_CYCLE\_INDEX_p$ (see 2.6.2.1.1). The absolute value of the preferred slot cycle index, $SLOT\_CYCLE\_INDEX_p$, is specified in the SLOT_CYCLE_INDEX field of this message.

ADD_SERV_INSTANCE_INCL- Additional service instances included indicator.

If $P\_REV\_IN\_USE_S$ is less than 11 or if SR_ID is included and set to '111', the mobile station shall omit this field; otherwise, the mobile station shall include this field and set it as follows:

If at least one occurrence of the ADD_SR_ID field is included in this message, the mobile station shall set this field to '1'; otherwise, the mobile station shall set this field to '0'.

If SYNC_ID_INCL is equal to '0' and $MAX\_ADD\_SERV\_INSTANCE_S$ is equal to '0', the mobile station shall set this field to '0'.

NUM_ADD_SERV_INSTANCE - Number of additional service instances included.

If ADD_SERV_INSTANCE_INCL is not included or is included and set to '0', the mobile station shall omit this field; otherwise, the mobile station shall include this field and set it to the number of additional service instances included in this message.

If SYNC_ID_INCL is equal to '0', the mobile station shall set this field to a value less than or equal to $MAX\_ADD\_SERV\_INSTANCE_S$.

If ADD_SERV_INSTANCE_INCL is included and set to '1', the mobile station shall include NUM_ADD_SERV_INSTANCE occurrences of the following variable-field record:

ADD_SR_ID – Additional service reference identifier.

If SYNC_ID_INCL is set to '0', the mobile station shall set this field as follows:

- If the service instance provides a service reference identifier, the mobile station shall set this field to the service reference identifier specified by the service instance. If the service instance does not provide a service reference identifier, the mobile station shall set this field to the smallest unused service reference identifier value between 1 and 6 (inclusive).

Otherwise, the mobile station shall set this field to the service reference identifier corresponding to the service option connection that the mobile station requests to be restored from the stored service configuration.

ADD_DRS – Additional Data Ready to Send indicator.

If the service instance corresponding to the ADD_SR_ID field of this record has data to send, the mobile station shall set this field to '1'; otherwise, the mobile station shall set this field to '0'.

ADD_SERVICE_OPTION_INCL - Additional service option included indicator.

If SYNC_ID_INCL is set to '1', the mobile station shall omit this field; otherwise, the mobile station shall include this field and set it as follows:

The mobile station shall set this field to '0' if the requested service option number of the service instance corresponding to the ADD_SR_ID field of this record is the same as SERVICE_OPTION; otherwise, the mobile station shall set this field to '1'.

ADD_SERVICE_OPTION – Additional service option number.

If the ADD_SERVICE_OPTION_INCL field of this record is not included or is included and set to '0', the mobile station shall omit this field; otherwise, the mobile station shall include this field and set it to the value specified in [30], corresponding to the requested service option number of the service instance corresponding to the ADD_SR_ID field of this record.

ADD_QOS_PARMS_INCL – Additional QoS parameters included indicator.

If SYNC_ID_INCL is set to '1', the mobile station shall omit this field; otherwise, the mobile station shall include this field and set it as follows:

If QoS parameters for the service instance corresponding to the ADD_SR_ID field of this record are included in this message, the mobile station shall set this field to '1'; otherwise, the mobile station shall set this field to '0'.

The mobile station shall not set this field to '1' if MOB_QOS_S is set to '0'.

ADD_QOS_PARMS_LEN – Additional Length of the block of QoS parameters.

If the ADD_QOS_PARMS_INCL field of this record is not included or is included and is set to '0', the mobile station shall omit this field; otherwise, the mobile station shall include this field and set it to the combined length of the ADD_QOS_PARMS field and the ADD_QOS_RESERVED field of this record, in octets.

ADD_QOS_PARMS – Additional QoS parameters block.

If the ADD_QOS_PARMS_INCL field of this record is not included or is included and is set to '0', the mobile station shall omit this field; otherwise, the mobile station shall include this field and set it to the set of QoS parameter values as defined in accordance with the requirements for the requested service option and/or for the user, per subscription.

ADD_QOS_RESERVED – Additional QoS reserved bits.

If the ADD_QOS_PARMS_INCL field of this record is not included or is included and is set to '0', the mobile station shall omit this field; otherwise, the mobile station shall include the minimum number of bits of '0', such that the combined length of the QOS_PARMS field and of this field is an integer number of octets.

BCMC_INCL - BCMC information included indicator

If the $P\_REV\_IN\_USE_S$ is less than eleven, the mobile station shall omit this field; otherwise, the mobile station shall include this field and set it as follows:

The mobile station shall set this field to '1' if one or more BCMC_PROGRAM_IDs are included in the message; otherwise, the mobile station shall set this field to '0'.

BCMC_ORIG_ONLY_IND - BCMC origination only indicator

If the BCMC_INCL field is not included or is included and is set to '0', the mobile station shall omit this field; otherwise, the mobile station shall include this field and set it as follows:

The mobile station shall set this field to '1' to indicate that this origination is only for BCMC and no point to point call is requested in this message; otherwise the mobile station shall set this field to '0'.

FUNDICATED_BCMC_SUPPORTED - Fundicated BCMC capability type-specific supported indicator.

If the BCMC_INCL field is not included or is included and is set to '0', the mobile station shall omit this field; otherwise, the mobile station shall include this field and set it as follows.

If the mobile station supports Fundicated BCMC channel configurations, the mobile station shall set this field to '1'; otherwise, the mobile station shall set this field to '0'.

FUNDICATED_BCMC Capability

Type-specific fields - FUNDICATED_BCMC capability information.

If the FUNDICATED_BCMC_SUPPORTED field is included and is set to '1', the mobile station shall include this field and set it as defined in 2.7.4.27.7; otherwise, the mobile station shall omit this field.

AUTH_SIGNATURE_INCL - Authorization signature included indication.

If the BCMC_INCL field is not included or is included and is set to '0', the mobile station shall omit this field; otherwise, the mobile station shall include this field and set it as follows.

The mobile station shall set this field to '1' to indicate that the authorization signature is included in this message for some of the BCMC flows included in this message; otherwise, the mobile station shall set this field to '0'.

TIME_STAMP_SHORT_LENGTH - Length of time stamp included in this message.

If the AUTH_SIGNATURE_INCL field is not included or is included and is set to '0', the mobile station shall omit this field; otherwise, the mobile station shall include this field and set it as follows:

The mobile station shall set this field to the length of the time stamp, in units of bits, included in this message.

TIME_STAMP_SHORT - Time stamp short.

If the AUTH_SIGNATURE_INCL field is not included or is included and is set to '0', the mobile station shall omit this field; otherwise, the mobile station shall include this field and set it as follows:

The mobile station shall set this field to the TIME_STAMP_SHORT_LENGTH least significant bits of the time stamp parameter used to generate the Authorization signature included in this message.

NUM_BCMC_PROGRAMS - Number of BCMC Programs

If the BCMC_INCL field is not included or is included and is set to '0', the mobile station shall omit this field; otherwise, the mobile station shall include this field and set it as follows:

The mobile station shall set this field to the number of BCMC programs included in this message minus 1.

The mobile station shall include NUM_BCMC_PROGRAMS+1 occurrences of the following variable length record:

BCMC_PROGRAM_ID_LEN - Length of BCMC_PROGRAM_ID field

The mobile station shall set this field to one less than the length, in bits, of the BCMC_PROGRAM_ID of this program.

BCMC_PROGRAM_ID - BCMC program Identifier

The length of this field shall be one more than the value of BCMC_PROGRAM_ID_LEN bits.

The mobile station shall set this field to the identifier of the BCMC program corresponding to one or more flows that the mobile station will continue to monitor or start to monitor upon receiving confirmation of delivery of this message or is requesting transmission.

BCMC_FLOW_DISCRIMINATOR_LEN - Length of BCMC_FLOW_DISCRIMINATOR field

The mobile station shall set this field to the length, in bits, of the BCMC_FLOW_DISCRIMINATOR of this program. To request all flows associated with this BCMC_PROGRAM_ID, the mobile station may set this field to '000'.

NUM_FLOW_DISCRIMINATOR - Number of BCMC flow discriminators

The length of this field shall be determined by the value of the BCMC_FLOW_DISCRIMINATOR_LEN as follows: if BCMC_FLOW_DISCRIMINATOR_LEN is set to '000', this field is omitted; otherwise, the length of this field shall be BCMC_FLOW_DISCRIMINATOR_LEN bits.

The mobile station shall set this field to the number of flow discriminators included for this program minus one.

If NUM_FLOW_DISCRIMINATOR field is included, the mobile station shall include NUM_FLOW_DISCRIMINATOR+1 occurrences of the following variable length record; otherwise, the mobile station shall include 1 occurrence of the following variable length record:

BCMC_FLOW_DISCRIMINATOR – BCMC Flow discriminator.

The length of this field shall be determined by the value of the BCMC_FLOW_DISCRIMINATOR_LEN as follows: if BCMC_FLOW_DISCRIMINATOR_LEN is set to '000', this field is omitted; otherwise, the length of this field shall be BCMC_FLOW_DISCRIMINATOR_LEN bits.

The mobile station shall set this field to the BCMC flow discriminator requested.

AUTH_SIGNATURE_IND - Authorization signature indicator.

If the AUTH_SIGNATURE_INCL field is not included or is included and is set to '0', the mobile station shall omit this field; otherwise, the mobile station shall include this field and set it as follows:

The mobile station shall set this field to '1' to indicate that the authorization signature is included in this message for this BCMC flow; otherwise, the mobile station shall set this field to '0'.

AUTH_SIGNATURE_SAME_IND - Authorization signature same as previous BCMC flow indicator.

If the AUTH_SIGNATURE_IND field is not included or is included and is set to '0', the mobile station shall omit this field; otherwise, the mobile station shall include this field and set it as follows:

The mobile station shall set this field to ‘1’ to indicate that the authorization signature generated for this BCMC flow is the same as the one generated for the BCMC flow listed prior to this BCMC flow in this message; otherwise, the mobile station shall set this field to ‘0’.

For the first BCMC flow listed in this message, the mobile station shall set this field to ‘0’.

BAK_ID - BAK identifier.

If the AUTH_SIGNATURE_SAME_IND field is not included or is included and is set to ‘1’, the mobile station shall omit this field; otherwise, the mobile station shall include this field and set it as follows:

The mobile station shall set this field to BAK identifier used to generate the Authorization signature included in this message.

AUTH_SIGNATURE - Authorization signature.

If the AUTH_SIGNATURE_SAME_IND field is not included or is included and is set to ‘1’, the mobile station shall omit this field; otherwise, the mobile station shall include this field and set it as follows:

The mobile station shall set this field to the Authorization signature computed for this BCMC flow as specified in 2.6.13.9.

REV_PDCH_SUPPORTED - Reverse Packet Data Channel supported indicator.

If $P\_REV\_IN\_USE_S$ is less than 11 or FOR_PDCH_SUPPORTED is not included or is included and is set to ‘0’, the mobile station shall omit this field; otherwise, the mobile station shall include this field and set it as follows.

If the mobile station supports the Reverse Packet Data Channel (R-PDCH), the mobile station shall set this field to ‘1’; otherwise, the mobile station shall set this field to ‘0’.

REV_PDCH Capability

Type-specific fields - Reverse Packet Data Channel capability information.

If the REV_PDCH_SUPPORTED field is included and is set to ‘1’, the mobile station shall include this field and set it as defined in 2.7.4.27.6; otherwise, the mobile station shall omit this field.

BAND_SUB_REP_INCL – Band class – band subclass report included

If $P\_REV\_IN\_USE_S$ is less than eleven, the mobile station shall omit this field; otherwise, the mobile station shall include this field and set it as follows:

If $CAND\_BAND\_INFO\_REQ_S$ is equal to '1' and the mobile station supports at least 1 band class and band subclass (if applicable) combination queried by the base station, the mobile station shall set this field to '1'; otherwise, the mobile station shall set this field to '0'.

NUM_BAND_SUBCLASS – Number of band class - band subclass capabilities reported

If BAND_SUB_REP_INCL is set to '0' or is not included, this field shall be omitted; otherwise, the mobile station shall include this field and set it as follows:

If the mobile station supports all candidate band class and band subclass (if applicable) combinations queried by the base station, the mobile station shall set this field to '0000'; otherwise, the mobile station shall set this field to the number of band class-band subclass capabilities reported.

If the NUM_BAND_SUBCLASS field is included in this message, the mobile station shall include NUM_BAND_SUBCLASS occurrences of the BAND_SUBCLASS_SUP field:

BAND_SUBCLASS_SUP – Band class-band subclass supported indicator

The mobile station shall set this field as specified in section 2.6.14.1.

ADD_GEO_LOC_INCL – Additional Geo-location included indicator.

If $P\_REV\_IN\_USE_S$ is less than twelve, the mobile station shall omit this field; otherwise, the mobile station shall include this field and set it as follows.

If the message is to contain the ADD_GEO_LOC_TYPE field, the mobile station shall set this field to '1'; otherwise, the mobile station shall set this field to '0'.

ADD_GEO_LOC_TYPE_LEN_IND – Additional Geo-Location Type Length Indicator.

If ADD_GEO_LOC_INCL is included in the message and is set to '1', the mobile station shall include this field and shall set it as described below; otherwise, the mobile station shall omit this field.

The mobile station shall set this field to '0' to indicate length of the ADD_GEO_LOC_TYPE field is 16 bits. The mobile station shall set this field to '1' to indicate length of the ADD_GEO_LOC_TYPE field is 24 bits.

ADD_GEO_LOC_TYPE – Additional Geo-Location Type.

If ADD_GEO_LOC_INCL is included in the message and is set to ‘1’, the mobile station shall include this field and shall set it as described below; otherwise, the mobile station shall omit this field.

This field consists of the subfields shown in 2.7.4.46-1.

The mobile station shall set each subfield to ‘1’ if the corresponding capability is supported by the mobile station; otherwise, the mobile station shall set the subfield to ‘0’.

2.7.1.3.2.5 Page Response Message

MSG_TAG: PRM

Field	Length (bits)
MOB_TERM	1
SLOT_CYCLE_INDEX	3
MOB_P_REV	8
SCM	8
REQUEST_MODE	3
SERVICE_OPTION	16
PM	1
NAR_AN_CAP	1
ENCRYPTION_SUPPORTED	0 or 4
NUM_ALT_SO	3

NUM_ALT_SO occurrences of the following field:

{ (NUM_ALT_SO)

ALT_SO	16

} (NUM_ALT_SO)

(continues on next page)

Field	Length (bits)
UZID_INCL	0 or 1
UZID	0 or 16
CH_IND	0 or 2
OTD_SUPPORTED	0 or 1
QPCH_SUPPORTED	0 or 1
ENHANCED_RC	0 or 1
FOR_RC_PREF	0 or 5
REV_RC_PREF	0 or 5
FCH_SUPPORTED	0 or 1
FCH Capability Type-specific fields	0 or variable
DCCH_SUPPORTED	0 or 1
DCCH Capability Type-specific fields	0 or variable
REV_FCH_GATING_REQ	0 or 1
STS_SUPPORTED	0 or 1
3X_CCH_SUPPORTED	0 or 1
WLL_INCL	0 or 1
WLL_DEVICE_TYPE	0 or 3
HOOK_STATUS	0 or 4
ENC_INFO_INCL	0 or 1
SIG_ENCRYPT_SUP	0 or 8
D_SIG_ENCRYPT_REQ	0 or 1
C_SIG_ENCRYPT_REQ	0 or 1
NEW_SSEQ_H	0 or 24
NEW_SSEQ_H_SIG	0 or 8
UI_ENCRYPT_REQ	0 or 1
UI_ENCRYPT_SUP	0 or 8

(continues on next page)

Field	Length (bits)
SYNC_ID_INCL	0 or 1
SYNC_ID_LEN	0 or 4
SYNC_ID	0 or (8 × SYNC_ID_LEN)
SO_BITMAP_IND	0 or 2
SO_GROUP_NUM	0 or 5
SO_BITMAP	0 or 2^(1+SO_BITMAP_IND)
ALT_BAND_CLASS_SUP	0 or 1
MSG_INT_INFO_INCL	0 or 1
SIG_INTEGRITY_SUP_INCL	0 or 1
SIG_INTEGRITY_SUP	0 or 8
SIG_INTEGRITY_REQ	0 or 3
NEW_KEY_ID	0 or 2
NEW_SSEQ_H_INCL	0 or 1
NEW_SSEQ_H	0 or 24
NEW_SSEQ_H_SIG	0 or 8

FOR_PDCH_SUPPORTED	0 or 1
FOR_PDCH Capability Type-specific fields	0 or variable
EXT_CH_IND	0 or 5
SIGN_SLOT_CYCLE_INDEX	0 or 1
BCMC_INCL	0 or 1
BCMC_PREF_INCL	0 or 1
FUNDICATED_BCMC_SUPPORTED	0 or 1
FUNDICATED_BCMC Capability Type-specific fields	0 or variable
AUTH_SIGNATURE_INCL	0 or 1
TIME_STAMP_SHORT_LENGTH	0 or 8
TIME_STAMP_SHORT	0 or Variable
NUM_BCMC_PROGRAMS	0 or 3

NUM_BCMC_PROGRAMS+1 occurrences of the following variable length record:

{ (NUM_BCMC_PROGRAMS+1)

BCMC_PROGRAM_ID_LEN	5
BCMC_PROGRAM_ID	Variable (Value of BCMC_PROGRAM_ID _LEN + 1)
BCMC_FLOW_DISCRIMINATOR_ LEN	3
NUM_FLOW_DISCRIMINATOR	BCMC_FLOW_DISCR IMINATOR_LEN

NUM_FLOW_DISCRIMINATOR+1 or 1 occurrences of the following variable length record:

{ (NUM_FLOW_DISCRIMINATOR+1) or 1

BCMC_FLOW_DISCRIMINATOR	BCMC_FLOW_DISCRIM INATOR_LEN
BCMC_PREF	0 or 1
AUTH_SIGNATURE_IND	0 or 1
AUTH_SIGNATURE_SAME_IND	0 or 1

BAK_ID	0 or 4
AUTH_SIGNATURE	0 or 32

} (NUM_FLOW_DISCRIMINATOR+1) or 1

} (NUM_BCMC_PROGRAMS+1)

REV_PDCH_SUPPORTED	0 or 1
REV_PDCH Capability Type-specific fields	0 or variable
BAND_SUB_REP_INCL	0 or 1
NUM_BAND_SUBCLASS	0 or 4

NUM_BAND_SUBCLASS occurrences of the following field:

{ (NUM_BAND_SUBCLASS)

BAND_SUBCLASS_SUP	1

} (NUM_BAND_SUBCLASS)

MOB_TERM – Mobile terminated calls accepted indicator.

If the mobile station is configured to accept mobile terminated calls while operating with the current roaming status (see 2.6.5.3), the mobile station shall set this bit to '1'. Otherwise, the mobile station shall set this bit to '0'.

SLOT_CYCLE_INDEX – Slot cycle index.

If $P\_REV\_IN\_USE_S$ is less than 11, or if MIN_SLOT_CYCLE_INDEX is equal to '0', the mobile station shall perform the following:

- If the mobile station is configured for slotted mode operation, the mobile station shall set this field to max (0, $SLOT\_CYCLE\_INDEX_p$) (see 2.6.2.1.1). Otherwise, the mobile station shall set this field to '000'.

Otherwise, the mobile station shall perform the following:

- If the mobile station is configured for slotted mode operation, the mobile station shall set this field to the absolute value of the preferred slot cycle index, $SLOT\_CYCLE\_INDEX_p$ (see 2.6.2.1.1); otherwise, the mobile station shall set this field to '000'. The sign of $SLOT\_CYCLE\_INDEX_p$ is specified in the SIGN_SLOT_CYCLE_INDEX field of this message (see Table 2.7.1.3.2.1-8).

MOB_P_REV – Protocol revision of the mobile station.

The mobile station shall set this field to '00001100'.

SCM – Station class mark.

The mobile station shall set this field to the station class mark of the mobile station. See 2.3.3.

REQUEST_MODE – Requested mode code. The mobile station shall set this field to the value shown in Table 2.7.1.3.2.4-1 corresponding to its current configuration.

SERVICE_OPTION – Service option.

If the mobile station accepts the service option specified by the mobile-station-addressed page, it shall set this field as follows:

- If the page record to which the mobile station is responding contained a SERVICE OPTION field, the mobile station shall set this field to the service option number specified in the SERVICE OPTION field of the page record to which the mobile station is responding.
- If the page record to which the mobile station is responding did not contain a SERVICE OPTION field, the mobile station shall set this field to the default option number '0000000000000001'.

If the mobile station does not accept the service option specified by the mobile-station-addressed page to which the mobile station is responding and the mobile station has an alternative service option to request, the mobile station shall set this field to the service option code specified in [30] corresponding to the alternative service option.

If the mobile station does not accept the service option specified by the mobile-station-addressed page to which the mobile station is responding and the mobile station does not have an alternative service option to request, the mobile station shall set this field to '0000000000000000' to reject the service option specified by the page record of the *General Page Message* or *Universal Page Message* to which the mobile station is responding.

If the mobile station is not responding to a page and the service option for this call setup is not known, the mobile station shall set this field to '0000000000000001' to indicate the base station is not to use this field[3].

PM – Privacy mode indicator.

To request voice privacy, the mobile station shall set this field to '1'; otherwise, the mobile station shall set this field to '0'.

NAR_AN_CAP – Narrow analog capability.

[3] This scenario could occur only in a Direct Channel Assignment call setup.

If the mobile station is capable of narrow analog operation, the mobile station shall set this bit to '1'; otherwise, the mobile station shall set this bit to '0'. The mobile station shall set this bit to '0'.

ENCRYPTION_SUPPORTED – Encryption algorithms supported by the mobile station.

If $P\_REV\_IN\_USE_S$ is greater than or equal to seven or AUTH_MODE is equal to '00', the mobile station shall omit this field. If $P\_REV\_IN\_USE_S$ is less than seven and AUTH_MODE is not equal to '00', then the mobile station shall set this field as specified in table 2.7.1.3.2.4-5.

NUM_ALT_SO – Number of alternative service options.

If $P\_REV\_IN\_USE_S$ is less than seven, the mobile station shall set this field to the number of alternative service options it supports other than the one specified in the SERVICE_OPTION field. The mobile station shall set this field to a value less than or equal to $MAX\_NUM\_ALT\_SO_S$.

If $P\_REV\_IN\_USE_S$ is equal to or greater than seven, the mobile station shall set this field to the number of alternate service options, which either have no service option group number assigned or do not belong to the same service option group whose bitmap is being included. The alternate service option numbers are other than the one specified in the SERVICE_OPTION field. The mobile station shall set this field to a value less than or equal to $MAX\_NUM\_ALT\_SO_S$.

ALT_SO – Alternative service option.

The mobile station shall include NUM_ALT_SO occurrences of this field. The mobile station shall set this field to the value specified in [30], corresponding to the alternative service option supported by the mobile station.

If $P\_REV\_IN\_USE_S$ is equal to or greater than seven, the mobile station shall include NUM_ALT_SO occurrences of in this field. The mobile station shall set this field to the service option number defined in [30] corresponding to the alternate service options which either have no service option group number assigned or do not belong to the same service option group whose bitmap is included in this message.

UZID_INCL – User Zone Identifier included indicator.

If $P\_REV\_IN\_USE_S$ is less than six, the mobile station shall omit this field; otherwise, the mobile station shall include this field and set it as follows.

If the message is to contain the User Zone Identifier, the mobile station shall set this field to '1'; otherwise, the mobile station shall set this field to '0'.

UZID – User Zone Identifier.

If the UZID_INCL field is included in the message and is set to '1', the mobile station shall include this field and set it to $UZID_S$; otherwise, the mobile station shall omit this field.

CH_IND – Channel Indicator.

If $P\_REV\_IN\_USE_S$ is less than six, the mobile station shall omit this field; otherwise, the mobile station shall include this field and set it, as shown in Table 2.7.1.3.2.5-1, to request physical resources.

Table 2.7.1.3.2.5-1. Channel indicator

CH_IND (binary)	Channel(s) Requested
00	Refer to EXT_CH_IND
01	Fundamental Channel
10	Dedicated Control Channel
11	Fundamental Channel and Dedicated Control Channel

OTD_SUPPORTED – Orthogonal transmit diversity supported indicator

If $P\_REV\_IN\_USE_S$ is less than six, the mobile station shall omit this field; otherwise, the mobile station shall include this field and set it as follows.

If the mobile station supports orthogonal transmit diversity, it shall set this field to '1'; otherwise, the mobile station shall set this field to '0'.

QPCH_SUPPORTED – Quick Paging Channel supported indicator.

If $P\_REV\_IN\_USE_S$ is less than six, the mobile station shall omit this field; otherwise, the mobile station shall include this field and set it as follows.

If the mobile station supports the Quick Paging Channel, the mobile station shall set this field to '1'; otherwise, the mobile station shall set this field to '0'.

ENHANCED_RC – Enhanced radio configuration supported indicator.

If $P\_REV\_IN\_USE_S$ is less than six, the mobile station shall omit this field; otherwise, the mobile station shall include this field and set it as follows.

If the mobile station supports any radio configuration in the Radio Configuration Class 2 (see 1.1.1), the mobile station shall set this field to '1'; otherwise, the mobile station shall set this field to '0'.

FOR_RC_PREF – Forward Radio Configuration preference.

If $P\_REV\_IN\_USE_S$ is less than six, the mobile station shall omit this field; otherwise, the mobile station shall include this field and set it as follows.

The mobile station shall set this field to its preferred Radio Configuration for the Forward Fundamental Channel and/or Forward Dedicated Control Channel.

REV_RC_PREF – Reverse Radio Configuration preference.

If $P\_REV\_IN\_USE_S$ is less than six, the mobile station shall omit this field; otherwise, the mobile station shall include this field and set it as follows.

The mobile station shall set this field to its preferred Radio Configuration for the Reverse Fundamental Channel and/or Reverse Dedicated Control Channel.

FCH_SUPPORTED – Fundamental Channel supported indicator.

If $P\_REV\_IN\_USE_S$ is less than six, the mobile station shall omit this field; otherwise, the mobile station shall include this field and set it as follows.

The mobile station shall set this field to '1' if the mobile station supports Fundamental Channel; otherwise, the mobile station shall set this field to '0'.

FCH Capability Type specific fields – Fundamental Channel capability information.

If the FCH_SUPPORTED field is included and is set to '1', the mobile station shall include this field and set it as described in 2.7.4.27.1; otherwise, the mobile station shall omit this field.

DCCH_SUPPORTED – Dedicated Control Channel supported indicator.

If $P\_REV\_IN\_USE_S$ is less than six, the mobile station shall omit this field; otherwise, the mobile station shall include this field and set it as follows.

The mobile station shall set this field to '1' if the mobile station supports Dedicated Control Channel; otherwise, the mobile station shall set this field to '0'.

DCCH Capability Type specific fields – Dedicated Control Channel capability information.

If DCCH_SUPPORTED is included and is set to '1', the mobile station shall include this field and set it as defined in 2.7.4.27.2; otherwise, the mobile station shall omit this field.

REV_FCH_GATING_REQ – Reverse Fundamental Channel eighth gating mode request indicator.

If $P\_REV\_IN\_USE_S$ is less than six, the mobile station shall omit this field; otherwise, the mobile station shall include this field and set it as follows:

If the mobile station requests to turn on the reverse Fundamental Traffic Channel gating mode in Radio Configurations 3, 4, 5, and 6, the mobile station shall set this field to '1'; otherwise, the mobile station shall set this field to '0'.

STS_SUPPORTED – STS supported indicator.

If $P\_REV\_IN\_USE_S$ is less than seven, the mobile station shall omit this field; otherwise, the mobile station shall include this field and set it as follows.

The mobile station shall set this field to '1' if the mobile station supports Space Time Spreading Transmit Diversity; otherwise, the mobile station shall set this field to '0'.

3X_CCH_SUPPORTED – 3X Common Channels supported.

If $P\_REV\_IN\_USE_S$ is less than seven, the mobile station shall omit this field; otherwise, the mobile station shall include this field and set it as follows.

The mobile station shall set this field to '1' if the mobile station supports the Spreading Rate 3 common channels (3X BCCH, 3X F-CCCH, and 3X R-EACH); otherwise, the mobile station shall set this field to '0'.

WLL_INCL - WLL information included indicator.

If $P\_REV\_IN\_USE_S$ is less than seven, the mobile station shall omit this field; otherwise, the mobile station shall include this field and set it as follows.

If the mobile station is a Wireless Local Loop device, the mobile station shall set this field to '1'; otherwise, the mobile station shall set this field to '0'.

WLL_DEVICE_TYPE – WLL device type indicator.

If WLL_INCL is not included, or if WLL_INCL is included and is set to '0', the mobile station shall omit this field; otherwise, the mobile station shall set this field as follows.

The mobile station shall set this field to the WLL_DEVICE_TYPE value shown in Table 2.7.1.3.2.1-3 corresponding to the mobile station device type.

HOOK_STATUS – WLL terminal hook status.

If WLL_INCL is not included, or if WLL_INCL is included and is set to '0', the mobile station shall omit this field; otherwise, the mobile station shall set this field to the value shown in Table 2.7.1.3.2.1-4 corresponding to the hook state.

ENC_INFO_INCL – Encryption fields included.

If $P\_REV\_IN\_USE_S$ is less than seven, the mobile station shall omit this field; otherwise, the mobile station shall include this field and set it as follows:

The mobile station shall set this field to ‘1’ if the encryption related fields are included; otherwise the mobile station shall set this field to ‘0’. The mobile station shall set this field to ‘0’ if the base station does not support encryption or the mobile station does not support any of the encryption modes supported by the base station.

SIG_ENCRYPT_SUP – Signaling encryption supported indicator.

If ENC_INFO_INCL is included and is set to ‘1’, the mobile station shall include this field; otherwise, the mobile station shall omit this field. If this field is included, the mobile station shall set this field to indicate which signaling encryption algorithms are supported by the mobile station.

This field consists of the subfields shown in Table 2.7.1.3.2.1-5.

If this field is included, the mobile station shall set the subfields as follows:

The mobile station shall set the CMEA subfield to ‘1’.

The mobile station shall set each other subfield to ‘1’ if the corresponding signaling encryption algorithm is supported by the mobile station; otherwise, the mobile station shall set the subfield to ‘0’.

The mobile station shall set the RESERVED subfield to ‘00000’.

D_SIG_ENCRYPT_REQ – Dedicated channel signaling encryption request indicator.

If ENC_INFO_INCL is included and is set to ‘1’, the mobile station shall include this field; otherwise, the mobile station shall omit this field. If this field is included, the mobile station shall set this field to ‘1’ to request signaling encryption to be turned on for signaling messages sent on f-dsch and r-dsch, and to ‘0’ to request signaling encryption to be turned off for signaling messages sent on f-dsch and r-dsch.

C_SIG_ENCRYPT_REQ – Common channel signaling encryption request indicator.

If ENC_INFO_INCL is included and is set to ‘1’, the mobile station shall include this field; otherwise, the mobile station shall omit this field. If this field is included, the mobile station shall set this field to ‘1’ to request signaling encryption to be turned on for signaling messages sent on f-csch and r-csch, and to ‘0’ to request signaling encryption to be turned off for signaling messages sent on f-csch and r-csch.

NEW_SSEQ_H – The 24-bit value used to initialize the 24 MSB of the crypto-sync.

If SIG_ENCRYPT_SUP is included and the ECMEA or REA subfield in SIG_ENCRYPT_SUP is set to ‘1’, the mobile station shall include this field; otherwise, the mobile station shall omit this field. If this field is included, the mobile station shall set this field to a 24-bit value that will be used as the initial value of the 24 MSB of the crypto-sync for both forward and reverse link message encryption and integrity (if message integrity is performed).

NEW_SSEQ_H_SIG - The signature of NEW_SSEQ_H

If the NEW_SSEQ_H field is included in the message, the mobile station shall set this field to the digital signature of the NEW_SSEQ_H as described in 2.3.12.4.5; otherwise, the mobile station shall omit this field.

UI_ENCRYPT_REQ – Request for user information encryption on the traffic channel indicator.

If ENC_INFO_INCL is included and is set to ‘1’, the mobile station shall include this field; otherwise, the mobile station shall omit this field. If this field is included, the mobile station shall set this field to ‘1’ to request user information encryption, and to ‘0’ to request no user information encryption.

UI_ENCRYPT_SUP – User information encryption supported indicator.

If ENC_INFO_INCL is included and is set to ‘1’, the mobile station shall include this field; otherwise, the mobile station shall omit this field. If this field is included, the mobile station shall set this field to indicate the supported user information encryption algorithms.

This field consists of the subfields shown in Table 2.7.1.3.2.4-9.

The mobile station shall set each subfield to ‘1’ if the corresponding user information encryption algorithm is supported by the mobile station; otherwise, the mobile station shall set the subfield to ‘0’.

The mobile station shall set the RESERVED subfield to ‘000000’.

SYNC_ID_INCL - Service Configuration synchronization identifier included indicator.

If $P\_REV\_IN\_USE_S$ is less than seven, the mobile station shall omit this field; otherwise, the mobile station shall include this field and set it as follows.

The mobile station shall set this field to ‘1’ if the SYNC_ID field is included in this message; otherwise, the mobile station shall set this field to ‘0’.

If $SYNC\_ID\_SUPPORTED_S$ is equal to '0', the mobile station shall set this field to '0'.

SYNC_ID_LEN - Service Configuration synchronization identifier length indicator.

If the SYNC_ID_INCL field is not included or is included and is set to '0', the mobile station shall omit this field; otherwise the mobile station shall include this field and set it as follows:

The mobile station shall set this field to the length of the SYNC_ID field included in this message.

SYNC_ID - Service Configuration synchronization identifier.

If the SYNC_ID_INCL field is not included, or is included and is set to '0', the mobile station shall omit this field; otherwise, the mobile station shall include this field and set it as follows:

The mobile station shall set this field to the Service Configuration synchronization identifier corresponding to the stored service configuration.

SO_BITMAP_IND - SO bitmap indicator.

If $P\_REV\_IN\_USE_S$ is less than 7, the mobile station shall omit this field; otherwise, the mobile station shall include this field and set this field as defined in Table 2.7.1.3.2.4-10.

SO_GROUP_NUM - The service option group number.

If SO_BITMAP_IND is included and not set to '00', the mobile station shall include this field and set this field to service option group number of the bitmap to be included in this message; otherwise, the mobile station shall omit this field.

SO_BITMAP - Service option bitmap.

If the field SO_BITMAP_IND field is included and is not set to '00', the mobile station shall include the bitmap of the service option group (SO_GROUP_NUM); otherwise, the mobile station shall omit this field.

When the service option bitmap is included, if there are more than (2^(1+SO_BITMAP_IND)) service options defined for the service option group, the mobile station shall include the bitmap containing the least significant bits (2^(1+ SO_BITMAP_IND)) of the service option group.

The mobile station shall set a bit in this bitmap to '1', if the mobile station is capable of supporting the service option for which the bit represents; otherwise, the mobile station shall set a bit in this bitmap to '0'.

ALT_BAND_CLASS_SUP – Alternate band class support indicator.

If $P\_REV\_IN\_USE_S$ is less than eight, then the mobile station shall omit this field; otherwise, the mobile station shall include this field and set it as follows:

If $BAND\_CLASS\_INFO\_REQ_S$ is equal to '1' and the mobile station supports the CDMA band class specified by $ALT\_BAND\_CLASS_S$, then the mobile station shall set this field to '1'; otherwise, the mobile station shall set this field to '0'.

MSG_INT_INFO_INCL - Signaling message integrity information included indicator.

If $P\_REV\_IN\_USE_S$ is less than nine, the mobile station shall omit this field; otherwise, the mobile station shall include this field and set it as follows.

If $MSG\_INTEGRITY\_SUP_S$ is set to '0', the mobile station shall set this field to '0'; otherwise, the mobile station shall set this field to '1'.

SIG_INTEGRITY_SUP_INCL - Signaling message integrity information included indicator.

If MSG_INT_INFO_INCL is included and is set to '1', the mobile station shall include this field and set it as follows; otherwise, the mobile station shall omit this field.

If the mobile station supports other integrity algorithm(s) in addition to the default integrity algorithm, the mobile station shall set this field to '1'; otherwise, the mobile station shall set this field to '0'.

SIG_INTEGRITY_SUP - Signaling integrity algorithm supported by the mobile station.

If SIG_INTEGRITY_SUP_INCL is included and is set to '1', the mobile station shall set this field as follows; otherwise, the mobile station shall omit this field.

The mobile station shall set this field to indicate the supported message integrity algorithms in addition to the default integrity algorithm.

This field consists of the subfields shown in Table 2.7.1.3.2.1-6.

The mobile station shall set each subfield to '1' if the corresponding message integrity algorithm is supported by the mobile station; otherwise, the mobile station shall set the subfield to '0'.

The mobile station shall set the RESERVED subfield to '00000000'.

SIG_INTEGRITY_REQ - Signaling message integrity algorithm requested by the mobile station.

If SIG_INTEGRITY_SUP_INCL is included and is set to '1', the mobile station shall set this field as follows; otherwise, the mobile station shall omit this field.

The mobile station shall include this field and set it to the value corresponding to the message integrity algorithm requested as shown in Table 2.7.1.3.2.1-7.

NEW_KEY_ID - New key identifier.

If MSG_INT_INFO_INCL is included and is set to '1', the mobile station shall include this field and set it as follows; otherwise, the mobile station shall omit this field.

The mobile station shall set this field as follows:

- If LAST_2G_KEY_ID equals '00', the mobile station shall set this field to '01'.
- If LAST_2G_KEY_ID equals '01', the mobile station shall set this field to '00'.

NEW_SSEQ_H_INCL - The include indicator of the 24 MSB of the security sequence number.

If MSG_INT_INFO_INCL is included and is set to '1', the mobile station shall include this field and set it as follows; otherwise, the mobile station shall omit this field.

The mobile station shall set this field to '0' if any of the following is true:

- If SIG_ENCRYPT_SUP is included and the ECMEA or REA subfield in SIG_ENCRYPT_SUP is set to '1'
- RESTORE_KEYS is equal to '1'.

In all other cases, the mobile station shall set this field to '1'.

NEW_SSEQ_H - The 24-bit value used to initialize the 24 MSB of the crypto-sync.

If NEW_SSEQ_H_INCL is included and is set to '1', the mobile station shall include this field and set this field as follows; otherwise, the mobile station shall omit this field.

The mobile station shall set this field to a 24-bit value that will be used as the initial value of the 24 MSB of the crypto-sync for both forward and reverse link message integrity.

NEW_SSEQ_H_SIG - The signature of NEW_SSEQ_H

If NEW_SSEQ_H_INCL is included and is set to '1', the mobile station shall include this field and set this field as follows; otherwise, the mobile station shall omit this field.

The mobile station shall set this field to the digital signature of the NEW_SSEQ_H computed as described in 2.3.12.4.5.

FOR_PDCH_SUPPORTED - Forward Packet Data Channel supported indicator.

If $P\_REV\_IN\_USE_S$ is less than nine, the mobile station shall omit this field; otherwise, the mobile station shall include this field and set it as follows.

If the mobile station supports the Forward Packet Data Channel, then the mobile station shall set this field to '1'; otherwise, the mobile station shall set this field to '0'.

FOR_PDCH Capability

Type-specific fields - Forward Packet Data Channel capability information.

If the FOR_PDCH_SUPPORTED field is included and is set to '1', the mobile station shall include this field and set it as defined in 2.7.4.27.5; otherwise, the mobile station shall omit this field.

EXT_CH_IND - Extended Channel Indicator.

If the CH_IND field is not included or is included but is not set to '00', the mobile station shall omit this field; otherwise, the mobile station shall include this field and set it as follows.

The mobile station shall set this field as shown in Table 2.7.1.3.2.4-11 to request a physical resource.

SIGN_SLOT_CYCLE_INDEX – Sign of the slot cycle index.

If $P\_REV\_IN\_USE_S$ is less than 11, or if the SLOT_CYCLE_INDEX field is set to '000', the mobile station shall omit this field; otherwise, the mobile station shall include this field and set it as follows:

The mobile station shall set this field as specified in Table 2.7.1.3.2.1-8 to the sign of the preferred slot cycle index, $SLOT\_CYCLE\_INDEX_p$ (see 2.6.2.1.1). The absolute value of the preferred slot cycle index, $SLOT\_CYCLE\_INDEX_p$, is specified in the SLOT_CYCLE_INDEX field of this message.

BCMC_INCL - BCMC information included indicator

If the $P\_REV\_IN\_USE_S$ is less than 11, the mobile station shall omit this field; otherwise, the mobile station shall include this field and set it as follows:

The mobile station shall set this field to '1' if one or more BCMC_PROGRAM_IDs are included in the message; otherwise, the mobile station shall set this field to '0'.

BCMC_PREF_INCL - BCMC preference included indicator

If the BCMC_INCL field is not included or is included and is set to '0', the mobile station shall omit this field; otherwise, the mobile station shall include this field and set it as follows:

The mobile station shall set this field to '1' if BCMC preference information is included in this message; otherwise, the mobile station shall set this field to '0'.

FUNDICATED_BCMC_SUPPORTED - Fundicated BCMC capability type-specific supported indicator.

If the BCMC_INCL field is not included or is included and is set to '0', the mobile station shall omit this field; otherwise, the mobile station shall include this field and set it as follows.

If the mobile station supports Fundicated BCMC channel configurations, the mobile station shall set this field to '1'; otherwise, the mobile station shall set this field to '0'.

FUNDICATED_BCMC Capability

Type-specific fields - FUNDICATED_BCMC capability information.

If the FUNDICATED_BCMC_SUPPORTED field is included and is set to '1', the mobile station shall include this field and set it as defined in 2.7.4.27.7; otherwise, the mobile station shall omit this field.

AUTH_SIGNATURE_INCL - Authorization signature included indication.

If the BCMC_INCL field is not included or is included and is set to '0', the mobile station shall omit this field; otherwise, the mobile station shall include this field and set it as follows.

The mobile station shall set this field to '1' to indicate that the authorization signature is included in this message for each of the BCMC flows included in this message; otherwise, the mobile station shall set this field to '0'.

TIME_STAMP_SHORT_LENGTH - Length of time stamp included in this message.

If the AUTH_SIGNATURE_INCL field is not included or is included and is set to '0', the mobile station shall omit this field; otherwise, the mobile station shall include this field and set it as follows:

The mobile station shall set this field to the length of the time stamp, in units of bits, included in this message.

TIME_STAMP_SHORT - Time stamp short.

If the AUTH_SIGNATURE_INCL field is not included or is included and is set to '0', the mobile station shall omit this field; otherwise, the mobile station shall include this field and set it as follows:

The mobile station shall set this field to the TIME_STAMP_SHORT_LENGTH least significant bits of the time stamp parameter used to generate the Authorization signature included in this message.

NUM_BCMC_PROGRAMS - Number of BCMC Programs

If the BCMC_INCL field is not included or is included and is set to '0', the mobile station shall omit this field; otherwise, the mobile station shall include this field and set it as follows:

The mobile station shall set this field to the number of BCMC programs included in this message minus 1.

The mobile station shall include NUM_BCMC_PROGRAMS+1 occurrences of the following variable length record:

BCMC_PROGRAM_ID_LEN - Length of BCMC_PROGRAM_ID field

The mobile station shall set this field to one less than the length, in bits, of the BCMC_PROGRAM_ID of this program.

BCMC_PROGRAM_ID - BCMC program Identifier

The length of this field shall be one more than the value of BCMC_PROGRAM_ID_LEN bits.

The mobile station shall set this field to the identifier of the BCMC program corresponding to one or more flows that the mobile station is requesting.

BCMC_FLOW_DISCRIMINATOR_LEN - Length of BCMC_FLOW_DISCRIMINATOR field

The mobile station shall set this field to the length, in bits, of the BCMC_FLOW_DISCRIMINATOR of this program. To request all flows associated with this BCMC_PROGRAM_ID, the mobile station may set this field to '000'.

NUM_FLOW_DISCRIMINATOR - Number of BCMC flow discriminators

The length of this field shall be determined by the value of the BCMC_FLOW_DISCRIMINATOR_LEN as follows: if BCMC_FLOW_DISCRIMINATOR_LEN is set to '000', this field is omitted; otherwise, the length of this field shall be BCMC_FLOW_DISCRIMINATOR_LEN bits.

The mobile station shall set this field to the number of flow discriminators included for this program minus one.

If NUM_FLOW_DISCRIMINATOR field is included, the mobile station shall include NUM_FLOW_DISCRIMINATOR+1 occurrences of the following variable length record; otherwise, the mobile station shall include 1 occurrence of the following variable length record:

BCMC_FLOW_DISCRIMINATOR – BCMC Flow discriminator.

The length of this field shall be determined by the value of the BCMC_FLOW_DISCRIMINATOR_LEN as follows: if BCMC_FLOW_DISCRIMINATOR_LEN is set to '000', this field is omitted; otherwise, the length of this field shall be BCMC_FLOW_DISCRIMINATOR_LEN bits.

The mobile station shall set this field to the BCMC flow discriminator requested.

BCMC_PREF - BCMC preference indicator

If the BCMC_PREF_INCL field is not included or is included and is set to '0', the mobile station shall omit this field; otherwise, the mobile station shall include this field and set it as follows:

The mobile station shall set this field to '1' to indicate that the mobile station has higher preference for this BCMC flow than the incoming call for which this message is sent; otherwise, the mobile station shall set this field to '0'.

AUTH_SIGNATURE_IND - Authorization signature indicator.

If the AUTH_SIGNATURE_INCL field is not included or is included and is set to '0', the mobile station shall omit this field; otherwise, the mobile station shall include this field and set it as follows:

The mobile station shall set this field to '1' to indicate that the authorization signature is included in this message for this BCMC flow; otherwise, the mobile station shall set this field to '0'.

AUTH_SIGNATURE_SAME_IND - Authorization signature same as previous BCMC flow indicator.

If the AUTH_SIGNATURE_IND field is not included or is included and is set to '0', the mobile station shall omit this field; otherwise, the mobile station shall include this field and set it as follows:

The mobile station shall set this field to '1' to indicate that the authorization signature generated for this BCMC flow is the same as the one generated for the BCMC flow listed prior to this BCMC flow in this message; otherwise, the mobile station shall set this field to '0'.

For the first BCMC flow listed in this message, the mobile station shall set this field to '0'.

BAK_ID - BAK identifier.

If the AUTH_SIGNATURE_SAME_IND field is not included or is included and is set to '1', the mobile station shall omit this field; otherwise, the mobile station shall include this field and set it as follows:

The mobile station shall set this field to BAK identifier used to generate the Authorization signature included in this message.

AUTH_SIGNATURE - Authorization signature.

If the AUTH_SIGNATURE_SAME_IND field is not included or is included and is set to '1', the mobile station shall omit this field; otherwise, the mobile station shall include this field and set it as follows:

The mobile station shall set this field to the Authorization signature computed for this BCMC flow as specified in 2.6.13.9.

REV_PDCH_SUPPORTED - Reverse Packet Data Channel supported indicator.

If $P\_REV\_IN\_USE_S$ is less than 11 or FOR_PDCH_SUPPORTED is not included or is included and is set to '0', the mobile station shall omit this field; otherwise, the mobile station shall include this field and set it as follows.

If the mobile station supports the Reverse Packet Data Channel (R-PDCH), the mobile station shall set this field to '1'; otherwise, the mobile station shall set this field to '0'.

REV_PDCH Capability Type-specific fields - Reverse Packet Data Channel capability information.

If the REV_PDCH_SUPPORTED field is included and is set to '1', the mobile station shall include this field and set it as defined in 2.7.4.27.6; otherwise, the mobile station shall omit this field.

BAND_SUB_REP_INCL – Band class – band subclass report included

If $P\_REV\_IN\_USE_S$ is less than eleven, the mobile station shall omit this field; otherwise, the mobile station shall include this field and set it as follows:

If $CAND\_BAND\_INFO\_REQ_S$ is equal to '1' and the mobile station supports at least 1 band class and band subclass (if applicable) combination queried by the base station, the mobile station shall set this field to '1'; otherwise, the mobile station shall set this field to '0'.

NUM_BAND_SUBCLASS – Number of band class - band subclass capabilities reported

If BAND_SUB_REP_INCL is set to '0' or is not included, this field shall be omitted; otherwise, the mobile station shall include this field and set it as follows:

If the mobile station supports all candidate band class and band subclass (if applicable) combinations queried by the base station, the mobile station shall set this field to '0000'; otherwise, the mobile station shall set this field to the number of band class-band subclass capabilities reported.

If the NUM_BAND_SUBCLASS field is included in this message, the mobile station shall include NUM_BAND_SUBCLASS occurrences of the BAND_SUBCLASS_SUP field:

BAND_SUBCLASS_SUP – Band class-band subclass supported indicator

The mobile station shall set this field as specified in section 2.6.14.1.

2.7.1.3.2.6 Authentication Challenge Response Message

MSG_TAG: AUCRM

Field	Length (bits)
AUTHU	18

AUTHU – Authentication challenge response.

The mobile station shall set this field as specified in 2.3.12.1.4.

2.7.1.3.2.7 Status Response Message

MSG_TAG: STRPM

Field	Length (bits)
QUAL_INFO_TYPE	8
QUAL_INFO_LEN	3
Type-specific fields	8 × QUAL_INFO_LEN

One or more occurrences of the following record:

{

RECORD_TYPE	8
RECORD_LEN	8
Type-specific fields	8 × RECORD_LEN

}

QUAL_INFO_TYPE – Qualification information type.

The mobile station shall set this field to the QUAL_INFO_TYPE field in the corresponding *Status Request Message*.

QUAL_INFO_LEN – Qualification information length.

The mobile station shall set this field to the QUAL_INFO_LEN field in the corresponding *Status Request Message*.

Type-specific fields – Type-specific fields.

The mobile station shall set these fields to the qualification information in the corresponding *Status Request Message*.

The mobile station shall include all the records requested in the corresponding *Status Request Message*. The mobile station shall include one occurrence of the following fields for each information record to be included:

RECORD_TYPE – Information record type.

The mobile station shall set this field to the record type value shown in Table 2.7.4-1 corresponding to the type of this information record.

RECORD_LEN – Information record length.

The mobile station shall set this field to the number of octets included in the type-specific fields of this information record.

Type-specific fields – Type-specific fields.

The mobile station shall set these fields to the information as specified in 2.7.4 for the specific type of records. The mobile station shall only specify the information corresponding to the included qualification information.

2.7.1.3.2.8 TMSI Assignment Completion Message

MSG_TAG: TACM

There are no Layer 3 fields associated with this message.

2.7.1.3.2.9 PACA Cancel Message

MSG_TAG: PACNM

There are no Layer 3 fields associated with this message.

2.7.1.3.2.10 Extended Status Response Message

MSG_TAG: ESTRPM

Field	Length (bits)
QUAL_INFO_TYPE	8
QUAL_INFO_LEN	3
Type-specific fields	8 × QUAL_INFO_LEN
NUM_INFO_RECORDS	4

NUM_INFO_RECORDS occurrences of the following record:

{ (NUM_INFO_RECORDS)

RECORD_TYPE	8
RECORD_LEN	8
Type-specific fields	8 × RECORD_LEN

} (NUM_INFO_RECORDS)

QUAL_INFO_TYPE – Qualification information type.

The mobile station shall set this field to the QUAL_INFO_TYPE field in the corresponding *Status Request Message*.

QUAL_INFO_LEN – Qualification information length.

The mobile station shall set this field to the QUAL_INFO_LEN field in the corresponding *Status Request Message*.

Type-specific fields – Type-specific fields.

The mobile station shall set these fields to the qualification information in the corresponding *Status Request Message*.

NUM_INFO_RECORDS – Number of information records included.

The mobile station shall set this field to the number of information records which are included. The mobile station shall include all the records requested in the corresponding *Status Request Message*.

The mobile station shall include one occurrence of the following fields for each information record which is included:

RECORD_TYPE – Information record type.

The mobile station shall set this field to the record type value shown in Table 2.7.4-1 corresponding to the type of this information record.

RECORD_LEN – Information record length.

The mobile station shall set this field to the number of octets included in the type-specific fields of this information record.

Type-specific fields – Type-specific fields.

The mobile station shall set these fields to the information as specified in 2.7.4 for the specific type of records. The mobile station shall only specify the information corresponding to the included qualification information.

2.7.1.3.2.11 Device Information Message

MSG_TAG: DIM

Field	Length (bits)
WLL_DEVICE_TYPE	3
NUM_INFO_RECORDS	5

NUM_INFO_RECORDS occurrences of the following record:

{ (NUM_INFO_RECORDS)

RECORD_TYPE	8
RECORD_LEN	8
Type-specific fields	8 × RECORD_LEN

} (NUM_INFO_RECORDS)

WLL_DEVICE_TYPE – WLL device type indicator.

The mobile station shall set this field to the WLL_DEVICE_TYPE value shown in Table 2.7.1.3.2.1-3 corresponding to the mobile station device type.

NUM_INFO_RECORDS – Number of information records included.

The mobile station shall set this field to the number of information records which are included.

The mobile station shall include one occurrence of the following fields for each information record which is included:

RECORD_TYPE – Information record type.

The mobile station shall set this field to the record type code shown in Table 2.7.4-1 corresponding to the type of this information record.

RECORD_LEN – Information record length.

The mobile station shall set this field to the number of octets in the type-specific fields of this record.

Type-specific fields – Type-specific fields.

The mobile station shall set these fields as specified in 2.7.4 for this type of information record.

2.7.1.3.2.12 Security Mode Request Message

MSG_TAG: SMRM

Field	Length (bits)
UI_ENC_INCL	1
UI_ENCRYPT_SUP	0 or 8
SIG_ENC_INCL	1
SIG_ENCRYPT_SUP	0 or 8
C_SIG_ENCRYPT_REQ	0 or 1
NEW_SSEQ_H_INCL	1
NEW_SSEQ_H	0 or 24
NEW_SSEQ_H_SIG	0 or 8
MSG_INT_INFO_INCL	1
SIG_INTEGRITY_SUP_INCL	0 or 1
SIG_INTEGRITY_SUP	0 or 8
SIG_INTEGRITY_REQ	0 or 3

UI_ENC_INCL – User information encryption fields included.

The mobile station shall set this field to ‘1’ if the user information encryption related fields are included in this message; otherwise, the mobile station shall set this field to ‘0’.

UI_ENCRYPT_SUP – User information encryption supported indicator.

If UI_ENC_INCL is equal to ‘1’, the mobile station shall include this field; otherwise, the mobile station shall omit this field. If this field is included, the mobile station shall set this field to indicate the supported user information encryption algorithms.

This field consists of the subfields shown in Table 2.7.1.3.2.4-9.

The mobile station shall set each subfield to ‘1’ if the corresponding user information encryption algorithm is supported by the mobile station; otherwise, the mobile station shall set the subfield to ‘0’.

The mobile station shall set the RESERVED subfield to ‘000000’.

SIG_ENC_INCL – Signaling encryption fields included.

The mobile station shall set this field to '1' if the following two fields related to signaling encryption fields are included in this message; otherwise, the mobile station shall set this field to '0'.

SIG_ENCRYPT_SUP – Signaling encryption supported indicator.

If SIG_ENC_INCL is equal to '1', the mobile station shall include this field; otherwise, the mobile station shall omit this field. If this field is included, the mobile shall set this field to indicate the supported signaling encryption algorithms supported by the mobile station.

This field consists of the subfields shown in Table 2.7.1.3.2.1-5.

If this field is included, the mobile station shall set the subfields as follows:

The mobile station shall set the CMEA subfield to '1'.

The mobile station shall set each other subfield to '1' if the corresponding signaling encryption algorithm is supported by the mobile station; otherwise, the mobile station shall set the subfield to '0'.

The mobile station shall set the RESERVED subfield to '00000'.

C_SIG_ENCRYPT_REQ – Common channel signaling encryption request indicator.

If SIG_ENC_INCL is equal to '1', the mobile station shall include this field; otherwise, the mobile station shall omit this field. If this field is included, the mobile station shall set this field to '1' to request signaling encryption to be turned on for signaling messages sent on f-csch and r-csch, and to '0' to request signaling encryption to be turned off for signaling messages sent on f-csch and r-csch.

NEW_SSEQ_H_INCL – The NEW_SSEQ included indicator.

The mobile station shall set this field to '1' if NEW_SSEQ_H is included in this message; otherwise, the mobile station shall set this field to '0'.

If $MSG\_INTEGRITY\_SUP_S$ is equal to '0', the mobile station shall set this field to '1' if the mobile station is to include the NEW_SSEQ_H and NEW_SSEQ_H_SIG fields.

If $MSG\_INTEGRITY\_SUP_S$ is equal to '1', the mobile station shall set this field to '0'.

NEW_SSEQ_H – The 24-bit value used to initialize the 24 MSB of crypto-sync.

If NEW_SSEQ_H_INCL is set to '1', the mobile station shall include this field; otherwise, the mobile station shall omit this field. If this field is included, the mobile station shall set this field to a 24-bit value that will be used as the initial value of the 24 MSB of the crypto-sync for both forward and reverse link message encryption and integrity.

NEW_SSEQ_H_SIG – The signature of NEW_SSEQ_H

If NEW_SSEQ_H is included, the mobile station shall include this field; otherwise, the mobile station shall omit this field. If this field is included, the mobile station shall set this field to the digital signature of the NEW_SSEQ_H computed as described in 2.3.12.4.5.

MSG_INT_INFO_INCL – Signaling message integrity information included indicator.

If $MSG\_INTEGRITY\_SUP_S$ is equal to ‘0’, the mobile station shall set this field to ‘0’; otherwise, the mobile station shall set this field to ‘1’.

SIG_INTEGRITY_SUP_INCL – Signaling message integrity information included indicator.

If MSG_INT_INFO_INCL is set to ‘0’, the mobile station shall omit this field; otherwise, the mobile station shall include this field and set it as follows:

If the mobile station supports other integrity algorithm(s) in addition to the default integrity algorithm, the mobile station shall set this field to ‘1’; otherwise, the mobile station shall set this field to ‘0’.

SIG_INTEGRITY_SUP - Signaling integrity algorithm supported by the mobile station.

If SIG_INTEGRITY_SUP_INCL is included and is set to ‘1’, the mobile station shall set this field as follows; otherwise, the mobile station shall omit this field.

The mobile station shall set this field to indicate the supported message integrity algorithm in addition to the default integrity algorithm.

This field consists of the subfields shown in Table 2.7.1.3.2.1-6.

The mobile station shall set each subfield to ‘1’ if the corresponding message integrity algorithm is supported by the mobile station; otherwise, the mobile station shall set the subfield to ‘0’.

The mobile station shall set the RESERVED subfield to ‘00000000’.

SIG_INTEGRITY_REQ - Signaling message integrity algorithm requested by the mobile station.

If SIG_INTEGRITY_SUP_INCL is included and is set to ‘1’, the mobile station shall set this field as follows; otherwise, the mobile station shall omit this field.

The mobile station shall include this field and set it to the value corresponding to the message integrity algorithm requested as shown in Table 2.7.1.3.2.1-7.

2.7.1.3.2.13 Authentication Response Message

MSG_TAG: AURSPM

Field	Length (bits)
RES	128
SIG_INTEGRITY_SUP_INCL	1
SIG_INTEGRITY_SUP	0 or 8
SIG_INTEGRITY_REQ	0 or 3
NEW_KEY_ID	2
NEW_SSEQ_H	24

RES – The output, RES, of the User Authentication Function.

The mobile station shall set this field to the output, RES, of the function as specified in Figure 2.3.12.5.2-2. If the UIM returns a RES value with length smaller than 128, the mobile station shall store the RES value in the most significant bits of the RES field and pad the least significant bits with ‘0’s.

SIG_INTEGRITY_SUP_INCL – Signaling message integrity information included indicator.

If the mobile station supports other integrity algorithm(s) in addition to the default integrity algorithm, the mobile station shall set this field to ‘1’; otherwise, the mobile station shall set this field to ‘0’.

SIG_INTEGRITY_SUP – Signaling integrity algorithm supported indicator.

If SIG_INTEGRITY_SUP_INCL is set to ‘1’, the mobile station shall set this field as follows; otherwise, the mobile station shall omit this field.

The mobile station shall set this field to indicate the supported message integrity algorithms in addition to the default integrity algorithm.

This field consists of the subfields shown in Table 2.7.1.3.2.1-6.

The mobile station shall set each subfield to ‘1’ if the corresponding message integrity algorithm is supported by the mobile station; otherwise, the mobile station shall set the subfield to ‘0’.

The mobile station shall set the RESERVED subfield to ‘00000000’.

SIG_INTEGRITY_REQ – Signaling message integrity algorithm requested by the mobile station.

If SIG_INTEGRITY_SUP_INCL is set to ‘1’, the mobile station shall set this field as follows; otherwise, the mobile station shall omit this field.

The mobile station shall include this field and set it to the value corresponding to the message integrity algorithm requested as shown in Table 2.7.1.3.2.1-7.

NEW_KEY_ID – New key identifier.

The mobile station shall set this field as follows:

- If LAST_3G_KEY_ID equals ‘10’, the mobile station shall set this field to ‘11’.
- If LAST_3G_KEY_ID equals ‘11’, the mobile station shall set this field to ‘10’.

NEW_SSEQ_H – The 24-bit value used to initialize the 24 MSB of the crypto-sync.

The mobile station shall set this field to a 24-bit value that will be used as the initial value of the 24 MSB of the crypto-sync for both forward and reverse link message integrity.

2.7.1.3.2.14 Authentication Resynchronization Message

MSG_TAG: AURSYNM

Field	Length (bits)
CON_MS_SQN	48
MAC_S	64

CON_MS_SQN – The concealed sequence number of the authentication vector.

The mobile station shall set this field to the output, CON_MS_SQN, of the function as specified in Figure 2.3.12.5.2-3.

MAC_S – Message authentication code for resynchronization.

The mobile station shall set this field to the output, MAC_S, of the function as specified in Figure 2.3.12.5.2-3.

2.7.1.3.2.15 Reconnect Message

MSG_TAG: RCNM

Field	Length (bits)
ORIG_IND	1
SYNC_ID_INCL	1
SYNC_ID_LEN	0 or 4
SYNC_ID	0 or (8 × SYNC_ID_LEN)
SERVICE_OPTION	0 or 16
SR_ID	0 or 3
ADD_SERV_INSTANCE_INCL	0 or 1
NUM_ADD_SERV_INSTANCE	0 or 3
NUM_ADD_SERV_INSTANCE occurrences of the following record:	
{ (NUM_ADD_SERV_INSTANCE)	
ADD_SR_ID	3
} (NUM_ADD_SERV_INSTANCE)	
SDB_INCL	0 or 1
NUM_FIELDS	0 or 8
NUM_FIELDS occurrences of the following field:	
{ (NUM_FIELDS)	
CHARi	8
} (NUM_FIELDS)	

ORIG_IND – Origination indicator

If this message is being sent in place of an *Origination Message*, the mobile station shall set this field to ‘1’; if this message is being sent in place of a *Page Response Message*, the mobile station shall set this field to ‘0’.

SYNC_ID_INCL – Service Configuration synchronization identifier included indicator.

The mobile station shall set this field to ‘1’ if the SYNC_ID field is included in this message; otherwise, the mobile station shall set this field to ‘0’.

If $SYNC\_ID\_SUPPORTED_S$ is equal to ‘0’, the mobile station shall set this field to ‘0’.

SYNC_ID_LEN – Service Configuration synchronization identifier length indicator.

If the SYNC_ID_INCL field is set to ‘0’, the mobile station shall omit this field; otherwise, the mobile station shall include this field and set it as follows:

The mobile station shall set this field to the length of the SYNC_ID field included in this message.

SYNC_ID – Service Configuration synchronization identifier.

If the SYNC_ID_INCL field is set to ‘0’, the mobile station shall omit this field; otherwise, the mobile station shall include this field and set it as follows:

The mobile station shall set this field to the Service Configuration synchronization identifier corresponding to the stored service configuration.

SERVICE_OPTION – Service option number.

If the SYNC_ID_INCL field is set to ‘1’, the mobile station shall omit this field; otherwise, the mobile station shall include this field and set it as follows:

If the ORIG_IND field is set to ‘1’, the mobile station shall set this field to the service option number corresponding to the service being reconnected.

If the ORIG_IND field is set to ‘0’, the mobile station shall set this field as follows:

- If the mobile station accepts the service option specified by the mobile-station-addressed page, the mobile station shall set this field to the service option number specified in the SERVICE OPTION field of the page record to which the mobile station is responding.
- If the mobile station does not accept the service option specified by the mobile-station-addressed page to which the mobile station is responding and the mobile station has an alternative service option to request, the mobile station shall set this field to the service option code specified in [30] corresponding to the alternative service option.
- If the mobile station does not accept the service option specified by the mobile-station-addressed page to which the mobile station is responding and the mobile station does not have an alternative service option to request, the mobile station shall set this field to ‘0000000000000000’ to reject the service option specified by the page record of

the *General Page Message* or *Universal Page Message* to which the mobile station is responding.

SR_ID – Service reference identifier.

If the ORIG_IND field is set to '0', the mobile station shall omit this field; otherwise, the mobile station shall include this field and set it as follows.

If the SYNC_ID_INCL field is set to '0', the mobile station shall set this field as follows:

- If the service instance provides a service reference identifier, the mobile station shall set this field to the service reference identifier specified by the service instance. If the service instance does not provide a service reference identifier, the mobile station shall set this field to the smallest unused service reference identifier value between 1 and 6 (inclusive).

Otherwise, the mobile station shall set this field as follows:

- If the mobile station requests the restoration of a single service option connection from the stored service configuration, the mobile station shall set this field to the corresponding service reference identifier
- If the mobile station requests the restoration of more than one but not all service option connections from the stored service configuration, the mobile station shall set this field to the service reference identifier corresponding to one of the service option connections to be restored.
- Otherwise (that is, the mobile station requests the restoration of all the service option connections from the stored service configuration), the mobile station shall set this field to '111'.

ADD_SERV_INSTANCE_INCL- Additional service instances included indicator.

If the ORIG_IND field is set to '0' or $P\_REV\_IN\_USE_S$ is less than 11 or if SYNC_ID_INCL is set to '0' or if SR_ID is included and set to '111', the mobile station shall omit this field; otherwise, the mobile station shall include this field and set it as follows:

If at least one occurrence of the ADD_SR_ID field is included in this message, the mobile station shall set this field to '1'; otherwise, the mobile station shall set this field to '0'.

NUM_ADD_SERV_INSTANCE - Number of additional service instances included.

If ADD_SERV_INSTANCE_INCL is not included or is included and set to '0', the mobile station shall omit this field; otherwise, the mobile station shall include this field and set it to the number of additional service instances included in this message.

If ADD_SERV_INSTANCE_INCL is included and set to '1', the mobile station shall include NUM_ADD_SERV_INSTANCE occurrences of the following record:

ADD_SR_ID – Additional service reference identifier.

The mobile station shall set this field to the service reference identifier corresponding to the service option connection that the mobile station requests to be restored from the stored service configuration.

SDB_INCL – Short Data Burst included indicator.

If $P\_REV\_IN\_USE_S$ is less than eleven, the mobile station shall omit this field; otherwise, the mobile station shall include this field and set it as follows:

If a Short Data Burst (i.e., data burst message with burst type equal to '000110', see [30]) is being included in this message, the mobile station shall set this field to '1'; otherwise, the mobile station shall set this field to '0'.

The mobile station shall set this field to '0' if $SDB\_IN\_RCNM\_IND_S$ or $SDB\_SUPPORTED_S$ is equal to '0'.

NUM_FIELDS – Number of characters in this message.

If SDB_INCL is set to '0', the mobile station shall omit this field; otherwise, the mobile station shall include this field and set it as follows:

The mobile station shall set this field to the number of CHARi fields included in this message.

If SDB_INCL is included and set to '1', the mobile station shall include NUM_FIELDS occurrences of the following record:

CHARi – Character.

The mobile station shall set these fields to the corresponding octet of the data burst stream.

2.7.1.3.2.16 Radio Environment Message

MSG_TAG: REM

Field	Length (bits)
MODE_DISABLED	1
TKZ_MODE_IND	1

MODE_DISABLED - Mode disabled indicator.

The mobile station shall set this field to ‘1’ if any of the following conditions is true:

- RER_COUNT is equal to (RER_MAX_NUM_MSG$_S$ – 1) and the TKZ_MODE_IND field in this message is set to ‘0’, or
- TKZ_COUNT is equal to (TKZ_MAX_NUM_MSG$_S$ – 1) and the TKZ_MODE_IND field in this message is set to ‘1’.

Otherwise, the mobile station shall set this field to ‘0’.

TKZ_MODE_IND - Tracking zone mode indicator.

The mobile station shall set this field to ‘1’ if the *Radio Environment Message* is sent for tracking zone mode; otherwise, the mobile station shall set this field to ‘0’.

2.7.1.3.2.17 Call Recovery Request Message

MSG_TAG: CRRM

There are no Layer 3 fields associated with this message.

2.7.1.3.2.18 General Extension Message

MSG_TAG: GEM

Field	Length (bits)
NUM_GE_REC	8

NUM_GE_REC occurrences of the following record:

{ (NUM_* GE_REC)*

GE_REC_TYPE	8
GE_REC_LEN	8
GE_REC	8 x GE_REC_LEN

} (NUM_GE_REC)

MESSAGE_TYPE	8
MESSAGE_REC	variable

NUM_GE_REC - Number of General Extension Records included in this message.

The mobile station shall set this field to the number of general extension records included in this message. Mobile station shall set this field to a value greater than 0.

GE_REC_TYPE - Type of General Extension Record.

The mobile station shall set this field based on the type of record as specified in Table 2.7.1.3.2.17-1.

Table 2.7.1.3.2.17-1. General Extension Record Type values

GE_REC_TYPE (binary)	Description
00000000	Supported Band Class - Subclass
00000001-11111111	Reserved

GE_REC_LEN - Length of the General Extension Record.

The mobile station shall set this field to the length in octets of the general extension record following the GE_REC_LEN field.

GE_REC - General Extension Record.

The mobile station shall set this field according to the previous occurrence of the GE_REC_TYPE in this message. If the GE_REC_TYPE is set to '00000000' then the mobile station shall set the GE_REC to the following:

NUM_BAND_SUBCLASS	0 or 4

NUM_BAND_SUBCLASS occurrences of the following field:

{ (NUM_BAND_SUBCLASS)

BAND_SUBCLASS_SUP	1

} (NUM_BAND_SUBCLASS)

Reserved	0-7

NUM_BAND_SUBCLASS – Number of band class - band subclass capabilities reported

If the mobile station supports all candidate band class and band subclass (if applicable) combinations queried by the base station, the mobile station shall set this field to '0000'; otherwise, the mobile station shall set this field to the number of band class-band subclass capabilities reported.

If the NUM_BAND_SUBCLASS field is included in this message, the mobile station shall include NUM_BAND_SUBCLASS occurrences of the BAND_SUBCLASS_SUP field:

BAND_SUBCLASS_SUP – Band class - Band subclass supported indicator

The mobile station shall set this field as specified in section 2.6.14.1.

RESERVED - Reserved bits.

This field shall contain the number of bits required to make the entire GE_REC field an integer number of octets in length. All bits of this field shall be set to zeros.

MESSAGE_TYPE - Message type of the message included in the *General Extension Message*.

This field shall contain the message type value for the message following this field. When transmitting the general extension message over r-csch, then mobile station shall set the first 2 MSB of this field to '00'. The mobile station shall set this field according to [4].

MESSAGE_REC - Message extended through the General Extension message.

The mobile station shall set this field to the message that is being extended using the *General Extension Message*.

2.7.2 r-dsch

During Traffic Channel operation, the mobile station sends signaling messages to the base station using the r-dsch.

2.7.2.1 Reserved

2.7.2.2 Reserved

2.7.2.3 PDU Formats for Messages on r-dsch

The messages sent on the r-dsch are summarized in Table 2.7.2.3-1.

Table 2.7.2.3-1. Messages on r-dsch (Part 1 of 2)

Message Name	MSG_TAG	Section Number	P_REV_IN_USE[4]
Order Message	ORDM	2.7.2.3.2.1	All
Authentication Challenge Response Message	AUCRM	2.7.2.3.2.2	All
Flash With Information Message	FWIM	2.7.2.3.2.3	All
Data Burst Message	DBM	2.7.2.3.2.4	All
Pilot Strength Measurement Message	PSMM	2.7.2.3.2.5	< 7
Power Measurement Report Message	PMRM	2.7.2.3.2.6	All
Send Burst DTMF Message	BDTMFM	2.7.2.3.2.7	All
Status Message (Band Class 0 only)	STM	2.7.2.3.2.8	< 8
Origination Continuation Message	ORCM	2.7.2.3.2.9	All
Handoff Completion Message	HOCM	2.7.2.3.2.10	< 7
Parameters Response Message	PRSM	2.7.2.3.2.11	All
Service Request Message	SRQM	2.7.2.3.2.12	1, ≥ 3
Service Response Message	SRPM	2.7.2.3.2.13	1, ≥ 3
Service Connect Completion Message	SCCM	2.7.2.3.2.14	1, ≥ 3
Service Option Control Message	SOCM	2.7.2.3.2.15	1, ≥ 3
Status Response Message	STRPM	2.7.2.3.2.16	1, ≥ 3
TMSI Assignment Completion Message	TACM	2.7.2.3.2.17	1, ≥ 4
Supplemental Channel Request Message	SCRM	2.7.2.3.2.18	≥ 4

[4] P_REV_IN_USE equal to “All” implies all values applicable to the Band Class.

Table 2.7.2.3-1. Messages on r-dsch (Part 2 of 2)

Message Name	MSG_TAG	Section Number	P_REV_IN _USE
Candidate Frequency Search Response Message	CFSRSM	2.7.2.3.2.19	≥ 4
Candidate Frequency Search Report Message	CFSRPM	2.7.2.3.2.20	≥ 4
Periodic Pilot Strength Measurement Message	PPSMM	2.7.2.3.2.21	≥ 4
Outer Loop Report Message	OLRM	2.7.2.3.2.22	≥ 6
Resource Request Message	RRM	2.7.2.3.2.23	≥ 6
Resource Request Mini Message	RRMM	2.7.2.3.2.24	≥ 6
Extended Release Response Message	ERRM	2.7.2.3.2.25	≥ 6
Extended Release Response Mini Message	ERRMM	2.7.2.3.2.26	≥ 6
Pilot Strength Measurement Mini Message	PSMMM	2.7.2.3.2.27	≥ 6
Supplemental Channel Request Mini Message	SCRMM	2.7.2.3.2.28	≥ 6
Resource Release Request Message	RRRM	2.7.2.3.2.29	≥ 6
Resource Release Request Mini Message	RRRMM	2.7.2.3.2.30	≥ 6
User Zone Update Request Message	UZURM	2.7.2.3.2.31	≥ 6
Enhanced Origination Message	EOM	2.7.2.3.2.32	≥ 7
Extended Flash With Information Message	EFWIM	2.7.2.3.2.33	≥ 7
Extended Pilot Strength Measurement Message	EPSMM	2.7.2.3.2.34	≥ 7
Extended Handoff Completion Message	EHOCM	2.7.2.3.2.35	≥ 7
Security Mode Request Message	SMRM	2.7.2.3.2.36	≥ 7
Call Cancel Message	CLCM	2.7.2.3.2.37	≥ 7
Device Information Message	DIM	2.7.2.3.2.38	≥ 7
Base Station Status Request Message	BSSREQM	2.7.2.3.2.39	≥ 7
CDMA Off Time Report Message	COTRM	2.7.2.3.2.40	≥ 8
Authentication Response Message	AURSPM	2.7.2.3.2.41	≥ 10
Authentication Resynchronization Message	AURSYNM	2.7.2.3.2.42	≥ 10
ITBSPM Request Message	ITBSPMRM	2.7.2.3.2.43	≥ 11
Handoff Supplementary Information Notification Message	HOSINM	2.7.2.3.2.44	≥ 12
General Extension Message	GEM	2.7.1.3.2.45	≥ 12

2.7.2.3.1 Reserved

2.7.2.3.2 Message Body Contents

2.7.2.3.2.1 Order Message

MSG_TAG: ORDM

Field	Length (bits)
ORDER	6
ADD_RECORD_LEN	3
Order-specific fields (if used)	8 × ADD_RECORD_LEN
CON_REF_INCL	0 or 1
CON_REF	0 or 8

ORDER – Order code.

The mobile station shall set this field to the ORDER code. See 2.7.3.

ADD_RECORD_LEN – Additional record length.

The mobile station shall set this field to the number of octets in the order-specific fields included in this message.

Order-specific fields – Order-specific fields.

The mobile station shall include order-specific fields as specified in 2.7.3.

CON_REF_INCL – Connection reference included indicator.

If the order carried by this message is not a Call Control order (2.6.10), the mobile station shall omit this field; otherwise, the mobile station shall include this field and set it as follows:

The mobile station shall set this field to ‘1’ if the connection reference field is included in this message; otherwise, it shall set this field to ‘0’.

CON_REF – Connection reference.

If the CON_REF_INCL field is not included, or is included but is set to ‘0’, the mobile station shall omit this field; otherwise, the mobile station shall include this field and shall set it to the value of the connection reference assigned to the service option connection of the call, to which this message corresponds.

2.7.2.3.2.2 Authentication Challenge Response Message

MSG_TAG: AUCRM

Field	Length (bits)
AUTHU	18

AUTHU – Authentication challenge response.

The mobile station shall set this field as specified in 2.3.12.1.4.

2.7.2.3.2.3 Flash With Information Message

MSG_TAG: FWIM

Field	**Length (bits)**
Zero or more occurrences of the following record:	
{	
RECORD_TYPE	8
RECORD_LEN	8
Type-specific fields	8 × RECORD_LEN
}	

The mobile station shall include one occurrence of the following record for each information record to be included:

RECORD_TYPE – Information record type.

The mobile station shall set this field to the record type code shown in Table 2.7.4-1 corresponding to the type of this information record.

RECORD_LEN – Information record length.

The mobile station shall set this field to the number of octets in the type-specific fields of this record.

Type-specific fields – Type-specific fields.

The mobile station shall set these fields as specified in 2.7.4 for this type of information record.

2.7.2.3.2.4 Data Burst Message

MSG_TAG: DBM

Field	Length (bits)
MSG_NUMBER	8
BURST_TYPE	6
NUM_MSGS	8
NUM_FIELDS	8

NUM_FIELDS occurrences of the following field:

{ (NUM_FIELDS)

CHARi	8

} (NUM_FIELDS)

MSG_NUMBER – Message number within the data burst stream.

The mobile station shall set this field to the number of this message within the data burst stream.

BURST_TYPE – Data burst type.

The mobile station shall set the value of this field for the type of this data burst as defined in [30]. If the mobile station sets this field equal to '111110', it shall set the first two CHARi fields of this message equal to EXTENDED_BURST_TYPE_INTERNATIONAL as described in the definition of CHARi below. If the mobile station sets this field equal to '111111', it shall set the first two CHARi fields of this message equal to the EXTENDED BURST TYPE as described in the definition of CHARi below.

NUM_MSGS – Number of messages in the data burst stream.

The mobile station shall set this field to the number of messages within this data burst stream.

NUM_FIELDS – Number of characters in this message.

The mobile station shall set this field to the number of CHARi fields included in this message.

CHARi – Character.

The mobile station shall include NUM_FIELDS occurrences of this field. The mobile station shall set these fields to the corresponding octet of the data burst stream.

If the BURST_TYPE field of this message is equal to '111110', the first two CHARi octets shall represent a 16 bit EXTENDED_BURST_TYPE_INTERNATIONAL field, which is encoded as shown below. The first ten bits of this field contain a binary mapping of the Mobile Country Code (MCC) associated with the national standards organization administering the use of the remaining octets of the message. Encoding of the MCC shall be as specified in 2.3.1.3. The remaining six bits of the EXTENDED_BURST_TYPE_INTERNATIONAL field shall specify the COUNTRY_BURST_TYPE. The mobile station shall set the value of the COUNTRY_BURST_TYPE according to the type of this data burst as defined in standards governed by the country where this data burst type is to be used.

Field	**Length (bits)**
Mobile Country Code	10
COUNTRY_BURST_TYPE	6
Remaining CHARi fields	8 × (NUM_FIELDS - 2)

If the BURST TYPE field of this message is equal to '111111', the first two CHARi octets shall represent a single, 16 bit, EXTENDED BURST TYPE field, as shown below. The mobile station shall set the value of the EXTENDED BURST TYPE according to the type of this data burst as defined in [30].

Field	**Length (bits)**
EXTENDED_BURST_TYPE (first two CHARi fields)	16
Remaining CHARi fields	8 × (NUM_FIELDS - 2)

2.7.2.3.2.5 Pilot Strength Measurement Message

MSG_TAG: PSMM

Field	Length (bits)
REF_PN	9
PILOT_STRENGTH	6
KEEP	1

Zero or more occurrences of the following record:

{

PILOT_PN_PHASE	15
PILOT_STRENGTH	6
KEEP	1

}

REF_PN – Time reference PN sequence offset.

The mobile station shall set this field to the PN sequence offset of the pilot used by the mobile station to derive its time reference, relative to the zero offset pilot PN sequence in units of 64 PN chips.

PILOT_STRENGTH – Pilot strength in dB.

The mobile station shall set this field to

$$\lfloor -2 \times 10 \log_{10} PS \rfloor,$$

where PS is the strength of the pilot used by the mobile station to derive its time reference (see [2]), measured as specified in 2.6.6.2.2. If this value ($\lfloor -2 \times 10 \log_{10} PS \rfloor$) is less than 0, the mobile station shall set this field to '000000'. If this value is greater than '111111', the mobile station shall set this field to '111111'.

KEEP – Keep pilot indicator.

If the handoff drop timer (see 2.6.6.2.3) corresponding to the pilot used by the mobile station to derive its time reference (see [2]) has expired, the mobile station shall set this field to '0'; otherwise, the mobile station shall set this field to '1'.

If $P\_REV\_IN\_USE_S$ is less than or equal to three, the mobile station shall include one occurrence of the three-field record given below for each pilot in the Active Set and for each Candidate Set pilot reported (the number of Candidate Set pilots reported shall not exceed 5), other than the pilot identified by the REF_PN field. If $P\_REV\_IN\_USE_S$ is greater than

three and $SOFT\_SLOPE_S$ is equal to '000000', the mobile station shall include one occurrence of the three-field record given below for each pilot in the Active Set and for each pilot in the Candidate Set, other than the pilot identified by the REF_PN field. If $P\_REV\_IN\_USE_S$ is greater than three and $SOFT\_SLOPE_S$ is not equal to '000000', the mobile station shall include one occurrence of the three-field record given below for each pilot in the Active Set, for each pilot in the Candidate Set whose strength exceeds T_ADD, and shall also include one occurrence of the three-field record given below for each pilot in the Candidate Set whose strength satisfies the following inequality:

$$10 \times \log_{10} PS > \frac{SOFT\_SLOPE_S}{8} \times 10 \times \log_{10} \sum_{i \in A} PS_i + \frac{ADD\_INTERCEPT_S}{2}$$

where the summation is performed over all pilots currently in the Active Set. The mobile station shall not include these fields for the pilot identified by the REF_PN field.

The mobile station shall order any occurrences of the three-field record given below which correspond to pilots in the Active Set such that they occur before any occurrences of the three-field record given below which correspond to pilots in the Candidate Set.

PILOT_PN_PHASE – Pilot measured phase.

The mobile station shall set this field to the phase of the pilot PN sequence relative to the zero offset pilot PN sequence of this pilot, in units of one PN chip, as specified in 2.6.6.2.4.

PILOT_STRENGTH – Pilot strength in dB.

The mobile station shall set this field to

$$\lfloor -2 \times 10 \log_{10} PS \rfloor,$$

where PS is the strength of this pilot, measured as specified in 2.6.6.2.2. If this value ($\lfloor -2 \times 10 \log_{10} PS \rfloor$) is less than 0, the mobile station shall set this field to '000000'. If this value is greater than '111111', the mobile station shall set this field to '111111'.

KEEP – Keep pilot indicator.

If the handoff drop timer (see 2.6.6.2.3) corresponding to this pilot has expired, the mobile station shall set this field to '0'; otherwise, the mobile station shall set this field to '1'.

2.7.2.3.2.6 Power Measurement Report Message

MSG_TAG: PMRM

Field	Length (bits)
ERRORS_DETECTED	5
PWR_MEAS_FRAMES	10
LAST_HDM_SEQ	2
NUM_PILOTS	4
NUM_PILOTS occurrences of the following field:	
{ (NUM_PILOTS)	
PILOT_STRENGTH	6
} (NUM_PILOTS)	
DCCH_PWR_MEAS_INCL	1
DCCH_PWR_MEAS_FRAMES	0 or 10
DCCH_ERRORS_DETECTED	0 or 5
SCH_PWR_MEAS_INCL	1
SCH_ID	0 or 1
SCH_PWR_MEAS_FRAMES	0 or 16
SCH_ERRORS_DETECTED	0 or 10

ERRORS_DETECTED – Number of detected bad frames.

When the Forward Fundamental Channel is assigned, the mobile station shall set this field to the number of bad frames detected (BAD_FRAMES_S, see 2.6.4.1.1] on the Forward Fundamental Channel.

If $P\_REV\_IN\_USE_S$ is greater than or equal to six and only the Forward Dedicated Control Channel is assigned, the mobile station shall set this field to the number of bad frames detected on the Forward Dedicated Control Channel ($DCCH\_BAD\_FRAMES_S$, see 2.6.4.1.1].

If the number of bad frames received on this channel within the measurement period is less than or equal to 31, the mobile station shall set this field to that number. If that number exceeds 31, the mobile station shall set this field to '11111'.

PWR_MEAS_FRAMES – Number of power measurement frames.

When the Forward Fundamental Channel is assigned, the mobile station shall set this field to the number of frames received on the Forward Fundamental Channel within the measurement period (TOT_FRAMES_S, see 2.6.4.1.1).

If $P\_REV\_IN\_USE_S$ is greater than or equal to six and only the Dedicated Control Channel is assigned, the mobile station shall set this field to the number of frames received on the Dedicated Control Channel ($DCCH\_TOT\_FRAMES_S$, see 2.6.4.1.1).

LAST_HDM_SEQ – *Extended Handoff Direction Message* or a *General Handoff Direction Message*, or *Universal Handoff Direction Message* sequence number.

If an *Extended Handoff Direction Message*, a *General Handoff Direction Message*, or *Universal Handoff Direction Message* has been received during this call, the mobile station shall set this field to the value of the HDM_SEQ field from the *Extended Handoff Direction Message*, the *General Handoff Direction Message* or the *Universal Handoff Direction Message* that determined the current Active Set. If no *Extended Handoff Direction Message*, *General Handoff Direction Message*, or *Universal Handoff Direction Message* has been received during this call, the mobile station shall set this field to '11'.

NUM_PILOTS – Number of pilots reported.

The mobile station shall set this field to the number of pilots in the current Active Set.

PILOT_STRENGTH – Pilot strength in dB.

The mobile station shall include one occurrence of this field for each pilot in the Active Set. If the Active Set contains more than one pilot, the mobile station shall include the pilot strengths in the same order as in the *Extended Channel Assignment Message*, *Extended Handoff Direction Message*, *General Handoff Direction Message* or the *Universal Handoff Direction Message* that determined the current Active Set.

The mobile station shall set each occurrence of this field to

$$\lfloor -2 \times 10 \log_{10} PS \rfloor,$$

where PS is the strength of the pilot, measured as specified in 2.6.6.2.2. If this value ($\lfloor -2 \times 10 \log_{10} PS \rfloor$) is less than 0, the mobile station shall set this field to '000000'. If this value is greater than '111111', the mobile station shall set this field to '111111'.

DCCH_PWR_MEAS_INCL - Forward Dedicated Control Channel power measurement included.

If both Forward Fundamental Channel and Forward Dedicated Control Channel are assigned, the mobile station shall set this field equal to '1'; otherwise, the mobile shall set this field to '0'.

DCCH_PWR_MEAS_FRAMES - Number of received Dedicated Control Channel frames.

If DCCH_PWR_MEAS_INCL is set to '0', the mobile station shall omit this field; otherwise, the mobile station shall set this field to the number of frames received on the Dedicated Control Channel within the measurement period (DCCH_TOT_FRAMESs, see 2.6.4.1.1).

DCCH_ERRORS_DETECTED - Number of detected bad Dedicated Control Channel frames.

If DCCH_PWR_MEAS_INCL is set to '0', the mobile station shall omit this field; otherwise, the mobile station shall set this field to the number of bad frames ($DCCH\_BAD\_FRAMES_S$] detected on the Forward Dedicated Control Channel.

If $DCCH\_BAD\_FRAMES_S$ exceeds 31, the mobile station shall set this field to '11111'; otherwise, the mobile station shall set this field to $DCCH\_BAD\_FRAMES_S$ [see 2.6.4.1.1).

SCH_PWR_MEAS_INCL - Supplemental Channel power measurement included indicator.

If $FOR\_SCH\_FER\_REP_S$ is set to '1' and this message is to report the frame counts at the end of the burst on an assigned Supplemental Channel, the mobile station shall set this field to '1'; otherwise, the mobile station shall set this field to

SCH_ID - Forward Supplemental Channel identifier.

If the SCH_PWR_MEAS_INCL is set to '0', the mobile station shall omit this field; otherwise, the mobile shall set this field to the Identifier of the Forward Supplemental Channel of which the frame counts are being reported in this message.

SCH_PWR_MEAS_FRAMES - Number of received Supplemental Channel frames.

If SCH_PWR_MEAS_INCL is set to '0', the mobile station shall omit this field; otherwise, the mobile station shall set this field to the total number of frames ($SCH\_TOT\_FRAMES_S$] received during the burst duration on the Supplemental Channel specified by SCH_ID. If this measurement is greater than or equal to 2^{16} - 1, the mobile station shall set this field to '111111111111111'.

SCH_ERRORS_DETECTED - Number of detected bad Supplemental Channel frames.

If SCH_PWR_MEAS_INCL is set to ‘0’, the mobile station shall omit this field; otherwise, the mobile station shall set this field to the number of bad frame detected on the Forward Supplemental Channel of the SCH_ID for the duration of the forward burst on this channel.

If the number of bad frames ($SCH\_BAD\_FRAMES_S$) detected on the SCH_ID Supplemental Channel during the burst is greater than 1023, the mobile station shall set this field to ‘1111111111’.

2.7.2.3.2.7 Send Burst DTMF Message

MSG_TAG: BDTMFM

Field	Length (bits)
NUM_DIGITS	8
DTMF_ON_LENGTH	3
DTMF_OFF_LENGTH	3

NUM_DIGITS occurrences of the following field:

{ (NUM_DIGITS)

DIGITi	4

} (NUM_DIGITS)

CON_REF_INCL	1
CON_REF	0 or 8

NUM_DIGITS – Number of DTMF digits.

The mobile station shall set this field to the number of DTMF digits included in this message.

DTMF_ON_LENGTH – DTMF pulse width code.

The mobile station shall set this field to the DTMF_ON_LENGTH value shown in Table 2.7.2.3.2.7-1 corresponding to the requested width of DTMF pulses to be generated by the base station.

Table 2.7.2.3.2.7-1. Recommended DTMF Pulse Width

DTMF_ON_LENGTH Field (binary)	Recommended Pulse Width
000	95 ms
001	150 ms
010	200 ms
011	250 ms
100	300 ms
101	350 ms
All other DTMF_ON_LENGTH codes are reserved.	

DTMF_OFF_LENGTH – DTMF inter-digit interval code.

The mobile station shall set this field to the DTMF_OFF_LENGTH value shown in Table 2.7.2.3.2.7-2 corresponding to the requested minimum interval between DTMF pulses to be generated by the base station.

Table 2.7.2.3.2.7-2. Recommended Minimum Inter-digit Interval

DTMF_OFF_LENGTH Field (binary)	Recommended Minimum Inter-digit Interval
000	60 ms
001	100 ms
010	150 ms
011	200 ms
All other DTMF_OFF_LENGTH codes are reserved.	

DIGITi – DTMF digit.

The mobile station shall include one occurrence of this field for each DTMF digit to be generated by the base station. The mobile station shall set each occurrence of this field to the code value shown in Table 2.7.1.3.2.4-4 corresponding to the dialed digit.

CON_REF_INCL – Connection reference included indicator.

The mobile station shall set this field to ‘1’ if the connection reference field is included in this message; otherwise, it shall set this field to ‘0’.

CON_REF – Connection reference.

If the CON_REF_INCL field is set to ‘0’, the mobile station shall omit this field; otherwise, the mobile station shall include this field and shall set it to the value of the connection reference assigned to the service option connection of the call, to which this message corresponds.

2.7.2.3.2.8 Status Message

MSG_TAG: STM

Field	Length (bits)
RECORD_TYPE	8
RECORD_LEN	8
Type-specific fields	8 × RECORD_LEN

RECORD_TYPE – Information record type.

The mobile station shall set this field to the record type value shown in Table 2.7.4-1 corresponding to the type of this information record.

RECORD_LEN – Information record length.

The mobile station shall set this field to the number of octets included in the type-specific fields of this information record.

Type-specific fields – Type-specific fields.

The mobile station shall set these fields as specified in 2.7.4 for this type of record.

2.7.2.3.2.9 Origination Continuation Message

MSG_TAG: ORCM

Field	Length (bits)
DIGIT_MODE	1
NUM_FIELDS	8

NUM_FIELDS occurrences of the following field:

{ (NUM_FIELDS)

CHARi	4 or 8

} (NUM_FIELDS)

Zero or more occurrences of the following record:

{

RECORD TYPE	8
RECORD_LEN	8
Type-specific fields	8 × RECORD_LEN

}

DIGIT_MODE – Digit mode indicator.

The mobile station shall set this field to the DIGIT_MODE value from the *Origination Message* for which this message is a continuation.

NUM_FIELDS – Number of dialed digits in this message.

The mobile station shall set this field to the number of dialed digits included in this message.

CHARi – A dialed digit or character.

The mobile station shall include NUM_FIELDS occurrences of this field. The mobile station shall include occurrences of this field for all dialed digits after those sent in the *Origination Message* of which this message is a continuation. If the DIGIT_MODE field is set to ‘0’, the mobile station shall set each occurrence of this field to the code value shown in Table 2.7.1.3.2.4-4 corresponding to the dialed digit. If the DIGIT_MODE field is set to ‘1’, the mobile station shall set each occurrence of this field to the ASCII representation corresponding to the dialed digit, as specified in [9], with the most significant bit set to ‘0’.

If the MORE_RECORDS field in the last *Origination Message*, of which this message is a continuation, is set to ‘1’, the mobile station shall include one or more occurrences of the following three-field record; otherwise, the mobile station shall not include the following record.

RECORD_TYPE – Information record type.

The mobile station shall set this field to the record type value shown in Table 2.7.4-1.

The mobile station shall not include the record type for QoS Parameters information record if MOB_QOS_S is equal to '0'.

RECORD_LEN – Information record length.

The mobile station shall set this field to the number of octets in the type-specific fields included in this record.

Type-specific fields – Type-specific fields.

The mobile station shall include type-specific fields as specified in 2.7.4.

2.7.2.3.2.10 Handoff Completion Message

MSG_TAG: HOCM

Field	Length (bits)
LAST_HDM_SEQ	2

One or more occurrences of the following field:

{

PILOT_PN	9

}

LAST_HDM_SEQ – *Extended Handoff Direction Message*, *General Handoff Direction Message*, or *Universal Handoff Direction Message* sequence number.

The mobile station shall set this field to the value of the HDM_SEQ field from the *Extended Handoff Direction Message*, *General Handoff Direction Message*, or the *Universal Handoff Direction Message* that determined the current Active Set.

PILOT_PN – Pilot PN sequence offset.

The mobile station shall include one occurrence of this field for each pilot in the current Active Set. The mobile station shall set this field to the pilot PN sequence offset, relative to the zero offset pilot PN sequence in units of 64 PN chips, for this pilot. If the Active Set contains more than one pilot, the mobile station shall include the pilot offsets in the same order as in the *Extended Handoff Direction Message*, the *General Handoff Direction Message*, or the *Universal Handoff Direction Message* that determined the current Active Set.

2.7.2.3.2.11 Parameters Response Message

MSG_TAG: PRSM

Field	Length (bits)
One or more occurrences of the following record:	
{	
PARAMETER_ID	16
PARAMETER_LEN	10
PARAMETER	0 or PARAMETER_LEN + 1
}	

The mobile station shall include one occurrence of the following three-field record for each occurrence of the PARAMETER_ID field in the Forward Traffic Channel *Retrieve Parameters Message* to which this message is a response. See Annex E.

PARAMETER_ID – Parameter identification.

The mobile station shall set this field to the value of the PARAMETER_ID field for this parameter from the *Retrieve Parameters Message* to which this message is a response.

PARAMETER_LEN – Parameter length.

The mobile station shall set this field to the length shown in Table E-1 corresponding to this PARAMETER_ID.

If the mobile station is unable to return the value of this parameter, or if the parameter identification is unknown, the mobile station shall set this field to '1111111111'.

PARAMETER – Parameter value.

The mobile station shall set this field equal to the value of the parameter shown in Table E-1 corresponding to the PARAMETER_ID field of the record.

If the mobile station is unable to return the value of this parameter, or if the parameter identification is unknown, the mobile station shall omit this field.

2.7.2.3.2.12 Service Request Message

MSG_TAG: SRQM

Field	Length (bits)
SERV_REQ_SEQ	3
REQ_PURPOSE	4
RECORD_TYPE	0 or 8
RECORD_LEN	0 or 8
Type-specific fields	0 or 8 × RECORD_LEN

SERV_REQ_SEQ – Service request sequence number.

The mobile station shall set this field to the service request sequence number pertaining to this request message as specified in 2.6.4.1.2.1.1.

REQ_PURPOSE – Request purpose.

The mobile station shall set this field to the appropriate REQ_PURPOSE code from Table 2.7.2.3.2.12-1 to indicate the purpose of the message.

Table 2.7.2.3.2.12-1. REQ_PURPOSE Codes

REQ_PURPOSE (binary)	Meaning
0000	Indicates that the purpose of the message is to accept a proposed service configuration.
0001	Indicates that the purpose of the message is to reject a proposed service configuration.
0010	Indicates that the purpose of the message is to propose a service configuration.
All other REQ_PURPOSE codes are reserved.	

RECORD_TYPE – Information record type.

If the REQ_PURPOSE code is set to ‘0010’, the mobile station shall include this field and set it as follows; otherwise, the mobile station shall omit this field.

The mobile station shall set this field to the record type value shown in Table 2.7.4-1 corresponding to the Service Configuration information record.

RECORD_LEN – Information record length.

If the REQ_PURPOSE code is set to ‘0010’, the mobile station shall include this field and set it as follows; otherwise, the mobile station shall omit this field.

The mobile station shall set this field to the number of octets included in the type-specific fields of the Service Configuration information record.

Type-specific fields – Type-specific fields.

If the REQ_PURPOSE code is set to ‘0010’, the mobile station shall include this field and set it as follows; otherwise, the mobile station shall omit this field.

The mobile station shall set these fields as specified in 3.7.5.7 for the Service Configuration information record.

2.7.2.3.2.13 Service Response Message

MSG_TAG: SRPM

Field	Length (bits)
SERV_REQ_SEQ	3
RESP_PURPOSE	4
RECORD_TYPE	0 or 8
RECORD_LEN	0 or 8
Type-specific fields	0 or 8 × RECORD_LEN

SERV_REQ_SEQ – Service request sequence number.

The mobile station shall set this field to the value of the SERV_REQ_SEQ field of the *Service Request Message* to which it is responding.

RESP_PURPOSE – Response purpose.

The mobile station shall set this field to the appropriate RESP_PURPOSE code from Table 2.7.2.3.2.13-1 to indicate the purpose of the message.

Table 2.7.2.3.2.13-1. RESP_PURPOSE Codes

RESP_PURPOSE (binary)	Meaning
0000	Indicates that the purpose of the message is to accept a proposed service configuration.
0001	Indicates that the purpose of the message is to reject a proposed service configuration.
0010	Indicates that the purpose of the message is to propose a service configuration.
All other RESP_PURPOSE codes are reserved.	

RECORD_TYPE – Information record type.

If the RSP_PURPOSE code is set to ‘0010’, the mobile station shall include this field and set it as follows; otherwise, the mobile station shall omit this field.

The mobile station shall set this field to the record type value shown in Table 2.7.4-1 corresponding to the Service Configuration information record.

RECORD_LEN – Information record length.

If the RSP_PURPOSE code is set to ‘0010’, the mobile station shall include this field and set it as follows; otherwise, the mobile station shall omit this field.

The mobile station shall set this field to the number of octets included in the type-specific fields of the Service Configuration information record.

Type-specific fields – Type-specific fields.

If the RSP_PURPOSE code is set to ‘0010’, the mobile station shall include this field and set it as follows; otherwise, the mobile station shall omit this field.

The mobile station shall set these fields as specified in 3.7.5.7 for the Service Configuration information record.

2.7.2.3.2.14 Service Connect Completion Message

MSG_TAG: SCCM

Field	Length (bits)
RESERVED	1
SERV_CON_SEQ	3

RESERVED Reserved bit.

The mobile station shall set this field to ‘0’.

SERV_CON_SEQ – Service connect sequence number.

The mobile station shall set this field to the value of the SERV_CON_SEQ field of the *Service Connect Message* to which it is responding.

2.7.2.3.2.15 Service Option Control Message

MSG_TAG: SOCM

Field	Length (bits)
CON_REF	8
SERVICE_OPTION	16
RESERVED	7
CTL_REC_LEN	8
Type-specific fields	8 × CTL_REC_LEN

CON_REF – Service option connection reference.

The mobile station shall set this field to the reference for the target service option (see 2.6.4.1.2).

SERVICE_OPTION – Service option.

The mobile station shall set this field to the service option in use with the service option connection.

RESERVED – Reserved bits.

The mobile station shall set this field to '0000000'.

CTL_REC_LEN – Control record length.

The mobile station shall set this field to the number of octets included in the type-specific fields of this service option control record.

Type-specific fields – Type-specific fields.

The mobile station shall set these fields as specified by the requirements for the service option.

2.7.2.3.2.16 Status Response Message

MSG_TAG: STRPM

Field	Length (bits)
QUAL_INFO_TYPE	8
QUAL_INFO_LEN	3
Type-specific fields.	8 × QUAL_INFO_LEN

One or more occurrences of the following record:

{

RECORD_TYPE	8
RECORD_LEN	8
Type-specific fields	8 × RECORD_LEN

}

QUAL_INFO_TYPE – Qualification information type.

The mobile station shall set this field to the QUAL_INFO_TYPE field in the corresponding *Status Request Message*.

QUAL_INFO_LEN – Qualification information length.

The mobile station shall set this field to the QUAL_INFO_LEN field in the corresponding *Status Request Message*.

Type-specific fields – Type-specific fields.

The mobile station shall set these fields to the qualification information in the corresponding *Status Request Message*.

The mobile station shall include all the records requested in the corresponding *Status Request Message*. The mobile station shall include one occurrence of the following fields for each information record that is included:

RECORD_TYPE – Information record type.

The mobile station shall set this field to the record type value shown in Table 2.7.4-1 corresponding to the type of this information record.

RECORD_LEN – Information record length.

The mobile station shall set this field to the number of octets included in the type-specific fields of this information record.

Type-specific fields	–	Type-specific fields. The mobile station shall set these fields as specified in 2.7.4 for this type of record, according to the mobile station's capabilities under the qualification information included in this message.

2.7.2.3.2.17 TMSI Assignment Completion Message

MSG_TAG: TACM

There are no Layer 3 fields associated with this message.

2.7.2.3.2.18 Supplemental Channel Request Message

MSG_TAG: SCRM

Field	Length (bits)
SIZE_OF_REQ_BLOB	4
REQ_BLOB	8 × SIZE_OF_REQ_BLOB
USE_SCRM_SEQ_NUM	1
SCRM_SEQ_NUM	0 or 4
REF_PN	0 or 9
PILOT_STRENGTH	0 or 6
NUM_ACT_PN	0 or 3

NUM_ACT_PN occurrences of the following record:

{ (NUM_ACT_PN)

ACT_PN_PHASE	15
ACT_PILOT_STRENGTH	6

} (NUM_ACT_PN)

NUM_NGHBR_PN	0 or 3

NUM_NGHBR_PN occurrences of the following record:

{ (NUM_NGHBR_PN)

NGHBR_PN_PHASE	15
NGHBR_PILOT_STRENGTH	6

} (NUM_NGHBR_PN)

REF_PILOT_REC_INCL	0 or 1
REF_PILOT_REC_TYPE	0 or 3

(continues on next page)

Field	Length (bits)
REF_RECORD_LEN	0 or 3
Type-specific fields	0 or 8 × RECORD_LEN

NUM_ACT_PN occurrences of the following record:

{ (NUM_ACT_PN)

PILOT_REC_INCL	1
PILOT_REC_TYPE	0 or 3
RECORD_LEN	0 or 3
Type-specific fields	0 or 8 × RECORD_LEN

} (NUM_ACT_PN)

NUM_NGHBR_PN occurrences of the following record:

{ (NUM_NGHBR_PN)

PILOT_REC_INCL	1
PILOT_REC_TYPE	0 or 3
RECORD_LEN	0 or 3
Type-specific fields	0 or 8 × RECORD_LEN

} (NUM_NGHBR_PN)

SIZE_OF_REQ_BLOB – Size of the request information block of bytes (REQ_BLOB).

The mobile station shall set this field to the number of bytes in the Reverse Supplemental Code Channel or the Reverse Supplemental Channel request block of bytes (REQ_BLOB).

REQ_BLOB – Reverse Supplemental Code Channel or Reverse Supplemental Channel request block of bytes.

The mobile station shall include information in this field containing the parameters that specify the characteristics of the Reverse Supplemental Code Channels or the Reverse Supplemental Channel request. The mobile station shall set this field in accordance with the connected Service Option.

USE_SCRM_SEQ_NUM – Use *Supplemental Channel Request Message* sequence number indicator.

The mobile station shall set this field to ‘1’ if the *Supplemental Channel Request Message* sequence number is included in this message; otherwise, the mobile station shall set this field to '0'.

SCRM_SEQ_NUM – *Supplemental Channel Request Message* sequence number.

If USE_SCRM_SEQ_NUM is set to '1', the mobile station shall set this field to the *Supplemental Channel Request Message* sequence number that the base station is to include in a *Supplemental Channel Assignment Message* or *Extended Supplemental Channel Assignment Message* which is in response to this message; otherwise, the mobile station shall omit this field.

REF_PN – Time reference PN sequence offset.

If SIZE_OF_REQ_BLOB is set to '0000' and USE_SCRM_SEQ_NUM is set to '0', the mobile station shall omit this field; otherwise, the mobile station shall set this field to the PN sequence offset of the pilot used by the mobile station to derive its time reference, relative to the zero offset pilot PN sequence in units of 64 PN chips.

PILOT_STRENGTH – Reference pilot strength in dB.

If SIZE_OF_REQ_BLOB is set to '0000' and USE_SCRM_SEQ_NUM is set to '0', the mobile station shall omit this field; otherwise, the mobile station shall set this field to

$$\lfloor -2 \times 10 \times \log_{10} PS \rfloor,$$

where PS is the strength of the pilot used by the mobile station to derive its time reference (see [2]), measured as specified in 2.6.6.2.2. If this value ($\lfloor -2 \times 10 \log_{10} PS \rfloor$) is less than 0, the mobile station shall set this field to '000000'. If this value is greater than '111111', the mobile station shall set this field to '111111'.

NUM_ACT_PN – Number of reported pilots in the Active Set.

If SIZE_OF_REQ_BLOB is set to '0000' and USE_SCRM_SEQ_NUM is set to '0', the mobile station shall omit this field; otherwise, the mobile station shall set this field to the number of reported pilots in the Active Set other than the pilot identified by the REF_PN field.

If SIZE_OF_REQ_BLOB is set to '0000' and USE_SCRM_SEQ_NUM is set to '0', the mobile station shall not include any occurrence of the following record; otherwise, the mobile station shall include one occurrence of the following two-field record for each pilot in the Active Set other than the pilot identified by the REF_PN field:

ACT_PN_PHASE – Active pilot measured phase.

The mobile station shall set this field to the phase of this pilot PN sequence relative to the zero offset pilot PN sequence, in units of one PN chip, as specified in 2.6.6.2.4.

ACT_PILOT_STRENGTH – Active pilot strength in dB.

The mobile station shall set this field to

$$\lfloor -2 \times 10 \times \log_{10} PS \rfloor,$$

where PS is the strength of this pilot, measured as specified in 2.6.6.2.2. If this value ($\lfloor -2 \times 10 \log_{10} PS \rfloor$) is less than 0, the mobile station shall set this field to '000000'. If this value is greater than 63, the mobile station shall set this field to '111111'.

NUM_NGHBR_PN – Number of reported neighbor pilots in the Candidate Set and the Neighbor Set.

If SIZE_OF_REQ_BLOB is set to '0000', the mobile station shall omit this field; otherwise, the mobile station shall set this field as follows:

The mobile station shall set this field to the number of reported pilots which are not in the Active Set and have measurable strength that exceeds (T_ADD_S - $T\_MULCHAN_S$). (NUM_ACT_PN + NUM_NGHBR_PN) shall not exceed 8. If there are more than (8 - NUM_ACT_PN) pilots not in the Active Set with strength exceeding (T_ADD_S - $T\_MULCHAN_S$), the mobile station shall set NUM_NGHBR_PN to (8 - NUM_ACT_PN) and report the NUM_NGHBR_PN strongest pilots not in the Active Set.

If SIZE_OF_REQ_BLOB is set to '0000' and USE_SCRM_SEQ_NUM is set to '0', the mobile station shall not include any occurrence of the following record; otherwise, the mobile station shall include one occurrence of the following two-field record for each of the NUM_NGHBR_PN reported pilots.

NGHBR_PN_PHASE – Neighbor pilot measured phase.

The mobile station shall set this field to the phase of this pilot PN sequence relative to the zero offset pilot PN sequence, in units of one PN chip, as specified in 2.6.6.2.4.

NGHBR_PILOT_STRENGTH – Neighbor pilot strength.

The mobile station shall set this field to

$$\lfloor -2 \times 10 \times \log_{10} PS \rfloor,$$

where PS is the strength of this pilot, measured as specified in 2.6.6.2.2. If this value ($\lfloor -2 \times 10 \log_{10} PS \rfloor$) is less than 0, the mobile station shall set this field to '000000'. If this value is greater than 63, the mobile station shall set this field to '111111'.

REF_PILOT_REC_INCL – Additional pilot information included indicator.

If SIZE_OF_REQ_BLOB is set to '0000', the mobile station shall omit this field; otherwise, the mobile station shall include this field and set it as follows:

The mobile station shall set this field to '1' if additional reference pilot information listed in the REF_PILOT_REC_TYPE and REF_RECORD_LEN fields are included. The mobile station shall set this field to '0' if the corresponding pilot is the common pilot and there is no additional pilot information included.

REF_PILOT_REC_TYPE – Reference pilot record type.

If REF_PILOT_REC_INCL is included and set to '0', the mobile station shall omit this field. If REF_PILOT_REC_INCL is included and set to '1', the mobile station shall set this field to the REF_PILOT_REC_TYPE value shown in Table 2.7.2.3.2.34-1 corresponding to the type of Pilot Record specified by this record.

REF_RECORD_LEN – Pilot record length for the reference pilot.

If REF_PILOT_REC_INCL is included and set to '0', the mobile station shall omit this field. If REF_PILOT_REC_INCL is included and set to '1', the mobile station shall set this field to the number of octets in the type-specific fields of this pilot record.

Type-specific fields – Pilot record type-specific fields for the reference pilot.

If REF_PILOT_REC_INCL is included and set to '0', the mobile station shall omit this field. If REF_PILOT_REC_INCL is included and set to '1', the mobile station shall include type-specific fields based on the REF_PILOT_REC_TYPE of this pilot record.

If REF_PILOT_REC_TYPE is equal to '000', the mobile station shall include the following fields:

Field	**Length (bits)**
QOF	2
WALSH_LENGTH	3
PILOT_WALSH	(WALSH_LENGTH + 6)
RESERVED	0 to 7 (as needed)

QOF – Quasi-orthogonal function index.

The mobile station shall set this field to the index of the Quasi-orthogonal function of the corresponding Auxiliary Pilot.

WALSH_LENGTH – Length of the Walsh code for the reference pilot.

The mobile station shall set this field to the WALSH_LENGTH value shown in Table 2.7.2.3.2.34-2 corresponding to the length of the Walsh code for the pilot that is used as the Auxiliary Pilot.

PILOT_WALSH – Walsh code for the Auxiliary Pilot used by the mobile station to derive its time reference.

The mobile station shall set this field to the Walsh code corresponding to the Auxiliary Pilot.

RESERVED – Reserved bits.

The mobile station shall set all the bits of this field to ‘0’ to make the entire record octet-aligned.

If SIZE_OF_REQ_BLOB is set to ‘0000’ and USE_SCRM_SEQ_NUM is set to ‘0’, the mobile station shall not include any occurrence of the following record; otherwise, the mobile station shall include one occurrence of the following record for each pilot in the Active Set other than the pilot identified by the REF_PN field:

PILOT_REC_INCL – Additional pilot information included indicator.

The mobile station shall set this field to ‘1’ if additional pilot information listed in the PILOT_REC_TYPE and RECORD_LEN fields are included. The mobile station shall set this field to ‘0’ if the corresponding pilot is the common pilot and there is no additional pilot information included.

PILOT_REC_TYPE – Reference pilot record type.

If PILOT_REC_INCL is set to ‘0’, the mobile station shall omit this field; otherwise, the mobile station shall set this field to the PILOT_REC_TYPE value shown in Table 2.7.2.3.2.34-1 corresponding to the type of Pilot Record specified by this record.

RECORD_LEN – Pilot record length.

If PILOT_REC_INCL is set to ‘0’, the mobile station shall omit this field; otherwise, the mobile station shall set this field to the number of octets in the type-specific fields of this pilot record.

Type-specific fields – Pilot record type-specific fields.

If PILOT_REC_INCL is set to ‘0’, the mobile station shall omit this field; otherwise, the mobile station shall include type-specific fields based on the PILOT_REC_TYPE of this pilot record as described in 3.7.6.1.

If SIZE_OF_REQ_BLOB is set to ‘0000’ and USE_SCRM_SEQ_NUM is set to ‘0’, the mobile station shall not include any occurrence of the following record; otherwise, the mobile station shall include one occurrence of the following record for each of the NUM_NGHBR_PN reported pilots.

PILOT_REC_INCL – Additional pilot information included indicator.

The mobile station shall set this field to ‘1’ if additional pilot information listed in the PILOT_REC_TYPE and RECORD_LEN fields are included. The mobile station shall set this field to ‘0’ if the corresponding pilot is the common pilot and there is no additional pilot information included.

PILOT_REC_TYPE – Reference pilot record type.

If PILOT_REC_INCL is set to ‘0’, the mobile station shall omit this field; otherwise, the mobile station shall set this field to the PILOT_REC_TYPE value shown in Table 2.7.2.3.2.34-1 corresponding to the type of Pilot Record specified by this record.

RECORD_LEN – Pilot record length.

If PILOT_REC_INCL is set to ‘0’, the mobile station shall omit this field; otherwise, the mobile station shall set this field to the number of octets in the type-specific fields of this pilot record.

Type-specific fields – Pilot record type-specific fields.

If PILOT_REC_INCL is set to ‘0’, the mobile station shall omit this field; otherwise, the mobile station shall include type-specific fields based on the PILOT_REC_TYPE of this pilot record as described in 3.7.6.1.

2.7.2.3.2.19 Candidate Frequency Search Response Message

MSG_TAG: CFSRSM

Field	Length (bits)
LAST_CFSRM_SEQ	2
TOTAL_OFF_TIME_FWD	6
MAX_OFF_TIME_FWD	6
TOTAL_OFF_TIME_REV	6
MAX_OFF_TIME_REV	6
PCG_OFF_TIMES	1
ALIGN_TIMING_USED	1
MAX_NUM_VISITS	0 or 5
INTER_VISIT_TIME	0 or 6

LAST_CFSRM_SEQ – *Candidate Frequency Search Request Message* sequence number.

The mobile station shall set this field to the value of the CFSRM_SEQ field from the *Candidate Frequency Search Request Message* to which this message is a response.

TOTAL_OFF_TIME_FWD – Total time that the mobile station is off the Forward Traffic Channel.

The mobile station shall set this field to the mobile station's estimate of the total number of frames or power control groups for which the mobile station will need to suspend its current Forward Traffic Channel processing in order to tune to the Candidate Frequency, to perform the requested search, and to re-tune to the Serving Frequency. If the mobile station requires multiple visits to the Candidate Frequency to complete the requested search, the mobile station shall set this field to the total number of frames (if PCG_OFF_TIME is set to '0') or power control groups (if PCG_OFF_TIME is set to '1') for all visits to the Candidate Frequency in a search period.

MAX_OFF_TIME_FWD – Maximum time the mobile station is away from the Forward Traffic Channel.

The mobile station shall set this field to the mobile station's estimate of the maximum number of frames (if PCG_OFF_TIME is set to '0') or power control groups (if PCG_OFF_TIME is set to '1') for which the mobile station will need to suspend its current Forward Traffic Channel processing during a visit to the Candidate Frequency, to perform a part of the requested search, and to re-tune to the Serving Frequency.

TOTAL_OFF_TIME_REV – Total time that the mobile station is away from the Reverse Traffic Channel.

The mobile station shall set this field to the mobile station's estimate of the total number of frames or power control groups for which the mobile station will need to suspend its current Reverse Traffic Channel processing in order to tune to the Candidate Frequency, to perform the requested search, and to re-tune to the Serving Frequency. If the mobile station requires multiple visits to the Candidate Frequency to complete the requested search, the mobile station shall set this field to the total number of frames or power control groups for all visits to the Candidate Frequency in a search period.

MAX_OFF_TIME_REV – Maximum time the mobile station is away from the Reverse Traffic Channel.

The mobile station shall set this field to the mobile station's estimate of the maximum number of frames or power control groups for which the mobile station will need to suspend its current Forward Traffic Channel processing during a visit to the Candidate Frequency, to perform a part of the requested search, and to re-tune to the Serving Frequency.

PCG_OFF_TIMES – Indicator if off times are expressed in units of power control groups.

If $P\_REV\_IN\_USE_S$ is less than six, the mobile station shall set this field to '0'; otherwise, the mobile station shall set this field as follows:

The mobile station shall set this field to '1' if it expresses TOTAL_OFF_TIME_FWD, MAX_OFF_TIME_FWD, TOTAL_OFF_TIME_REV, and MAX_OFF_TIME_REV in units of power control groups; otherwise, the mobile station shall set this field to '0' so that TOTAL_OFF_TIME_FWD, MAX_OFF_TIME_FWD, TOTAL_OFF_TIME_REV, and MAX_OFF_TIME_REV are expressed in units of frames.

ALIGN_TIMING_USED – Alignment timing used indicator.

The mobile station shall set this field to '1' if it will align the times of its visits away from the Serving Frequency, as requested by the base station; otherwise, the mobile station shall set this field to '0'.

MAX_NUM_VISITS – Maximum number of visits per search period.

If the ALIGN_TIMING_USED field is set to '0', the mobile station shall omit this field; otherwise, the mobile station shall include this field and set it to the maximum number of visits per search period minus one.

INTER_VISIT_TIME – Inter-visit time.

If the mobile station includes the MAX_NUM_VISITS field and sets it to a value other than 0, the mobile station shall include this field and set it as described below; otherwise, the mobile station shall omit this field.

The mobile station shall set INTER_VISIT_TIME to

$$\min(63, \lceil inter\_visit\_time \ / \ search\_time\_resolution \rceil)$$

where

search_time_resolution is equal to 0.02 if the mobile station sets PCG_OFF_TIMES to '0'; otherwise, *search_time_resolution* is equal to 0.00125,

and

inter_visit_time is the mobile station's estimate of the time, in seconds, between the beginning of consecutive visits away from the Serving Frequency.

2.7.2.3.2.20 Candidate Frequency Search Report Message

MSG_TAG: CFSRPM

Field	Length (bits)
LAST_SRCH_MSG	1
LAST_SRCH_MSG_SEQ	2
SEARCH_MODE	4
MODE_SPECIFIC_LEN	8
Mode-specific fields	8 × MODE_SPECIFIC_LEN

LAST_SRCH_MSG – Indicator for the type of message that started the search being reported.

If this message is being sent to report the results of a single search or a periodic search started by a *Candidate Frequency Search Control Message* or by a *Candidate Frequency Search Request Message*, the mobile station shall set this field to '0'; otherwise, the mobile station shall set this field to '1'.

LAST_SRCH_MSG_SEQ – Sequence number received in the message that started the search being reported.

If this message is being sent in response to a *Candidate Frequency Search Control Message*, the mobile station shall set this field to the value of the CFSCM_SEQ field from the *Candidate Frequency Search Control Message*.

If this message is being sent in response to a *Candidate Frequency Search Request Message*, the mobile station shall set this field to the value of the CFSRM_SEQ field from the *Candidate Frequency Search Request Message*.

If this message is being sent in response to a *General Handoff Direction Message* or a *Universal Handoff Direction Message*, the mobile station shall set this field to the value of the HDM_SEQ field from the *General Handoff Direction Message* or the *Universal Handoff Direction Message*.

SEARCH_MODE – Search mode.

The mobile station shall set this field to the SEARCH_MODE value shown in Table 3.7.3.3.2.27-2 corresponding to the type of search specified by the *Candidate Frequency Search Request Message* that specified the search parameters.

MODE_SPECIFIC_LEN – Length of mode-specific fields included in this message.

Mode-specific fields – Search mode-specific fields.

The mobile station shall include mode-specific fields based on the SEARCH_MODE of this message.

If SEARCH_MODE is equal to '0000', the mobile station shall include the following fields:

Field	**Length (bits)**
BAND_CLASS	5
CDMA_FREQ	11
SF_TOTAL_RX_PWR	5
CF_TOTAL_RX_PWR	5
NUM_PILOTS	6

NUM_PILOTS occurrences of the following record:

{ (NUM_PILOTS)

PILOT_PN_PHASE	15
PILOT_STRENGTH	6
RESERVED_1	3

} (NUM_PILOTS)

NUM_PILOTS occurrences of the following record:

{ (NUM_PILOTS)

PILOT_REC_INCL	1
PILOT_REC_TYPE	0 or 3
RECORD_LEN	0 or 3
Type-specific fields	0 or 8 × RECORD_LEN

} (NUM_PILOTS)

BAND_CLASS - Band class.

If this message is being sent to report an unsuccessful hard handoff attempt, the mobile station shall set this field to the CDMA band class corresponding to the CDMA Frequency Assignment for the Target Frequency, as specified in [30]. If this message is being sent to report measurements on a Candidate Frequency, the mobile station shall set this field to the CDMA band class corresponding to the CDMA Frequency Assignment for the Candidate Frequency, as specified in [30].

CDMA_FREQ – Frequency assignment.

If this message is being sent to report an unsuccessful hard handoff attempt, the mobile station shall set this field to the CDMA Channel number, in the specified CDMA band class, corresponding to the CDMA Frequency Assignment for the Target Frequency, as specified in [2]. If this message is being sent to report measurements on a Candidate Frequency, the mobile station shall set this field to the CDMA Channel number, in the specified CDMA band class, corresponding to the CDMA Frequency Assignment for the Candidate Frequency, as specified in [2].

SF_TOTAL_RX_PWR – Total received power on the Serving Frequency.

The mobile station shall set this field to

$$\min(31, \lceil (10 \times \log_{10}(total\_received\_power) + 110) / 2 \rceil)$$

where *total_received_power* is the mean input power received by the mobile station on the Serving Frequency, in mW/1.23 MHz.

CF_TOTAL_RX_PWR – Indicates the total received power on the Target Frequency or the Candidate Frequency.

If this message is being sent to report an unsuccessful hard handoff attempt, the mobile station shall include the total received power on the Target Frequency; if this message is being sent to report measurements on a Candidate Frequency, the mobile station shall include the total received power on the Candidate Frequency.

The mobile station shall set this field to

$$\min(31, \lceil (10 \times \log_{10}(total\_received\_power) + 110) / 2 \rceil)$$

where *total_received_power* is the mean input power received by the mobile station on the Target Frequency or the Candidate Frequency, in mW/1.23 MHz.

NUM_PILOTS – Number of pilots.

The mobile station shall set this field to the number of pilots included in this message. The mobile station shall set this field to a value from 0 to N_{8m}, inclusive.

The mobile station shall include NUM_PILOTS occurrences of the following three-field record:

PILOT_PN_PHASE – Pilot measured phase.

The mobile station shall set this field to the phase of the pilot PN sequence relative to the zero offset pilot PN sequence of this pilot, in units of one PN chip, as specified in 2.6.6.2.4.

PILOT_STRENGTH – Pilot strength in dB.

The mobile station shall set this field to

$$\lfloor -2 \times 10 \times \log_{10} PS \rfloor,$$

where PS is the strength of this pilot, measured as specified in 2.6.6.2.2. If this value ($\lfloor -2 \times 10 \log_{10} PS \rfloor$) is less than 0, the mobile station shall set this field to '000000'. If this value is greater than 63, the mobile station shall set this field to '111111'.

RESERVED_1 – Reserved bits.

The mobile station shall set this field to '000'.

The mobile station shall include NUM_PILOTS occurrences of the following record in the same order as the pilots listed above.

PILOT_REC_INCL – Additional pilot information included indicator.

The mobile station shall set this field to '1' if additional pilot information listed in the PILOT_REC_TYPE and RECORD_LEN fields are included. The mobile station shall set this field to '0' if the corresponding pilot is the common pilot and there is no additional pilot information included.

PILOT_REC_TYPE – Reference Pilot record type

If PILOT_REC_INCL is set to '0', the mobile station shall omit this field; otherwise, the mobile station shall set this field to the PILOT_REC_TYPE value shown in Table 2.7.2.3.2.34-1 corresponding to the type of Pilot Record specified by this record.

RECORD_LEN – Pilot record length.

If PILOT_REC_INCL is set to '0', the mobile station shall omit this field; otherwise, the mobile station shall set this field to the number of octets in the type-specific fields of this pilot record.

Type-specific fields – Pilot record type-specific fields.

If PILOT_REC_INCL is set to '0', the mobile station shall omit this field; otherwise, the mobile station shall include type-specific fields based on the PILOT_REC_TYPE of this pilot record as described in 3.7.6.1.

2.7.2.3.2.21 Periodic Pilot Strength Measurement Message

MSG_TAG: PPSMM

Field	**Length (bits)**
REF_PN	9
PILOT_STRENGTH	6
KEEP	1
SF_RX_PWR	5
NUM_PILOT	4

NUM_PILOT occurrences of the following record:

{ (NUM_PILOT)

PILOT_PN_PHASE	15
PILOT_STRENGTH	6
KEEP	1

} (NUM_PILOT)

NUM_PILOT occurrences of the following record:

{ (NUM_PILOT)

PILOT_REC_INCL	1
PILOT_REC_TYPE	0 or 3
RECORD_LEN	0 or 3
Type-specific fields	0 or 8 × RECORD_LEN

} (NUM_PILOT)

SETPT_INCL	1
FCH_INCL	0 or 1
FPC_FCH_CURR_SETPT	0 or 8
DCCH_INCL	0 or 1
FPC_DCCH_CURR_SETPT	0 or 8
NUM_SUP	0 or 2

NUM_SUP occurrences of the following fields:

{ (NUM_SUP)

SCH_ID	1
FPC_SCH_CURR_SETPT	8

} (NUM_SUP)

REF_PN - Time reference PN sequence offset.

The mobile station shall set this field to the PN sequence offset of the pilot used by the mobile station to derive its time reference, relative to the zero offset pilot PN sequence in units of 64 PN chips.

PILOT_STRENGTH - Pilot strength in dB.

The mobile station shall set this field to

$$\lfloor -2 \times 10 \times \log_{10} PS \rfloor,$$

where PS is the strength of the pilot used by the mobile station to derive its time reference (see [2]), measured as specified in 2.6.6.2.2. If this value is less than 0, the mobile station shall set this field to '000000'. If this value is greater than '111111', the mobile station shall set this field to '111111'.

KEEP - Keep pilot indicator.

If the handoff drop timer (see 2.6.6.2.3) corresponding to the pilot used by the mobile station to derive its time reference (see [2]) has expired, the mobile station shall set this field to '0'; otherwise, the mobile station shall set this field to '1'.

SF_RX_PWR - The received power spectral density of the Serving Frequency.

The mobile station shall set this field to

$$\min(31, \lceil (10 \times \log_{10}(spec\_density) + 120) / 2 \rceil)$$

where *spec_density* is the mobile station received power spectral density of the Serving Frequency, in mW/1.23MHz.

If this value is less than 0, the mobile station shall set this field to '00000'.

NUM_PILOT - Number of Pilots.

The mobile station shall set this field to the number of other reported pilots of the Active Set and the Candidate Set.

The mobile station shall include NUM_PILOT occurrences of the following three-field record, one for each pilot in the Active Set and one for each pilot in the Candidate Set, other than the pilot identified by the REF_PN field.

PILOT_PN_PHASE - Pilot measured phase.

The mobile station shall set this field to the phase of the pilot PN sequence relative to the zero offset pilot PN sequence of this pilot, in units of one PN chip, as specified in 2.6.6.2.4.

PILOT_STRENGTH - Pilot strength in dB.

The mobile station shall set this field to

$$\lfloor -2 \times 10 \times \log_{10} PS \rfloor,$$

where PS is the strength of this pilot, measured as specified in 2.6.6.2.2. If this value is less than 0, the mobile station shall set this field to '000000'. If this value is greater than '111111', the mobile station shall set this field to '111111'.

KEEP - Keep pilot indicator.

If the handoff drop timer (see 2.6.6.2.3) corresponding to this pilot has expired, the mobile station shall set this field to '0'; otherwise, the mobile station shall set this field to '1'.

The mobile station shall include NUM_PILOTS occurrences of the following record in the same order as the pilots listed above.

PILOT_REC_INCL - Additional pilot information included indicator.

The mobile station shall set this field to '1' if additional pilot information listed in the PILOT_REC_TYPE and RECORD_LEN fields are included. The mobile station shall set this field to '0' if the corresponding pilot is the common pilot and there is no additional pilot information included.

PILOT_REC_TYPE - Reference Pilot record type

If PILOT_REC_INCL is set to '0', the mobile station shall omit this field; otherwise, the mobile station shall set this field to the PILOT_REC_TYPE value shown in Table 2.7.2.3.2.34-1 corresponding to the type of Pilot Record specified by this record.

RECORD_LEN - Pilot record length.

If PILOT_REC_INCL is set to '0', the mobile station shall omit this field; otherwise, the mobile station shall set this field to the number of octets in the type-specific fields of this pilot record.

Type-specific fields - Pilot record type-specific fields.

If PILOT_REC_INCL is set to '0', the mobile station shall omit this field; otherwise, the mobile station shall include type-specific fields based on the PILOT_REC_TYPE of this pilot record as described in 2.7.2.3.2.34.

SETPT_INCL - Setpoint information included indicator.

The mobile station shall set this field to '1' if setpoint information is included in this message; otherwise, the mobile station shall set this field to '0'.

FCH_INCL - Fundamental Channel included indicator.

If SETPT_INCL is equal to '1', the mobile station shall include this field and set it as follows; otherwise, the mobile station shall omit this field.

If $P\_REV\_IN\_USE_s$ is less than nine, the mobile station shall do the following:

The mobile station shall set this field to '1' if $FPC\_PRI\_CHAN_S$ is equal to '0'; otherwise, the mobile station shall set this field to '0'.

If $P\_REV\_IN\_USE_s$ is greater than or equal to nine, the mobile station shall do the following:

The mobile station shall set this field to '1' if a Fundamental Channel is assigned; otherwise, the mobile station shall set this field to '0'.

FPC_FCH_CURR_SETPT - The outer loop E_b/N_t setpoint of the Fundamental Channel.

If SETPT_INCL is equal to '1' and if FCH_INCL is set to '1', the mobile station shall set this field to the value of the E_b/N_t setpoint, in units of 0.125 dB, currently in use in the Fundamental Channel power control outer loop estimation; otherwise, the mobile station shall omit this field.

DCCH_INCL - Dedicated Control Channel included indicator.

If SETPT_INCL is equal to '1', the mobile station shall include this field and set it as follows; otherwise, the mobile station shall omit this field.

If $P\_REV\_IN\_USE_s$ is less than nine, the mobile station shall do the following:

The mobile station shall set this field to '1' if $FPC\_PRI\_CHAN_S$ is equal to '1'; otherwise, the mobile station shall set this field to '0'.

If $P\_REV\_IN\_USE_s$ is greater than or equal to nine, the mobile station shall do the following:

The mobile station shall set this field to '1' if a Dedicated Control Channel is assigned; otherwise, the mobile station shall set this field to '0'.

FPC_DCCH_CURR_SETPT - The outer loop E_b/N_t setpoint of the Forward Dedicated Channel.

If SETPT_INCL is equal to '1', and if DCCH_INCL is set to '1', the mobile station shall set this field to the value of the E_b/N_t setpoint, in units of 0.125 dB, currently in use in the Dedicated Channel power control outer loop estimation; otherwise, the mobile station shall omit this field.

NUM_SUP - The number of Supplemental Channels.

If SETPT_INCL is equal to '1', the mobile station shall include this field and set it as follows; otherwise, the mobile station shall omit this field.

The mobile station shall set this field to the total number of the Supplemental Channels reported by this message.

The mobile station shall include NUM_SUP occurrences of the following two fields:

SCH_ID - The Supplemental Channel index.

The mobile station shall set this field to the Supplemental Channel index to indicate the Forward Supplemental Channel that is to be reported.

FPC_SCH_CURR_SETPT - The supplemental channel outer loop E_b/N_t setpoint.

The mobile station shall set this field to the value of the power control outer loop E_b/N_t setpoint, in units of 0.125 dB, currently in use in the Channel specified by SCH_ID.

2.7.2.3.2.22 Outer Loop Report Message

MSG_TAG: OLRM

Field	Length (bits)
FCH_INCL	1
FPC_FCH_CURR_SETPT	0 or 8
DCCH_INCL	1
FPC_DCCH_CURR_SETPT	0 or 8
NUM_SUP	2

NUM_SUP occurrences of the following fields:

{ (NUM_SUP)

SCH_ID	1
FPC_SCH_CURR_SETPT	8

} (NUM_SUP)

FCH_INCL – Fundamental Channel included indicator.

The mobile station shall set this field to '1' if FPC_FCH_CURR_SETPT is included; otherwise the mobile station shall set this field to '0'.

FPC_FCH_CURR_SETPT – The outer loop E_b/N_t setpoint of the Fundamental Channel.

If FCH_INCL is set to '1', the mobile station shall set this field to the value of the E_b/N_t setpoint, in units of 0.125 dB, currently in use in the Fundamental Channel power control outer loop estimation; otherwise, the mobile station shall omit this field.

DCCH_INCL – Dedicated Control Channel included indicator.

The mobile station shall set this field to '1' if the FPC_DCCH_CURR_SETPT field is included; otherwise the mobile station shall set this field to '0'.

FPC_DCCH_CURR_SETPT – The outer loop E_b/N_t setpoint of the Forward Dedicated Channel.

If DCCH_INCL is set to '1', the mobile station shall set this field to the value of the E_b/N_t setpoint, in units of 0.125 dB, currently in use in the Dedicated Channel power control outer loop estimation; otherwise, the mobile station shall omit this field.

NUM_SUP – The number of Supplemental Channels.

The mobile station shall set this field to the total number of the Supplemental Channels reported by this message.

The mobile station shall in NUM_SUP occurrences of the following two fields:

SCH_ID – The Supplemental Channel index.

The mobile station shall set this field to the Supplemental Channel index to indicate the Forward Supplemental Channel that to be reported

FPC_SCH_CURR_SETPT – The supplemental outer loop E_b/N_t setpoint.

The mobile station shall set this field to the value of the power control outer loop E_b/N_t setpoint, in units of 0.125 dB, currently in use in the Channel specified by SCH_ID.

2.7.2.3.2.23 Resource Request Message

MSG_TAG: RRM

Field	Length (bits)
CH_IND_INCL	1
CH_IND	0 or 2
EXT_CH_IND	0 or 5

CH_IND_INCL – Channel indicator inclusion bit.

The mobile station shall set this field to '1' if the mobile station is requesting a channel configuration; otherwise, the mobile station shall set this field to '0'.

CH_IND – Channel indicator.

If CH_IND_INCL is set to '0', the mobile station shall omit this field; otherwise, the mobile station shall include this field and set it as shown in Table 2.7.1.3.2.4-6 to request a new physical channel configuration.

EXT_CH_IND - Extended Channel Indicator.

If the CH_IND field is not included, or is included and not set to '00', the mobile station shall omit this field; otherwise, the mobile station shall include this field and set it as shown in Table 2.7.1.3.2.4-11 to request a new physical channel configuration.

2.7.2.3.2.24 Resource Request Mini Message

MSG_TAG: RRMM

Field	Length (bits)
CH_IND_INCL	1
CH_IND	0 or 2
EXT_CH_IND	0 or 5

CH_IND_INCL – Channel indicator inclusion bit.

The mobile station shall set this field to ‘1’ if the mobile station is requesting a channel configuration; otherwise, the mobile station shall set this field to ‘0’.

CH_IND – Channel indicator.

If CH_IND_INCL is set to ‘0’, the mobile station shall omit this field; otherwise, the mobile station shall include this field and set it as shown in Table 2.7.1.3.2.4-6 to request a new physical channel configuration.

EXT_CH_IND - Extended Channel Indicator.

If the CH_IND field is not included, or is included and not set to ‘00’, the mobile station shall omit this field; otherwise, the mobile station shall include this field and set it as shown in Table 2.7.1.3.2.4-11 to request a new physical channel configuration.

2.7.2.3.2.25 Extended Release Response Message

MSG_TAG: ERRM

Field	Length (bits)
RSC_MODE_IND	1
RSCI	0 or 4
RSC_END_TIME_UNIT	0 or 2
RSC_END_TIME_VALUE	0 or 4

RSC_MODE_IND – Reduced slot cycle mode indicator.

The mobile station shall set this field to ‘1’ to indicate that it will operate in the reduced slot cycle mode following release of the traffic channel; otherwise, the mobile station shall set this field to ‘0’.

RSCI – Reduced slot cycle index.

If RSC_MODE_IND is equal to ‘1’, the mobile station shall include this field and set it to the value of the reduced slot cycle index, as specified in Table 2.7.1.3.2.1-8; otherwise, the mobile station shall omit this field.

The mobile station shall set this field to a value less than the registered slot cycle index, SLOT_CYCLE_INDEX_REG.

RSC_END_TIME_UNIT – Reduced slot cycle mode end time unit.

If RSC_MODE_IND is equal to ‘0’, the mobile station shall omit this field; otherwise, the mobile station shall set this field according to Table 2.7.3.5-1 to indicate the units of the RSC_END_TIME_VALUE field.

RSC_END_TIME_VALUE – Reduced slot cycle mode end time value.

If RSC_MODE_IND is equal to ‘0’, the mobile station shall omit this field; otherwise, the mobile station shall include this field and set it as follows:

The mobile station shall set this field to the system time, in units of time specified by RSC_END_TIME_UNIT(modulo 16), at which the mobile station is to exit the reduced slot cycle mode.

2.7.2.3.2.26 Extended Release Response Mini Message

MSG_TAG: ERRMM

There are no Layer 3 fields associated with this message.

2.7.2.3.2.27 Pilot Strength Measurement Mini Message

MSG_TAG: PSMMM

Field	Length (bits)
PSMM_POS	3
PILOT_STRENGTH	6
RANK	3

PSMM_POS – *Pilot Strength Measurement Message* position.

The mobile station shall set this field to an index corresponding to the position, within the last sent *Pilot Strength Measurement Message* (see 2.7.2.3.2.5) or *Extended Pilot Strength Measurement Message* (see 2.7.2.3.2.34), of the Active-Set pilot whose strength is being reported. The mobile station shall use a value of 0 to report the pilot represented by the REF_PN field in the last sent *Pilot Strength Measurement Message* or *Extended Pilot Strength Measurement Message*. The mobile station shall use a value of n, where n is an integer greater than 0, to report the pilot represented by the nth occurrence of the PILOT_PN_PHASE field in the last sent *Pilot Strength Measurement Message* or *Extended Pilot Strength Measurement Message*.

PILOT_STRENGTH – Pilot strength in dB.

The mobile station shall set this field to

$$\lfloor -2 \times 10 \times \log10\ PS \rfloor,$$

where PS is the strength of this Active-Set pilot, measured as specified in [2]. If this value is less than 0, the mobile station shall set this field to '000000'. If this value is greater than '111111', the mobile station shall set this field to '111111'.

RANK – Rank order.

The mobile station shall set this field to the rank order of the pilot whose strength is being reported, relative to all other pilots in the current Active Set. The mobile station shall use a value of 0 to report the strongest pilot in the current Active Set.

2.7.2.3.2.28 Supplemental Channel Request Mini Message

MSG_TAG: SCRMM

Field	Length (bits)
REQ_BLOB	16

REQ_BLOB – Reverse Supplemental Channel request block of bytes.

The mobile station shall include information in this field containing the parameters that specify the characteristics of the Reverse Supplemental Channels request. The mobile station shall set this field in accordance with the connected Service Options.

2.7.2.3.2.29 Resource Release Request Message

MSG_TAG: RRRM

Field	Length (bits)
GATING_DISCONNECT_IND	1
CON_REF	0 or 8
PURGE_SERVICE	0 or 1
ADD_CON_REF_INCL	0 or 1
NUM_ADD_CON_REF	0 or 3

{ (NUM_ADD_CON_REF + 1)

ADD_CON_REF	8
ADD_PURGE_SERVICE	1

} (NUM_ADD_CON_REF + 1)

BCMC_INFO_INCL	1
NUM_BCMC_PROGRAMS	0 or 6

0 or NUM_BCMC_PROGRAMS occurrences of the following variable length record:

{ (0 or NUM_BCMC_PROGRAMS)

BCMC_PROGRAM_ID_LEN	5
BCMC_PROGRAM_ID	Variable (Value of BCMC_PROGRAM_ID _LEN + 1)
BCMC_FLOW_DISCRIMINATOR_ LEN	3
NUM_FLOW_DISCRIMINATOR	BCMC_FLOW_DISCR IMINATOR_LEN

NUM_FLOW_DISCRIMINATOR+1 or 1 occurrences of the following variable length record:

{ (NUM_FLOW_DISCRIMINATOR+1) or 1

BCMC_FLOW_DISCRIMINATOR	BCMC_FLOW_DISCRIM INATOR_LEN

} (NUM_FLOW_DISCRIMINATOR+1) or 1

} (0 or NUM_BCMC_PROGRAMS)

GATING_DISCONNECT_IND - Reverse pilot gating or service disconnect indicator.

If the mobile station requests that reverse pilot gating operation to be performed, the mobile station shall set this field to '1'; otherwise (if the mobile station requests that the service option connection specified by CON_REF to be released), the mobile station shall set this field to '0'.

CON_REF - Connection reference.

If the GATING_DISCONNECT_IND field is set to '1', the mobile station shall omit this field; otherwise, the mobile station shall include this field and set it as follows:

To request the release of a service option connection, the mobile station shall set this field to the connection reference corresponding to one of the service option connections requested to be released; otherwise the mobile station shall set this field to '00000000'.

PURGE_SERVICE - Purge service instance indicator.

If the GATING_DISCONNECT_IND field is set to '1', the mobile station shall omit this field; otherwise, the mobile station shall include this field and set it as follows:

If the CON_REF is not set to '00000000' and if the packet data service instance identified by CON_REF has been inactivated, the mobile station shall set this field to '1'; otherwise, the mobile station shall set this field to '0'. When CON_REF is set to '00000000', this field does not have any significance.

ADD_CON_REF_INCL - Additional connection reference included indicator.

If the GATING_DISCONNECT_IND field is set to '1', the mobile station shall omit this field; otherwise, the mobile station shall include this field and set it as follows:

If at least one occurrence of the ADD_CON_REF field is included in this message, then the mobile station shall set this field to '1'; otherwise, the mobile station shall set this field to '0'.

NUM_ADD_CON_REF - Number of additional connection references.

If the ADD_CON_REF_INCL field is included and set to '1', the mobile station shall include this field and set it to one less than the number of occurrences of the ADD_CON_REF field included in this message; otherwise, the mobile station shall omit this field.

ADD_CON_REF - Additional connection reference.

The mobile station shall set this field to the connection reference corresponding to a service option connection that is requested to be released.

ADD_PURGE_SERVICE - Additional purge service instance indicator.

If the packet data service instance identified by the ADD_CON_REF field has been inactivated, the mobile station shall set this field to '1'; otherwise, the mobile station shall set this field to '0'.

BCMC_INFO_INCL - BCMC information includes indicator.

If the mobile station includes BCMC related fields in this message, the mobile station shall set this field to '1'; otherwise, the mobile station shall set this field to '0'.

NUM_BCMC_PROGRAMS - Number of BCMC Programs

If the BCMC_INFO_INCL field is set to '0', the mobile station shall omit this field; otherwise, the mobile station shall include this field and set it as follows:

If the mobile station is requesting the release of all the BCMC programs being monitored, the mobile station shall set this field to '000000'; otherwise, the mobile station shall set this field to the number of BCMC programs included in this message.

The mobile station shall include NUM_BCMC_PROGRAMS occurrences of the following variable length record:

BCMC_PROGRAM_ID_LEN - Length of BCMC_PROGRAM_ID field

The mobile station shall set this field to one less than the length, in bits, of the BCMC_PROGRAM_ID of this program.

BCMC_PROGRAM_ID - BCMC program Identifier

The length of this field shall be one more than the value of BCMC_PROGRAM_ID_LEN bits.

The mobile station shall set this field to the identifier of the BCMC program corresponding to one or more flows that the mobile station is requesting to release.

BCMC_FLOW_DISCRIMINATOR_LEN - Length of BCMC_FLOW_DISCRIMINATOR field

The mobile station shall set this field to the length, in bits, of the BCMC_FLOW_DISCRIMINATOR of this program. To request release of all flows associated with this BCMC_PROGRAM_ID, the mobile station may set this field to '000'.

NUM_FLOW_DISCRIMINATOR - Number of BCMC flow discriminators

The length of this field shall be determined by the value of the BCMC_FLOW_DISCRIMINATOR_LEN as follows: if BCMC_FLOW_DISCRIMINATOR_LEN is set to '000', this field is omitted; otherwise, the length of this field shall be BCMC_FLOW_DISCRIMINATOR_LEN bits.

The mobile station shall set this field to the number of flow discriminators included for this program minus one.

If NUM_FLOW_DISCRIMINATOR field is included, the mobile station shall include NUM_FLOW_DISCRIMINATOR+1 occurrences of the following variable length record; otherwise, the mobile station shall include 1 occurrence of the following variable length record:

BCMC_FLOW_DISCRIMINATOR – BCMC Flow discriminator.

The length of this field shall be determined by the value of the BCMC_FLOW_DISCRIMINATOR_LEN as follows: if BCMC_FLOW_DISCRIMINATOR_LEN is set to '000', this field is omitted; otherwise, the length of this field shall be BCMC_FLOW_DISCRIMINATOR_LEN bits.

The mobile station shall set this field to the BCMC flow discriminator that is requested to be released.

2.7.2.3.2.30 Resource Release Request Mini Message

MSG_TAG: RRRMM

Field	Length (bits)
GATING_DISCONNECT_IND	1
CON_REF	0 or 8
PURGE_SERVICE	0 or 1

GATING_DISCONNECT_IND - Reverse pilot gating or service disconnect indicator.

If the mobile station requests that reverse pilot gating operation to be performed, the mobile station shall set this field to ‘1’; otherwise (if the mobile station requests that the service option connection specified by CON_REF to be released), the mobile station shall set this field to ‘0’.

CON_REF - Connection reference.

If the GATING_DISCONNECT_IND field is set to ‘1’, the mobile station shall omit this field; otherwise, the mobile station shall include this field and set it as follows:

The mobile station shall set this field to the connection reference corresponding to the service option connection that is requested to be released.

PURGE_SERVICE - Purge service instance indicator.

If the GATING_DISCONNECT_IND field is set to ‘1’, the mobile station shall omit this field; otherwise, the mobile station shall include this field and set it as follows:

If the packet data service instance identified by CON_REF has been inactivated, the mobile station shall set this field to ‘1’; otherwise, the mobile station shall set this field to ‘0’.

2.7.2.3.2.31 User Zone Update Request Message

MSG_TAG: UZURM

Field	Length (bits)
UZID	16

UZID - User Zone identifiers.

The mobile station shall set this field to the $UZID_S$.

2.7.2.3.2.32 Enhanced Origination Message

MSG_TAG: EOM

Field	Length (bits)
TAG	4
CH_IND	3
EXT_CH_IND	0 or 5
SR_ID	3
GLOBAL_EMERGENCY_CALL	1
MS_INIT_POS_LOC_IND	0 or 1
NEW_SINFO_INCL	1
UI_ENCRYPT_REQ	0 or 1
UI_ENCRYPT_SUP	0 or 8
SERVICE_OPTION	16
MORE_SO_INFO_INCL	1
NUM_ALT_SO	0 or 3

NUM_ALT_SO occurrences of the following field:

{ (NUM_ALT_SO)

ALT_SO	16

} (NUM_ALT_SO)

SO_BITMAP_IND	0 or 2
SO_GROUP_NUM	0 or 5
SO_BITMAP	0 or 2^(1+ SO_BITMAP_IND)
DRS	1
PREV_SID_INCL	1
PREV_SID	0 or 15
PREV_NID_INCL	1
PREV_NID	0 or 16

(continues on next page)

Field	**Length (bits)**
PREV_PZID_INCL	1
PREV_PZID	0 or 8
DIALED_DIGS_INCL	1
DIGIT_MODE	0 or 1
NUMBER_TYPE	0 or 3
NUMBER_PLAN	0 or 4
NUM_FIELDS	0 or 8

NUM_FIELDS occurrences of the following field:

{ (NUM_FIELDS)

CHARi	4 or 8

} (NUM_FIELDS)

NUM_RECS	5

NUM_RECS occurrences of the following three-field records:

{ (NUM_RECS)

RECORD_TYPE	8
RECORD_LEN	8
Type-specific fields	8 × RECORD_LEN

} (NUM_RECS)

SYNC_ID_INCL	1
SYNC_ID_LEN	0 or 4
SYNC_ID	0 or (8 × SYNC_ID_LEN)

Field	Length (bits)
ADD_SERV_INSTANCE_INCL	0 or 1
NUM_ADD_SERV_INSTANCE	0 or 3

NUM_ADD_SERV_INSTANCE occurrences of the following record:

{ (NUM_ADD_SERV_INSTANCE)

ADD_SR_ID	3
ADD_DRS	1
ADD_TAG	4
ADD_SERVICE_OPTION_INCL	0 or 1
ADD_SERVICE_OPTION	0 or 16
ADD_NUM_RECS	5

ADD_NUM_RECS occurrences of the following three-field records:

{ (ADD_NUM_RECS)

ADD_RECORD_TYPE	8
ADD_RECORD_LEN	8
Type-specific fields	8 × ADD_RECORD_LEN

} (ADD_NUM_RECS)

} (NUM_ADD_SERV_INSTANCE)

BCMC_INCL	1
BCMC_ORIG_ONLY_IND	0 or 1
AUTH_SIGNATURE_INCL	0 or 1
TIME_STAMP_SHORT_LENGTH	0 or 8
TIME_STAMP_SHORT	Variable
NUM_BCMC_PROGRAMS	0 or 3

NUM_BCMC_PROGRAMS+1 occurrences of the following variable length record:

*{ (*NUM_BCMC_*PROGRAMS*+1*)*

BCMC_PROGRAM_ID_LEN	5
BCMC_PROGRAM_ID	Variable (Value of BCMC_PROGRAM_ID_LEN + 1)
BCMC_FLOW_DISCRIMINATOR_LEN	3

Field	Length (bits)
NUM_FLOW_DISCRIMINATOR	BCMC_FLOW_DISCRIMINATOR_LEN

NUM_FLOW_DISCRIMINATOR+1 or 1 occurrences of the following variable length record:

{ (NUM_FLOW_DISCRIMINATOR+1) or 1

BCMC_FLOW_DISCRIMINATOR	BCMC_FLOW_DISCRIMINATOR_LEN
AUTH_SIGNATURE_IND	0 or 1
AUTH_SIGNATURE_SAME_IND	0 or 1
BAK_ID	0 or 4
AUTH_SIGNATURE	0 or 32

} (NUM_FLOW_DISCRIMINATOR +1) or 1

} (NUM_BCMC_PROGRAMS+1)

TAG – Call initiation transaction identifier.

The mobile station shall set this field to the identifier for the transaction corresponding to SR_ID.

CH_IND – Channel indicator.

The mobile station shall set this field as shown in Table 2.7.2.3.2.32-1, to request physical resources.

Table 2.7.2.3.2.32-1. Channel Indicator

CH_IND (binary)	Channel(s) Requested
000	No additional channels requested.
001	Fundamental Channel.
010	Dedicated Control Channel.
011	Reserved.
100	Continuous Reverse Pilot Channel.
101	Fundamental Channel and Continuous Reverse Pilot Channel.
110	Reserved.
111	Refer to EXT_CH_IND.

EXT_CH_IND - Extended Channel Indicator.

If CH_IND is set to '111, then the mobile station shall set this field as shown in Table 2.7.1.3.2.4-11; otherwise, the mobile station shall omit this field.

SR_ID – Service reference identifier.

If the SYNC_ID_INCL field is set to ‘0’, the mobile station shall set this field as follows:

- If the service instance provides a service reference identifier, the mobile station shall set this field to the service reference identifier specified by the service instance. If the service instance does not provide a service reference identifier, the mobile station shall set this field to the smallest unused service reference identifier value between 1 and 6 (inclusive).

Otherwise, the mobile station shall set this field as follows:

- If the mobile station requests the restoration of a single service option connection from the stored service configuration, the mobile station shall set this field to the corresponding service reference identifier.
- If the mobile station requests the restoration of more than one but not all service option connections from the stored service configuration, the mobile station shall set this field to the service reference identifier corresponding to one of the service option connections to be restored.
- Otherwise (that is, the mobile station requests the restoration of all remaining service option connections from the stored service configuration), the mobile station shall set this field to ‘111’.

GLOBAL_EMERGENCY_CALL – Global emergency call indicator.

The mobile station shall set this field to ‘1’, if the mobile station recognizes that this is an emergency call; otherwise, the mobile station shall set this field to ‘0’.

MS_INIT_POS_LOC_IND – Mobile Initiated Position Location Session indicator.

If the GLOBAL_EMERGENCY_CALL field is set to ‘0’, the mobile station shall omit this field; otherwise, the mobile station shall include this field and shall set it as follows:

The mobile station shall set this field to ‘1’ if $MS\_INIT\_POS\_LOC\_SUP\_IND_S$ is equal to ‘1’ and if the mobile station is to initiate a position location session associated with this emergency call; otherwise, the mobile station shall set this field to ‘0’.

NEW_SINFO_INCL – Encryption fields included.

The mobile station shall set this field to ‘1’ if the encryption related fields are included; otherwise the mobile station shall set this field to ‘0’. The mobile station shall set this field to ‘0’ if the base station does not support encryption or the mobile station does not support any of the encryption modes supported by the base station.

UI_ENCRYPT_REQ – Request for user information encryption on the traffic channel indicator.

If NEW_SINFO_INCL is set to ‘1’, the mobile station shall include this field; otherwise, the mobile station shall omit this field. If this field is included, the mobile station shall set this field to ‘1’ to request user information encryption, and to ‘0’ to request no user information encryption.

UI_ENCRYPT_SUP – User information encryption supported indicator.

If NEW_SINFO_INCL is set to ‘1’, the mobile station shall include this field; otherwise, the mobile station shall omit this field. If this field is included, the mobile station shall set this field to indicate the supported user information encryption algorithms.

This field consists of the subfields shown in Table 2.7.1.3.2.4-9.

The mobile station shall set each subfield to ‘1’ if the corresponding user information encryption algorithm is supported by the mobile station; otherwise, the mobile station shall set the subfield to ‘0’.

The mobile station shall set the RESERVED subfield to ‘000000’.

SERVICE_OPTION – Requested service option for this origination.

The mobile station shall set this field to the value specified in [30], corresponding to the requested service option.

MORE_SO_INFO_INCL – More service option information included.

If $MAX\_NUM\_ALT\_SO_S$ is equal to ‘000’, the mobile station shall set this field to ‘0; otherwise, the mobile station shall set this field as follows:

If any alternate service option number or/and service option bitmap is to be included in this message, the mobile station shall set this field to ‘1’, otherwise, the mobile station shall set this field to ‘0’. In other words, MORE_SO_INFO_INCL is set to ‘1’, if NUM_ALT_SO is included and not set to ‘000’ or/and SO_BITMAP_IND is included and not set to ‘00’.

NUM_ALT_SO – Number of alternative service options.

If MORE_SO_INFO_INCL is set to ‘0’, the mobile station shall omit this field; otherwise, the mobile station shall set this field to the number of supported alternative service options which either have no service option group number assigned or do not belong to the same service option group whose bitmap is include in the message.

The mobile station shall include NUM_ALT_SO occurrences of the following field:

ALT_SO – Alternative service option.

The mobile station shall set this field to the value specified in [30], corresponding to the alternative service option supported by the mobile station. These alternate service options are either have not service option group number assigned or do not belong to the same service option group whose bitmap is included in this message.

SO_BITMAP_IND – SO bitmap indicator.

If MORE_SO_INFO_INCL is set to ‘0’, the mobile station shall omit this field; otherwise, the mobile station shall include this field and set it as defined in Table 2.7.1.3.2.4-10.

SO_GROUP_NUM – Service option group number.

If the field SO_BITMAP_IND is included and not set to ‘00’, the mobile station shall include this field and set this field to the service option group number of which the bitmap is to be included; otherwise, the mobile station shall omit this field.

SO_BITMAP – Service option bitmap.

If the field SO_BITMAP_IND is included and not set to ‘00’, the mobile station shall include the bitmap of size 2^(1+ SO_BITMAP_IND) bits of the service option group number (SO_GROUP_NUM); otherwise, the mobile station shall omit this field;

When the service option bitmap is included, if there are more than (2^(1+SO_BITMAP_IND)) service options defined for the service option group, the mobile station shall include the bitmap containing the least significant bits (2^(1+ SO_BITMAP_IND)) of the service option group.

The mobile station shall set a bit in this bitmap to ‘1’, if the mobile station supports the service option for which this bit represents; otherwise, the mobile station shall set a bit in this bitmap to ‘0’.

DRS – Data ready to send indicator.

If the service instance corresponding to SR_ID has data to send, the mobile station shall set this field to ‘1’; otherwise, the mobile station shall set this field to ‘0’.

PREV_SID_INCL - Previous System Identification (SID) included indicator.

The mobile station shall set this field to '1' if:

- The mobile station determines that the SID has been changed after a packet data dormant handoff, and
- This message includes the main service instance (see [42]).

Otherwise, the mobile station shall set this field to '0'.

PREV_SID - Previous System Identification.

If PREV_SID_INCL is set to '0', the mobile station shall omit this field; otherwise, the mobile station shall include this field and set it as follows:

The mobile station shall set this field to the previous SID.

PREV_NID_INCL - Previous Network Identification (NID) included indicator.

The mobile station shall set this field to '1' if:

- The mobile station determines that NID has been changed after a packet data dormant handoff, and
- This message includes the main service instance (see [42]).

Otherwise, the mobile station shall set this field to '0'.

PREV_NID - Previous Network Identification.

If PREV_NID_INCL is set to '0', the mobile station shall omit this field; otherwise, the mobile station shall include this field and set it as follows:

The mobile station shall set this field to the previous NID.

PREV_PZID_INCL - Previous Packet Zone ID (PZID) included indicator.

The mobile station shall set this field to '1' if:

- The mobile station determines that the Packet Zone ID has been changed after a packet data dormant handoff, and
- This message includes the main service instance (see [42]).

Otherwise, the mobile station shall omit this field.

PREV_PZID - Previous Packet Zone ID.

If PREV_PZID_INCL is set to '0', the mobile station shall omit this field; otherwise, the mobile station shall include this field and set it as follows:

The mobile station shall set this field to the previous PZID.

DIALED_DIGS_INCL – Dialed digits included indicator.

The mobile station shall set this field to ‘1’ if the dialed digits related fields are included in this message; otherwise, the mobile station shall set this field to ‘0’.

DIGIT_MODE – Digit mode indicator.

If the DIALED_DIGS_INCL field is set to ‘0’, the mobile station shall omit this field; otherwise, the mobile station shall include this field and shall set it as follows:

This field indicates whether the dialed digits are 4-bit DTMF codes or 8-bit ASCII codes using a specified numbering plan.

To originate the call using the binary representation of DTMF digits (i.e., CHARi fields are represented in Table 2.7.1.3.2.4-4), the mobile station shall set this field to ‘0’. To originate the call using ASCII characters, the mobile station shall set this field to ‘1’.

NUMBER_TYPE – Type of number.

If the DIALED_DIGS_INCL field is set to ‘0’, or if $P\_REV\_IN\_USE_S < 11$ and DIGIT_MODE is set to ‘0’, the mobile station shall omit this field; otherwise, the mobile station shall include this field and shall set it as follows:

The mobile station shall set this field to the NUMBER_TYPE value shown in Table 2.7.1.3.2.4-2 corresponding to the type of the number as defined in [7], Section 4.5.9.

If this field is included and the mobile station determines that the user has entered an international number (for example, with a leading “+” as specified in [39] for Plus Code Dialing or an international access code), the mobile station should set this field to ‘001’.

NUMBER_PLAN – Numbering plan.

If the DIALED_DIGS_INCL field is set to ‘0’ or if the DIGIT_MODE field is set to ‘0’, the mobile station shall omit this field; otherwise, the mobile station shall include this field and shall set it as follows:

The mobile station shall set this field to the NUMBER_PLAN value shown in Table 2.7.1.3.2.4-3 corresponding to the requested numbering plan as defined in [7], Section 4.5.9.

NUM_FIELDS – Number of dialed digits in this message.

If the DIALED_DIGS_INCL field is set to ‘0’, the mobile station shall omit this field; otherwise, the mobile station shall include this field and shall set it as follows:

The mobile station shall set this field to the number of dialed digits included in this message.

The mobile station shall include NUM_FIELDS occurrences of the following field:

CHARi – A dialed digit or character.

If the DIGIT_MODE field is set to ‘0’, the mobile station shall set each occurrence of this field to the code value shown in Table 2.7.1.3.2.4-4 corresponding to the dialed digit. If the DIGIT_MODE field is set to ‘1’, the mobile station shall set each occurrence of this field to the ASCII representation corresponding to the dialed digit, as specified in [9], with the most significant bit set to ‘0’.

NUM_RECS – Number of records.

The mobile station shall set this field to the number of information records included with this message.

The mobile station shall include NUM_RECS occurrences of the following three-field record.

RECORD_TYPE – Information record type.

The mobile station shall set this field to the record type value shown in Table 2.7.4-1.

The mobile station shall not include the record type for QoS Parameters information record if MOB_QOS_S is equal to ‘0’.

RECORD_LEN – Information record length.

The mobile station shall set this field to the number of octets in the type-specific fields included in this record.

Type-specific fields – Type-specific fields.

The mobile station shall include type-specific fields as specified in 2.7.4.

SYNC_ID_INCL - Service Configuration synchronization identifier included indicator.

The mobile station shall set this field to '1' if the SYNC_ID field is included in this message; otherwise, the mobile station shall set this field to '0'.

If $SYNC\_ID\_SUPPORTED_S$ is equal to '0', the mobile station shall set this field to '0'.

SYNC_ID_LEN - Service Configuration synchronization identifier length indicator.

If the SYNC_ID_INCL field is set to '0', the mobile station shall omit this field; otherwise the mobile station shall include this field and set it as follows:

The mobile station shall set this field to the length of the SYNC_ID field included in this message.

SYNC_ID - Service Configuration synchronization identifier.

If the SYNC_ID_INCL field is set to '0', the mobile station shall omit this field; otherwise, the mobile station shall include this field and set it as follows:

The mobile station shall set this field to the Service Configuration synchronization identifier corresponding to the stored service configuration.

ADD_SERV_INSTANCE_INCL- Additional service instances included indicator.

If SR_ID is included and set to '111', the mobile station shall omit this field; otherwise, the mobile station shall include this field and set it as follows:

If at least one occurrence of the ADD_SR_ID field is included in this message, the mobile station shall set this field to '1'; otherwise, the mobile station shall set this field to '0'.

If SYNC_ID_INCL is equal to '0' and $MAX\_ADD\_SERV\_INSTANCE_S$ is equal to '0', the mobile station shall set this field to '0'.

NUM_ADD_SERV_INSTANCE - Number of additional service instances included.

If ADD_SERV_INSTANCE_INCL is set to '0', the mobile station shall omit this field; otherwise, the mobile station shall include this field and set it to the number of additional service instances included in this message.

If SYNC_ID_INCL is equal to '0', the mobile station shall set this field to a value less than or equal to $MAX\_ADD\_SERV\_INSTANCE_S$.

If ADD_SERV_INSTANCE_INCL is set to '1', the mobile station shall include NUM_ADD_SERV_INSTANCE occurrences of the following variable-field record:

ADD_SR_ID – Additional service reference identifier.

If SYNC_ID_INCL is set to '0', the mobile station shall set this field as follows:

- If the service instance provides a service reference identifier, the mobile station shall set this field to the service reference identifier specified by the service instance. If the service instance does not provide a service reference identifier, the mobile station shall set this field to the smallest unused service reference identifier value between 1 and 6 (inclusive).

Otherwise, the mobile station shall set this field to the service reference identifier corresponding to the service option connection that the mobile station requests to be restored from the stored service configuration.

ADD_DRS – Additional Data Ready to Send indicator.

If the service instance corresponding to the ADD_SR_ID field of this record has data to send, the mobile station shall set this field to '1'; otherwise, the mobile station shall set this field to '0'.

ADD_TAG – Additional call initiation transaction identifier.

The mobile station shall set this field to the identifier for the transaction corresponding to the ADD_SR_ID field of this record.

ADD_SERVICE_OPTION_INCL - Additional service option included indicator.

If SYNC_ID_INCL is set to '1', the mobile station shall omit this field; otherwise, the mobile station shall include this field and set it as follows:

The mobile station shall set this field to '0' if the requested service option number of the service instance corresponding to the ADD_SR_ID field of this record is the same as SERVICE_OPTION; otherwise, the mobile station shall set this field to '1'.

ADD_SERVICE_OPTION – Additional service option number.

If the ADD_SERVICE_OPTION_INCL field of this record is not included or is included and is set to '0', the mobile station shall omit this field; otherwise, the mobile station shall include this field and set it to the value specified in [30], corresponding to the requested service option number of the service instance corresponding to the ADD_SR_ID field of this record.

ADD_NUM_RECS – Additional number of records.

The mobile station shall set this field to the number of information records included in this record for the service instance corresponding to the ADD_SR_ID field in this record.

The mobile station shall include ADD_NUM_RECS occurrences of the following three-field record.

ADD_RECORD_TYPE – Additional information record type.

The mobile station shall set this field to the record type value shown in Table 2.7.4-1.

The mobile station shall not include the record type for QoS Parameters information record if MOB_QOS_S is equal to '0'.

ADD_RECORD_LEN – Additional information record length.

The mobile station shall set this field to the number of octets in the type-specific fields included in this record.

Type-specific fields – Type-specific fields.

The mobile station shall include type-specific fields as specified in 2.7.4.

BCMC_INCL - BCMC information included indicator

If the $P\_REV\_IN\_USE_S$ is less than 11, the mobile station shall omit this field; otherwise, the mobile station shall include this field and set it as follows:

The mobile station shall set this field to '1' if one or more BCMC_PROGRAM_IDs are included in the message; otherwise, the mobile station shall set this field to '0'.

BCMC_ORIG_ONLY_IND - BCMC origination only indicator

If the BCMC_INCL field is not included or is included and is set to '0', the mobile station shall omit this field; otherwise, the mobile station shall include this field and set it as follows:

The mobile station shall set this field to '1' to indicate that this origination is only for BCMC and no point to point call is requested in this message; otherwise the mobile station shall set this field to '0'.

AUTH_SIGNATURE_INCL - Authorization signature included indication.

If the BCMC_INCL field is not included or is included and is set to '0', the mobile station shall omit this field; otherwise, the mobile station shall include this field and set it as follows:

The mobile station shall set this field to '1' to indicate that the authorization signature is included in this message for some of the BCMC flows included in this message; otherwise, the mobile station shall set this field to '0'.

TIME_STAMP_SHORT_LENGTH - Length of time stamp included in this message.

If the AUTH_SIGNATURE_INCL field is not included or is included and is set to '0', the mobile station shall omit this field; otherwise, the mobile station shall include this field and set it as follows:

The mobile station shall set this field to the length of the time stamp, in units of bits, included in this message.

TIME_STAMP_SHORT - Time stamp short.

If the AUTH_SIGNATURE_INCL field is not included or is included and is set to '0', the mobile station shall omit this field; otherwise, the mobile station shall include this field and set it as follows:

The mobile station shall set this field to the TIME_STAMP_SHORT_LENGTH least significant bits of the time stamp parameter used to generate the Authorization signature included in this message.

NUM_BCMC_PROGRAMS - Number of BCMC Programs

If the BCMC_INCL field is not included or is included and is set to '0', the mobile station shall omit this field; otherwise, the mobile station shall include this field and set it as follows:

The mobile station shall set this field to the number of BCMC programs included in this message minus 1.

The mobile station shall include NUM_BCMC_PROGRAMS+1 occurrences of the following variable length record:

BCMC_PROGRAM_ID_LEN - Length of BCMC_PROGRAM_ID field

The mobile station shall set this field to one less than the length, in bits, of the BCMC_PROGRAM_ID of this program.

BCMC_PROGRAM_ID - BCMC program Identifier

The length of this field shall be one more than the value of BCMC_PROGRAM_ID_LEN bits.

The mobile station shall set this field to the identifier of the BCMC program corresponding to one or more flows that the mobile station will continue to monitor or start to monitor upon receiving confirmation of delivery of this message or is requesting transmission.

BCMC_FLOW_DISCRIMINATOR_LEN - Length of BCMC_FLOW_DISCRIMINATOR field

The mobile station shall set this field to the length, in bits, of the BCMC_FLOW_DISCRIMINATOR of this program. To request all flows associated with this BCMC_PROGRAM_ID, the mobile station may set this field to '000'.

NUM_FLOW_DISCRIMINATOR - Number of BCMC flow discriminators

The length of this field shall be determined by the value of the BCMC_FLOW_DISCRIMINATOR_LEN as follows: if BCMC_FLOW_DISCRIMINATOR_LEN is set to '000', this field is omitted; otherwise, the length of this field shall be BCMC_FLOW_DISCRIMINATOR_LEN bits.

The mobile station shall set this field to the number of flow discriminators included for this program minus one.

If NUM_FLOW_DISCRIMINATOR field is included, the mobile station shall include NUM_FLOW_DISCRIMINATOR+1 occurrences of the following variable length record; otherwise, the mobile station shall include 1 occurrence of the following variable length record:

BCMC_FLOW_DISCRIMINATOR – BCMC Flow discriminator.

The length of this field shall be determined by the value of the BCMC_FLOW_DISCRIMINATOR_LEN as follows: if BCMC_FLOW_DISCRIMINATOR_LEN is set to '000', this field is omitted; otherwise, the length of this field shall be BCMC_FLOW_DISCRIMINATOR_LEN bits.

The mobile station shall set this field to the BCMC flow discriminator requested.

AUTH_SIGNATURE_IND - Authorization signature indicator.

If the AUTH_SIGNATURE_INCL field is not included or is included and is set to '0', the mobile station shall omit this field; otherwise, the mobile station shall include this field and set it as follows:

The mobile station shall set this field to '1' to indicate that the authorization signature is included in this message for this BCMC flow; otherwise, the mobile station shall set this field to '0'.

AUTH_SIGNATURE_SAME_IND - Authorization signature same as previous BCMC flow indicator.

If the AUTH_SIGNATURE_IND field is not included or is included and is set to '0', the mobile station shall omit this field; otherwise, the mobile station shall include this field and set it as follows:

The mobile station shall set this field to '1' to indicate that the authorization signature generated for this BCMC flow is the same as the one generated for the BCMC flow listed prior to this BCMC flow in this message; otherwise, the mobile station shall set this field to '0'.

For the first BCMC flow listed in this message, the mobile station shall set this field to '0'.

BAK_ID - BAK identifier.

If the AUTH_SIGNATURE_SAME_IND field is not included or is included and is set to '1', the mobile station shall omit this field; otherwise, the mobile station shall include this field and set it as follows:

The mobile station shall set this field to BAK identifier used to generate the Authorization signature included in this message.

AUTH_SIGNATURE - Authorization signature.

If the AUTH_SIGNATURE_SAME_IND field is not included or is included and is set to '1', the mobile station shall omit this field; otherwise, the mobile station shall include this field and set it as follows:

The mobile station shall set this field to the Authorization signature computed for this BCMC flow as specified in 2.6.13.9.

2.7.2.3.2.33 Extended Flash With Information Message

MSG_TAG: EFWIM

Field	**Length (bits)**
CON_REF_INCL	1
CON_REF	0 or 8
NUM_REC	4

NUM_REC occurrences of the following record:

{ (NUM_REC)

RECORD_TYPE	8
RECORD_LEN	8
Type-specific fields	8 × RECORD_LEN

} (NUM_REC)

CON_REF_INCL – Connection reference included indicator.

The mobile station shall set this field to ‘1’ if the connection reference field is included in this message; otherwise, it shall set this field to ‘0’.

CON_REF – Connection reference.

If the CON_REF_INCL field is set to ‘0’, the mobile station shall omit this field; otherwise, the mobile station shall include this field and shall set it to the value of the connection reference assigned to the service option connection of the call, to which this message corresponds.

NUM_REC – Number of records.

The mobile station shall set this field to the number of information records included with this message.

The mobile station shall include NUM_REC occurrence of the following three-field record:

RECORD_TYPE – Information record type.

The mobile station shall set this field to the record type code shown in Table 2.7.4-1 corresponding to the type of this information record.

RECORD_LEN – Information record length.

The mobile station shall set this field to the number of octets in the type-specific fields of this record.

Type-specific fields – Type-specific fields.

The mobile station shall set these fields as specified in 2.7.4 for this type of information record.

2.7.2.3.2.34 Extended Pilot Strength Measurement Message

MSG_TAG: EPSMM

Field	Length (bits)
REF_PN	9
PILOT_STRENGTH	6
KEEP	1
REF_PILOT_REC_INCL	1
REF_PILOT_REC_TYPE	0 or 3
REF_RECORD_LEN	0 or 3
Type-specific fields	0 or 8 × REF_RECORD_LEN
SF_RX_PWR	5
NUM_PILOTS	4

NUM_PILOTS occurrences of the following record:

{ (NUM_PILOTS)

PILOT_PN_PHASE	15
PILOT_STRENGTH	6
KEEP	1
PILOT_REC_INCL	1
PILOT_REC_TYPE	0 or 3
RECORD_LEN	0 or 3
Type-specific fields	0 or 8 × RECORD_LEN

} (NUM_PILOTS)

RESQ_IND_INCL	1

NUM_PILOTS occurrences of the following record :

{ (0 or NUM_PILOTS)

RESQ_IND	1

} (0 or NUM_PILOTS)

REF_PN – Time reference PN sequence offset.

The mobile station shall set this field to the PN sequence offset of the pilot used by the mobile station to derive its time reference, relative to the zero offset pilot PN sequence in units of 64 PN chips.

PILOT_STRENGTH – Pilot strength in dB.

The mobile station shall set this field to

$$\lfloor -2 \times 10 \log_{10} PS \rfloor,$$

where PS is the strength of the pilot used by the mobile station to derive its time reference (see [2]), measured as specified in 2.6.6.2.2. If this value ($\lfloor -2 \times 10 \log_{10} PS \rfloor$) is less than 0, the mobile station shall set this field to '000000'. If this value is greater than '111111', the mobile station shall set this field to '111111'.

KEEP – Keep pilot indicator.

If the handoff drop timer (see 2.6.6.2.3) corresponding to the pilot used by the mobile station to derive its time reference (see [2]) has expired, the mobile station shall set this field to '0'; otherwise, the mobile station shall set this field to '1'.

REF_PILOT_REC_INCL - Reference pilot information included indicator.

The mobile station shall set this field to '1' if additional reference pilot information listed in the REF_PILOT_REC_TYPE and REF_RECORD_LEN fields are included. The mobile station shall set this field to '0' if the corresponding pilot is the common pilot and there is no additional pilot information included.

REF_PILOT_REC_TYPE - Reference pilot record type.

If REF_PILOT_REC_INCL is set to '1', the mobile station shall set this field to the REF_PILOT_REC_TYPE value shown in Table 2.7.2.3.2.34-1 corresponding to the type of Pilot Record specified by this record.

Table 2.7.2.3.2.34-1. Pilot Record Types

Description	**REF_PILOT_REC_TYPE PILOT_REC_TYPE (binary)**
Auxiliary Pilot	000
All other REF_PILOT_REC_TYPE or PILOT_REC_TYPE values are reserved	

If REF_PILOT_REC_INCL is set to '0', the mobile station shall omit this field.

REF_RECORD_LEN - Reference pilot record length.

If REF_PILOT_REC_INCL is set to '1', the mobile station shall set this field to the number of octets in the type-specific fields of this pilot record.

If REF_PILOT_REC_INCL is set to '0', the mobile station shall omit this field.

Type-specific fields - Pilot record type-specific fields.

If REF_PILOT_REC_INCL is set to '1', the mobile station shall include type-specific fields based on the REF_PILOT_REC_TYPE of this pilot record.

If REF_PILOT_REC_INCL is set to '0', the mobile station shall omit this field.

If REF_PILOT_REC_TYPE is equal to '000', the mobile station shall include the following fields:

Field	Length (bits)
QOF	2
WALSH_LENGTH	3
PILOT_WALSH	(WALSH_LENGTH + 6)
RESERVED	0 to 7 (as needed)

QOF - Quasi-orthogonal function index.

The mobile station shall set this field to the index of the Quasi-orthogonal function of the corresponding Auxiliary Pilot.

WALSH_LENGTH - Length of the Walsh code for the reference pilot.

The mobile station shall set this field to the WALSH_LENGTH value shown in Table 2.7.2.3.2.34-2 corresponding to the length of the Walsh code for the pilot that is used as the Auxiliary Pilot.

Table 2.7.2.3.2.34-2. Walsh Code Length

WALSH_LENGTH (binary)	Length of the Walsh Code
'000'	64
'001'	128
'010'	256
'011'	512
'100' – '111'	Reserved

PILOT_WALSH - Walsh code for the Auxiliary Pilot used by the mobile station to derive its time reference.

The mobile station shall set this field to the Walsh code corresponding to the Auxiliary Pilot.

RESERVED - Reserved bits.

The mobile station shall set all the bits of this field to '0' to make the entire record octet-aligned.

SF_RX_PWR – The received power spectral density of the Serving Frequency.

The mobile station shall set this field to

$$\lceil (10 \times \log_{10}(spec\_density) + 120) / 2 \rceil$$

where *spec_density* is the mobile station received power spectral density of the Serving Frequency, in mW/1.23MHz, averaged over the last N_{12m} frames (see 2.6.6.2.5.1).

If this value is less than 0, the mobile station shall set this field to '00000'.

NUM_PILOTS – Number of pilots reported.

The mobile station shall set this field to the number of pilots being reported other than the reference pilot.

The mobile station shall include NUM_PILOTS occurrences of the following record: one occurrence for each pilot in the Active Set, for each pilot in the Candidate Set whose strength exceeds T_ADD, and for each pilot in the Candidate Set whose strength satisfies the following inequality:

$$10 \times \log_{10} PS > \frac{SOFT\_SLOPE_s}{8} \times 10 \times \log_{10} \sum_{i \in A} PS_i + \frac{ADD\_INTERCEPT_s}{2}$$

where the summation is performed over all pilots currently in the Active Set. The mobile station shall not include these fields for the pilot identified by the REF_PN field.

The mobile station shall order any occurrences of the following record which correspond to pilots in the Active Set such that they occur before any occurrences of the following record which correspond to pilots in the Candidate Set.

PILOT_PN_PHASE – Pilot measured phase.

The mobile station shall set this field to the phase of the pilot PN sequence relative to the zero offset pilot PN sequence of this pilot, in units of one PN chip, as specified in 2.6.6.2.4.

PILOT_STRENGTH – Pilot strength in dB.

The mobile station shall set this field to

$$\lfloor -2 \times 10 \log_{10} PS \rfloor,$$

where PS is the strength of this pilot, measured as specified in 2.6.6.2.2. If this value ($\lfloor -2 \times 10 \log_{10} PS \rfloor$) is less than 0, the mobile station shall set this field to '000000'. If this value is greater than '111111', the mobile station shall set this field to '111111'.

KEEP – Keep pilot indicator.

If the handoff drop timer (see 2.6.6.2.3) corresponding to this pilot has expired, the mobile station shall set this field to '0'; otherwise, the mobile station shall set this field to '1'.

PILOT_REC_INCL - Additional pilot information included indicator.

The mobile station shall set this field to '1' if additional pilot information listed in the PILOT_REC_TYPE and RECORD_LEN fields are included. The mobile station shall set this field to '0' if the corresponding pilot is the common pilot and there is no additional pilot information included.

PILOT_REC_TYPE - Reference pilot record type.

If PILOT_REC_INCL is set to '1', the mobile station shall set this field to the PILOT_REC_TYPE value shown in Table 2.7.2.3.2.34-1 corresponding to the type of Pilot Record specified by this record.

If PILOT_REC_INCL is set to '0', the mobile station shall omit this field.

RECORD_LEN - Pilot record length.

If PILOT_REC_INCL is set to '1', the mobile station shall set this field to the number of octets in the type-specific fields of this pilot record.

If PILOT_REC_INCL is set to '0', the mobile station shall omit this field.

Type-specific fields - Pilot record type-specific fields.

If PILOT_REC_INCL is set to '1', the mobile station shall include type-specific fields based on the PILOT_REC_TYPE of this pilot record as described in 3.7.6.1.

If PILOT_REC_INCL is set to '0', the mobile station shall omit this field.

RESQ_IND_INCL - Call rescue flag included indicator.

The mobile station shall set this field to '1' if a pilot in the mobile station's Active Set was autonomously promoted since the last *Extended Handoff Direction Message*, *General Handoff Direction Message*, or *Universal Handoff Direction Message* was received; otherwise, the mobile station shall set this field to '0'.

If RESQ_IND_INCL is set to '1', the mobile station shall include NUM_PILOTS occurrences of the following one-field record in the same order as the pilots listed above.

RESQ_IND - Call rescue flag.

The mobile station shall set this field to '1' if the corresponding pilot was autonomously promoted to the Active Set since the last *Extended Handoff Direction Message*, *General Handoff Direction Message*, or *Universal Handoff Direction Message* was received; otherwise, the mobile station shall set this field to '0'.

2.7.2.3.2.35 Extended Handoff Completion Message

MSG_TAG: EHOCM

Field	Length (bits)
LAST_HDM_SEQ	2
NUM_PILOTS	4

NUM_PILOTS occurrences of the following record:

{ (NUM_PILOTS)

PILOT_PN	9
PILOT_REC_INCL	1
PILOT_REC_TYPE	0 or 3
RECORD_LEN	0 or 3
Type-specific fields	0 or 8 × RECORD_LEN

} (NUM_PILOTS)

LAST_HDM_SEQ – *Extended Handoff Direction Message*, *General Handoff Direction Message*, or *Universal Handoff Direction Message* sequence number.

The mobile station shall set this field to the value of the HDM_SEQ field from the *Extended Handoff Direction Message*, *General Handoff Direction Message*, or the *Universal Handoff Direction Message* that determined the current Active Set.

NUM_PILOTS – Number of pilots reported.

The mobile station shall set this field to the number of pilots in the current Active Set.

The mobile station shall include NUM_PILOTS occurrences of the following record: one occurrence for each pilot in the Active Set. If the Active Set contains more than one pilot, the mobile station shall include the pilot information in the same order as in the *Extended Handoff Direction Message*, the *General Handoff Direction Message*, or the *Universal Handoff Direction Message* that determined the current Active Set.

PILOT_PN - Pilot PN sequence offset.

The mobile station shall set this field to the pilot PN sequence offset, relative to the zero offset pilot PN sequence in units of 64 PN chips, for this pilot.

PILOT_REC_INCL - Additional pilot information included indicator.

The mobile station shall set this field to '1' if additional pilot information listed in the PILOT_REC_TYPE and RECORD_LEN fields are included. The mobile station shall set this field to '0' if the corresponding pilot is the common pilot and there is no additional pilot information included.

PILOT_REC_TYPE - Reference pilot record type.

If PILOT_REC_INCL is set to '0', the mobile station shall omit this field; otherwise, the mobile station shall set this field to the PILOT_REC_TYPE value shown in Table 2.7.2.3.2.34-1 corresponding to the type of Pilot Record specified by this record.

RECORD_LEN - Pilot record length.

If PILOT_REC_INCL is set to '0', the mobile station shall omit this field; otherwise, the mobile station shall set this field to the number of octets in the type-specific fields of this pilot record.

Type-specific fields - Pilot record type-specific fields.

If PILOT_REC_INCL is set to '0', the mobile station shall omit this field; otherwise, the mobile station shall include type-specific fields based on the PILOT_REC_TYPE of this pilot record as described in 2.7.2.3.2.34.

2.7.2.3.2.36 Security Mode Request Message

MSG_TAG: SMRM

Field	Length (bits)
UI_ENC_INCL	1
UI_ENCRYPT_SUP	0 or 8
NUM_RECS	0 or 3
NUM_RECS + 1 occurrences of the following two field record	
{ (NUM_RECS + 1)	
CON_REF	0 or 8
UI_ENCRYPT_REQ	0 or 1
} (NUM_RECS + 1)	
SIG_ENC_INCL	1
SIG_ENCRYPT_SUP	0 or 8
D_SIG_ENCRYPT_REQ	0 or 1
NEW_SSEQ_H_INCL	1
NEW_SSEQ_H	0 or 24
NEW_SSEQ_H_SIG	0 or 8
MSG_INT_INFO_INCL	1
SIG_INTEGRITY_SUP_INCL	0 or 1
SIG_INTEGRITY_SUP	0 or 8
SIG_INTEGRITY_REQ	0 or 3

UI_ENC_INCL – User information encryption fields included.

The mobile station shall set this field to ‘1’ if the user information encryption related fields are included in this message; otherwise, the mobile station shall set this field to ‘0’.

UI_ENCRYPT_SUP – User information encryption supported indicator.

If UI_ENC_INCL is equal to ‘1’, the mobile station shall include this field; otherwise, the mobile station shall omit this field. If this field is included, the mobile station shall set this field to indicate the supported user information encryption algorithms.

This field consists of the subfields shown in Table 2.7.1.3.2.4-9.

The mobile station shall set each subfield to ‘1’ if the corresponding user information encryption algorithm is supported by the mobile station; otherwise, the mobile station shall set the subfield to ‘0’.

The mobile station shall set the RESERVED subfield to ‘000000’

NUM_REC – Number of user information encryption records.

If UI_ENC_INCL is equal to ‘1’, the mobile station shall include this field; otherwise, the mobile station shall omit this field. If this field is included, the mobile station shall set this field to number of user information encryption records included in this message minus 1.

The mobile station shall include NUM_REC + 1 occurrences of the following two field record

CON_REF – Connection reference corresponding to the service instance requesting for encryption.

If UI_ENC_INCL is equal to ‘1’, the mobile station shall include this field; otherwise, the mobile station shall omit this field. If this field is included, the mobile station shall set this field to the connection reference of the service option connection corresponding to this user information encryption request record.

UI_ENCRYPT_REQ – Request for user information encryption on the traffic channel indicator.

The mobile station shall set this field to ‘1’ to request user information encryption for the user information corresponding to the service option connection identified by CON_REF; otherwise, the mobile station shall set this field to ‘0’.

SIG_ENC_INCL – Signaling encryption fields included.

The mobile station shall set this field to ‘1’ if the following two fields related to signaling encryption fields are included in this message. Otherwise, the mobile station shall set this field to ‘0’.

SIG_ENCRYPT_SUP – Signaling encryption supported indicator.

If SIG_ENC_INCL is equal to ‘1’, the mobile station shall include this field; otherwise, the mobile station shall omit this field. If this field is included, the mobile shall set this field to indicate the supported signaling encryption algorithms supported by the mobile station.

This field consists of the subfields shown in Table 2.7.1.3.2.1-5.

If this field is included, the mobile station shall set the subfields as follows:

The mobile station shall set the CMEA subfield to ‘1’.

The mobile station shall set each other subfield to ‘1’ if the corresponding signaling encryption algorithm is supported by the mobile station; otherwise, the mobile station shall set the subfield to ‘0’.

The mobile station shall set the RESERVED subfield to ‘00000’.

D_SIG_ENCRYPT_REQ – Dedicated channel signaling encryption request indicator.

If SIG_ENC_INCL is equal to ‘1’, the mobile station shall include this field; otherwise, the mobile station shall omit this field. If included the mobile station shall set this field to ‘1’ to request signaling encryption to be turned on for signaling messages sent on f-dsch and r-dsch, and to ‘0’ to request signaling encryption to be turned off for signaling messages sent on f-dsch and r-dsch.

NEW_SSEQ_H_INCL – The NEW_SSEQ included indicator.

The mobile station shall set this field to ‘1’ if NEW_SSEQ_H is included in this message; otherwise, the mobile station shall set this field to ‘0’.

If $\text{MSG\_INTEGRITY\_SUP}_S$ is equal to ‘0’, the mobile station shall set this field to ‘1’ if the mobile station is to include the NEW_SSEQ_H and NEW_SSEQ_H_SIG fields.

If $\text{MSG\_INTEGRITY\_SUP}_S$ is equal to ‘1’, the mobile station shall set this field to ‘0’.

NEW_SSEQ_H – The 24-bit value used to initialize the 24 MSB of crypto-sync.

If NEW_SSEQ_H_INCL is set to ‘1’, the mobile station shall include this field; otherwise, the mobile station shall omit this field. If this field is included, the mobile station shall set this field to a 24-bit value that will be used as the initial value of the 24 MSB of the crypto-sync for both forward and reverse link message integrity.

NEW_SSEQ_H_SIG – The signature of NEW_SSEQ_H

If NEW_SSEQ_H is included, the mobile station shall include this field; otherwise, the mobile station shall omit this field. If this field is included, the mobile station shall set this field to the digital signature of the NEW_SSEQ_H computed as described in 2.3.12.4.5.

MSG_INT_INFO_INCL – Signaling message integrity information included indicator.

If $MSG\_INTEGRITY\_SUP_S$ is equal to '0', the mobile station shall set this field to '0'; otherwise, the mobile station shall set this field to '1'.

SIG_INTEGRITY_SUP_INCL – Signaling message integrity information included indicator.

If MSG_INT_INFO_INCL is set to '0', the mobile station shall omit this field; otherwise, the mobile station shall include this field and set it as follows:

If the mobile station supports other integrity algorithm(s) in addition to the default integrity algorithm, the mobile station shall set this field to '1'; otherwise, the mobile station shall set this field to '0'.

SIG_INTEGRITY_SUP – Signaling integrity algorithm supported by the mobile station.

If SIG_INTEGRITY_SUP_INCL is included and is set to '1', the mobile station shall set this field as follows; otherwise, the mobile station shall omit this field.

The mobile station shall set this field to indicate the supported message integrity algorithm in addition to the default integrity algorithm.

This field consists of the subfields shown in Table 2.7.1.3.2.1-6.

The mobile station shall set each subfield to '1' if the corresponding message integrity algorithm is supported by the mobile station; otherwise, the mobile station shall set the subfield to '0'.

The mobile station shall set the RESERVED subfield to '00000000'.

SIG_INTEGRITY_REQ – Signaling message integrity algorithm request indicator.

If SIG_INTEGRITY_SUP_INCL is included and is set to '1', the mobile station shall set this field as follows; otherwise, the mobile station shall omit this field.

The mobile station shall include this field and set it to the value corresponding to the message integrity algorithm requested as shown in Table 2.7.1.3.2.1-7.

2.7.2.3.2.37 Call Cancel Message

MSG_TAG: CLCM

Field	Length (bits)
TAG	4
ADD_TAG_INCL	1
NUM_ADD_TAG	0 or 3

NUM_ADD_TAG occurrences of the following field:

{ (NUM_ADD_TAG)

ADD_TAG	4

} (NUM_ADD_TAG)

TAG – Transaction identifier.

The mobile station shall set this field to the TAG value in the list TAG_OUTSTANDING_LIST in the *Enhanced Origination Message* sent to originate this call.

ADD_TAG_INCL - Additional call initiation transaction identifiers included indicator.

If at least one occurrence of the ADD_TAG field is included in this message, the mobile station shall set this field to '1'; otherwise, the mobile station shall set this field to '0'.

NUM_ADD_TAG - Number of additional call initiation transaction identifiers included.

If ADD_TAG_INCL is set to '0', the mobile station shall omit this field; otherwise, the mobile station shall include this field and set it to the number of occurrences of the ADD_TAG field included in this message.

If ADD_TAG_INCL is set to '1', the mobile station shall include NUM_ADD_TAG occurrences of the following field:

ADD_TAG – Additional call initiation transaction identifier.

The mobile station shall set this field to the TAG value in the *Enhanced Origination Message*.

2.7.2.3.2.38 Device Information Message

MSG_TAG: DIM

Field	Length (bits)
WLL_DEVICE_TYPE	3
NUM_INFO_RECORDS	5

NUM_INFO_RECORDS occurrences of the following record:

{ (NUM_INFO_RECORDS)

RECORD_TYPE	8
RECORD_LEN	8
Type-specific fields	8 × RECORD_LEN

} (NUM_INFO_RECORDS)

WLL_DEVICE_TYPE – WLL device type indicator.

The mobile station shall set this field to the WLL_DEVICE_TYPE value shown in Table 2.7.1.3.2.1-3 corresponding to the mobile station device type.

NUM_INFO_RECORDS – Number of information records included.

The mobile station shall set this field to the number of information records which are included.

The mobile station shall include one occurrence of the following fields for each information record which is included:

RECORD_TYPE – Information record type.

The mobile station shall set this field to the record type code shown in Table 2.7.4-1 corresponding to the type of this information record.

RECORD_LEN – Information record length.

The mobile station shall set this field to the number of octets in the type-specific fields of this record.

Type-specific fields – Type-specific fields.

The mobile station shall set these fields as specified in 2.7.4 for this type of information record.

2.7.2.3.2.39 Base Station Status Request Message

MSG_TAG: BSSREQM

Field	Length (bits)
QUAL_INFO_TYPE	8
QUAL_INFO_LEN	3
Type-specific fields	8 × QUAL_INFO_LEN
NUM_RECORD	4

NUM_RECORD occurrences of the following record:

{ (NUM_RECORD)

RECORD_TYPE	8
RECORD_LENGTH	8
Record type specific fields	variable
RESERVED	0-7 (as required)

} (NUM_RECORD)

QUAL_INFO_TYPE - Qualification information type.

The mobile station shall set this field to the value shown in Table 3.7.2.3.2.15-1 to show the inclusion of qualification information in the type-specific fields.

QUAL_INFO_LEN - Qualification information length.

The mobile station shall set this field to the number of octets included in the type-specific fields of the qualification information.

Type-specific fields - Type-specific fields.

The mobile station shall set these fields to the qualification information according to the QUAL_INFO_TYPE field.

If QUAL_INFO_TYPE is equal to ‘00000000’, the type-specific fields are omitted.

If QUAL_INFO_TYPE is equal to ‘00000001’, the mobile station shall use the following fixed-length format for the type-specific fields:

Type-specific Field	Length (bits)
BAND_CLASS	5
RESERVED	3

If QUAL_INFO_TYPE is equal to ‘00000010’, the mobile station shall use the following fixed-length format for the type-specific fields:

Type-specific Field	Length (bits)
BAND_CLASS	5
OP_MODE	8
RESERVED	3

BAND_CLASS - Band class.

The mobile station shall set this field to the CDMA band class, as specified in [30].

OP_MODE - Operating mode.

The mobile station shall set this field as shown in Table 3.7.2.3.2.15-3 to specify the operating mode qualification information.

RESERVED - Reserved bits.

The mobile station shall set this field to '000'.

NUM_RECORD - Number of requested record fields in this message.

The mobile station shall set this field to the number of occurrences of RECORD_TYPE field in this message.

The mobile station shall include NUM_RECORD occurrences of the following variable-length record, one for each information record that is requested:

RECORD_TYPE - Information record type.

The mobile station shall set this field to the record type value shown in Table 2.7.2.3.2.39-1 corresponding to the information record requested.

Table 2.7.2.3.2.39-1. Base Station Status Request Information Record Types

Information Record Requested	Record Type
Pilot Information	00000000
Reserved	00000001-11111111

RECORD_LENGTH - Information record length.

The mobile station shall set this field to the length, in octets, of the record type specific fields included in this record.

Record type specific fields - Record type specific fields

The mobile station shall set this field to the type specific fields corresponding to this record type.

If the RECORD_TYPE field is set to '00000000', the mobile station shall set the record type specific field as follows:

Field	Length (bits)
NUM_PILOTS	4
SID_NID_REQ	1

NUM_PILOTS occurrences of the following one field record:

{ NUM_PILOTS)

PILOT_PN	9

}(NUM_PILOTS)

LAT_LONG_REQ	1

NUM_PILOTS - Number of Pilots reported.

The mobile station shall set this field to the number of pilots whose information is requested in this message.

The mobile station shall set this field to a number equal or greater than one.

SID_NID_REQ - SID, NID information requested indicator.

The mobile station shall set this field to ‘1’ if it also requests the SID and NID information for these pilots; otherwise, the mobile station shall set this field to ‘0’.

The mobile station shall include NUM_PILOTS occurrences of the following one-field record:

PILOT_PN - Pilot PN sequence offset index.

The mobile station shall set this field to the pilot PN sequence offset for the base station, in units of 64 PN chips, whose Base Station identification number information is being requested.

LAT_LONG_REQ - Base station LAT/LONG information requested indicator.

The mobile station shall set this field to ‘1’ if it also requests the LAT/LONG information for these pilots; otherwise, the mobile station shall set this field to ‘0’.

RESERVED - Reserved bits.

The mobile station shall add reserved bits as needed in order to make the length of the record equal to an integer number of octets. The mobile station shall set these bits to ‘0’.

2.7.2.3.2.40 CDMA Off Time Report Message

MSG_TAG: COTRM

Field	Length (bits)
CDMA_OFF_TIME_ENABLE	1
CDMA_OFF_TIME_START	0 or 6
CDMA_OFF_TIME_UNIT	0 or 2
CDMA_OFF_TIME_MODE	0 or 1
CDMA_OFF_TIME	0 or 4
CDMA_OFF_TIME_PERIOD	0 or 6

CDMA_OFF_TIME_ENABLE – Off time reporting enable

The mobile station shall set this field to ‘1’ if the mobile station plans to suspend its CDMA Traffic Channel processing. The mobile station shall set this field to ‘0’ to cancel a previously reported CDMA Traffic Channel processing suspension.

CDMA_OFF_TIME_START – The start time when the mobile station moves away from the CDMA Traffic Channel.

If CDMA_OFF_TIME_ENABLE is set to ‘0’, the mobile station shall omit this field; otherwise, the mobile station shall include this field and set it as follows:

The mobile station shall set this field to the System Time, in units of 80 ms (modulo 64), at which the mobile station plans to go away from the CDMA Traffic Channel.

CDMA_OFF_TIME_UNIT – Time unit used in CDMA_OFF_TIME

If CDMA_OFF_TIME_ENABLE is set to ‘0’, the mobile station shall omit this field; otherwise, the mobile station shall include this field and set it as follows:

The mobile station shall set this field to the time unit used in CDMA_OFF_TIME, as specified in Table 2.7.2.3.2.40-1

Table 2.7.2.3.2.40-1. CDMA Off Time Unit

CDMA_OFF_TIME_UNIT (binary)	Time Unit (decimal)
00	80 ms
01	0.5 sec
10	1 sec
11	RESERVED

CDMA_OFF_TIME_MODE – CDMA off time mode

If CDMA_OFF_TIME_ENABLE is set to ‘0’, the mobile station shall omit this field; otherwise, the mobile station shall include this field and set it as follows:

The mobile station shall set this field to ‘1’ if CDMA_OFF_TIME is periodic; otherwise, the mobile station shall set this field to ‘0’.

CDMA_OFF_TIME – The total time that the mobile station plans to be away from the CDMA Traffic Channel.

If CDMA_OFF_TIME_ENABLE is set to ‘0’, the mobile station shall omit this field; otherwise, the mobile station shall include this field and set it as follows:

The mobile station shall set this field to one less than the mobile station’s estimate of the total time it is off the CDMA Traffic Channel, in units of CDMA_OFF_TIME_UNIT.

CDMA_OFF_TIME_PERIOD – The time between CDMA_OFF_TIME

If CDMA_OFF_TIME_MODE is set to ‘0’, the mobile station shall omit this field; otherwise, the mobile station shall include this field and set it as follows:

The mobile station shall set this field to the time minus 10 seconds, in units of 10 seconds, between the beginning of successive CDMA_OFF_TIME.

2.7.2.3.2.41 Authentication Response Message

MSG_TAG: AURSPM

Field	Length (bits)
RES	128
SIG_INTEGRITY_SUP_INCL	1
SIG_INTEGRITY_SUP	0 or 8
SIG_INTEGRITY_REQ	0 or 3
NEW_KEY_ID	2
NEW_SSEQ_H	24

RES – The output, RES, of the User Authentication Function.

The mobile station shall set this field to the output, RES, of the function as specified in Figure 2.3.12.5.2-2. If the UIM returns a RES value with length smaller than 128, the mobile station shall store the RES value in the most significant bits of the RES field and pad the least significant bits with ‘0’s.

SIG_INTEGRITY_SUP_INCL – Signaling message integrity information included indicator.

If the mobile station supports other integrity algorithm(s) in addition to the default integrity algorithm, the mobile station shall set this field to ‘1’; otherwise, the mobile station shall set this field to ‘0’.

SIG_INTEGRITY_SUP – Signaling integrity algorithm supported by the mobile station.

If SIG_INTEGRITY_SUP_INCL is set to ‘1’, the mobile station shall set this field as follows; otherwise, the mobile station shall omit this field.

The mobile station shall set this field to indicate the supported message integrity algorithms in addition to the default integrity algorithm.

This field consists of the subfields shown in Table 2.7.1.3.2.1-6.

The mobile station shall set each subfield to ‘1’ if the corresponding message integrity algorithm is supported by the mobile station; otherwise, the mobile station shall set the subfield to ‘0’.

The mobile station shall set the RESERVED subfield to ‘00000000’.

SIG_INTEGRITY_REQ – Signaling message integrity algorithm requested by the mobile station.

If SIG_INTEGRITY_SUP_INCL is set to ‘1’, the mobile station shall set this field as follows; otherwise, the mobile station shall omit this field.

The mobile station shall include this field and set it to the value corresponding to the message integrity algorithm requested as shown in Table 2.7.1.3.2.1-7.

NEW_KEY_ID – New key identifier.

The mobile station shall set this field as follows:

- If LAST_3G_KEY_ID equals ‘10’, the mobile station shall set this field to ‘11’.
- If LAST_3G_KEY_ID equals ‘11’, the mobile station shall set this field to ‘10’.

NEW_SSEQ_H – The 24-bit value used to initialize the 24 MSB of the crypto-sync.

The mobile station shall set this field to a 24-bit value that will be used as the initial value of the 24 MSB of the crypto-sync for both forward and reverse link message integrity.

2.7.2.3.2.42 Authentication Resynchronization Message

MSG_TAG: AURSYNM

Field	Length (bits)
CON_MS_SQN	48
MAC_S	64

CON_MS_SQN – The concealed sequence number of the authentication vector.

The mobile station shall set this field to the output, CON_MS_SQN, of the function as specified in Figure 2.3.12.5.2-3.

MAC_S – Message authenticaion code for resynchronization.

The mobile station shall set this field to the output, MAC_S, of the function as specified in Figure 2.3.12.5.2-3.

2.7.2.3.2.43 ITBSPM Request Message

MSG_TAG: ITBSPMRM

Field	Length (bits)
BCMC_REQ_TYPE	4
NUM_BCMC_PROGRAMS	0 or 8

If NUM_BCMC_PROGRAMS field is included, NUM_BCMC_PROGRAMS+1 occurrences of the following record

{ (NUM_BCMC_PROGRAMS+1)

BCMC_PROGRAM_ID_LEN	5
BCMC_PROGRAM_ID	Variable (Value of BCMC_PROGRAM_ID_LEN + 1)
BCMC_FLOW_DISCRIMINATOR_LEN	3
NUM_FLOW_DISCRIMINATOR	BCMC_FLOW_DISCRIMINATOR_LEN

NUM_FLOW_DISCRIMINATOR+1 or 1 occurrences of the following variable length record:

{ (NUM_FLOW_DISCRIMINATOR+1) or 1

BCMC_FLOW_DISCRIMINATOR	BCMC_FLOW_DISCRIMINATOR_LEN

} (NUM_FLOW_DISCRIMINATOR+1) or 1

} (NUM_BCMC_PROGRAMS+1)

BCMC_REQ_TYPE – BCMC Request Type.

The mobile station shall set this field as specified in Table 2.7.2.3.2.43-1 to request transmission of ITBSPM over traffic channel.

Table 2.7.2.3.2.43-1 BCMC Request Type

Value (binary)	BCMC Request
0000	Request information for all BCMC_FLOW_IDs
0001	Request information for Traffic Channel BCMC_FLOW_IDs
0010	Request information for BCMC_FLOW_IDs (See section 2.6.13.11) specified in this message
0011-1111	Reserved

NUM_BCMC_PROGRAMS – Number of BCMC programs included.

If BCMC_REQ_TYPE is not set to '0010', the mobile station shall omit this field; otherwise, the mobile station shall include this field and set it as follows.

The mobile station shall set this field to the number of BCMC programs included in this message minus 1.

If the NUM_BCMC_PROGRAMS field is included, the mobile station shall include NUM_BCMC_PROGRAMS+1 occurrences of the following record:

BCMC_PROGRAM_ID_LEN - Length of BCMC_PROGRAM_ID field

The mobile station shall set this field to one less than the length, in bits, of the BCMC_PROGRAM_ID of this program.

BCMC_PROGRAM_ID - BCMC program Identifier

The length of this field shall be one more than the value of BCMC_PROGRAM_ID_LEN bits.

The mobile station shall set this field to the identifier of the BCMC program corresponding to one or more flows that the mobile station will continue to monitor or start to monitor upon receiving confirmation of delivery of this message or is requesting transmission.

BCMC_FLOW_DISCRIMINATOR_LEN - Length of BCMC_FLOW_DISCRIMINATOR field

The mobile station shall set this field to the length, in bits, of the BCMC_FLOW_DISCRIMINATOR of this program. To request all flows associated with this BCMC_PROGRAM_ID, the mobile station may set this field to '000'.

NUM_FLOW_DISCRIMINATOR - Number of BCMC flow discriminators

The length of this field shall be determined by the value of the BCMC_FLOW_DISCRIMINATOR_LEN as follows: if BCMC_FLOW_DISCRIMINATOR_LEN is set to '000', this field is omitted; otherwise, the length of this field shall be BCMC_FLOW_DISCRIMINATOR_LEN bits.

The mobile station shall set this field to the number of flow discriminators included for this program minus one.

If NUM_FLOW_DISCRIMINATOR field is included, the mobile station shall include NUM_FLOW_DISCRIMINATOR+1 occurrences of the following variable length record; otherwise, the mobile station shall include 1 occurrence of the following variable length record:

BCMC_FLOW_DISCRIMINATOR – BCMC Flow Discriminator.

The length of this field shall be determined by the value of the BCMC_FLOW_DISCRIMINATOR_LEN as follows: if BCMC_FLOW_DISCRIMINATOR_LEN is set to '000', this field is omitted; otherwise, the length of this field shall be BCMC_FLOW_DISCRIMINATOR_LEN bits.

The mobile station shall set this field to the discriminator of the BCMC flow.

2.7.2.3.2.44 Handoff Supplementary Information Notification Message

MSG_TAG: HOSINM

Field	Length (bits)
NUM_HO_SUP_REC	8

NUM_HO_SUP_REC occurrences of the following three-field record:

{

HO_SUP_REC_TYPE	3
HO_SUP_REC_LEN	5
HO_SUP_REC	8 x HO_SUP_REC_LEN

}

NUM_HO_SUP_REC - Number of handoff supplementary information record.

The mobile station shall set this field based on the number of handoff supplementary information record included in this message. If the mobile station does not have any handoff supplementary handoff information to report, then the mobile station shall set this field to zero.

HO_SUP_REC_TYPE - Handoff supplementary information record type.

The mobile station shall set this field based on the type of the HO_SUP_REC field included in this message.

HO_SUP_REC_LEN - Handoff supplementary information record length.

The mobile station shall set this field to the number of octets in the fields included in this record following this field.

HO_SUP_REC - Handoff supplementary record.

The handoff supplementary record fields are determined by the value of HO_SUP_REC_TYPE, as described below.

If HO_SUP_REC_TYPE = ‘000’, the HO_SUP_REC field shall be:

PILOT_PN	9
AP_ID_LEN	4
AP_ID	16 x AP_ID_LEN
IOS_MSC_ID	24
IOS_CELL_ID	16
RESERVED	0-7 (as required)

If HO_SUP_REC_TYPE field is set to '000', the base station shall include the following sub-fields in HO_SUP_REC field:

PILOT_PN	-	Pilot PN sequence offset index. The mobile station shall set this field to the pilot PN sequence offset of a base station, in units of 64 PN chips.
AP_ID_LEN	-	Access Point identification length. The base station shall set this field to the length of the access point identification in units of 16 bits.
AP_ID	-	AP_ID of a base station. The mobile station shall set this field to AP_ID value (see 2.6.2.2.19) corresponding to the PILOT_PN reported in this record.
IOS_MSC_ID	-	MSC_ID of a base station. The mobile station shall set this field to MSC_ID value (see 2.6.2.2.19) corresponding to the PILOT_PN reported in this record.
IOS_CELL_ID	-	CELL_ID of a base station. The mobile station shall set this field to CELL_ID value (see 2.6.2.2.19) corresponding to the PILOT_PN reported in this record.
RESERVED	-	Reserved bits. The mobile station shall set all the bits of this field to'0' to make entire record octet aligned.

2.7.2.3.2.45 General Extension Message

MSG_TAG: GEM

The format of this message is the same as when transmitted on r-csch. Please see section 2.7.1.3.2.18.

2.7.3 Orders

Order Messages are sent by the mobile station on the r-csch and on the r-dsch. The general PDU format used on the r-csch is defined in 2.7.1.3.2.2, and the general PDU format used on the r-dsch is defined in 2.7.2.3.2.1. There are many specific types of *Order Messages*, as shown in Table 2.7.3-1.

The mobile station may send on the r-csch any type of order shown in Table 2.7.3-1 with a 'Y' in the first column, but shall not send on the r-csch any type of order with an 'N' in the first column. The mobile station may send on the r-dsch any type of order shown in Table 2.7.3-1 with a 'Y' in the second column, but shall not send on the r-dsch any type of order with an 'N' in the second column. The mobile station shall be capable of sending all types of orders shown in Table 2.7.3-1 with a 'Y' in the sixth column.

An order consists of a 6-bit order code and zero or more order-specific fields. The mobile station shall set the ORDER field in the *Order Message* to the order code shown in Table 2.7.3-1 corresponding to the type of order being sent.

If the order qualification code in the fourth column of Table 2.7.3-1 is '00000000' and there are no other additional fields as shown by an 'N' in the fifth column, the mobile station shall include no order qualification code or other order-specific fields in the *Order Message*. The order qualification code of such a message is implicitly '00000000'.

If the order qualification code is not '00000000' and there are no other additional fields as shown in Table 2.7.3-1 by an 'N' in the fifth column, the mobile station shall include the order qualification code as the only order-specific field in the *Order Message*.

If there are other additional fields as shown in Table 2.7.3-1 by a 'Y' in the fifth column, the mobile station shall include order-specific fields as specified in the corresponding subsection of this section.

Table 2.7.3-1. Order and Order Qualification Codes Used on the r-dsch and the r-csch (Part 1 of 6)

r-csch Order	r-dsch Order	Order Code, ORDER (binary)	Order Qualification Code, ORDQ (binary)	More Fields other than ORDQ	Support Req'd	P_REV_IN_USE[5]	Name/Function
Y	Y	000010	00000000	Y	Y	All	*Base Station Challenge Order* (see 2.7.3.1)
Y	Y	000011	00000000	N	Y	All	*SSD Update Confirmation Order*
Y	Y	000011	00000001	N	Y	All	*SSD Update Rejection Order*
N	Y	000101	0000nnnn	N	Y	All	*Parameter Update Confirmation Order* (where 'nnnn' is the Request Number)
-	-	001011	00000000	-	-	-	*Reserved (Previously: Request Wide Analog Service Order)*
		001011	00000001				*Reserved (Previously: Request Narrow Analog Service Order)*
		001011	00000010				*Reserved (Previously: Request Analog Service Order)*
Y	Y	010000	00000000	N	Y	All	*Mobile Station Acknowledgment Order* (see [4])
N	Y	010011	00000000	Y	N	< 7	*Service Option Request Order* (Band Class 0 only; see 2.7.3.2)
N	Y	010100	00000000	Y	Y	< 7	*Service Option Response Order* (Band Class 0 only; see 2.7.3.3)
Y	Y	010101	00000000	N	Y	All	*Release Order* (normal release)

[5] P_REV_IN_USE equal to "All" implies all values applicable to the Band Class.

Y	Y	010101	00000001	N	Y	All	*Release Order* (with power-down indication)

Table 2.7.3-1. Order and Order Qualification Codes Used on the r-dsch and the r-csch (Part 2 of 6)

r-csch Order	r-dsch Order	Order Code, ORDER (binary)	Order Qualification Code, ORDQ (binary)	More Fields other than ORDQ	Support Req'd	P_REV_IN_USE	Name/Function
N	Y	010101	00000010	N	Y	≥ 6	*Release Order* (with service inactive indication)
N	Y	010101	00000011	Y	N	≥ 11	*Release Order* (with reduced slot cycle mode indication; see 2.7.3.5)
N	Y	010111	00000000	N	N	All	*Long Code Transition Request Order* (request public)
N	Y	010111	00000001	N	N	All	*Long Code Transition Request Order* (request private)
N	Y	010111	00000010	N	Y	All	*Long Code Transition Response Order* (use public)
N	Y	010111	00000011	N	N	All	*Long Code Transition Response Order* (use private)
N	Y	011000	00000000	N	Y	All	*Connect Order*
N	Y	011001	0000nnnn	N	Y	All	*Continuous DTMF Tone Order* (where 'nnnn' is the tone per Table 2.7.1.3.2.4-4).
N	Y	011001	11111111	N	Y	All	*Continuous DTMF Tone Order* (Stop continuous DTMF tone)
N	Y	011101	nnnnnnnn	N	Y	<7	*Service Option Control Order* (Band Class 0 only; the specific control is designated by 'nnnnnnnn' as determined by each service option)
Y	Y	011110	nnnnnnnn	N	N	All	*Local Control Response Order* (specific response as designated by 'nnnnnnnn' as determined by each system)
Y	Y	011111	00000001	Y	Y	All	*Mobile Station Reject Order* (unspecified reason; see 2.7.3.4)
Y	Y	011111	00000010	Y	Y	All	*Mobile Station Reject Order* (message not accepted in this state; see 2.7.3.4)

Table 2.7.3-1. Order and Order Qualification Codes Used on the r-dsch and the r-csch (Part 3 of 6)

r-csch Order	r-dsch Order	Order Code, ORDER (binary)	Order Qualification Code, ORDQ (binary)	More Fields other than ORDQ	Support Req'd	P_REV_IN_USE	Name/Function
Y	Y	011111	00000011	Y	Y	All	*Mobile Station Reject Order* (message structure not acceptable; see 2.7.3.4)
Y	Y	011111	00000100	Y	Y	All	*Mobile Station Reject Order* (message field not in valid range; see 2.7.3.4)
N	Y	011111	00000101	Y	Y	All	*Mobile Station Reject Order* (message type or order code not understood; see 2.7.3.4)
Y	Y	011111	00000110	Y	Y	All	*Mobile Station Reject Order* (message requires a capability that is not supported by the mobile station; see 2.7.3.4)
Y	Y	011111	00000111	Y	Y	All	*Mobile Station Reject Order* (message cannot be handled by the current mobile station configuration; see 2.7.3.4)
Y	Y	011111	00001000	Y	Y	≥ 4	*Mobile Station Reject Order* (response message would exceed allowable length; see 2.7.3.4)
Y	Y	011111	00001001	Y	Y	≥ 4	*Mobile Station Reject Order* (information record is not supported for the specified band class and operating mode; see 2.7.3.4)
N	Y	011111	00001010	Y	Y	≥ 4	*Mobile Station Reject Order* (search set not specified; see 2.6.6.2.5.1)
N	Y	011111	00001011	Y	Y	≥ 4	*Mobile Station Reject Order* (invalid search request; see 2.6.6.2.5.1)

Table 2.7.3-1. Order and Order Qualification Codes Used on the r-dsch and the r-csch (Part 4 of 6)

r-csch Order	r-dsch Order	Order Code, ORDER (binary)	Order Qualification Code, ORDQ (binary)	More Fields other than ORDQ	Support Req'd	P_REV_IN_USE	Name/Function
N	Y	011111	00001100	Y	Y	≥ 4	*Mobile Station Reject Order* (invalid Frequency Assignment; see 2.6.6.2.5.1)
N	Y	011111	00001101	Y	Y	≥ 4	*Mobile Station Reject Order* (search period too short; see 2.6.6.2.5.1)
Y	N	011111	00001110	Y	Y	≥ 6	*Mobile Station Reject Order* (RC does not match with the value in the field DEFAULT_CONFIG; see 2.6.3.3 and 2.6.3.5)
N	Y	011111	00010000	Y	Y	≥ 7	*Mobile Station Reject Order* (call assignment not accepted; see 2.7.3.4)
N	Y	011111	00010001	Y	Y	≥ 7	*Mobile Station Reject Order* (no call control instance present with the specified identifier; see 2.7.3.4)
N	Y	011111	00010010	Y	Y	≥ 7	*Mobile Station Reject Order* (a call control instance is already present with the specified identifier; see 2.7.3.4)
N	Y	011111	00010011	Y	Y	≥ 7	*Mobile Station Reject Order* (TAG received does not match any of the TAG stored; see 2.7.3.4)
Y	Y	011111	00010100	Y	Y	≥ 10	*Mobile Station Reject Order* (UAK not supported)
N	Y	011111	00010101	Y	Y	≥ 9	*Mobile Station Reject Order* (stored configuration already restored at channel assignment)

Table 2.7.3-1. Order and Order Qualification Codes Used on the r-dsch and the r-csch (Part 5 of 6)

r-csch Order	r-dsch Order	Order Code, ORDER (binary)	Order Qualification Code, ORDQ (binary)	More Fields other than ORDQ	Support Req'd	P_REV_IN_USE	Name/Function
Y	Y	011111	00010110	Y	Y	≥ 10	*Mobile Station Reject Order* (The MAC-I field (see [4]) is missing)
Y	Y	011111	00011000	Y	Y	≥ 10	*Mobile Station Reject Order* (The MAC-I field (see [4]) is present but invalid)
Y	Y	011111	00011001	Y	Y	≥ 10	*Mobile Station Reject Order* (The security sequence number is invalid)
Y	Y	011111	00011010	Y	Y	≥ 10	*Mobile Station Reject Order* (The message can not be decrypted)
Y	Y	011111	00011011	Y	Y	≥ 11	*Mobile Station Reject Order* (Requested stored service configuration is not available)
Y	Y	011111	00011100	Y	Y	≥ 11	*Mobile Station Reject Order* (PLCM_TYPE mismatch)
Y	Y	011111	00011101	Y	Y	≥ 12	*Mobile Station Reject Order* (Generel Extension Record contains a record type that is not supported)
Y	Y	011111	00011110	Y	Y	≥ 12	*Mobile Station Reject Order* (Generel Extension Record contains a field value outside its permisibble range)

Y	Y	011111	00011111	Y	Y	≥ 12	*Mobile Station Reject Order* (Generel Extension Record contains a field value that is not supported)
Y	Y	011111	00100000	Y	Y	≥ 12	*Mobile Station Reject Order* (Generel Extension Record not acceptable, unspecified reason)
N	Y	100000	00000000	N	Y	≥ 8	*Call Rescue Cancel Order*

Table 2.7.3-1. Order and Order Qualification Codes Used on the r-dsch and the r-csch (Part 6 of 6)

r-csch Order	r-dsch Order	Order Code, ORDER (binary)	Order Qualification Code, ORDQ (binary)	More Fields other than ORDQ	Support Req'd	P_REV_IN_USE	Name/Function
Y	Y	100001	00000000	N	Y	≥ 10	*Security Mode Completion Order*
Y	N	100010	00000000	Y	N	≥ 11	*Fast Call Setup Order* (indicates mobile station request to operate in a fast call setup mode, see 2.7.3.6)
Y	N	100010	00000001	Y	N	≥ 11	*Fast Call Setup Order* (indicates mobile station response to operate in a fast call setup mode, see 2.7.3.6)
N	Y	100011	00000000	N	Y	≥ 11	*Shared Channel Configuration Order* (requests R-FCH assignment)
N	Y	100011	00000001	N	Y	≥ 11	*Shared Channel Configuration Order* (requests R-FCH release)
All other codes are reserved.							

2.7.3.1 Base Station Challenge Order

Order-Specific Field	Length (bits)
ORDQ	8
RANDBS	32

ORDQ – Order qualification code.

The mobile station shall set this field to '00000000'.

RANDBS – Random challenge data.

The mobile station shall set this field as specified in 2.3.12.1.5.

2.7.3.2 Service Option Request Order

Order-Specific Field	Length (bits)
ORDQ	8
SERVICE_OPTION	16

ORDQ – Order qualification code.

The mobile station shall set this field to ‘00000000’.

SERVICE_OPTION – Service option.

The mobile station shall set this field to the service option code specified in [30], corresponding to the requested or alternative service option.

2.7.3.3 Service Option Response Order

Order-Specific Field	Length (bits)
ORDQ	8
SERVICE_OPTION	16

ORDQ – Order qualification code.

The mobile station shall set this field to '00000000'.

SERVICE_OPTION – Service option.

The mobile station shall set this field to the service option code specified in [30], corresponding to the accepted service option, or to '0000000000000000' to reject the proposed service option. See 2.6.4.1.2.2.1.

2.7.3.4 Mobile Station Reject Order

Order-Specific Field	Length (bits)
ORDQ	8
REJECTED_TYPE	8

If the order is sent on the Access Channel or Enhanced Access Channel and

REJECTED_TYPE is ‘00000111’,

or if the order is sent on the Reverse Traffic Channel and

REJECTED_TYPE is ‘00000001’,

the order-specific fields also include the following two fields:

RESERVED_1	2
REJECTED_ORDER	6
REJECTED_ORDQ	8

If the order is sent on the Reverse Traffic Channel and

REJECTED_TYPE is ‘00001100’,

the order-specific fields also include the following field:

REJECTED_PARAM_ID	16

If the order is sent on the Access Channel or Enhanced Access Channel and

REJECTED_TYPE is ‘00001100’,

or if the order is sent on the Reverse Traffic Channel and

REJECTED_TYPE is ‘00000011’, ‘00101000’, ‘00001110’, or ‘00101010’,

the order-specific fields also include the following field:

REJECTED_RECORD	8

If the ORDQ is ‘00010000’, ‘00010001’, or ‘00010010’, the order-specific fields also include the following fields:

CON_REF	8

If the ORDQ is ‘00010011’, the order-specific fields also include the following fields:

CON_REF	8
TAG	4

REJECTED_PDU_TYPE	0 or 2
RESERVED_2	0 - 7 (as needed)

ORDQ – Order qualification code.

The mobile station shall set this field to the ORDQ value shown in Table 2.7.3-1 corresponding to the reason for rejecting the message.

REJECTED_TYPE – Message type of rejected message.

The mobile station shall set this field to the value of the MSG_TYPE or the MSG_ID (see [4]) field of the message being rejected.

If the MSG_TYPE or the MSG_ID (see [4]) field is not 8 bits, the mobile station shall set the least significant bits of this field to the value of the MSG_TYPE field and set all the remaining bits to '0'.

RESERVED_1 - Reserved bits.

The mobile station shall set this field to '00'.

REJECTED_ORDER – Order type of rejected message.

If the rejected message was an *Order Message*, the mobile station shall set this field to the value of the ORDER field in the rejected message.

Otherwise, the mobile station shall omit this field.

REJECTED_ORDQ – Order qualification code of rejected message.

If the rejected message was an *Order Message* including an ORDQ field, the mobile station shall set this field to the value of the ORDQ field in the rejected message. If the rejected message was an *Order Message* not including an ORDQ field, the mobile station shall set this field to '00000000'.

Otherwise, the mobile station shall omit this field.

REJECTED_PARAM_ID – Parameter identification of the rejected parameter.

If the rejected message was a *Set Parameters Message*, the mobile station shall set this field to the PARAMETER_ID of the first parameter for which the requested operation could not be completed.

Otherwise, the mobile station shall omit this field.

REJECTED_RECORD – Record type of the rejected information record.

If the rejected message was a *Feature Notification Message*, an *Alert With Information Message*, *Extended Alert With Information Message*, *Extended Flash With Information Message*, or a *Flash With Information Message*, the mobile station shall set this field to the RECORD_TYPE field of the first information record that could not be accepted.

Otherwise, the mobile station shall omit this field.

CON_REF – Connection reference.

The mobile station shall set this field to the value of the connection reference of the service option connection corresponding to the call.

TAG – Transaction identifier.

The mobile station shall set this field to the transaction identifier (received from the base station) of the call assignment being rejected.

REJECTED_PDU_TYPE – PDU type of the rejected message.

If $P\_REV\_IN\_USE_S$ is less than six, the mobile station shall omit this field; otherwise, the mobile station shall set this field to the REJECTED_PDU_TYPE code shown in Table 2.7.3.4-1 corresponding to the PDU type of the message being rejected.

Table 2.7.3.4-1. REJECTED_PDU_TYPE codes

REJECTED_PDU_TYPE (binary)	Description
00	20 ms regular message
01	5 ms mini message
01	Reserved
11	Reserved

RESERVED_2 - Reserved bits.

The mobile station shall add reserved bits as needed in order to make the total length of this record containing order-specific fields equal to an integer number of octets. The mobile station shall set these bits to ‘0’.

2.7.3.5 Release Order

Order-Specific Field	Length (bits)
ORDQ	8

If the ORDQ is '00000011', the mobile station shall include the following order-specific record:

RSC_MODE_IND	1
RSCI	0 or 4
RSC_END_TIME_UNIT	0 or 2
RSC_END_TIME_VALUE	0 or 4

ORDQ – Order qualification code.

The mobile station shall set this field to the order qualification code, in accordance with Table 2.7.3-1.

RSC_MODE_IND – Reduced slot cycle mode indicator.

If ORDQ is equal to '00000011', the mobile station shall include this field and set it as specified below; otherwise, the mobile station shall omit this field.

The mobile station shall set this field to '1' to indicate that it will operate in the reduced slot cycle mode following release of the traffic channel; otherwise, the mobile station shall set this field to '0'.

RSCI – Reduced slot cycle index.

If RSC_MODE_IND is included and equal to '1', the mobile station shall include this field and set it to the value of the reduced slot cycle index, as specified in Table 2.7.1.3.2.1-8; otherwise, the mobile station shall omit this field.

The mobile station shall set this field to a value less than the registered slot cycle index, SLOT_CYCLE_INDEX_REG.

RSC_END_TIME_UNIT – Reduced slot cycle mode end time unit.

If RSC_MODE_IND is equal to '0', the mobile station shall omit this field; otherwise, the mobile station shall set this field according to Table 2.7.3.5-1 to indicate the units of the RSC_END_TIME_VALUE field.

Table 2.7.3.5-1. RSC_END_TIME_UNIT and MAX_RSC_END_TIME_UNIT values

Field (binary)	Description
00	unit is 4 seconds
01	unit is 20 seconds
10	unit is 100 seconds
11	RESERVED

RSC_END_TIME_VALUE – Reduced slot cycle mode end time value.

If RSC_MODE_IND is equal to '0', the mobile station shall omit this field; otherwise, the mobile station shall include this field and set it as follows:

The mobile station shall set this field to the system time, in units of time specified by RSC_END_TIME_UNIT(modulo 16), at which the mobile station is to exit the reduced slot cycle mode.

2.7.3.6 Fast Call Setup Order

Order-Specific Field	Length (bits)
ORDQ	8
RSC_MODE_IND	1
RSCI	0 or 4
RSC_END_TIME_UNIT	0 or 2
RSC_END_TIME_VALUE	0 or 4

ORDQ – Order qualification code.

The mobile station shall set this field to the ORDQ value shown in Table 2.7.3-1.

RSC_MODE_IND – Reduced slot cycle mode indicator.

The mobile station shall set this field to ‘1’ to indicate that it will operate in the reduced slot cycle mode; otherwise, the mobile station shall set this field to ‘0’.

RSCI - Reduced slot cycle index.

If RSC_MODE_IND is set to ‘0’, the mobile station shall omit this field; otherwise, the mobile station shall include this field and set it to the value of the reduced slot cycle index, as specified in Table 2.7.1.3.2.1-8.

The mobile station shall set this field to a value less than the registered slot cycle index, SLOT_CYCLE_INDEX_REG.

RSC_END_TIME_UNIT – Reduced slot cycle mode end time unit.

If RSC_MODE_IND is equal to ‘0’, the mobile station shall omit this field; otherwise, the mobile station shall set this field according to Table 2.7.3.5-1 to indicate the units of the RSC_END_TIME_VALUE field.

RSC_END_TIME_VALUE – Reduced slot cycle mode end time value.

If RSC_MODE_IND is set to ‘0’, the mobile station shall omit this field; otherwise, the mobile station shall include this field and set it as follows:

The mobile station shall set this field to the system time, in units of time specified by RSC_END_TIME_UNIT(modulo 16), at which the mobile station is to exit the reduced slot cycle mode.

2.7.4 Information Records

On the r-csch, information records may be included in the *Status Response Message*, the *Extended Status Response Message*, and the *Device Information Message*. On the r-dsch, information records may be included in the *Origination Continuation Message*, the *Enhanced Origination Message*, the *Flash With Information Message*, the *Extended Flash With Information Message*, the *Service Request Message*, the *Service Response Message*, the *Status Message*, and the *Status Response Message*. Table 2.7.4-1 lists the information record type values that may be used with each message type. The following sections describe the contents of each of the record types in detail.

Table 2.7.4-1. Information Record Types (Part 1 of 3)

Information Record	Record Type (binary)	QUAL_INFO_TYPE (binary)	Message Type	r-csch	r-dsch	P_REV_IN_USE[6]
Reserved	00000001	-	None	-	-	-
Reserved for Obsolete Identification	00000010	-				-
Keypad Facility	00000011	-	Flash	N	Y	All
Called Party Number	00000100	-	Flash	N	Y	All
Calling Party Number	00000101	-	Flash	N	Y	All
		-	Origination Continuation	N	Y	
		-	Enhanced Origination Message	N	Y	
Reserved for Obsolete Identification	00000110	-	-	-	-	-
Call Mode	00000111	00000000	Status [1]	N	Y	< 7
Terminal Information	00001000	00000010	Status [1]	Y	Y	All
Roaming Information	00001001	00000010	Status [1]	Y	Y	All
Security Status	00001010	00000000	Status [1]	N	Y	All
Connected Number	00001011		Flash	N	Y	All
IMSI	00001100	00000000	Status [1]	Y	Y	All
ESN	00001101	00000000	Status [1]	Y	Y	All
Band Class Information	00001110	00000000	Status [2]	Y	Y	1, ≥ 3
Power Class Information	00001111	00000010	Status [2]	Y	Y	1, ≥ 3
Operating Mode Information	00010000	00000001	Status [2]	Y	Y	1, ≥ 3
Service Option Information	00010001	00000010	Status [2]	Y	Y	1, ≥ 3
Multiplex Option Information	00010010	00000010	Status [2]	Y	Y	1, ≥ 3
Service Configuration Information	00010011	00000000	Status [2]	N	Y	1, ≥ 3
		-	Service Request	N	Y	
		-	Service Response	N	Y	

[6] P_REV_IN_USE equal to “All” implies all values applicable to the Band Class.

Table 2.7.4-1. Information Record Types (Part 2 of 3)

Information Record	Record Type (binary)	QUAL_INFO_TYPE (binary)	Message Type	r-csch	r-dsch	P_REV_IN_USE
Called Party Subaddress	00010100	-	Flash	N	Y	≥ 4
		-	Origination Continuation	N	Y	
		-	Enhanced Origination Message	N	Y	
Calling Party Subaddress	00010101	-	Flash	N	Y	≥ 4
		-	Origination Continuation	N	Y	
		-	Enhanced Origination Message	N	Y	
Connected Subaddress	00010110	-	Flash	N	Y	≥ 4
Power Control Information	00010111	00000000	Status [2]	Y	Y	≥ 4
IMSI_M	00011000	00000000	Status [2]	Y	Y	≥ 4
IMSI_T	00011001	00000000	Status [2]	Y	Y	≥ 4
Capability Information	00011010	00000000	Status [2]	Y	Y	≥ 4
Channel Configuration Capability Information	00011011	00000000	Status [2]	Y	Y	≥ 6
Extended Multiplex Option Information	00011100	00000000	Status [2]	Y	Y	≥ 6
Reserved for Obsolete Identification	00011101	-	-	-	-	-
Geo-Location Capability	00011110	00000000	Status [2]	Y	Y	≥ 6
Band Subclass Information	00011111	00000001	Status [2]	Y	Y	≥ 6
Global Emergency Call	00100000	-	Flash	N	Y	≥ 7
Hook Status	00100001	-	DIM	Y	Y	≥ 7
		00000000	Status [2]	Y	Y	
QoS Parameters	00100010	-	Origination Continuation	N	Y	≥ 7
		-	Enhanced Origination	N	Y	
Encryption Capability	00100011	00000000	Status [2]	Y	Y	≥ 7

Table 2.7.4-1. Information Record Types (Part 3 of 3)

Information Record	Record Type (binary)	QUAL_INFO_TYPE (binary)	Message Type	r-csch	r-dsch	P_REV_IN_USE
Signaling Message Integrity Capability	00100100	00000000	Status [2]	Y	Y	≥ 10
UIM_ID	00100101	00000000	Status [2]	Y	Y	≥ 9
ESN_ME	00100110	00000000	Status [2]	Y	Y	≥ 9
MEID	00100111	00000000	Status [2]	Y	Y	≥ 11
Extended Keypad Facility	00101000	-	Flash	N	Y	≥ 11
SYNC_ID	00101001	00000000	Status [2]	Y	Y	≥ 11
Extended Terminal Information	00101010	00000010	Status [2]	Y	Y	≥ 11
Extended Service Option Information	00101011	00000010	Status [2]	Y	Y	≥ 11
Band Class and Band Subclass Information	00101100	00000000	Status [2]	Y	Y	≥ 11
EXT_UIM_ID	00101101	00000000	Status [2]	Y	Y	≥ 11
MEID_ME	00101110	00000000	Status [2]	Y	Y	≥ 12
Additional Geo-Location Capability	00101111	00000000	Status [2]	Y	Y	≥ 12
Extended Record Type — International	11111110	-	Country-Specific			1, ≥ 4

All other record type values are reserved.

"Flash" refers to either the *Flash With Information Message* or the *Extended Flash With Information Message*.

"DIM" refers to the *Device Information Message*.

[1] This information record may be included in a *Status Message*, a *Status Response Message*, or an *Extended Status Response Message*.

[2] This information record may be included in a *Status Response Message* or an *Extended Status Response Message*.

2.7.4.1 Reserved

2.7.4.2 Keypad Facility

This information record can be included in a *Flash With Information Message* and allows the user to send characters entered via a keyboard or other such terminal.

Type-Specific Field	**Length (bits)**
One or more occurrences of the following field:	
{	
CHARi	8
}	

CHARi – Character.

The mobile station shall include one occurrence of this field for each character entered. The mobile station shall set each occurrence of this field to the ASCII representation corresponding to the character entered, as specified in [9], with the most significant bit set to ‘0’.

2.7.4.3 Called Party Number

This information record identifies the called party's number.

Type-Specific Field	Length (bits)
NUMBER_TYPE	3
NUMBER_PLAN	4
Zero or more occurrences of the following field:	
{	
CHARi	8
}	
RESERVED	1

NUMBER_TYPE – Type of number.

The mobile station shall set this field to the NUMBER_TYPE value shown in Table 2.7.1.3.2.4-2 corresponding to the type of the called number, as defined in [7], Section 4.5.9.

If the mobile station determines that the user has entered an international number (for example, with a leading "+" as specified in [39] for Plus Code Dialing or an international access code), the mobile station should set this field to '001'.

NUMBER_PLAN – Numbering plan.

The mobile station shall set this field to the NUMBER_PLAN value shown in Table 2.7.1.3.2.4-3 corresponding to the numbering plan used for the called number, as defined in [7], Section 4.5.9.

CHARi – Character.

The mobile stations shall include one occurrence of this field for each character in the called number. The mobile station shall set each occurrence of this field to the ASCII representation corresponding to the character, as specified in [9], with the most significant bit set to '0'.

RESERVED – Reserved bit.

The mobile station shall set this field to '0'.

2.7.4.4 Calling Party Number

This information record can be included in a *Flash With Information Message* and identifies the calling party's number.

Type-Specific Field	**Length (bits)**
NUMBER_TYPE	3
NUMBER_PLAN	4
PI	2
SI	2

Zero or more occurrences of the following field:

{

CHARi	8

}

RESERVED	5

NUMBER_TYPE – Type of number.

The mobile station shall set this field to the NUMBER_TYPE value shown in Table 2.7.1.3.2.4-2 corresponding to the type of the calling number, as defined in [7], Section 4.5.9.

If the mobile station determines that this number is an international number (for example, with a leading "+" as specified in [39] for Plus Code Dialing or an international access code), the mobile station should set this field to '001'.

NUMBER_PLAN – Numbering plan.

The mobile station shall set this field to the NUMBER_PLAN value shown in Table 2.7.1.3.2.4-3 corresponding to the numbering plan used for the calling number, as defined in [7], Section 4.5.9.

PI – Presentation indicator.

This field indicates whether or not the calling number should be displayed.

The mobile station shall set this field to the PI value shown in Table 2.7.4.4-1 corresponding to the presentation indicator, as defined in [7], Section 4.5.9.

Table 2.7.4.4-1. Presentation Indicators

Description	PI (binary)
Presentation allowed	00
Presentation restricted	01
Number not available	10
Reserved	11

SI – Screening indicator.

This field indicates how the calling number was screened.

The mobile station shall set this field to the SI value shown in Table 2.7.4.4-2 corresponding to the screening indicator value, as defined in [7], Section 4.5.9.

Table 2.7.4.4-2. Screening Indicators

Description	SI (binary)
User-provided, not screened	00
User-provided, verified and passed	01
User-provided, verified and failed	10
Network-provided	11

CHARi – Character.

The mobile stations shall include one occurrence of this field for each character in the calling number. The mobile station shall set each occurrence of this field to the ASCII representation corresponding to the character, as specified in [9], with the most significant bit set to ‘0’.

RESERVED – Reserved bits.

The mobile station shall set this field to ‘00000’.

2.7.4.5 Reserved

2.7.4.6 Call Mode

This information record can be included in a *Status Message* or a *Status Response Message* to return the mobile station's preferred call mode and call-related information.

If $P\_REV\_IN\_USE_S$ is equal to or greater than seven, this information record will not be requested by the base station (see 3.7.2.3.2.15 & 3.7.4.4).

Type-Specific Field	**Length (bits)**
ORIG_MODE	1
PRI_SERVICE	16
SEC_SERVICE	16
RESERVED	7

ORIG_MODE – Origination mode indicator.

If the current call is a mobile-originated call, the mobile station shall set this field to ‘0’. If the current call is a mobile-terminated call, the mobile station shall set this field to ‘1’.

PRI_SERVICE – Primary service option.

The mobile station shall set this field to the value specified in [30], corresponding to the current primary service option. If no primary service option is active, the mobile station shall set this field to ‘0000000000000000’.

SEC_SERVICE – Secondary service option.

The mobile station shall set this field to the value specified in [30], corresponding to the current secondary service option. If no secondary service option is active, the mobile station shall set this field to ‘0000000000000000’.

RESERVED – Reserved bits.

The mobile station shall set this field to ‘0000000’.

2.7.4.7 Terminal Information

This information record can be included in a *Status Message*, a *Status Response Message*, or an *Extended Status Response Message* to return configuration information about the mobile station.

Type-Specific Field	**Length (bits)**
MOB_P_REV	8
MOB_MFG_CODE	8
MOB_MODEL	8
MOB_FIRM_REV	16
SCM	8
LOCAL_CTRL	1
SLOT_CYCLE_INDEX	3

One or more occurrences of the following field:

{

SERVICE_OPTION	16

}

SIGN_SLOT_CYCLE_INDEX	0 or 1
RESERVED	0 – 7 (as needed)

MOB_P_REV – Protocol revision of the mobile station.

If the status request does not specify a band class, the mobile station shall set this field to '00001100'.; otherwise, the mobile station shall set this field to the MOB_P_REV associated with the requested band class and operating mode.

MOB_MFG_CODE – Manufacturer code.

This field identifies the manufacturer of the mobile station.

The mobile station shall set this field to the manufacturer code assigned to its manufacturer.

MOB_MODEL – Model number.

This number is assigned by the manufacturer for a particular model.

The mobile station shall set this field to the model number assigned by the manufacturer for this mobile station.

MOB_FIRM_REV – Firmware revision number.

This number is assigned by the manufacturer for a particular firmware version.

The mobile station shall set this field to the revision number assigned by the manufacturer for the firmware version running in this mobile station.

SCM – Station class mark.

The mobile station shall set this field to its station class mark. See 2.3.3.

LOCAL_CTRL – Local control indicator.

If local control is enabled, the mobile station shall set this field to '1'. If local control is disabled, the mobile station shall set this field to '0'. See [6].

SLOT_CYCLE_INDEX – Slot cycle index.

If the requested operating mode is not CDMA or the mobile station is not configured for slotted mode operation, the mobile station shall set this field to '000'; otherwise, the mobile station shall set this field as follows.

If $P\_REV\_IN\_USE_S$ is less than eleven, the mobile station shall set this field to max (0, SLOT_CYCLE_INDEX_REG) (see 2.6.2.1.1).

If $P\_REV\_IN\_USE_S$ is greater or equal to eleven, the mobile station shall set this field to the absolute value of the registered slot cycle index, SLOT_CYCLE_INDEX_REG (see 2.6.2.1.1). The sign of the registered slot cycle, SLOT_CYCLE_INDEX_REG, is specified in the SIGN_SLOT_CYCLE_INDEX field of this message (see Table 2.7.1.3.2.1-8).

SERVICE_OPTION – Supported service option.

If the requested operating mode is CDMA, the mobile station shall include one occurrence of this field for each service option supported by the mobile station (see [30]); otherwise, the mobile station shall include one occurrence of this field with the value set to '0000000000000000'.

SIGN_SLOT_CYCLE_INDEX – Sign of the slot cycle index.

If the SLOT_CYCLE_INDEX field is set to '000', the mobile station shall omit this field; otherwise, the mobile station shall include this field and set it as follows:

The mobile station shall set this field as specified in Table 2.7.1.3.2.1-8 to the sign of the registered slot cycle index, SLOT_CYCLE_INDEX_REG (see 2.6.2.1.1). The absolute value of the registered slot cycle index, SLOT_CYCLE_INDEX_REG, is specified in the SLOT_CYCLE_INDEX field of this message.

RESERVED – Reserved bits.

The mobile station shall add reserved bits as needed in order to make the length of the entire information record equal to an integer number of octets. The mobile station shall set these bits to ‘0’.

2.7.4.8 Roaming Information

This information record can be included in a *Status Message*, a *Status Response Message*, or an *Extended Status Response Message* to return roaming information about the mobile station.

Type-Specific Field	**Length (bits)**
ACCOLC	4
MOB_TERM_HOME	1
MOB_TERM_FOR_SID	1
MOB_TERM_FOR_NID	1

Zero or more occurrences of the following record:

{

SID	15
NID	16

}

RESERVED	0 - 7 (as needed)

ACCOLC – Overload class.

The mobile station shall set this field to the access overload class assigned to the mobile station.

MOB_TERM_HOME – Home (non-roaming) registration enable indicator.

If the mobile station is configured to receive mobile station terminated calls when not roaming, the mobile station shall set this field to ‘1’; otherwise, the mobile station shall set this field to ‘0’. See 2.6.5.3.

MOB_TERM_FOR_SID – Foreign SID roaming registration enable indicator.

If the mobile station is configured to receive mobile station terminated calls when it is a foreign SID roamer, the mobile station shall set this field to ‘1’; otherwise, the mobile station shall set this field to ‘0’. See 2.6.5.3.

MOB_TERM_FOR_NID – Foreign NID roaming registration enable indicator.

If the mobile station is configured to receive mobile station terminated calls when it is a foreign NID roamer, the mobile station shall set this field to ‘1’; otherwise, the mobile station shall set this field to ‘0’. See 2.6.5.3.

The mobile station shall include one occurrence of the following two-field record for each home (non-roaming) (SID, NID) pair (see 2.6.5.2):

SID – System identification.

The mobile station shall set this field to the SID value for this (SID, NID) pair.

NID – Network identification.

The mobile station shall set this field to the NID value for this (SID, NID) pair.

RESERVED – Reserved bits.

The mobile station shall add reserved bits as needed in order to make the length of the entire information record equal to an integer number of octets. The mobile station shall set these bits to '0'.

2.7.4.9 Security Status

This information record can be included in a *Status Message* or a *Status Response Message* to return the authentication, encryption, and voice privacy modes of the mobile station.

Type-Specific Field	**Length (bits)**
AUTH_MODE	2
ENCRYPT_MODE	2
PRIVATE_LCM	1
RESERVED	3

AUTH_MODE – Authentication mode.

If the mobile station provided standard authentication information at the initiation of this call, the mobile station shall set this field to '01'; otherwise, the mobile station shall set this field to '00'. All other values are reserved.

ENCRYPT_MODE – Message encryption mode.

The mobile station shall set this field to the value shown in Table 3.7.2.3.2.8-2 corresponding to the message encryption mode currently in use for this call.

PRIVATE_LCM – Private long code mask indicator.

If the mobile station is using the private long code mask for this call, the mobile station shall set this field to '1'. If the mobile station is using the public long code mask for this call, the mobile station shall set this field to '0'.

RESERVED – Reserved bits.

The mobile station shall set this field to '000'.

2.7.4.10 Connected Number

This information record can be included in a *Flash With Information Message* to identify the responding party to a call.

Type-Specific Field	**Length (bits)**
NUMBER_TYPE	3
NUMBER_PLAN	4
PI	2
SI	2
Zero or more occurrences of the following field:	
{	
CHARi	8
}	
RESERVED	5

NUMBER_TYPE – Type of number.

The mobile station shall set this field to the NUMBER_TYPE value shown in Table 2.7.1.3.2.4-2 corresponding to the type of the connected number as defined [7], Section 4.5.9.

If the mobile station determines that this number is an international number (for example, with a leading "+" as specified in [39] for Plus Code Dialing or an international access code), the mobile station should set this field to '001'.

NUMBER_PLAN – Numbering plan.

The mobile station shall set this field to the NUMBER_PLAN value shown in Table 2.7.1.3.2.4-3 corresponding to the numbering plan used for the connected number, as defined, in [7], Section 4.5.9.

PI – Presentation indicator.

This field indicates whether or not the connected number should be displayed. The mobile station shall set this field to the PI value shown in Table 2.7.4.4-1 corresponding to the presentation indicator, as defined in [7], Section 4.5.9.

SI – Screening indicator.

This field indicates how the connected number was screened. The mobile station shall set this field to the SI value shown in Table 2.7.4.4-2 corresponding to the screening indicator value, as defined in [7], Section 4.5.9.

CHARi – Character.

The mobile station shall include one occurrence of this field for each character in the connected number. The mobile station shall set each occurrence of this field to the ASCII representation corresponding to the character, as specified in [9], with the most significant bit set to ‘0’.

RESERVED – Reserved bits.

The mobile station shall set this field to ‘00000’.

2.7.4.11 IMSI

This information record can be included in a *Status Message*, a *Status Response Message*, or an *Extended Status Response Message* to return the mobile station's operational IMSI.

Type-Specific Field	**Length (bits)**
IMSI_CLASS	1
IMSI_ADDR_NUM	3
MCC_O	10
IMSI_O_11_12	7
IMSI_O_S	34
RESERVED	1

IMSI_CLASS – If IMSI_O is a class 0 IMSI, the mobile station shall set this field to '0'; otherwise, the mobile station shall set this field to '1'.

IMSI_ADDR_NUM – Number of IMSI_O address digits.

If IMSI_O is a class 1 IMSI, the mobile station shall set this field to four less than the number of digits in the NMSI; otherwise, the mobile station shall set this field to '000'.

MCC_O – Mobile Country Code of the operational IMSI.

The mobile station shall set this field to MCC_O_S. (see 2.3.1).

IMSI_O_11_12 – The 11th and 12th digits of the operational IMSI.

The mobile station shall set this field to $IMSI\_O\_11\_12_S$. (see 2.3.1).

IMSI_O_S – Last ten digits of the operational IMSI.

The mobile station shall set this field to IMSI_O_S. (see 2.3.1.)

RESERVED – Reserved bit.

The mobile station shall set this field to '0'.

2.7.4.12 ESN

This information record can be included in a *Status Message*, a *Status Response Message*, or an *Extended Status Response Message* to return the mobile station ESN.

Type-Specific Field	**Length (bits)**
ESN	32

ESN – Mobile station electronic serial number.

If the mobile station has a R-UIM which indicates that UIM ID is to be used, the mobile station shall set this field to UIM ID (see [40]); otherwise, the mobile station shall set this field to its ESN_p (see 2.3.2).

2.7.4.13 Band Class Information

This information record can be included in a *Status Response Message*, or an *Extended Status Response Message* to return band class information about the mobile station.

Type-Specific Field	**Length (bits)**
BAND_CLASS_INFO	8 × RECORD_LEN

BAND_CLASS_INFO – Band class information.

This field indicates which band classes are supported by the mobile station.

The mobile station shall set the Nth most significant bit of this field to '1' if the Nth band class defined in [45] is supported by the mobile station; otherwise, the mobile station shall set the Nth most significant bit of this field to '0'. Example of this field coding is shown in Figure 2.7.4.13-1.

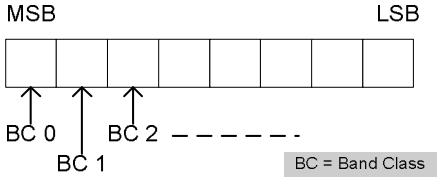

Figure 2.7.4.13-1. BAND_CLASS_INFO field coding

The mobile station shall add reserved bits as needed in order to make the length of the entire information record equal to an integer number of octets. The mobile station shall set these bits to '0'.

2.7.4.14 Power Class Information

This information record can be included in a *Status Response Message*, or an *Extended Status Response Message* to return power class information about the mobile station.

Type-Specific Field	Length (bits)
MAX_EIRP	8

MAX_EIRP – Maximum effective isotropic radiated power (EIRP).

The mobile station shall set this field to the minimum EIRP at maximum output (in dBW) for the mobile station plus 60 (see [11]). When the mobile station output power is expressed in ERP, it may be converted to EIRP by adding 2 dB to the ERP value.[7]

[7] For example, if a mobile station has a minimum ERP at maximum output of -4 dBW, then the mobile station sets this field to 58.

2.7.4.15 Operating Mode Information

This information record can be included in a *Status Response Message* or an *Extended Status Response Message* to return operating mode information about the mobile station.

Type-Specific Field	Length (bits)
OP_MODE_INFO	8 × RECORD_LEN

OP_MODE_INFO – Operating mode information.

This field indicates which operating modes are supported by the mobile station in the band class for which information is requested.

This field currently consists of the following subfields which are included in the information record in the order shown in Table 2.7.4.15-1 for $P\_REV\_IN\_USE_S$ less than or equal to three and in Table 2.7.4.15-2 for $P\_REV\_IN\_USE_S$ greater than three.

Table 2.7.4.15-1. OP_MODE for $P\_REV\_IN\_USE_S$ Less Than or Equal to Three

Subfield	Length (bits)	Subfield Description
OP_MODE0	1	CDMA mode in Band Class 1 and Band Class 4
OP_MODE1	1	CDMA mode in Band Class 0 and Band Class 3
OP_MODE2	1	Reserved (Previously: Analog mode)
OP_MODE3	1	Reserved (Previously: wide analog mode)
OP_MODE4	1	Reserved (Previously: narrow analog mode)
RESERVED	3	Reserved Bits

Table 2.7.4.15-2. OP_MODE for P_REV_IN_USE$_S$ Greater Than Three

Subfield	Length (bits)	Subfield Description	Standards
OP_MODE0	1	CDMA mode	
OP_MODE1	1	CDMA mode[8]	
OP_MODE2	1	Reserved (Previously: Analog mode)	
OP_MODE3	1	Reserved (Previously: Wide analog mode)	
OP_MODE4	1	Reserved (Previously: Narrow analog mode)	
OP_MODE5	1	DS-41	[32]
OP_MODE6	1	MC-MAP	[31]
RESERVED	1	–	–

The mobile station shall set each subfield to ‘1’, if the corresponding operating mode is supported by the mobile station; otherwise, the mobile station shall set the subfield to ‘0’.

RESERVED – Reserved bits.

The mobile station shall set each bit in this field to ‘0’.

When more operating modes are defined, the reserved bits will be used for the new corresponding subfields. Sufficient octets will also be added to this field to accommodate the corresponding new subfields. All the undefined bits in an additional octet will be reserved bits.

If all bits are set to ‘0’ in an octet and all succeeding octets, the mobile station shall omit the octet and the succeeding octets.

[8] The mobile station shall set OP_MODE1 the same as OP_MODE0.

2.7.4.16 Service Option Information

This information record can be included in a *Status Response Message*, or an *Extended Status Response Message* to return service option information about the mobile station.

Type-Specific Field	**Length (bits)**
One or more occurrences of the following field:	
{	
RESERVED	6
FORWARD_SUPPORT	1
REVERSE_SUPPORT	1
SERVICE_OPTION	16
}	

The mobile station shall include one occurrence of the following record for each service option supported:

RESERVED – Reserved bits.

The mobile station shall set this field to '000000'.

FORWARD_SUPPORT – Support indicator for Forward Traffic Channel.

The mobile station shall set this field to '1' if the service option specified in the SERVICE_OPTION field is supported on the Forward Traffic Channel.

REVERSE_SUPPORT – Support indicator for Reverse Traffic Channel.

The mobile station shall set this field to '1' if the service option specified in the SERVICE_OPTION field is supported on the Reverse Traffic Channel.

SERVICE_OPTION – Service option.

The mobile station shall set this field to the value specified in [30] for the service option supported.

2.7.4.17 Multiplex Option Information

This information record can be included in a *Status Response Message* or an *Extended Status Response Message* to return multiplex option information about the mobile station. The mobile station shall include at least one, and not more than six, instances of the record within the type-specific field according to the following rules:

- Within the type-specific field, the mobile station may include one instance of a record in which MULTIPLEX_OPTION is set to 1. If this instance is included, the mobile station shall support Multiplex Option 1 for forward and reverse operation.
- Within the type-specific field, the mobile station may include one instance of a record in which MULTIPLEX_OPTION is set to 2. If this instance is included, the mobile station shall support Multiplex Option 2 for forward and reverse operation.
- Within the type-specific field, the mobile station may include one instance of a record in which MULTIPLEX_OPTION is set to 3, 5, 7, 9, 11, 13, or 15 and with FOR_NUM_BITS set to '00000000'. If this instance is included, the mobile station shall set MULTIPLEX_OPTION to the highest numbered multiplex option from the set {3, 5, 7, 9, 11, 13, 15} which the mobile station supports for reverse operation, and the mobile station shall support all multiplex options less than or equal to MULTIPLEX_OPTION from that set for reverse operation.
- Within the type-specific field, the mobile station may include one instance of a record in which MULTIPLEX_OPTION is set to 4, 6, 8, 10, 12, 14, or 16 and with FOR_NUM_BITS set to '00000000'. If this instance is included, the mobile station shall set MULTIPLEX_OPTION to the highest numbered multiplex option from the set {4, 6, 8, 10, 12, 14, 16} which the mobile station supports for reverse operation, and the mobile station shall support all multiplex options less than or equal to MULTIPLEX_OPTION from that set for reverse operation.
- Within the type-specific field, the mobile station may include one instance of a record in which MULTIPLEX_OPTION is set to 3, 5, 7, 9, 11, 13, or 15 and with REV_NUM_BITS set to '00000000'. If this instance is included, the mobile station shall set MULTIPLEX_OPTION to the highest numbered multiplex option from the set {3, 5, 7, 9, 11, 13, 15} which the mobile station supports for forward operation, and the mobile station shall support all multiplex options less than or equal to MULTIPLEX_OPTION from that set for forward operation.
- Within the type-specific field, the mobile station may include one instance of a record in which MULTIPLEX_OPTION is set to 4, 6, 8, 10, 12, 14, or 16 and with REV_NUM_BITS set to '00000000'. If this instance is included, the mobile station shall set MULTIPLEX_OPTION to the highest numbered multiplex option from the set {4, 6, 8, 10, 12, 14, 16} which the mobile station supports for forward operation, and the mobile station shall support all multiplex options less than or equal to MULTIPLEX_OPTION from that set for forward operation.
- Within the type-specific field, the mobile station shall include at least one instance of a record in which FOR_NUM_BITS is set to a value other than '00000000'.

- Within the type-specific field, the mobile station shall include at least one instance of a record in which REV_RATES is set to a value other than '00000000'.

Type-Specific Field	**Length (bits)**
One or more occurrences of the following record:	
{	
MULTIPLEX_OPTION	16
FOR_NUM_BITS	8
REV_NUM_BITS	8
}	

The mobile station shall include one occurrence of the following record for each specified multiplex option according to the previously stated rules:

MULTIPLEX_OPTION – Supported multiplex option.

The mobile station shall set this field to the number of the supported multiplex option from the set {1, 2, 3, 4, 5, 6, 7, 8, 9, 10, 11, 12, 13, 14, 15, 16} (e.g., 1 corresponds to Multiplex Option 1).

FOR_NUM_BITS – Forward Traffic Channel number of bits per frame.

If FOR_NUM_BITS = '00000000', then the specified multiplex option in this record shall indicate the supported multiplex option for the Reverse Traffic Channel only. In this case, no further interpretation of the FOR_NUM_BITS field shall be made. The mobile station shall not set both FOR_NUM_BITS and REV_NUM_BITS equal to '00000000' in the same information record.

If MULTIPLEX_OPTION is equal to 1, 3, 5, 7, 9, 11, 13, or 15, this field consists of the subfields specified in Table 2.7.4.17-1 which are included in the information record in the order shown in the table. The subfields in Table 2.7.4.17-1 refer to the number of bits per frame supported on the Fundamental Channel of the Forward Traffic Channel.

Table 2.7.4.17-1. Forward Fundamental Traffic Channel Number of Bits per Frame for Forward Multiplex Option 1

Subfield	Length (bits)	Subfield Description
RS1_9600_FOR	1	172 bits per F-FCH frame
RS1_4800_FOR	1	80 bits per F-FCH
RS1_2400_FOR	1	40 bits per F-FCH frame
RS1_1200_FOR	1	16 bits per F-FCH frame
RESERVED	4	Reserved Bits

If MULTIPLEX_OPTION is equal to 2, 4, 6, 8, 10, 12, 14, or 16, this field consists of the subfields specified in Table 2.7.4.17-2 which are included in the information record in the order shown in the table. The subfields in Table 2.7.4.17-2 refer to the number of bits per frame supported on the Fundamental Channel of the Forward Traffic Channel.

Table 2.7.4.17-2. Forward Fundamental Traffic Channel Number of Bits per Frame for Forward Multiplex Option equal to 2

Subfield	Length (bits)	Subfield Description
RS2_14400_FOR	1	267 bits per F-FCH frame
RS2_7200_FOR	1	125 bits per F-FCH frame
RS2_3600_FOR	1	55 bits per F-FCH frame
RS2_1800_FOR	1	21 bits per F-FCH frame
RESERVED	4	Reserved Bits

The mobile station shall set the subfields specified in Tables 2.7.4.17-1 and 2.7.4.17-2, corresponding to the Forward Traffic Channel number of bits per frame supported by the mobile station for this multiplex option to ‘1’, and shall set the remaining subfields to ‘0’. The mobile station shall set RESERVED to ‘0000’.

REV_NUM_BITS – Reverse Traffic Channel transmission rates.

If REV_NUM_BITS is equal to ‘00000000’, then the specified multiplex option in this record indicate the supported multiplex option for the Forward Traffic Channel only. In this case, no further interpretation of the REV_NUM_BITS field shall be made. The mobile station shall not set both FOR_NUM_BITS and REV_NUM_BITS equal to ‘00000000’ in the same information record.

If MULTIPLEX_OPTION is equal to 1, 3, 5, 7, 9, 11, 13, or 15, this field consists of the subfields specified in Table 2.7.4.17-3 which are included in the information record in the order shown in the table. The subfields in Table 2.7.4.17-3 refer to the number of bits per frame supported on the Fundamental Channel of the Reverse Traffic Channel.

Table 2.7.4.17-3. Reverse Fundamental Traffic Channel Number of Bits per Frame for Reverse Multiplex Option equal to 1

Subfield	Length (bits)	Subfield Description
RS1_9600_REV	1	172 bits per R-FCH frame
RS1_4800_REV	1	80 bits per R-FCH frame
RS1_2400_REV	1	40 bits per R-FCH frame
RS1_1200_REV	1	16 bits per R-FCH frame
RESERVED	4	Reserved Bits

If MULTIPLEX_OPTION is equal to 2, 4, 6, 8, 10, 12, 14, or 16, this field consists of the subfields specified in Table 2.7.4.17-4 which are included in the information record in the order shown in the table. The subfields in Table 2.7.4.17-4 refer to the number of bits per frame supported on the Fundamental Channel of the Reverse Traffic Channel.

Table 2.7.4.17-4. Reverse Fundamental Traffic Channel Number of Bits per Frame for Reverse Multiplex Option equal to 2

Subfield	Length (bits)	Subfield Description
RS2_14400_REV	1	267 bits per R-FCH frame
RS2_7200_REV	1	125 bits per R-FCH frame
RS2_3600_REV	1	55 bits per R-FCH frame
RS2_1800_REV	1	21 bits per R-FCH frame
RESERVED	4	Reserved Bits

The mobile station shall set the subfields specified in Table 2.7.4.17-3 and Table 2.7.4.17-4 corresponding to the Reverse Traffic Channel transmission number of bits per frame supported by the mobile station for this multiplex option to ‘1’, and shall set the remaining subfields to ‘0’. The mobile station shall set RESERVED to ‘0000’.

2.7.4.18 Service Configuration

The format of the Service Configuration information record is defined in 3.7.5.7.

2.7.4.19 Called Party Subaddress

This information record identifies the called party subaddress.

Type-Specific Field	Length (bits)
EXTENSION_BIT	1
SUBADDRESS_TYPE	3
ODD/EVEN_INDICATOR	1
RESERVED	3

Zero or more occurrences of the following field:

{

CHARi	8

}

EXTENSION_BIT – The extension bit.

The mobile station shall set this field to '1'.

SUBADDRESS_TYPE – Type of subaddress.

The mobile station shall set this field to the SUBADDRESS_TYPE value shown in Table 2.7.4.19-1 corresponding to the type of the subaddress, as defined in [7], Section 4.5.8.

Table 2.7.4.19-1. Subaddress Types

Description	SUBADDRESS TYPE (binary)
NSAP (see [34])	000
User specified	010
Reserved	others

ODD/EVEN_INDICATOR – The indicator of odd/even bits.

The mobile station shall set this field to the ODD/EVEN_INDICATOR value shown in Table 2.7.4.19-2 corresponding to the indicator of even/odd bits, as defined in [7], Section 4.5.8. This field is only used when the type of subaddress is "User specified" and the coding is BCD.

Table 2.7.4.19-2. Odd/Even Indicator

Description	ODD/EVEN INDICATOR (binary)
Even number of address signals	0
Odd number of address signals	1

RESERVED – Reserved bits.

The mobile station shall set this field to ‘000’.

CHARi – Character.

The mobile station shall include one occurrence of this field for each character in the called party subaddress.

When the SUBADDRESS_TYPE field is equal to ‘000’, the NSAP address shall be encoded using the preferred binary encoding specified in [35].

When the SUBADDRESS_TYPE field is set to ‘010’, the user-specified subaddress field is encoded according to the user specification, subject to a maximum length of 20 octets. When interworking with CCITT Recommendation X.25 networks, BCD coding should be applied.

2.7.4.20 Calling Party Subaddress

This information record identifies the calling party subaddress.

Type-Specific Field	Length (bits)
EXTENSION_BIT	1
SUBADDRESS_TYPE	3
ODD/EVEN_INDICATOR	1
RESERVED	3

Zero or more occurrences of the following field:

{

CHARi	8

}

EXTENSION_BIT – The extension bit.

The mobile station shall set this field to ‘1’.

SUBADDRESS_TYPE – Type of subaddress.

The mobile station shall set this field to the SUBADDRESS_TYPE value shown in Table 2.7.4.19-1 corresponding to the type of the subaddress, as defined in [7], Section 4.5.10.

ODD/EVEN_INDICATOR – The indicator of odd/even bits.

The mobile station shall set this field to the ODD/EVEN_INDICATOR value shown in Table 2.7.4.19-2 corresponding to the indicator of even/odd bits, as defined in [7], Section 4.5.10. It is only used when the type of subaddress is “User specified” and the coding is BCD.

RESERVED – Reserved bits.

The mobile station shall set this field to ‘000’.

CHARi – Character.

The mobile station shall include one occurrence of this field for each character in the calling party subaddress.

When the SUBADDRESS_TYPE field is equal to ‘000’, the NSAP address shall be encoded using the preferred binary encoding specified in [35].

When the SUBADDRESS_TYPE field is set to ‘010’, user-specified subaddress field is encoded according to the user specification, subject to a maximum length of 20 octets. When interworking with [36] networks, BCD coding should be applied.

2.7.4.21 Connected Subaddress

This information record identifies the subaddress of the responding party.

Type-Specific Field	Length (bits)
EXTENSION_BIT	1
SUBADDRESS_TYPE	3
ODD/EVEN_INDICATOR	1
RESERVED	3

Zero or more occurrences of the following field:

{

CHARi	8

}

EXTENSION_BIT – The extension bit.

The mobile station shall set this field to '1'.

SUBADDRESS_TYPE – Type of subaddress.

The mobile station shall set this field to the SUBADDRESS_TYPE value shown in Table 2.7.4.19-1 corresponding to the type of the subaddress, as defined in [7], Section 4.5.14.

ODD/EVEN_INDICATOR – The indicator of odd/even bits.

The mobile station shall set this field to the ODD/EVEN_INDICATOR value shown in Table 2.7.4.19-2 corresponding to the indicator of even/odd bits, as defined in [7], Section 4.5.14. It is only used when the type of subaddress is "User specified" and the coding is BCD.

RESERVED – Reserved bits.

The mobile station shall set this field to '000'.

CHARi – Character.

The mobile station shall include one occurrence of this field for each character in the connected subaddress.

When the SUBADDRESS_TYPE field is equal to '000', the NSAP address shall be encoded using the preferred binary encoding specified in [35].

When the SUBADDRESS_TYPE field is set to '010', user-specified subaddress field is encoded according to the user specification, subject to a maximum length of 20 octets. When interworking with [36] networks, BCD coding should be applied.

2.7.4.22 Power Control Information

This information record can be included in a *Status Response Message*, or an *Extended Status Response Message* to return the minimum power control step size supported by the mobile station (see 2.1.2.3.2).

Type-Specific Field	**Length (bits)**
MIN_PWR_CNTL_STEP	3
RESERVED	5

MIN_PWR_CNTL_STEP – Minimum power control step size

The mobile station shall set this field to the PWR_CNTL_STEP value associated with the minimum closed loop power control step size shown in Table 3.7.3.3.2.25-1 that the mobile station supports.

RESERVED – Reserved bits.

The mobile station shall set this field to '00000'.

2.7.4.23 IMSI_M

This information record can be included in a *Status Response Message*, or an *Extended Status Response Message* to return the mobile station's $IMSI\_M_p$.

Type-Specific Field	**Length (bits)**
IMSI_M_CLASS	1
IMSI_M_ADDR_NUM	3
MCC_M	10
IMSI_M_11_12	7
IMSI_M_S	34
RESERVED	1

IMSI_M_CLASS – IMSI_M Class assignment of the mobile station.

The mobile station shall set this field to '0'.

IMSI_M_ADDR_NUM – Number of $IMSI\_M_p$ address digits.

The mobile station shall set this field to '000'.

MCC_M – Mobile Country Code of the MIN based IMSI.

The mobile station shall set this field the MCC_M_p. See 2.3.1.

IMSI_M_11_12 – The 11th and 12th digits of IMSI_M.

The mobile station shall set this field to $IMSI\_M\_11\_12_p$. See 2.3.1.

IMSI_M_S – Last ten digits of the IMSI_M.

The mobile station shall set this field to $IMSI\_M\_S_p$. See 2.3.1.

RESERVED – Reserved bit.

The mobile station shall set this field to '0'.

2.7.4.24 IMSI_T

This information record can be included in a *Status Response Message*, or an *Extended Status Response Message* to return the mobile station's IMSI_T.

Type-Specific Field	**Length (bits)**
IMSI_T_CLASS	1
IMSI_T_ADDR_NUM	3
MCC_T	10
IMSI_T_11_12	7
IMSI_T_S	34
RESERVED	1

IMSI_T_CLASS – IMSI_T Class assignment of the mobile station.

If the mobile station's IMSI_T is a class 0 IMSI, the mobile station shall set this field to '0'; otherwise, the mobile station shall set this field to '1'.

IMSI_T_ADDR_NUM – Number of $IMSI\_T_p$ address digits.

If the mobile station's IMSI_T is a class 1 IMSI, the mobile station shall set this field to four less than the number of digits in the NMSI; otherwise, the mobile station shall set this field to '000'.

MCC_T – Mobile Country Code of the IMSI_T.

The mobile station shall set this field to the MCC_T_p. See 2.3.1.

IMSI_T_11_12 – The 11th and 12th digits of the $IMSI\_T_p$.

The mobile station shall set this field to $IMSI\_T\_11\_12_p$. See 2.3.1.

IMSI_T_S – Last ten digits of the $IMSI\_T_p$.

The mobile station shall set this field to $IMSI\_T\_S_p$. See 2.3.1.

RESERVED – Reserved bit.

The mobile station shall set this field to '0'.

2.7.4.25 Capability Information

This information record identifies whether the following optional or MOB_P_REV dependent features are supported by the mobile station.

Type-Specific Field	Length (bits)
ACCESS_ENTRY_HO	1
ACCESS_PROBE_HO	1
ANALOG_SEARCH	1
HOPPING_BEACON	1
MAHHO	1
PUF	1
ANALOG_553A	1
QPCH	1
SLOTTED_TIMER	1
CHM_SUPPORTED	1
GATING_RATE_SET	0 or 2
EXT_CAP_INCLUDED	1
MABO	0 or 1
SDB	0 or 1
RLP_INFO_LEN	3
RLP_BLOB	8 × RLP_INFO_LEN
FLEX_SUPPORTED	1
F_FCH_FLEX_SUPPORTED	0 or 1
R_FCH_FLEX_SUPPORTED	0 or 1

(continues on next page)

Type-Specific Field	Length (bits)
F_DCCH_FLEX_SUPPORTED	0 or 1
R_DCCH_FLEX_SUPPORTED	0 or 1
F_SCH_FLEX_SUPPORTED	0 or 1
R_SCH_FLEX_SUPPORTED	0 or 1
VAR_SUPPORTED	1
F_SCH_VAR_SUPPORTED	0 or 1
R_SCH_VAR_SUPPORTED	0 or 1
MAX_SUM_NUM_BITS_C	0 or 16
MAX_SUM_NUM_BITS_T	0 or 16
CS_SUPPORTED	1
F_SCH_LTU_TAB_SUPPORTED	1
R_SCH_LTU_TAB_SUPPORTED	1
ERAM_SUPPORTED	0 or 1
PDCH_CHM_SUPPORTED	1
REV_FCH_GATING_SUPPORTED	1
RER_MODE_SUPPORTED	1
ADD_NUM_SYNC_ID_INCL	1
ADD_NUM_SYNC_ID	0 or 4
RSC_MODE_SUPPORTED	1
TKZ_MODE_SUPPORTED	1
F_SCH_EARLY_TERM_SUPPORTED	1
POWER_CONTROL_MODE_01_SUPPORTED	1
RESERVED	0 - 7 (as needed)

ACCESS_ENTRY_HO – Access Entry Handoff Support.

This field identifies the mobile station's support for access entry handoff (see 2.6.2.3). The mobile station shall set this field to '1' if access entry handoff is supported; otherwise, the mobile station shall set this field to '0'.

ACCESS_PROBE_HO – Access Probe Handoff Support.

This field identifies the mobile station's support for access probe handoff (see 2.6.3.1.3.3). The mobile station shall set this field to '1' if access probe handoff is supported; otherwise, the mobile station shall set this field to '0'.

ANALOG_SEARCH – Analog Search Support.

This field identifies the mobile station's support for analog searching (see 2.6.6.2.10). The mobile station shall set this field to '1' if analog searching is supported; otherwise, the mobile station shall set this field to '0'. The mobile station shall set this field to '0'.

HOPPING_BEACON – Hopping Beacon Support.

This field identifies the mobile station's support for hopping pilot beacons. The mobile station shall set this field to '1' if hopping pilot beacons are supported; otherwise, this field shall be set to '0'.

MAHHO – Mobile Assisted Hard Handoff Support.

This field identifies the mobile station's support for mobile assisted hard handoff. The mobile station shall set this field to '1'.

PUF – Location Power Up Function Support.

This field identifies the mobile station's support for location power up function (see 2.6.4.1.7).

If $MOB\_P\_REV_p$ is equal to '00000101', the mobile station shall set this field to '1'; otherwise the mobile station shall set this field as follows:

If the mobile station supports location power up function, the mobile station shall set this field to '1', otherwise, the mobile station shall set this field to '0'.

ANALOG_553A – Analog Support.

This field identifies the mobile station's compatibility with [12]. The mobile station shall set this field to '0'.

QPCH – Quick Paging Channel Support.

This field identifies the mobile station's support for the Quick Paging Channel. The mobile station shall set this field to '1' if the Quick Paging Channel is supported; otherwise, the mobile station shall set this field to '0'.

SLOTTED_TIMER – Slotted Timer Support.

This field identifies the mobile station's support for the Slotted Timer. The mobile station shall set this field to '1' if the Slotted Timer is supported; otherwise, the mobile station shall set this field to '0'.

CHM_SUPPORTED – Control Hold Mode supported indicator.

The mobile station shall set this field to '1' to indicate that the mobile station supports the Control Hold Mode; otherwise, the mobile station shall set this field to '0'.

GATING_RATE_SET – Set of supported Reverse Pilot gating rates.

If CHS_SUPPORTED is included and is set to '1', the mobile station shall set this field to value shown in Table 2.7.4.25-1 corresponding to the set of supported reverse pilot gating rates; otherwise the mobile station shall omit this field.

Table 2.7.4.25-1. Set of Supported Reverse Pilot Gating Rates

GATING_RATE SET field (binary)	Gating Rates Capability
00	Gating rates 1
01	Gating rates 1 and ½
10	Gating rates 1, ½ and ¼
11	Reserved

EXT_CAP_INCLUDED – Extended Capabilities Included indicator.

The mobile station shall set this field to '1' to indicate that extended capability indicators are included in this record; otherwise, the mobile station shall set this field to '0'.

MABO – Mobile Assisted Burst Operation capability indicator.

If EXT_CAP_INCLUDED is set to '0', the mobile station shall omit this field; otherwise, the mobile station shall include this field and set it as follows:

The mobile station shall set this field to '1' if it supports the Mobile Assisted Burst Operation capability; otherwise, the mobile station shall set this field to '0'.

SDB – Short Data Burst supported indicator.

If EXT_CAP_INCLUDED is set to '0', the mobile station shall omit this field; otherwise, the mobile station shall include this field and set it as follows:

If $MOB\_P\_REV_p$ is greater or equal to 11 and if the mobile station supports packet data service as specified in [42], the mobile station shall set this field to '1'[9].

[9] Short Data Burst Capability support is mandatory for the mobile station with $MOB\_P\_REV_p$ greater than or equal to 11 that supports packet data service as specified in [42]

Otherwise, the mobile station shall set this field to '1' if it supports Short Data Burst capability; otherwise, the mobile station shall set this field to '0'.

RLP_INFO_LEN - RLP capability information length.

The mobile station shall set this field to '000' if the RLP_BLOB field is not included in this record; otherwise, it shall set this field to the size of the RLP_BLOB field in integer number of octets.

RLP_BLOB - Radio Link Protocol information block of bits.

If the RLP_INFO_LEN field is set to '000', the mobile station shall omit this field; otherwise, the mobile station shall set this field as follows:

If $P\_REV\_IN\_USE_S$ is equal or greater than seven[10], the mobile station shall set this field to the Radio Link Protocol information block of bits (see [42]).

If $P\_REV\_IN\_USE_S$ equals six, the mobile station shall set this field to the Radio Link Protocol capability information block of bits, as shown in Table 2.7.4.25-2.

Table 2.7.4.25-2. RLP Capability Information Block

Subfields	Length
MAX_MS_NAK_ROUNDS_FWD	3
MAX_MS_NAK_ROUNDS_REV	3
RESERVED	2

MAX_MS_NAK_ROUNDS_FWD - Maximum number of RLP NAK rounds supported by the mobile station on the forward traffic channel.

The mobile station shall set this field to the maximum number of NAK round(s) it supports on the forward traffic channel (BS RLP transmitting function) (see [42]).

MAX_MS_NAK_ROUNDS_REV - Maximum number of RLP NAK rounds supported by the mobile station on the reverse traffic channel.

The mobile station shall include this field and set it to the maximum number of NAK round(s) it supports on the reverse traffic channel (MS RLP transmitting function) (see [42]).

FLEX_SUPPORTED – Flexible rate feature supported indicator.

[10] $P\_REV\_IN\_USE_S$ >= 7 can not work with TIA/EIA/IS-707-A

The mobile station shall set this field to '1' if it supports the flexible rate feature (the capability to support a non-listed frame format) on any of the forward or reverse Fundamental, Supplemental or Dedicated Control channels; otherwise, the mobile station shall set this field to '0'.

F_FCH_FLEX_SUPPORTED – Forward Fundamental channel flexible rate feature supported indicator.

The mobile station shall include this field only if FLEX_SUPPORTED is equal to '1'. If this field is included, the mobile station shall set this field to '1' if it supports the flexible rate feature for the Forward Fundamental Channel; otherwise, the mobile station shall set this field to '0'.

R_FCH_FLEX_SUPPORTED – Reverse Fundamental channel flexible rate feature supported indicator.

The mobile station shall include this field only if FLEX_SUPPORTED is equal to '1'. If this field is included, the mobile station shall set this field to '1' if it supports the flexible rate feature for the Reverse Fundamental Channel; otherwise, the mobile station shall set this field to '0'.

F_DCCH_FLEX_SUPPORTED – Forward Dedicated Control channel flexible rate feature supported indicator.

The mobile station shall include this field only if FLEX_SUPPORTED is equal to '1'. If this field is included, the mobile station shall set this field to '1' if it supports the flexible rate feature for the Forward Dedicated Control Channel; otherwise, the mobile station shall set this field to '0'.

R_DCCH_FLEX_SUPPORTED – Reverse Dedicated Control channel flexible rate feature supported indicator.

The mobile station shall include this field only if FLEX_SUPPORTED is equal to '1'. If this field is included, the mobile station shall set this field to '1' if it supports the flexible rate feature for the Reverse Dedicated Control Channel; otherwise, the mobile station shall set this field to '0'.

F_SCH_FLEX_SUPPORTED – Forward Supplemental channel flexible rate feature supported indicator.

The mobile station shall include this field only if FLEX_SUPPORTED is equal to '1'. If this field is included, the mobile station shall set this field to '1' if it supports the flexible rate feature for the Forward Supplemental Channel; otherwise, the mobile station shall set this field to '0'.

R_SCH_FLEX_SUPPORTED – Reverse Supplemental channel flexible rate feature supported indicator.

The mobile station shall include this field only if FLEX_SUPPORTED is equal to ‘1’. If this field is included, the mobile station shall set this field to ‘1’ if it supports the flexible rate feature for the Reverse Supplemental Channel; otherwise, the mobile station shall set this field to ‘0’.

VAR_SUPPORTED – Variable rate feature supported indicator.

The mobile station shall set this field to ‘1’ if it supports the variable rate feature (the capability to support rate determination) on any of the forward or reverse Supplemental channels; otherwise, the mobile station shall set this field to ‘0’.

F_SCH_VAR_SUPPORTED – Forward Supplemental Channel Variable Rate supported indicator.

The mobile station shall include this field only if VAR_SUPPORTED is equal to ‘1’. If this field is included, the mobile station shall set this field to ‘1’ if it supports the variable rate feature on the Forward Supplemental Channels.

R_SCH_VAR_SUPPORTED – Reverse Supplemental Channel Variable Rate supported indicator.

The mobile station shall include this field only if VAR_SUPPORTED is equal to ‘1’. If this field is included, the mobile station shall set this field to ‘1’ if it supports the variable rate feature on the Reverse Supplemental Channels.

MAX_SUM_NUM_BITS_C – Maximum sum of number of bits corresponding to Convolutional rates in the variable rate set.

The mobile station shall include this field only if F_SCH_VAR_SUPPORTED is equal to ‘1’. If this field is included, the mobile station shall set this field to the maximum of the sum of possible information bits per 20 ms corresponding to the Convolutional Code rates in the Variable Rate Set for a Forward Supplemental Channel below which the mobile station is capable of performing rate determination on the forward supplemental channel when Convolutional coding is used.

MAX_SUM_NUM_BITS_T – Maximum sum of number of bits corresponding to Turbo Code rates in the variable rate set

The mobile station shall include this field only if F_SCH_VAR_SUPPORTED is equal to ‘1’. If this field is included, the mobile station shall set this field to the maximum of the sum of possible information bits per 20 ms corresponding to the Turbo Code rates in the Variable Rate Set for a Forward Supplemental Channel below which the mobile station is capable of performing rate determination on the forward supplemental channel when Turbo coding is used.

CS_SUPPORTED – Concurrent Services supported indicator.

If the mobile station supports concurrent services, the mobile station shall set this field to '1'; otherwise, the mobile station shall set this field to '0'.

F_SCH_LTU_TAB_SUPPORTED – Forward Supplemental Channel Downloadable LTU tables supported indicator.

If the mobile station supports downloadable LTU Tables for Forward Supplemental Channel, the mobile station shall set this field to '1'; otherwise, the mobile station shall set this field to '0'.

R_SCH_LTU_TAB_SUPPORTED – Reverse Supplemental Channel Downloadable LTU tables supported indicator.

If the mobile station supports downloadable LTU Tables for Reverse Supplemental Channel, the mobile station shall set this field to '1'; otherwise, the mobile station shall set this field to '0'.

ERAM_SUPPORTED – Enhanced Rate Adaptation Mode supported indicator.

If FLEX_SUPPORTED or VAR_SUPPORTED is set to '1', the mobile station shall include this field; otherwise, the mobile station shall omit this field. If included, the mobile station shall set this field to '1' if the mobile station supports the Enhanced Rate Adaptation Mode; otherwise, the mobile station shall set this field to '0'.

PDCH_CHM_SUPPORTED – PDCH Control Hold Mode supported indicator.

The mobile station shall set this field to '1' to indicate that the mobile station supports the PDCH Control Hold Mode; otherwise, the mobile station shall set this field to '0'.

REV_FCH_GATING_SUPPORTED – Reverse Fundamental eighth gating mode supported indicator.

If the Reverse Fundamental Traffic Channel gating mode is supported, the mobile station shall set this field to '1'; otherwise, the mobile station shall set this field to '0'.

RER_MODE_SUPPORTED – Radio environment reporting mode supported indicator.

The mobile station shall set this field to '1' if it supports radio environment reporting mode; otherwise, the mobile station shall set this field to '0'.

ADD_NUM_SYNC_ID_INCL – Additional number of synchronization identifiers included indicator.

If this record is to contain the ADD_NUM_SYNC_ID field, the mobile station shall set this field to '1'; otherwise, the mobile station shall set this field to '0'.

ADD_NUM_SYNC_ID – Additional number of synchronization identifiers.

If ADD_NUM_SYNC_ID_INCL field is set to ‘1’, the mobile station shall include this field and set it to the number of SYNC_ID’s supported minus 5; otherwise it shall omit this field.

RSC_MODE_SUPPORTED – Reduced Slot Cycle Mode supported indicator.

The mobile station shall set this field to ‘1’ if it supports the reduced slot cycle mode; otherwise, the mobile station shall set this field to ‘0’.

TKZ_MODE_SUPPORTED – Tracking zone mode supported indicator.

The mobile station shall set this field to ‘1’ if it supports tracking zone mode; otherwise, the mobile station shall set this field to ‘0’.

F_SCH_EARLY_TERM_SUPPORTED – Forward Supplemental Channel early termination supported indicator.

The mobile station shall set this field to ‘1’ if the mobile station supports early termination for Forward Supplemental Channel; otherwise, the mobile station shall set this field to ‘0’.

POWER_CONTROL_MODE_01_SUPPORTED – Power Control Mode 01 supported indicator.

The mobile station shall set this field to ‘1’ if the mobile station supports power control mode ‘01’ for RC11 and RC12; otherwise, the mobile station shall set this field to ‘0’.

RESERVED – Reserved bits.

The mobile station shall add reserved bits as needed in order to make the length of the entire information record equal to an integer number of octets. The mobile station shall set these bits to ‘0’.

2.7.4.26 Extended Record Type - International

The use of this record type is country-specific. The first ten bits of the type-specific fields shall include the Mobile Country Code (MCC) associated with the national standards organization administering the use of the record type. Encoding of the MCC shall be as specified in 2.3.1.3. The remaining six bits of the first two octets of the type-specific fields shall be used to specify the country-specific record type.

2.7.4.27 Channel Configuration Capability Information

This information record can be included in a *Status Response Message* or an *Extended Status Response Message* to return channel configuration capability information about the mobile station.

Type-Specific Field	**Length (bits)**
OTD_SUPPORTED	1
FCH_SUPPORTED	1
FCH Type-specific fields	0 or Variable
DCCH_SUPPORTED	1
DCCH Type-specific fields	0 or Variable
FOR_SCH_SUPPORTED	1
FOR_SCH Type-specific fields	0 or Variable
REV_SCH_SUPPORTED	1
REV_SCH Type-specific fields	0 or Variable
RESERVED_1	0 or 2
STS_SUPPORTED	1
3X_CCH_SUPPORTED	1
CCSH_SUPPORTED	0 or 1
FOR_PDCH_SUPPORTED	1
FOR_PDCH Capability Type-specific fields	0 or variable
FOR_PDCH_SCH_SUPPORTED	0 or 1
REV_PDCH_SUPPORTED	0 or 1
REV_PDCH Capability Type-specific fields	0 or variable
FUNDICATED_BCMC_SUPPORTED	1
FUNDICATED_BCMC Type-specific fields	0 or variable
SCH_BCMC_SUPPORTED	1
RESERVED	0 - 7 (as needed)

OTD_SUPPORTED – OTD supported indicator.

The mobile station shall set this field to ‘1’ if the mobile station supports orthogonal transmission diversity; otherwise, the mobile station shall set this field to ‘0’.

FCH_SUPPORTED – Fundamental Channel supported indicator.

The mobile station shall set this field to ‘1’, if the mobile station supports the Fundamental Channel; otherwise, the mobile station shall set this field to ‘0’.

FCH Type-specific fields – Fundamental Channel configuration capability information.

If the FCH_SUPPORTED field is set to ‘1’, the mobile station shall include this field and set it as described in 2.7.4.27.1; otherwise the mobile station shall omit this field.

DCCH_SUPPORTED – Dedicated Control Channel supported indicator.

The mobile station shall set this field to ‘1’ if the mobile station supports the Dedicated Control Channel; otherwise, the mobile station shall set this field to ‘0’.

DCCH Type specific fields – Fundamental Channel configuration capability information.

If the DCCH_SUPPORTED field is set to ‘1’, the mobile station shall include this field and set it as described in 2.7.4.27.2; otherwise the mobile station shall omit this field.

FOR_SCH_SUPPORTED – Forward Supplemental Channel supported indicator.

The mobile station shall set this field to ‘1’ if the mobile station supports the Forward Supplemental Channel; otherwise, the mobile station shall set this field to ‘0’.

FOR_SCH Type-specific fields – Forward Supplemental Channel Configuration Capability Information.

If the FOR_SCH_SUPPORTED field is set to ‘1’, the mobile station shall include this field and set it as described in 2.7.4.27.3; otherwise the mobile station shall omit this field.

REV_SCH_SUPPORTED – Reverse Supplemental Channel supported indicator.

The mobile station shall set this field to ‘1’ if the mobile station supports the Reverse Supplemental Channel; otherwise, the mobile station shall set this field to ‘0’.

REV_SCH Type-specific fields – Reverse Supplemental Channel Configuration capability information.

If the REV_SCH_SUPPORTED field is set to ‘1’, the mobile station shall include this field and set it as described in 2.7.4.27.4; otherwise the mobile station shall omit this field.

RESERVED_1 – Reserved bits.

If both the FOR_SCH_SUPPORTED and REV_SCH_SUPPORTED fields are set to ‘0’, the mobile station shall omit this field. Otherwise, the mobile station shall include this field and set this field to '00'.

STS_SUPPORTED – STS supported indicator.

The mobile station shall set this field to '1' if the mobile station supports Space Time Spreading Transmit Diversity; otherwise, the mobile station shall set this field to '0'.

3X_CCH_SUPPORTED – 3X Common Channel supported.

The mobile station shall set this field to '1' if the mobile station supports the Spreading Rate 3 common channels (3X BCCH, 3X F-CCCH, and 3X R-EACH); otherwise, the mobile station shall set this field to '0'.

CCSH_SUPPORTED – CCSH supported indicator.

If the FOR_SCH_SUPPORTED field is set to '0', the mobile station shall omit this field; otherwise the mobile station shall include this field and set it as follows.

If the mobile station supports Code Combining Soft Handoff, the mobile station shall set this field to '1'; otherwise, the mobile station shall set this field to '0'.

FOR_PDCH_SUPPORTED – Forward Packet Data Channel supported indicator.

If the mobile station supports the Forward Packet Data Channel, then the mobile station shall set this field to '1'; otherwise, the mobile station shall set this field to '0'.

FOR_PDCH Capability

Type-specific fields – Forward Packet Data Channel capability information.

If the FOR_PDCH_SUPPORTED field is set to '1', the mobile station shall include this field and set it as described in 2.7.4.27.5; otherwise the mobile station shall omit this field.

FOR_PDCH_SCH_SUPPORTED – Simultaneous support of F-PDCH and F-SCH indicator.

If FOR_PDCH_SUPPORTED is set to '0', or FOR_SCH_SUPPORTED is set to '0', the mobile station shall omit this field; otherwise, the mobile station shall include this field and set it as follows:

The mobile station shall set this field to '1' if it supports the simultaneous assignment of F-PDCH and F-SCH; otherwise, the mobile station shall set this field to '0'.

REV_PDCH_SUPPORTED - Reverse Packet Data Channel supported indicator.

If FOR_PDCH_SUPPORTED is set to '0', the mobile station shall omit this field; otherwise, the mobile station shall include this field and set it as follows.

If the mobile station supports the Reverse Packet Data Channel (R-PDCH), the mobile station shall set this field to '1'; otherwise, the mobile station shall set this field to '0'.

REV_PDCH Capability

Type-specific fields – Forward Packet Data Channel capability information.

If the REV_PDCH_SUPPORTED field included and is set to '1', the mobile station shall include this field and set it as described in 2.7.4.27.6; otherwise the mobile station shall omit this field.

FUNDICATED_BCMC_SUPPORTED – Fundicated Channel BCMC supported indicator.

The mobile station shall set this field to '1' to indicate that the mobile station supports the BCMC reception on shared Forward Fundicated Channels in *Mobile Station Control on the Traffic Channel State*; otherwise, the mobile station shall set this field to '0'.

FUNDICATED_BCMC Type-specific fields – Fundicated Channel BCMC capability information.

If the FUNDICATED_BCMC_SUPPORTED field is set to '0', the mobile station shall omit this field; otherwise, the mobile station shall include this field and set it as described in 2.7.4.27.7.

SCH_BCMC_SUPPORTED – Supplemental Channel BCMC supported indicator.

The mobile station shall set this field to '1' to indicate that the mobile station supports the BCMC reception on shared Forward Supplemental Channels in *Mobile Station Control on the Traffic Channel State*; otherwise, the mobile station shall set this field to '0'.

RESERVED – Reserved bits.

The mobile station shall add reserved bits as needed in order to make the length of the entire information record equal to an integer number of octets. The mobile station shall set these bits to '0'.

2.7.4.27.1 FCH Type-specific Fields

The Fundamental Channel configuration capability information included in the FCH Type-specific fields contains the following subfields:

FCH_FRAME_SIZE	1
FOR_FCH_LEN	3
FOR_FCH_RC_MAP	3 × FOR_FCH_LEN
REV_FCH_LEN	3
REV_FCH_RC_MAP	3 × REV_FCH_LEN

FCH_FRAME_SIZE – Fundamental Channel Frame Size capability indicator.

If in addition to the 20 ms frame size the mobile station also supports the 5 ms frame size on the Fundamental Channel, the mobile station shall set this field to ‘1’; otherwise, the mobile station shall set this field to ‘0’.

FOR_FCH_LEN – Forward Fundamental Channel Configuration information length.

The mobile station shall set this field to the number of 3 bit units required to specify the length, in bits, of the FOR_FCH_RC_MAP field.

FOR_FCH_RC_MAP – Forward Fundamental Radio Configuration information.

The mobile station shall set this field as described below to indicate which Radio Configurations (see [2] Table 3.1.3.1-1) are supported by the mobile station on the Forward Fundamental Channel.

This field consists of the sequence of 1-bit indicators, each indicating the mobile station support for specific Radio Configuration. Bit positions of these indicators in the field and corresponding Radio Configurations are specified in Table 2.7.4.27.1-1.

The mobile station shall set each indicator to ‘1’ if the corresponding Radio Configuration on the Forward Fundamental Channel is supported by the mobile station; otherwise, the mobile station shall set the indicator to ‘0’. The mobile station shall set any unused bits in the field to ‘0’.

Table 2.7.4.27.1-1. Forward Channel Radio Configurations Supported

Subfield	Length (bits)	Subfield Description
RC1	1	Radio Configuration 1
RC2	1	Radio Configuration 2
RC3	1	Radio Configuration 3
RC4	1	Radio Configuration 4
RC5	1	Radio Configuration 5
RC6	1	Radio Configuration 6
RC7	1	Radio Configuration 7
RC8	1	Radio Configuration 8
RC9	1	Radio Configuration 9
RC11	1	Radio Configuration 11
RC12	1	Radio Configuration 12

REV_FCH_LEN – Reverse Fundamental Channel Configuration information length.

The mobile station shall this field to the number of 3 bit units required to specify the length, in bits, of the REV_FCH_RC_MAP field.

REV_FCH_RC_MAP – Reverse Fundamental Radio Configuration information.

The mobile station shall set this field as described below to indicate which Radio Configurations (see [2] Table 2.1.3.1-1) are supported by the mobile station on the Reverse Fundamental Channel.

This field consists of the sequence of 1-bit indicators, each indicating the mobile station support for specific Radio Configuration. Bit positions of these indicators in the field and corresponding Radio Configurations are specified in Table 2.7.4.27.1-2.

The mobile station shall set each indicator to ‘1’ if the corresponding Radio Configuration on the Reverse Fundamental Channel is supported by the mobile station; otherwise, the mobile station shall set the indicator to ‘0’. The mobile station shall set any unused bits in the field to ‘0’.

Table 2.7.4.27.1-2. Reverse Channel Radio Configurations Supported

Subfield	Length (bits)	Subfield Description
RC1	1	Radio Configuration 1
RC2	1	Radio Configuration 2
RC3	1	Radio Configuration 3
RC4	1	Radio Configuration 4
RC5	1	Radio Configuration 5
RC6	1	Radio Configuration 6
RC8	1	Radio Configuration 8

2.7.4.27.2 DCCH Type-Specific Fields

The Dedicated Control Channel configuration capability information included in the DCCH Type-specific fields contains the following subfields:

DCCH_FRAME_SIZE	2
FOR_DCCH_LEN	3
FOR_DCCH_RC_MAP	3 × FOR_DCCH_LEN
REV_DCCH_LEN	3
REV_DCCH_RC_MAP	3 × REV_DCCH_LEN

DCCH_FRAME_SIZE – Frame Size supported indicator on the Dedicated Control Channel.

The mobile station shall set this field to the frame size supported for the forward and reverse DCCH, as shown in Table 2.7.4.27.2-1.

Table 2.7.4.27.2-1. DCCH Frame Size Supported

DCCH_FRAME_SIZE (binary)	Description
00	Either 5 ms or 20 ms frame sizes (not dynamically switchable)
01	20 ms frame size only
10	5 ms frame size only
11	Both 5 ms and 20 ms frame sizes (Dynamically switchable)

FOR_DCCH_LEN – Forward Dedicated Control Channel Configuration information length.

The mobile station shall set this field to the number of 3 bit units required to specify the length, in bits, of the FOR_DCCH_RC_MAP field.

FOR_DCCH_RC_MAP – Forward Dedicated Channel Radio Configuration information.

The mobile station shall set this field as described below to indicate which Radio Configurations (see [2]) are supported by the mobile station on the Forward Dedicated Control Channel.

This field consists of the sequence of 1-bit indicators, each indicating the mobile station support for specific Radio Configuration. Bit positions of these indicators in the field and corresponding Radio Configurations are specified in Table 2.7.4.27.1-1.

The mobile station shall set each indicator to '1' if the corresponding Radio Configuration on the Forward Dedicated Control Channel is supported by the mobile station; otherwise, the mobile station shall set the indicator to '0'. The mobile station shall set any unused bits in the field to '0'.

REV_DCCH_LEN – Reverse Dedicated Control Channel Configuration information length.

The mobile station shall set this field to the number of 3 bit units required to specify the length, in bits, of the REV_DCCH_RC_MAP field.

REV_DCCH_RC_MAP – Reverse Dedicated Control Channel Radio Configuration information.

The mobile station shall set this field as described below to indicate which Radio Configurations (see [2]) are supported by the mobile station on the Reverse Dedicated Control Channel.

This field consists of the sequence of 1-bit indicators, each indicating the mobile station support for specific Radio Configuration. Bit positions of these indicators in the field and corresponding Radio Configurations are specified in Table 2.7.4.27.1-2.

The mobile station shall set each indicator to '1' if the corresponding Radio Configuration on the Reverse Dedicated Control Channel is supported by the mobile station; otherwise, the mobile station shall set the indicator to '0'. The mobile station shall set any unused bits in the field to '0'.

2.7.4.27.3 FOR_SCH Type-Specific Fields

The Forward Supplemental Channel configuration capability information included in the FOR_SCH Type-specific fields contains the following subfields:

FOR_SCH_LEN	3
FOR_SCH_RC_MAP	3 × FOR_SCH_LEN
FOR_SCH_NUM	2

FOR_SCH_NUM occurrences of the following fields:

{ (FOR_SCH_NUM)

FOR_TURBO_SUPPORTED	1
FOR_MAX_TURBO_BLOCK_SIZE	0 or 4
FOR_CONV_SUPPORTED	1
FOR_MAX_CONV_BLOCK_SIZE	0 or 4
FOR_FRAME_40_SUPPORTED	1
FOR_FRAME_80_SUPPORTED	1
FOR_MAX_RATE	4

} (FOR_SCH_NUM)

FOR_SCH_LEN – Forward Supplemental Channel information length in units of 3 bits.

The mobile station shall set this field to the number of 3 bit units required to specify the length, in bits, of the FOR_SCH_RC_MAP field.

FOR_SCH_RC_MAP – Forward Supplemental Channel Radio Configuration capability.

The mobile station shall set this field as described below to indicate which Radio Configurations (see [2] Table 3.1.3.1-1) are supported by the mobile station on the Forward Supplemental Channel.

This field consists of the sequence of 1-bit indicators, each indicating the mobile station support for specific Radio Configuration. Bit positions of these indicators in the field and corresponding Radio Configurations are specified in Table 2.7.4.27.1-1.

The mobile station shall set each indicator to ‘1’ if the corresponding Radio Configuration on the Forward Supplemental Channel is supported by the mobile station; otherwise, the mobile station shall set the indicator to ‘0’. The mobile station shall set any unused bits in the field to ‘0’.

FOR_SCH_NUM – Number of Forward Supplemental Channels.

The mobile station shall set this field to the number of Forward Supplemental Channels supported by the mobile station.

If the FOR_SCH_NUM field is greater than zero, the mobile station shall include one occurrence of the following 8 fields for each Forward Supplemental Channel supported by the mobile station. The first occurrence is SCH0 related information. The second occurrence (if any) is SCH1 related information.

FOR_TURBO_SUPPORTED – Forward Turbo Coding supported indicator.

If the mobile station supports Turbo Coding on this Forward Supplemental Channel, it shall set this field to '1'; otherwise, the mobile station shall set this field to '0'.

FOR_MAX_TURBO_BLOCK_SIZE – Forward maximum Turbo Coding block size.

If the field FOR_TURBO_SUPPORTED is set to '0', the mobile station shall omit this field; otherwise the mobile station shall include this field and set it to the maximum block size allowed for Turbo coding (see Table 2.7.4.27.3-1).

Table 2.7.4.27.3-1. Block Size

FOR_MAX_TURBO_BLOCK_SIZE **REV_MAX_TURBO_BLOCK_SIZE** **FOR_MAX_CONV_BLOCK_SIZE** **REV_MAX_CONV_BLOCK_SIZE** **(binary)**	**Block Size**	
	R-SCH RC 3 and 5 **F-SCH RC 3, 4, 6, and 7**	**R-SCH RC 4 and 6** **F-SCH RC 5, 8 and 9**
0000	172	267
0001	360	552
0010	744	1128
0011	1512	2280
0100	3048	4584
0101	6120	9192
0110	12264	20712

RESERVED	All other values are reserved

FOR_CONV_SUPPORTED – Forward Convolutional Coding supported indicator.

If the mobile station supports Convolutional Coding on this Forward Supplemental Channel, it shall set this field to '1'; otherwise, the mobile station shall set this field to '0'.

FOR_MAX_CONV_BLOCK_SIZE – Forward maximum Convolutional Coding block size.

If the field FOR_CONV_SUPPORTED is set to '0', the mobile station shall omit this field; otherwise the mobile station shall include this field and set it to the maximum block size allowed for Convolutional coding. (see Table 2.7.4.27.3-1)

FOR_FRAME_40_SUPPORTED – Forward 40ms frame indicator.

If the mobile station supports 40 ms frames on this Forward Supplemental Channel, it shall set this field to '1'; otherwise, the mobile station shall set this field to '0'.

FOR_FRAME_80_SUPPORTED – Forward 80ms frame Indicator.

If the mobile station supports 80 ms frames on this Forward Supplemental Channel, it shall set this field to '1'; otherwise, the mobile station shall set this field to '0'.

FOR_MAX_RATE - Maximum forward supplemental channels rate

The mobile station shall set this field according to Table 2.7.4.27.3-2 to indicate the maximum forward supplemental channel frame rate supported.

Table 2.7.4.27.3-2. SCH Data Rate

REV_MAX_RATE FOR_MAX_RATE (binary)	Max Rate (kbps)	
	R-SCH RC 3, 5	R-SCH RC 4, 6
	F-SCH RC 3, 4, 6, 7	F-SCH RC 5, 8, 9
0000	9.6	14.4
0001	19.2	28.8
0010	38.4	57.6
0011	76.8	115.2
0100	153.6	230.4
0101	307.2	259.2
0110	614.4	460.8
0111	Reserved	518.4
1000	Reserved	1036.8
RESERVED	All other values are reserved	

2.7.4.27.4 REV_SCH Type-Specific Fields

The Reverse Supplemental Channel configuration capability information included in the REV_SCH Type-specific fields contains the following subfields:

REV_SCH_LEN	3
REV_SCH_RC_MAP	3 ×x REV_SCH_LEN
REV_SCH_NUM	2

REV_SCH_NUM occurrences of the following fields:

{ (REV_SCH_NUM)

REV_TURBO_SUPPORTED	1
REV_MAX_TURBO_BLOCK_SIZE	0 or 4
REV_CONV_SUPPORTED	1
REV_MAX_CONV_BLOCK_SIZE	0 or 4
REV_FRAME_40_SUPPORTED	1
REV_FRAME_80_SUPPORTED	1
REV_MAX_RATE	4

} (REV_SCH_NUM)

REV_SCH_LEN – Reverse Supplemental Channel information length in units of 3 bits.

The mobile station shall set this field to the number of 3 bit units required to specify the length, in bits, of the REV_SCH_RC_MAP field.

REV_SCH_RC_MAP – Reverse Supplemental Channel Radio Configuration capability.

The mobile station shall set this field as described below to indicate which Radio Configurations (See [2] Table 2.1.3.1-1) are supported by the mobile station on the Reverse Supplemental Channel.

This field consists of the sequence of 1-bit indicators, each indicating the mobile station support for specific Radio Configuration. Bit positions of these indicators in the field and corresponding Radio Configurations are specified in Table 2.7.4.27.1-2.

The mobile station shall set each indicator to ‘1’ if the corresponding Radio Configuration on the Reverse Supplemental Channel is supported by the mobile station; otherwise, the mobile station shall set the indicator to ‘0’. The mobile station shall set any unused bits in the field to ‘0’.

REV_SCH_NUM – Number of Reverse Supplemental Channels

The mobile station shall set this field to the number of Reverse Supplemental Channels supported by the mobile station.

If the REV_SCH_NUM field is greater than zero, the mobile station shall include one occurrence of the following 8 fields for each Reverse Supplemental Channel supported by the mobile station. The first occurrence is SCH0 related information. The second occurrence (if any) is SCH1 related information.

REV_TURBO_SUPPORTED – Reverse Turbo Coding supported indicator.

If the mobile station supports Turbo Coding on this Reverse Supplemental Channel, it shall set this field to ‘1’; otherwise, the mobile station shall set this field to ‘0’.

REV_MAX_TURBO_BLOCK_SIZE – Reverse maximum Turbo Coding block size.

If the field REV_TURBO_SUPPORTED is set to ‘0’, the mobile station shall omit this field; otherwise the mobile station shall include this field and set it to the maximum block size allowed for Turbo coding (see Table 2.7.4.27.3-1).

REV_CONV_SUPPORTED– Reverse Convolutional Coding supported indicator.

If the mobile station supports Convolutional Coding on this Reverse Supplemental Channel, it shall set this field to ‘1’; otherwise, the mobile station shall set this field to ‘0’.

REV_MAX_CONV_BLOCK_SIZE – Reverse maximum Convolutional Coding block size.

If the field REV_CONV_SUPPORTED is set to ‘0’, the mobile station shall omit this field; otherwise the mobile station shall include this field and set it to the maximum block size allowed for Convolutional coding (see Table 2.7.4.27.3-1).

REV_FRAME_40_SUPPORTED – Reverse 40ms frame indicator.

If the mobile station supports 40 ms frames on this Reverse Supplemental Channel, it shall set this field to ‘1’; otherwise, the mobile station shall set this field to ‘0’.

REV_FRAME_80_SUPPORTED – Reverse 80ms frame indicator.

If the mobile station supports 80 ms frames on this Reverse Supplemental Channel, it shall set this field to ‘1’; otherwise, the mobile station shall set this field to ‘0’.

REV_MAX_RATE – Maximum reverse supplemental channels rate

The mobile station shall set this field according to Table 2.7.4.27.3-2 to indicate the maximum reverse supplemental channel frame rate supported.

2.7.4.27.5 FOR_PDCH Type-specific Fields

The Forward Packet Data Channel configuration capability information included in the FOR_PDCH Type-specific fields contains the following subfields:

ACK_DELAY	1
NUM_ARQ_CHAN	2
FOR_PDCH_LEN	2
FOR_PDCH_RC_MAP	3 × (FOR_PDCH_LEN + 1)
CH_CONFIG_SUP_MAP_LEN	2
CH_CONFIG_SUP_MAP	3 × (CH_CONFIG_SUP_MAP_LEN + 1)

ACK_DELAY – Delay for the acknowledgment sent on the Reverse Acknowledgment Channel.

If the mobile station requires a 2-slot delay to send an acknowledgment on the R-ACKCH, then the mobile station shall set this subfield to ‘1’; otherwise (the mobile station requires a 1-slot delay), the mobile station shall set this subfield to ‘0’.

NUM_ARQ_CHAN – Number of Physical Layer ARQ Channels supported.

The mobile station shall set this subfield to the number of Physical Layer ARQ Channels that it supports, minus two.

The mobile station shall not set this field to ‘11’.

FOR_PDCH_LEN – Forward Packet Data Channel Configuration information length.

The mobile station shall set this subfield to one less than the number of 3 bit units required to specify the length of the FOR_PDCH_RC_MAP subfield.

FOR_PDCH_RC_MAP – Forward Packet Data Channel Radio Configuration information.

The mobile station shall set this subfield as described below to indicate which Radio Configurations (see [2]) are supported by the mobile station on the Forward Packet Data Channel.

This subfield consists of the sequence of 1-bit indicators, each indicating the mobile station support for a specific Radio Configuration. Bit positions of these indicators in the subfield and corresponding Radio Configurations are specified in Table 2.7.4.27.5-1.

The mobile station shall set each indicator to '1' if the corresponding Radio Configuration on the Forward Packet Data Channel is supported by the mobile station; otherwise, the mobile station shall set the indicator to '0'. The mobile station shall set any unused bits in the subfield to '0'.

Table 2.7.4.27.5-1. Forward Packet Data Channel Radio Configurations Supported

Subfield	Length (bits)	Subfield Description
RC10	1	Radio Configuration 10
Reserved	3 × (FOR_PDCH_LEN + 1) -1	Reserved

CH_CONFIG_SUP_MAP_LEN – Channel Configuration Supported Bitmap length.

The mobile station shall set this field to one less than the number of 3 bit units required to specify the length, in bits, of the CH_CONFIG_SUP_MAP field.

CH_CONFIG_SUP_MAP – Channel Configuration Supported Bitmap.

The mobile station shall set this subfield as described below to indicate which physical channel configurations are supported by the mobile station.

This subfield consists of the sequence of 1-bit indicators, each indicating the mobile station support for a specific channel configuration. Bit positions of these indicators in the subfield and corresponding channel configurations are specified in Table 2.7.4.27.5-2.

The mobile station shall set each indicator to '1' if the corresponding channel configuration is supported by the mobile station; otherwise, the mobile station shall set the indicator to '0'. The mobile station shall set any unused bits in the field to '0'.

The mobile station shall set the subfield F-PDCH_1 to '1', or the subfield F-PDCH_2 to '1', or the subfields F-PDCH_1 and F-PDCH_2 to '1'.

The mobile station shall set the subfields F-PDCH_1 and F-PDCH_3 to the same value.

The mobile station shall set the subfields F-PDCH_2 and F-PDCH_4 to the same value.

Table 2.7.4.27.5-2. F-PDCH Channel Configurations Supported

Subfield	Length (bits)	Subfield Description
F-PDCH_1	1	F-PDCH + F-CPCCH + R-FCH
F-PDCH_2	1	F-PDCH + F-CPCCH + R-DCCH
F-PDCH_3	1	F-PDCH + F-FCH + R-FCH
F-PDCH_4	1	F-PDCH + F-DCCH + R-DCCH
F-PDCH_5	1	F-PDCH + F-FCH + R-FCH + R-DCCH
F-PDCH_6	1	F-PDCH + F-FCH + R-FCH + F-DCCH + R-DCCH

2.7.4.27.6 REV_PDCH Type-specific Fields

The Reverse Packet Data Channel configuration capability information included in the REV_PDCH Type-specific fields contains the following subfields:

REV_PDCH_LEN	2
REV_PDCH_RC_MAP	3 × (REV_PDCH_LEN + 1)
REV_PDCH_CH_CONFIG_SUP_MAP_LEN	2
REV_PDCH_CH_CONFIG_SUP_MAP	3 × (REV_CH_CONFIG_SUP_MAP_LEN + 1)
REV_PDCH_MAX_SIZE_SUPPORTED_ENCODER_PACKET	2

REV_PDCH_LEN – Reverse Packet Data Channel Configuration information length.

The mobile station shall set this subfield to one less than the number of 3 bit units required to specify the length of the REV_PDCH_RC_MAP subfield.

REV_PDCH_RC_MAP – Reverse Packet Data Channel Radio Configuration information.

The mobile station shall set this subfield as described below to indicate which Radio Configurations (see [2]) are supported by the mobile station on the Reverse Packet Data Channel.

This subfield consists of the sequence of 1-bit indicators, each indicating the mobile station support for a specific Radio Configuration. Bit positions of these indicators in the subfield and corresponding Radio Configurations are specified in Table 2.7.4.27.6-1.

The mobile station shall set each indicator to ‘1’ if the corresponding Radio Configuration on the Reverse Packet Data Channel is supported by the mobile station; otherwise, the mobile station shall set the indicator to ‘0’. The mobile station shall set any unused bits in the subfield to ‘0’.

Table 2.7.4.27.6-1. Reverse Packet Data Channel Radio Configurations Supported

Subfield	Length (bits)	Subfield Description
RC7	1	Radio Configuration 7
Reserved	3 × (REV_PDCH_LEN + 1) -1	Reserved

REV_PDCH_CH_CONFIG_SUP_MAP_LEN – Reverse Packet Data Channel Channel Configuration Supported Bitmap length.

The mobile station shall set this field to one less than the number of 3 bit units required to specify the length, in bits, of the REV_PDCH_CH_CONFIG_SUP_MAP field.

REV_PDCH_CH_CONFIG_SUP_MAP – Reverse Packet Data Channel Channel Configuration Supported Bitmap.

The mobile station shall set this subfield as described below to indicate which physical channel configurations are supported by the mobile station.

This subfield consists of the sequence of 1-bit indicators, each indicating the mobile station support for a specific channel configuration. Bit positions of these indicators in the subfield and corresponding channel configurations are specified in Table 2.7.4.27.6-2.

The mobile station shall set each indicator to ‘1’ if the corresponding channel configuration is supported by the mobile station; otherwise, the mobile station shall set the indicator to ‘0’. The mobile station shall set any unused bits in the field to ‘0’. The mobile station shall set the indicator corresponding to the channel configuration F/R-PDCH_0 to '1'.

The mobile station shall set the subfield F/R-PDCH_1 to ‘1’, or the subfield F/R-PDCH_2 to ‘1’, or the subfields F/R-PDCH_1 and F/R-PDCH_2 to ‘1’.

The mobile station shall set the subfields F/R-PDCH_1 and F/R-PDCH_3 to the same value.

The mobile station shall set the subfields F/R-PDCH_2 and F/R-PDCH_4 to the same value.

Table 2.7.4.27.6-2. F/R-PDCH Channel Configurations Supported

Subfield of F/R-PDCH Channel Configurations	Length (bits)	Subfield Description
F/R-PDCH_0	1	F-PDCH + R-PDCH + F-CPCCH
F/R-PDCH_1	1	F-PDCH + R-PDCH +F-CPCCH + R-FCH
F/R-PDCH_2	1	F-PDCH + R-PDCH + F-CPCCH + R-DCCH
F/R-PDCH_3	1	F-PDCH + R-PDCH + F-FCH + R-FCH
F/R-PDCH_4	1	F-PDCH + R-PDCH + F-DCCH + R-DCCH
F/R-PDCH_5	1	F-PDCH + R-PDCH + F-FCH + R-FCH + R-DCCH
F/R-PDCH_6	1	F-PDCH + R-PDCH + F-FCH + R-FCH + F-DCCH + R-DCCH

REV_PDCH_MAX_SIZE_SUPPORTED_ENCODER_PACKET - Reverse Packet Data Channel Maximum Size Encoder Packet supported

The mobile station shall set this field to the maximum size encoder packet it supports as specified in Table 2.7.4.27.6-3. (see [2] and [3]).

Table 2.7.4.27.6-3. Maximum supported encoder packet size.

REV_PDCH_MAX_SIZE_SUPPORTED _ENCODER_PACKET (binary)	Maximum supported encoder packet size. (bits)
00	12312
01	15384
10	18456
11	Reserved

2.7.4.27.7 FUNDICATED_BCMC Type-specific Fields

The Fundicated Channel BCMC capability information included in the FUNDICATED_BCMC Type-specific fields contains the following subfields:

FUNDICATED_BCMC_CH_SUP_MAP_LEN	2
FUNDICATED_BCMC_CH_SUP_MAP	3 × (FUNDICATED_BCMC_CH_SUP_MAP_LEN +1)

FUNDICATED_BCMC_CH_SUP_MAP_LEN – Fundicated Channel BCMC channel configurations supported bitmap length.

The mobile station shall set this field to one less than the number of 3 bit units required to specify the length, in bits, of the FUNDICATED_BCMC_CH_SUP_MAP field.

FUNDICATED_BCMC_CH_SUP_MAP – Fundicated Channel BCMC channel configurations supported bitmap.

The mobile station shall set this subfield as described below to indicate which physical channel configurations are supported by the mobile station.

This subfield consists of the sequence of 1-bit indicators, each indicating the mobile station support for a specific channel configuration. Bit positions of these indicators in the subfield and corresponding channel configurations are specified in Table 2.7.4.27.7-1.

The mobile station shall set each indicator to ‘1’ if the corresponding channel configuration is supported by the mobile station; otherwise, the mobile station shall set the indicator to ‘0’. The mobile station shall set any unused bits in the field to ‘0’.

The mobile station shall not set all the indicators in this subfield to ‘0’.

Table 2.7.4.27.7-1. Fundicated BCMC Channel Configurations Supported

Subfield	Length (bits)	Subfield Description
Fundicated BCMC Channel Configuration 1	1	a) F-FCH + F-DCCH + R-DCCH b) F-PDCH + F-FCH + F-DCCH + R-DCCH, if F-PDCH is supported c) F-PDCH + R-PDCH + F-FCH + F-DCCH + R-DCCH, if R-PDCH is supported
Fundicated BCMC Channel Configuration 2	1	a) F-FCH + R-FCH + F-DCCH + R-DCCH b) F-PDCH + F-FCH + R-FCH + F-DCCH + R-DCCH, if F-PDCH is supported c) F-PDCH + R-PDCH + F-FCH + R-FCH + F-DCCH + R-DCCH, if R-PDCH is supported
Fundicated BCMC Channel Configuration 3	1	a) F-CPCCH + F-DCCH + R-DCCH b) F-PDCH + F-CPCCH + F-DCCH + R-DCCH, if F-PDCH is supported c) F-PDCH + R-PDCH + F-CPCCH + F-DCCH + R-DCCH, if R-PDCH is supported
Fundicated BCMC Channel Configuration 4	1	a) F-CPCCH + F-FCH + F-DCCH + R-DCCH b) F-PDCH + F-CPCCH + F-FCH + F-DCCH + R-DCCH is supported c) F-PDCH + R-PDCH + F-CPCCH + F-FCH + F-DCCH + R-DCCH, if R-PDCH is supported
Fundicated BCMC Channel Configuration 5	1	a) F-CPCCH + F-FCH + R-FCH + F-DCCH + R-DCCH b) F-PDCH + F-CPCCH + F-FCH + R-FCH + F-DCCH + R-DCCH is supported c) F-PDCH + R-PDCH + F-CPCCH + F-FCH + R-FCH + F-DCCH + R-DCCH, if R-PDCH is supported
Reserved	1	Reserved

2.7.4.28 Extended Multiplex Option Information

This information record can be included in a *Status Response Message* or an *Extended Status Response Message* to return multiplex option information about the mobile station.

Type-Specific Field	Length (bits)
NUM_MO_FOR_FCH	4

NUM_MO_FOR_FCH occurrences of the following record:

{ (NUM_MO_FOR_FCH)

MO_FOR_FCH	16
FOR_NUM_BITS_FCH	8

} (NUM_MO_FOR_FCH)

NUM_MO_REV_FCH	4

NUM_MO_REV_FCH occurrences of the following record:

{ (NUM_MO_REV_FCH)

MO_REV_FCH	16
REV_NUM_BITS_FCH	8

} (NUM_MO_REV_FCH)

NUM_MO_FOR_DCCH	4

NUM_MO_FOR_DCCH occurrences of the following record:

{ (NUM_MO_FOR_DCCH)

MO_FOR_DCCH	16

} (NUM_MO_FOR_DCCH)

NUM_MO_REV_DCCH	4

NUM_MO_REV_DCCH occurrences of the following record:

{ (NUM_MO_REV_DCCH)

MO_REV_DCCH	16

} (NUM_MO_REV_DCCH)

NUM_MO_FOR_SCH	4

NUM_MO_FOR_SCH occurrences of the following record:

{ (NUM_MO_FOR_SCH)

FOR_SCH_ID	1
MO_FOR_SCH	16

} (NUM_MO_FOR_SCH)

(continued on next page)

1

Type-Specific Field	Length (bits)
NUM_MO_REV_SCH	4

NUM_MO_REV_SCH occurrences of the following record:

{ (NUM_MO_REV_SCH)

REV_SCH_ID	1
MO_REV_SCH	16

} (NUM_MO_REV_SCH)

NUM_MO_FOR_PDCH	4

NUM_MO_FOR_PDCH occurrences of the following record:

{ (NUM_MO_FOR_PDCH)

MO_FOR_PDCH	16

} (NUM_MO_FOR_PDCH)

NUM_MO_REV_PDCH	4

NUM_MO_REV_PDCH occurrences of the following record:

{ (NUM_MO_REV_PDCH)

MO_REV_PDCH	16

} (NUM_MO_REV_PDCH)

RESERVED	0 - 7 (as needed)

NUM_MO_FOR_FCH – Number of Forward Fundamental Channel Multiplex Options.

The mobile station shall set this field to the number of the Forward Fundamental Channel Multiplex Options supported by the mobile station.

If NUM_MO_FOR_FCH is not equal to '0000', the mobile station shall include NUM_MO_FOR_FCH occurrences of the following two fields for each supported Forward Fundamental Channel multiplex option:

MO_FOR_FCH – Forward Fundamental Channel multiplex option.

The mobile station shall set this field to the Forward Fundamental Channel multiplex option.

FOR_NUM_BITS_FCH– Forward Fundamental Channel number of bits per frame.

The mobile station shall set this field as described below to indicate which number of bits per frameare supported by the mobile station on the Forward Fundamental Channel.

This field consists of the sequence of 1-bit indicators, each indicating the mobile station support for specific number of bits per frame. Bit positions of these indicators in the field and corresponding number of bits per frameare specified in Table 2.7.4.28-1 if MO_FOR_FCH is equal to 1, Table 2.7.4.28-2 if MO_FOR_FCH is equal to 2, and Table 2.7.4.28-3 if MO_FOR_FCH is equal to 0x704.

The mobile station shall set each indicator to '1' if the corresponding number of bits per frameon the Forward Fundamental Channel is supported by the mobile station; otherwise, the mobile station shall set the indicator to '0'.

Table 2.7.4.28-1. Forward Fundamental Channel Number of Bits per Frame for MO_FOR_FCH equal to 1

Subfield	Length (bits)	Subfield Description
RS1_9600_FOR	1	172 bits per F-FCH frame
RS1_4800_FOR	1	80 bits per F-FCH frame
RS1_2400_FOR	1	40 bits per F-FCH frame
RS1_1200_FOR	1	16bits per F-FCH frame
RESERVED	4	Reserved Bits

Table 2.7.4.28-2. Forward Fundamental Channel Number of Bits per Frame for MO_FOR_FCH equal to 2

Subfield	Length (bits)	Subfield Description
RS2_14400_FOR	1	267 bits per F-FCH frame
RS2_7200_FOR	1	125 bits per F-FCH frame
RS2_3600_FOR	1	55 bits per F-FCH frame
RS2_1800_FOR	1	21 bits per F-FCH frame
RESERVED	4	Reserved Bits

Table 2.7.4.28-3. Forward Fundamental Channel Number of Bits per Frame for MO_FOR_FCH equal to 0x704

Subfield	Length (bits)	Subfield Description
R1	1	Highest possible number of bits on F-FCH (specified by NUM_BITS_S[FFCH_NBIT_TABLE_ID][0000])
R2	1	Second highest possible number of bits on F-FCH (specified by NUM_BITS_S[FFCH_NBIT_TABLE_ID][0001])
R3	1	Third highest possible number of bits on F-FCH (specified by NUM_BITS_S[FFCH_NBIT_TABLE_ID][0010])
R4	1	Forth highest possible number of bits on F-FCH (specified by NUM_BITS_S[FFCH_NBIT_TABLE_ID][0011])
R5	1	Fifth Second highest possible number of bits on F-FCH (specified by NUM_BITS_S[FFCH_NBIT_TABLE_ID][0100])
R6	1	Sixth highest possible number of bits on F-FCH (specified by NUM_BITS_S[FFCH_NBIT_TABLE_ID][0101])
R7	1	Seventh highest possible number of bits on F-FCH (specified by NUM_BITS_S[FFCH_NBIT_TABLE_ID][0110])
R8	1	Eighth highest possible number of bits on F-FCH (specified by NUM_BITS_S[FFCH_NBIT_TABLE_ID][0111])

NUM_MO_REV_FCH – Number of Reverse Fundamental Channel Multiplex Options.

The mobile station shall set this field to the number of the Reverse Fundamental Channel Multiplex Options supported by the mobile station.

If NUM_MO_REV_FCH is not equal to '0000', the mobile station shall include NUM_MO_REV_FCH occurrences of the following two fields for each supported Reverse Fundamental Channel multiplex option:

MO_REV_FCH – Reverse Fundamental Channel multiplex option.

The mobile station shall set this field to the Reverse Fundamental Channel multiplex option.

REV_NUM_BITS_FCH– Reverse Fundamental Channel number of bits per frame.

The mobile station shall set this field as described below to indicate which number of bits per frame are supported by the mobile station on the Reverse Fundamental Channel.

This field consists of the sequence of 1-bit indicators, each indicating the mobile station support for number of bits per frame. Bit positions of these indicators in the field and corresponding number of bits per frame are specified in Table 2.7.4.28-4 if MO_REV_FCH is equal to 1, Table 2.7.4.28-5 if MO_REV_FCH is equal to 2, and Table 2.7.4.28-6 if MO_REV_FCH is equal to 0x704.

The mobile station shall set each indicator to '1' if the corresponding number of bits per frameon the Reverse Fundamental Channel is supported by the mobile station; otherwise, the mobile station shall set the indicator to '0'.

Table 2.7.4.28-4. Reverse Fundamental Channel Number of Bits per Frame for MO_REV_FCH equal to 1

Subfield	Length (bits)	Subfield Description
RS1_9600_REV	1	172 bits per R-FCH frame
RS1_4800_REV	1	80 bits per R-FCH frame
RS1_2400_REV	1	40 bits per R-FCH frame
RS1_1200_REV	1	16 bits per R-FCH frame
RESERVED	4	Reserved Bits

Table 2.7.4.28-5. Reverse Fundamental Channel Number of Bits per Frame for MO_REV_FCH equal to 2

Subfield	Length (bits)	Subfield Description
RS2_14400_REV	1	267 bits per R-FCH frame
RS2_7200_REV	1	125 bits per R-FCH frame
RS2_3600_REV	1	55 bits per R-FCH frame
RS2_1800_REV	1	21 bits per R-FCH frame
RESERVED	4	Reserved Bits

Table 2.7.4.28-6. Reverse Fundamental Channel Number of Bits per Frame for MO_REV_FCH equal to 0x704

Subfield	Length (bits)	Subfield Description
R1	1	Highest possible number of bits on R-FCH (specified by NUM_BITS_S[RFCH_NBIT_TABLE_ID][0000])
R2	1	Second highest possible number of bits on R-FCH (specified by NUM_BITS_S[RFCH_NBIT_TABLE_ID][0001])
R3	1	Third highest possible number of bits on R-FCH (specified by NUM_BITS_S[RFCH_NBIT_TABLE_ID][0010])
R4	1	Forth highest possible number of bits on R-FCH (specified by NUM_BITS_S[RFCH_NBIT_TABLE_ID][0011])
R5	1	Fifth Second highest possible number of bits on R-FCH (specified by NUM_BITS_S[RFCH_NBIT_TABLE_ID][0100])
R6	1	Sixth highest possible number of bits on R-FCH (specified by NUM_BITS_S[RFCH_NBIT_TABLE_ID][0101])
R7	1	Seventh highest possible number of bits on R-FCH (specified by NUM_BITS_S[RFCH_NBIT_TABLE_ID][0110])
R8	1	Eighth highest possible number of bits on R-FCH (specified by NUM_BITS_S[RFCH_NBIT_TABLE_ID][0111])

NUM_MO_FOR_DCCH – Number of Forward Dedicated Control Channel Multiplex Options.

The mobile station shall set this field to the number of the Forward Dedicated Control Channel Multiplex Options supported by the mobile station.

If NUM_MO_FOR_DCCH is not equal to '0000', the mobile station shall include NUM_MO_FOR_DCCH occurrence of the following one field for each supported Forward Dedicated Control Channel multiplex option:

MO_FOR_DCCH – Forward Dedicated Control Channel multiplex option.

The mobile station shall set this field to the Forward Dedicated Control Channel multiplex option.

NUM_MO_REV_DCCH – Number of Reverse Dedicated Control Channel Multiplex Options.

The mobile station shall set this field to the number of the Reverse Dedicated Control Channel Multiplex Options supported by the mobile station.

If NUM_MO_REV_DCCH is not equal to '0000', the mobile station shall include NUM_MO_REV_DCCH occurrence of the following one field for each supported Reverse Dedicated Control Channel multiplex option:

MO_REV_DCCH – Reverse Dedicated Control Channel multiplex option.

The mobile station shall set this field to the Reverse Dedicated Control Channel multiplex option.

NUM_MO_FOR_SCH – Number of Forward Supplemental Channel Multiplex Options.

The mobile station shall set this field to the number of Forward Supplemental Channel Multiplex Options supported by the mobile station included in this message. The mobile station shall include the multiplex option associated with the highest data rate it supports for each combination of MuxPDU type, rate set, and block size[11].

If NUM_MO_FOR_SCH is not equal to '0000', the mobile station shall include NUM_MO_FOR_SCH occurrence of the following two fields:

FOR_SCH_ID – Forward Supplemental Channel identifier.

The mobile station shall set this field to specify the Forward Supplemental Channel to which the Forward Supplemental multiplex option supported by the mobile station corresponds.

MO_FOR_SCH – Forward Supplemental Channel multiplex option.

The mobile station shall set this field to the Forward Supplemental Channel multiplex option associated with the maximum data rate (see [3]) that the mobile station supports[12].

NUM_MO_REV_SCH – Number of Reverse Supplemental Channel Multiplex Options.

---

[11] If any Rate Set 1 multiplex option is included, then mobile station support of MuxPDU Type 1 is implied and the mobile station is not required to include multiplex option 0x03. If any Rate Set 2 multiplex option is included, then mobile station support of MuxPDU Type 2 is implied and the mobile station is not required to include multiplex option 0x04 (see [3]).

[12] If the mobile station supports the multiplex option associated with the maximum data rate, the mobile station shall support all lower data rates as specified in [3].

The mobile station shall set this field to the number of Reverse Supplemental Channel Multiplex Options included in this message. The mobile station shall include the multiplex option associated with the highest data rate it supports for each combination of MuxPDU type, rate set, and block size[13].

If NUM_MO_REV_SCH is not equal to '0000', the mobile station shall include NUM_MO_REV_SCH occurrence of the following two fields:

REV_SCH_ID – Reverse Supplemental Channel identifier.

The mobile station shall set this field to specify the Reverse Supplemental Channel to which the Reverse Supplemental multiplex option supported by the mobile station corresponds.

MO_REV_SCH – Reverse Supplemental Channel multiplex option.

The mobile station shall set this field to the Reverse Supplemental Channel multiplex option associated with the maximum data rate (see [3]) that the mobile station supports[14].

NUM_MO_FOR_PDCH – Number of Forward Packet Data Channel multiplex options.

The mobile station shall set this field to the number of Forward Packet Data Channel Multiplex Options supported by the mobile station.

If NUM_MO_FOR_PDCH is not equal to '0000', the mobile station shall include NUM_MO_FOR_PDCH occurrences of the following one-field record:

MO_FOR_PDCH – Forward Packet Data Channel multiplex option.

The mobile station shall set this field to the Forward Packet Data Channel multiplex option.

NUM_MO_REV_PDCH – Number of Reverse Packet Data Channel multiplex options.

The mobile station shall set this field to the number of Reverse Packet Data Channel Multiplex Options supported by the mobile station.

If NUM_MO_REV_PDCH is not equal to '0000', the mobile station shall include NUM_MO_REV_PDCH occurrences of the following one-field record:

---

[13] If any Rate Set 1 multiplex option is included, then mobile station support of MuxPDU Type 1 is implied and the mobile station is not required to include multiplex option 0x03. If any Rate Set 2 multiplex option is included, then mobile station support of MuxPDU Type 2 is implied and the mobile station is not required to include multiplex option 0x04 (see [3]).

[14] If the mobile station supports the multiplex option associated with the maximum data rate, the mobile station shall support all lower data rates as specified in [3].

MO_REV_PDCH – Reverse Packet Data Channel multiplex option.

The mobile station shall set this field to the Reverse Packet Data Channel multiplex option (see [3]).

RESERVED – Reserved bits.

The mobile station shall add reserved bits as needed in order to make the length of the entire information record equal to an integer number of octets. The mobile station shall set these bits to '0'.

2.7.4.29 Geo-Location Capability

This information record identifies the geo-location capabilities of the mobile station. The mobile station shall use the following fixed-length format for the type-specific fields:

Type-Specific Field	Length (bits)
GEO_LOC	3
RESERVED	5

GEO_LOC – Geo-location.

The mobile station shall set this field to the value shown in Table 2.7.4. 29-1.

Table 2.7.4.29-1. Geo-location Codes

GEO_LOC (binary)	Type of Wireless Assisted GPS Identifiers
000	No mobile station assisted geo-location capabilities
001	IS-801 capable (Advanced Forward Link Triangulation only)
010	IS-801 capable (Advanced Forward Link Triangulation and Global Positioning Systems)
011	Global Positioning Systems only
All other GEO_LOC_TYPE values are reserved.	

RESERVED – Reserved bit.

The mobile station shall set this field to ‘00000’.

2.7.4.30 Band Subclass Information

This information record can be included in a *Status Response Message*, or an *Extended Status Response Message* to return band subclass information about the mobile station.

Type-Specific Field	Length (bits)
BAND_SUBCLASS_INFO	8 × RECORD_LEN

BAND_SUBCLASS_INFO – Band subclass information.

This field indicates which band subclasses are supported by the mobile station.

The mobile station shall set this field to the band subclass information corresponding to the BAND_CLASS specified in the *Status Request Message*.

The mobile station shall set this field as follows:

- If the mobile station does support the BAND_CLASS specified in the the *Status Request Message* but there is no subclass defined for this band class, the mobile station shall set this field to '10000000' and set the RECORD_LEN field for this record to '00000001'.• Otherwise, the mobile station shall set the Nth most significant bit of this field to '1' if the Nth sub-band class defined in [45] corresponding to the BAND_CLASS specified in the *Status Request Message* is supported by the mobile station; otherwise, the mobile station shall set the Nth most significant bit of this field to '0'. Example of this field coding is shown in Figure 2.7.4.30-1.

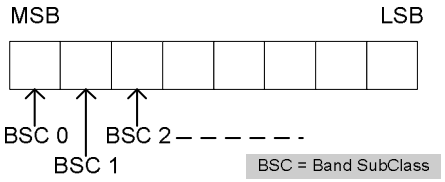

Figure 2.7.4.30-1. BAND_SUBCLASS_INFO field coding

The mobile station shall add reserved bits as needed in order to make the length of the entire information record equal to an integer number of octets. The mobile station shall set these bits to '0'.

2.7.4.31 Global Emergency Call

This information record identifies that an emergency call is being originated. This record may be included in a *Flash With Information Message* or an *Extended Flash With Information Message* and allows the user to originate an emergency call.

Type-Specific Field	**Length (bits)**
NUM_INCL	1
DIGIT_MODE	0 or 1
NUMBER_TYPE	0 or 3
NUMBER_PLAN	0 or 4
NUM_CHAR	0 or 8

NUM_CHAR occurrences of the following field:

{ (NUM_CHAR)

CHARi	4 or 8

} (NUM_CHAR)

MS_ORIG_POS_LOC_IND	1
RESERVED	0 to 7 (as needed)

NUM_INCL – Dialed number included indicator.

The mobile station shall set this field to ‘1’ to indicate that the dialed digits are included in this information record; otherwise, the mobile station shall set this field to ‘0’.

DIGIT_MODE – Digit mode indicator.

If NUM_INCL is set to ‘1’, the mobile station shall set this field to indicate whether the dialed digits are 4-bit DTMF codes or 8-bit ASCII codes using a specified numbering plan; otherwise, the mobile station shall omit this field.

To originate the call using the binary representation of DTMF digits, the mobile station shall set this field to ‘0’. To originate the call using ASCII characters, the mobile station shall set this field to ‘1’.

NUMBER_TYPE – Type of number.

If NUM_INCL is set to ‘1’ and the DIGIT_MODE field is set to ‘1’, the mobile station shall set this field to the NUMBER_TYPE value shown in Table 2.7.1.3.2.4-2 corresponding to the type of the called number, as defined in [7], Section 4.5.9; otherwise, the mobile station shall omit this field.

NUMBER_PLAN – Numbering plan.

If NUM_INCL is set to ‘1’ and the DIGIT_MODE field is set to ‘1’, the mobile station shall set this field to the NUMBER_PLAN value shown in Table 2.7.1.3.2.4-3 corresponding to the numbering plan used for the called number, as defined in [7], Section 4.5.9; otherwise, the mobile station shall omit this field.

NUM_CHAR – Number of characters.

If NUM_INCL is set to ‘1’, the mobile station shall set this field to the number of characters included in this record; otherwise, the mobile station shall omit this field.

CHARi – Character.

If the NUM_INCL is set to ‘1’, the mobile stations shall include NUM_CHAR occurrences of this field.

If the DIGIT_MODE field is set to ‘0’, the mobile station shall set each occurrence of this field to the code value shown in Table 2.7.1.3.2.4-4 corresponding to the dialed digit. If the DIGIT_MODE field is set to ‘1’, the mobile station shall set each occurrence of this field to the ASCII representation corresponding to the character, as specified in [9], with the most significant bit set to ‘0’.

MS_INIT_POS_LOC_IND – Mobile Initiated Position Location Session indicator.

The mobile station shall set this field to ‘1’ if $MS\_INIT\_POS\_LOC\_SUP\_IND_S$ is equal to ‘1’ and if the mobile station is to initiate a position location session associated with this emergency call; otherwise, the mobile station shall set this field to ‘0’.

RESERVED – Reserved bits.

The mobile station shall add reserved bits as needed in order to make the length of the entire information record equal to an integer number of octets. The mobile station shall set these bits to ‘0’.

2.7.4.32 Hook Status

This information record shall indicate the status of the hook switch in Wireless Local Loop mobile stations. The mobile station shall use the following fixed-length format for the type-specific fields:

Type-Specific Field	Length (bits)
HOOK_STATUS	4
RESERVED	4

HOOK_STATUS – WLL terminal hook status.

The mobile station shall set this sub-field to the value shown in Table 2.7.1.3.2.1-4 corresponding to the hook state.

RESERVED – Reserved bits.

The mobile station shall set this field to ‘0000’.

2.7.4.33 QoS Parameters

This information record conveys to the user the QoS parameters associated with the service to be provided:

Type-Specific Field	Length (bits)
QoS Parameters	variable
RESERVED	0 - 7 (as needed)

QoS Parameters - Block containing the QoS Parameters.

The mobile station shall set this field to the QoS parameters associated with the user (per subscription), service type (e.g., assured vs. non-assured services) and the service option. The details of the QoS parameters may be found in documents describing the service options.

RESERVED - Reserved bits for octet alignment.

The mobile station shall add the minimum number of bits necessary to make the record length in bits an integral multiple of 8. The mobile station shall set these bits to ‘0’.

2.7.4.34 Encryption Capability

This information record identifies the encryption capability of the mobile station.

Type-Specific Field	Length (bits)
SIG_ENCRYPT_SUP	8
UI_ENCRYPT_SUP	8

SIG_ENCRYPT_SUP – Signaling Encryption supported indicator.

The mobile station shall set this field to indicate which signaling encryption algorithms are supported by the mobile station, as shown in Table 2.7.1.3.2.1-5.

The mobile station shall set the subfields as follows:

The mobile station shall set the CMEA subfield to ‘1’.

The mobile station shall set each subfield to ‘1’ if the corresponding signaling encryption algorithm is supported by the mobile station; otherwise, the mobile station shall set the subfield to ‘0’.

The mobile station shall set the RESERVED subfield to ‘00000’.

UI_ENCRYPT_SUP – User information encryption supported indicator.

The mobile station shall set this field to indicate the supported user information encryption algorithms, as shown in Table 2.7.1.3.2.4-9.

The mobile station shall set each subfield to ‘1’ if the corresponding user information encryption algorithm is supported by the mobile station; otherwise, the mobile station shall set the subfield to ‘0’.

The mobile station shall set the RESERVED subfield to ‘000000’.

2.7.4.35 Signaling Message Integrity Capability

This information record identifies the signaling message integrity capability of the mobile station.

Type-Specific Field	Length (bits)
SIG_INTEGRITY_SUP	8

SIG_INTEGRITY_SUP – Signaling message integrity supported by the mobile station.

The mobile station shall set this field to indicate the supported message integrity algorithm in addition to the default integrity algorithm.

This field consists of the subfields shown in Table 2.7.1.3.2.1-6.

The mobile station shall set each subfield to ‘1’ if the corresponding message integrity algorithm is supported by the mobile station; otherwise, the mobile station shall set the subfield to ‘0’.

The mobile station shall set the RESERVED subfield to ‘00000000’.

2.7.4.36 UIM_ID

This information record can be included in a *Status Response Message* or an *Extended Status Response Message* to return the mobile station UIM_ID.

Type-Specific Field	**Length (bits)**
UIM_ID_LEN	4
UIM_ID	8 × UIM_ID_LEN
RESERVED	0 - 7 (as needed)

UIM_ID_LEN – The length of mobile station User Identity Module identifier.

The mobile station shall set this field to the length, in units of octets, of its User Identity Module identifier. If the mobile station does not have a User Identity Module identifier, the mobile station shall set this field to ‘0000’.

UIM_ID – Mobile station User Identity Module identifier.

The mobile station shall set this field to its User Identity Module identifier (see [40]).

RESERVED - Reserved bits for octet alignment.

The mobile station shall add the minimum number of bits necessary to make the record length in bits an integral multiple of 8. The mobile station shall set these bits to ‘0’.

2.7.4.37 ESN_ME

This information record can be included in a *Status Response Message* or an *Extended Status Response Message* to return the mobile station ESN_ME.

Type-Specific Field	Length (bits)
ESN_ME_LEN	4
ESN_ME	8 × ESN_ME_LEN
RESERVED	0 - 7 (as needed)

ESN_ME_LEN – The length of mobile equipment electronic serial number.

The mobile station shall set this field to the length, in units of octets, of its mobile equipment electronic serial number.

ESN_ME[15] – Mobile equipment electronic serial number.

The mobile station shall set this field to ESN_p (see 2.3.2).

RESERVED - Reserved bits for octet alignment.

The mobile station shall add the minimum number of bits necessary to make the record length in bits an integral multiple of 8. The mobile station shall set these bits to ‘0’.

[15] The ESN_ME field is always set to ESN_p and never carries UIM ID value.

2.7.4.38 MEID

This information record can be included in a *Status Response Message* or an *Extended Status Response Message* to return the mobile station MEID.

Type-Specific Field	**Length (bits)**
MEID_LEN	4
MEID	8 × MEID_LEN
RESERVED	0 - 7 (as needed)

MEID_LEN – The length of MEID.

The mobile station shall set this field to the length, in units of octets, of the MEID field in this record.

MEID – Mobile Equipment Identifier.

If the mobile station has a R-UIM which indicates that SF_EUIMID is to be used in place of MEID, the mobile station shall set this field to SF_EUIMID (see [40]); otherwise, the mobile station shall set this field to its $MEID_p$ (see 2.3.2).

RESERVED - Reserved bits for octet alignment.

The mobile station shall add the minimum number of bits necessary to make the record length in bits an integral multiple of 8. The mobile station shall set these bits to ‘0’.

2.7.4.39 Extended Keypad Facility

This information record can be included in a *Flash With Information Message* and allows the user to send characters entered via a keyboard or other such terminal.

Type-Specific Field	**Length (bits)**
NUMBER_INFO_INCL	1
NUMBER_TYPE	0 or 3
NUMBER_PLAN	0 or 4
NUM_FIELDS	6
NUM_FIELDS occurrences of the following field:	
{	
CHARi	8
}	
RESERVED	0 - 7 (as needed)

NUMBER_INFO_INCL – Number included indicator.

The mobile station shall set this field to '1' if NUMBER_TYPE and NUMBER_PLAN fields are included in this record; otherwise, the mobile station shall set this field to '0'.

NUMBER_TYPE – Type of number.

If NUMBER_INFO_INCL is set to '0', the mobile station shall omit this field; otherwise, the mobile shall set this field to the NUMBER_TYPE value shown in Table 2.7.1.3.2.4-2 corresponding to the characters included in this record, as defined in [7], Section 4.5.9.

If the mobile station determines that this number is an international number (for example, with a leading "+"or as specified in [39] for Plus Code Dialing or an international access code), the mobile station should set this field to '001'.

NUMBER_PLAN – Numbering plan.
If NUMBER_INFO_INCL is set to '0', the mobile station shall omit this field; otherwise, the mobile station shall set this field to the NUMBER_PLAN value shown in Table 2.7.1.3.2.4-3 corresponding to the numbering plan used for the characters in this record, as defined in [7], Section 4.5.9.

NUM_FIELDS – Number of characters in this message.
The mobile station shall set this field to the number of CHARi fields in this message.

CHARi – Character.

The mobile station shall include one occurrence of this field for each character entered. The mobile station shall set each occurrence of this field to the ASCII representation corresponding to the character entered, as specified in [9], with the most significant bit set to '0'.

RESERVED - Reserved bits for octet alignment.

The mobile station shall add the minimum number of bits necessary to make the record length in bits an integral multiple of 8. The mobile station shall set these bits to '0'.

2.7.4.40 SYNC_ID

This information record can be included in a *Status Response Message* or an *Extended Status Response Message* to return the SYNC_IDs corresponding to stored service configurations.

Type-Specific Field	**Length (bits)**
NUM_SYNC_ID	5
SID	0 or 15
NID	0 or 16

NUM_SYNC_ID occurrences of the following fields:

{ (NUM_SYNC_ID)

SYNC_ID_LEN	4
SYNC_ID	(8 x SYNC_ID_LEN)

} (NUM_SYNC_ID)

RESERVED	0 - 7 (as needed)

NUM_SYNC_ID – The number of SYNC_IDs included in this message.

The mobile station shall set this field to the number of SYNC_IDs, corresponding to the stored service configurations associated with SID_S and NID_S, included in this message. If the mobile station does not have any stored service configuration associated with SID_S and NID_S, the mobile station shall set this field to '00000'.

SID - System identification.

If the NUM_SYNC_ID field is set to '00000', the mobile station shall omit this field; otherwise, the mobile station shall include this field and set it as follows:

The mobile station shall set this field to SID_S.

NID - Network identification.

If the NUM_SYNC_ID field is set to '00000', the mobile station shall omit this field; otherwise, the mobile station shall include this field and set it as follows:

The mobile station shall set this field to NID_S.

The mobile station shall include NUM_SYNC_ID occurrences of the following variable length record:

SYNC_ID_LEN	-	Service Configuration synchronization identifier length. The mobile station shall set this field to the length (in octets) of the SYNC_ID field included in this message. The mobile station shall set this field to a value larger than zero.
SYNC_ID	-	Service Configuration synchronization identifier. The mobile station shall set this field to the synchronization identifier corresponding to a stored service configuration associated with SID and NID included in this message.
RESERVED	-	Reserved bits for octet alignment. The mobile station shall add the minimum number of bits necessary to make the record length in bits an integral multiple of 8. The mobile station shall set these bits to ‘0’.

2.7.4.41 Extended Terminal Information

This information record can be included in a *Status Response Message*, or an *Extended Status Response Message* to return configuration information about the mobile station.

Type-Specific Field	**Length (bits)**
MOB_P_REV	8
MOB_MFG_CODE	8
MOB_MODEL	8
MOB_FIRM_REV	16
SCM	8
LOCAL_CTRL	1
SLOT_CYCLE_INDEX	3
SIGN_SLOT_CYCLE_INDEX	0 or 1
SO_INCL	1
NUM_SO	0 or 6
{(NUM_SO + 1)	
SERVICE_OPTION	16
}(NUM_SO+ 1)	
SO_GROUP_INCL	1
NUM_SO_GROUP	0 or 5
{ (NUM_SO_GROUP + 1)	
SO_BITMAP_IND	2
SO_GROUP_NUM	0 or 5
SO_BITMAP	0 or 2^(1+ SO_BITMAP_IND)
} (NUM_SO_GROUP + 1)	
RESERVED	0 to 7 (as needed)

MOB_P_REV – Protocol revision of the mobile station.

If the status request does not specify a band class, the mobile station shall set this field to '00001100'; otherwise, the mobile station shall set this field to the MOB_P_REV associated with the requested band class and operating mode.

MOB_MFG_CODE – Manufacturer code.

This field identifies the manufacturer of the mobile station.

The mobile station shall set this field to the manufacturer code assigned to its manufacturer.

MOB_MODEL – Model number.

This number is assigned by the manufacturer for a particular model.

The mobile station shall set this field to the model number assigned by the manufacturer for this mobile station.

MOB_FIRM_REV – Firmware revision number.

This number is assigned by the manufacturer for a particular firmware version.

The mobile station shall set this field to the revision number assigned by the manufacturer for the firmware version running in this mobile station.

SCM – Station class mark.

The mobile station shall set this field to its station class mark. See 2.3.3.

LOCAL_CTRL – Local control indicator.

If local control is enabled, the mobile station shall set this field to '1'. If local control is disabled, the mobile station shall set this field to '0'. See [6].

SLOT_CYCLE_INDEX – Slot cycle index.

If the requested operating mode is CDMA and the mobile station is configured for slotted mode operation, the mobile station shall set this field to the absolute value of the registered slot cycle index, SLOT_CYCLE_INDEX_REG (see 2.6.2.1.1); otherwise, the mobile station shall set this field to '000'. The sign of the registered slot cycle, SLOT_CYCLE_INDEX_REG, is specified in the SIGN_SLOT_CYCLE_INDEX field of this message (see Table 2.7.1.3.2.1-8).

SIGN_SLOT_CYCLE_INDEX – Sign of the slot cycle index.

If the SLOT_CYCLE_INDEX field is set to '000', the mobile station shall omit this field; otherwise, the mobile station shall include this field and set it as follows:

The mobile station shall set this field as specified in Table 2.7.1.3.2.1-8 to the sign of the registered slot cycle index, SLOT_CYCLE_INDEX_REG (see 2.6.2.1.1). The absolute value of the registered slot cycle index, SLOT_CYCLE_INDEX_REG, is specified in the SLOT_CYCLE_INDEX field of this message.

SO_INCL - Service option inclusion indicator.

If there is a service option supported by the mobile station which does not belong to any service option group assigned (see [30]), the mobile station shall set this field '1'; otherwise, the mobile station shall set this field to '0'.

NUM_SO - Number of service option included indicator.

If the SO_INCL is set to '0', the mobile station shall omit this field; otherwise, the mobile station shall set this field to the number of service option to be included minus one.

If SO_INCL is set to '1', the mobile station shall include NUM_SO + 1 occurrences of the following variable-field record:

SERVICE_OPTION – Supported service option.

If the SO_INCL is set to '0', the mobile station shall omit this field; otherwise, the mobile station shall set this field as follow:

If the requested operating mode is CDMA, the mobile station shall includes one occurrence of this field for each service option supported by the mobile station (see [30]) which has no service option group number assigned.

SO_GROUP_INCL - Service option group inclusion indicator.

If the requested operating mode is CDMA, the mobile station shall set this field to '1' if any of the supported service option belongs to a service option group; otherwise, the mobile station shall set this field to '0'.

NUM_SO_GROUP - Number of service option group included indicator.

If the SO_GROUP_INCL is set to '0', the mobile station shall omit this field; otherwise, the mobile station shall set this field to the number of service option groups to be included minus one.

If SO_GROUP_INCL is set to '1', the mobile station shall include NUM_SO_GROUP + 1 occurrences of the following variable-field record:

SO_BITMAP_IND - Service option bitmap indicator.

The mobile station shall set this field as defined in Table 2.7.1.3.2.4-10.

SO_GROUP_NUM - Service option group number.

If SO_BITMAP_IND is included and not set to '00', the mobile station shall include this field and set this field to service option group number defined in [30], of the bitmap to be included in this message; otherwise, the mobile station shall omit this field.

SO_BITMAP – Service option bitmap.

If SO_BITMAP_IND is included and is not set to '00', the mobile station shall include the bitmap of the service option group (SO_GROUP_NUM); otherwise, the mobile station shall omit this field.

When the service option bitmap is included, if there are more than (2^(1+SO_BITMAP_IND)) service options defined in [30] for the service option group [SO_GROUP_NUM], the mobile station shall include the bitmap containing the least significant bits (2^(1+SO_BITMAP_IND)) for the service option group.

RESERVED – Reserved bits.

The mobile station shall set this field to ‘0’ to make the entire record octet-aligned.

2.7.4.42 Extended Service Option Information

This information record can be included in a *Status Response Message* or an *Extended Status Response Message* to return service option information about the mobile station or the service option group information requested by the base station.

Type-Specific Field	**Length (bits)**
SO_GROUP_INCL	1
NUM_SO_GROUP	0 or 5
{ (NUM_SO_GROUP+1)	
SO_BITMAP_IND	2
SO_GROUP_NUM	0 or 5
REV_BITMAP_INCL	0 or 1
FOR_SUP_SO_BITMAP	0 or 2^(1+SO_BITMAP_IND)
REV_SUP_SO_BITMAP	0 or 2^(1+ SO_BITMAP_IND)
} (NUM_SO_GROUP + 1)	
SO_INCL	1
NUM_SO	0 or 6
REVERSE_SUPPORT_INCL	0 or 1
{ (NUM_SO + 1)	
FORWARD_SUPPORT	1
REVERSE_SUPPORT	0 or 1
SERVICE_OPTION	16
} (NUM_SO + 1)	
RESERVED	0 - 7 (as needed)

SO_GROUP_INCL - Service option group inclusion indicator.

If the requested operating mode is CDMA, the mobile station shall set this field to ‘1’ if any of the supported service option belongs to a service option group; otherwise, the mobile station shall set this field to ‘0’.

NUM_SO_GROUP - Number of service option group included indicator.

If the SO_GROUP_INCL is set to ‘0’, the mobile station shall omit this field; otherwise, the mobile station shall set this field to the number of service option groups to be included minus one.

If SO_GROUP_INCL is set to ‘1’, the mobile station shall include NUM_SO_GORUP +1 occurrences of the following variable-field record:

SO_BITMAP_IND - Service option bitmap indicator.

The mobile station shall set this field as defined in Table 2.7.1.3.2.4-10.

SO_GROUP_NUM - Service option group number.

If SO_BITMAP_IND is included and not set to ‘00’, the mobile station shall include this field and set this field to service option group number defined in [30], of the bitmap to be included in this message; otherwise, the mobile station shall omit this field.

REV_BITMAP_INCL - Reverse traffic channel bitmap included indicator.

If SO_BITMAP_IND is included and set to ‘00’, the mobile station shall omit this field; otherwise the mobile station shall set this field as follow:

The mobile station shall set this field to ‘0’ to indicate FOR_SUP_SO_BITMAP is used to specify the service option supports for both forward traffic channel and reverse traffic channel; otherwise the mobile station shall set this field to ‘1’.

FOR_SUP_SO_BITMAP - Support bitmap indicator for Forward Traffic Channel.

If SO_BITMAP_IND is included and set to ‘00’, the mobile station shall omit this field; otherwise the mobile station shall include the bitmap of the service option group (SO_GROUP_NUM) as follow:

If REV_BITMAP_INCL is set to ‘1’:

- If the service option specified by FOR_SUP_SO_BITMAP is supported on forward traffic channel, the mobile station shall set the corresponding bit to ‘1’; otherwise, the mobile station shall set this bit to ‘0’.

Otherwise,

- If the service option specified by FOR_SUP_SO_BITMAP is supported on forward traffic channel and on reverse traffic channel, the mobile station shall set the corresponding bit to ‘1’; otherwise, the mobile station shall set this bit to ‘0’.

REV_SUP_SO_BITMAP - Support bitmap indicator for Reverse Traffic Channel.

If REV_BITMAP_INCL is included and set to ‘0’, the mobile station shall omit this field; otherwise the mobile station shall include the bitmap of the service option group (SO_GROUP_NUM) as follow:

If the service option specified by REV_SUP_SO_BITMAP is supported on reverse traffic channel, the mobile station shall set the corresponding bit to ‘1’; otherwise, the mobile station shall set this bit to ‘0’.

SO_INCL - Service option inclusion indicator.

If there is a service option supported by the mobile station which does not belong to any service option group assigned (see [30]), the mobile station shall set this field ‘1’; otherwise, the mobile station shall set this field to ‘0’.

NUM_SO - Number of service option included indicator.

If the SO_INCL is set to ‘0’, the mobile station shall omit this field; otherwise, the mobile station shall set this field to the number of service option to be included minus one.

REVERSE_SUPPORT_INCL - Reverse service option support included indicator.

If the SO_INCL is set to ‘0’, the mobile station shall omit this field; otherwise, the mobile station shall include this field and set it as follow:

The mobile station shall set this field to ‘0’ to indicate FORWARD_SUPPORT is used to specify the service option supports for both forward traffic channel and reverse traffic channel; otherwise the mobile station shall set this field to ‘1’.

If SO_INCL is set to ‘1’, the mobile station shall include NUM_SO + 1 occurrences of the following variable-field record:

FORWARD_SUPPORT – Support indicator for Forward Traffic Channel.

The mobile station shall set this field as follow:

If REVERSE_SUPPORT_INCL is set to ‘1’, the mobile station shall set this field to ‘1’ if the service option specified in the SERVICE_OPTION field is supported on the Forward Traffic Channel.

If REVERSE_SUPPORT_INCL is set to ‘0’, the mobile station shall set this field to ‘1’ if the service option specified in the SERVICE_OPTION field is supported on the forward traffic channel and on reverse traffic channel

REVERSE_SUPPORT – Support indicator for Reverse Traffic Channel.

If REVERSE_SUPPORT_INCL field is not included or is set to ‘0’, the mobile station shall omit this field; otherwise the mobile station shall include this field and set it as follows:

The mobile station shall set this field to ‘1’ if the service option specified in the SERVICE_OPTION field is supported on the Reverse Traffic Channel.

SERVICE_OPTION – Service option.

If the requested operating mode is CDMA, the mobile station shall includes one occurrence of this field for each service option supported by the mobile station (see [30]) which has no service option group number assigned.

RESERVED – Reserved bits.

The mobile station shall set all the bits of this field to ‘0’ to make the entire record octet-aligned.

2.7.4.43 Band Class and Band Subclass Information

When this information record is included in a *Status Response Message* or an *Extended Status Response Message*, the mobile station shall include all the band classes and band subclasses that it supports.

Type-Specific Field	**Length (bits)**
NUM_BAND_CLASS	3
NUM_BAND_CLASS + 1 occurrences of the following record:	
{ (NUM_BAND_CLASS + 1)	
BAND_CLASS_REC_LEN	5
BAND_CLASS	5
SUBCLASS_INFO_INCL	1
SUBCLASS_REC_LEN	0 or 5
SUBCLASS_REC_LEN + 1 occurrences of the following subrecord:	
{ (SUBCLASS_REC_LEN + 1)	
SUBCLASS_SUP	1
} (SUBCLASS_REC_LEN + 1)	
BAND_CLASS_RESERVED	0 – 7 (as needed)
} (NUM_BAND_CLASS + 1)	
RESERVED	0 – 7 (as needed)

NUM_BAND_CLASS – Number of band classes.

The mobile station shall set this field to the number of band classes included in the record minus one.

The mobile station shall include NUM_BAND_CLASS + 1 occurrences of the following record:

BAND_CLASS_REC_LEN – Band class information record length.

The mobile station shall set this field to the number of octets included in this record starting from this field and ending with BAND_CLASS_RESERVED.

BAND_CLASS – Band class

This field specifies a band class supported by the mobile station. The mobile station shall set this field according to the values defined in [45].

SUBCLASS_INFO_INCL – Band subclass information included

The mobile station shall set this field to ‘0’ when it is not aware of any band subclasses associated with the BAND_CLASS field above; otherwise, the base station shall set this field to ‘1’.

SUBCLASS_REC_LEN – Band subclass subrecord length

If SUBCLASS_INFO_INCL is set to ‘0’, the base station shall omit this field; otherwise, the mobile station shall set this field to the number of band subclass supported indicator fields included in the subrecord minus 1.

If the SUBCLASS_REC_LEN field is included, the mobile station shall include SUBCLASS_REC_LEN + 1 occurrences of the following subrecord. The first field included corresponds to band subclass ‘0’ and the Nth field included corresponds to band subclass ‘N-1’.

SUBCLASS_SUP – Band subclass supported indicator

The mobile station shall set this field to ‘1’ if the corresponding band subclass is supported for the associated BAND_CLASS; otherwise, the mobile station shall set this field to ‘0’.

BAND_CLASS_RESERVED – Reserved bits.

The mobile station shall add reserved bits as needed in order to make the length of the record equal to an integer number of octets. The mobile station shall set each of these bits to ‘0’.

RESERVED – Reserved bits.

The mobile station shall add reserved bits as needed in order to make the length of the entire record equal to an integer number of octets. The mobile station shall set each of these bits to ‘0’.

2.7.4.44 EXT_UIM_ID

This information record can be included in a *Status Response Message* or an *Extended Status Response Message* to return the mobile station EXT_UIM_ID.

Type-Specific Field	**Length (bits)**
EXT_UIM_ID_LEN	4
EXT_UIM_ID	8 × EXT_UIM_ID_LEN
RESERVED	0 - 7 (as needed)

EXT_UIM_ID_LEN – The length of mobile station Extended User Identity Module identifier.

The mobile station shall set this field to the length, in units of octets, of its Extended User Identity Module identifier. If the mobile station does not have an Extended User Identity Module identifier, the mobile station shall set this field to '0000'.

EXT_UIM_ID – Mobile station Extended User Identity Module identifier.

The mobile station shall set this field to its Extended User Identity Module identifier (see [40]).

RESERVED - Reserved bits for octet alignment.

The mobile station shall add the minimum number of bits necessary to make the record length in bits an integral multiple of 8. The mobile station shall set these bits to '0'.

2.7.4.45 MEID_ME

This information record can be included in a *Status Response Message* or an *Extended Status Response Message* to return the mobile station MEID_ME.

Type-Specific Field	**Length (bits)**
MEID_ME_LEN	4
MEID_ME	8 × MEID_ME_LEN
RESERVED	0 - 7 (as needed)

MEID_ME_LEN – The length of MEID_ME.

The mobile station shall set this field to the length, in units of octets, of the MEID_ME field. If the mobile station does not have an MEID_ME, the mobile station shall set this field to '0000'.

MEID_ME[16] – Mobile equipment MEID.

The mobile station shall set this field to $MEID_p$ (see 2.3.2).

RESERVED - Reserved bits for octet alignment.

The mobile station shall add the minimum number of bits necessary to make the record length in bits an integral multiple of 8. The mobile station shall set these bits to '0'.

[16] The MEID_ME field is always set to $MEID_p$ and never carries EUIM ID value.

2.7.4.46 Additional Geo-Location Capability

This information record identifies the additional geo-location capabilities of the mobile station. The mobile station shall use the following fixed-length format for the type-specific fields:

Type-Specific Field	Length (bits)
ADD_GEO_LOC_LEN	4
ADD_GEO_LOC	8 × ADD_GEO_LOC_LEN
RESERVED	4

ADD_GEO_LOC_LEN – The length of Additional Geo-location.

The mobile station shall set this field to the length, in units of octets, of the ADD_GEO_LOC field.

ADD_GEO_LOC – Additional Geo-location.

The mobile station shall set this field to indicate which geo-location capabilities are supported by the mobile station.

This field consists of the subfields shown in 2.7.4.46-1.

The mobile station shall set each subfield to ‘1’ if the corresponding capability is supported by the mobile station; otherwise, the mobile station shall set the subfield to ‘0’.

Table 2.7.4.46-1. Encoding Additional Geo-location Codes[17]

Subfield	Length (bits)	Subfield Description
QZSS	1	Support of QZSS
GLONASS	1	Support of GLONASS
Galileo	1	Support Galileo
Compass / BeiDou	1	Support of COMPASS_BEIDOU
WAAS	1	Support of WAAS
EGNOS	1	Support of EGNOS
MSAS	1	Support of MSAS
HRPD	1	Support of HRPD
UMB	1	Support of UMB
RESERVED	7	Reserved bits

RESERVED - Reserved bits for octet alignment.

The mobile station shall set these bits to ‘0’.

[17] Additional values for this field can be defined in [30].

3. REQUIREMENTS FOR BASE STATION CDMA OPERATION

This section defines requirements that are specific to CDMA base station equipment and operation.

3.1 Reserved

3.2 Reserved

3.3 Security and Identification

3.3.1 Authentication

The base station may be equipped with a database that includes unique mobile station authentication keys, shared secret data, or both for each registered mobile station in the system. This database is used for authentication of mobile stations that are equipped for authentication operation.

If the base station supports mobile station authentication, it shall provide the following capabilities: The base station shall send and receive authentication messages and perform the authentication calculations described in 2.3.12.1.

3.3.2 Encryption

If the base station supports mobile station authentication (see 3.3.1), it may also support message encryption by providing the capability to send encryption control messages and the ability to perform the operations of encryption and decryption as specified in 2.3.12.2.

3.3.3 Voice Privacy

If the base station supports mobile station authentication (see 3.3.1), it may also support voice privacy using the private long code mask, as specified in 2.3.12.3.

3.3.4 Extended-Encryption

If the base station supports mobile station authentication (see 3.3.1), it may also support Extended-Encryption for Signaling Messages and User Information as specified in 2.3.12.4.

3.3.5 Message Integrity

If the base station supports message integrity, it shall provide the message integrity capability as specified in 2.3.12.5.5.

3.4 Supervision

3.4.1 Access Channel or Enhanced Access Channel

The base station shall continually monitor each active Access Channel or Enhanced Access Channel or both. The base station should provide control in cases of overload by using either the *Access Parameters Message* or the *Enhanced Access Parameters Message*.

3.4.2 Reverse Traffic Channel

The base station shall continually monitor each active Reverse Traffic Channel to determine if the call is active. If the base station detects that the call is no longer active, the base station shall declare loss of Reverse Traffic Channel continuity (see 3.6.4).

3.5 Reserved

3.6 Layer 3 Processing

This section describes base station Layer 3 processing. It contains frequent references to the messages that flow between the base station and the mobile station. While reading this section, it may be helpful to refer to the message formats (see 2.7 and 3.7), and to the call flow examples (see Annex B and Annex C). The values for the time and numeric constants used in this section (e.g., T_{1b} and N_{4m}) are specified in Annex D.

Base station processing consists of the following types of processing:

- *Pilot and Sync Channel Processing* - During *Pilot and Sync Channel Processing*, the base station transmits the Pilot Channel and Sync Channel which the mobile station uses to acquire and synchronize to the CDMA system while the mobile station is in the *Mobile Station Initialization State*.
- *Common Channel Processing* - During *Common Channel Processing*, the base station transmits the Paging Channel and/or the Forward Common Control Channel/Broadcast Control Channel which the mobile station monitors to receive messages while the mobile station is in the *Mobile Station Idle State* and the *System Access State*.
- *Access Channel and Enhanced Access Channel Processing* - During *Access Channel and Enhanced Access Channel Processing*, the base station monitors the Access Channel and/or the Enhanced Access Channel to receive messages which the mobile station sends while the mobile station is in the *System Access State*.
- *Traffic Channel Processing* - During *Traffic Channel Processing*, the base station uses the Forward and Reverse Traffic Channels to communicate with the mobile station while the mobile station is in the *Mobile Station Control on the Traffic Channel State*.

3.6.1 Pilot and Sync Channel Processing

During *Pilot and Sync Channel Processing*, the base station transmits the Pilot and Sync Channels which the mobile station uses to acquire and synchronize to the CDMA system while the mobile station is in the *Mobile Station Initialization State*.

3.6.1.1 Preferred Set of CDMA Channels

The preferred set of frequency assignments are the CDMA Channels on which the mobile station attempts to acquire the CDMA system (see [2]).

The base station shall support at least one member of the preferred set of frequency assignments. The base station may support additional CDMA Channels.

3.6.1.2 Pilot Channel Operation

The Pilot Channel (see [2]) is a reference channel which the mobile station uses for acquisition, timing, and as a phase reference for coherent demodulation.

The base station shall continually transmit a Pilot Channel for every CDMA Channel supported by the base station, unless the base station is classified as a hopping pilot beacon.

3.6.1.3 Sync Channel Operation

The Sync Channel (see [2]) provides the mobile station with system configuration and timing information.

The base station shall transmit at most one Sync Channel for each supported CDMA Channel. The base station shall support a Sync Channel on at least one member of the preferred set of frequency assignments that it supports. The base station should support a Sync Channel on every member of the preferred set of frequency assignments that it supports.

If the base station operates in Band Class 0 or Band Class 3, and supports the Primary CDMA Channel, then the base station shall transmit a Sync Channel on the Primary CDMA Channel.

The base station shall continually send the *Sync Channel Message* on each Sync Channel that the base station transmits.

3.6.2 Common Channel Processing

3.6.2.1 Paging Channel and Forward Common Control Channel Procedures

During *Common Channel Processing*, the base station transmits the Paging Channel or the Forward Common Control Channel (see [2]) which the mobile station monitors to receive messages while the mobile station is in the *Mobile Station Idle State* and the *System Access State*.

The base station may transmit up to seven Paging Channels on each supported CDMA Channel. The base station may transmit up to seven Forward Common Control Channels and one Primary Broadcast Control Channel on each supported CDMA Channel.

For each Paging Channel that the base station transmits, the base station shall continually send valid Paging Channel messages (see 3.7.2), which may include the *Null Message* (see [4]).

The base station shall not send any message which is not completely contained within two consecutive Paging Channel or Forward Common Control Channel slots, unless the processing requirements for the message explicitly specify a different size limitation.[1]

---

[1] See, for example, [14] which specifies processing requirements for the *Data Burst Message*.

3.6.2.1.1 CDMA Channel Determination

The base station may send the *CDMA Channel List Message Extended CDMA Channel List Message* and the *Flex Duplex CDMA Channel List Message* on the Paging Channel. When the base station supports Broadcast Control Channel, the base station shall send the *Extended CDMA Channel List Message* and may send the *Flex Duplex CDMA Channel List Message* on the Primary Broadcast Control Channel.

When the base station sends a *CDMA Channel List M*essage or an *Extended CDMA Channel List Message* or a *Flex Duplex CDMA Channel List Message* on the Paging Channel or on the Primary Broadcast Control Channel, the base station shall determine the assigned band and CDMA Channel using the mobile station hashing procedures for the corresponding P_REV_IN_USE.

3.6.2.1.2 Common Channel Determination

To determine the mobile station's assigned Paging Channel or Forward Common Control Channel, the base station shall use the hash function specified in 2.6.7.1 with the following inputs:

- IMSI_S based on the IMSI with which the mobile station registered (see 2.3.1)
- Number of Paging Channels or Forward Common Control Channels which the base station transmits on the mobile station's assigned CDMA Channel.

3.6.2.1.3 Paging Slot Determination

To determine the assigned Paging Channel or Forward Common Control Channel slots for a mobile station with a given slot cycle index, the base station shall select a number PGSLOT using the hash function specified in 2.6.7.1 with the following inputs:

- IMSI_S based on the IMSI with which the mobile station registered (see 6.3.1)
- Maximum number of Paging Channel or Forward Common Control Channel slots (2048).

The assigned Paging Channel or Forward Common Control Channel slots for the mobile station are those slots for which

$$(\lfloor t/4 \rfloor - \mathrm{PGSLOT}) \bmod (16 \times T) = 0,$$

where t is the System Time in 20ms frames, and T is the slot cycle length in units of 1.28 seconds given by

$$T = 2^i,$$

where i is the slot cycle index which can take the values -4, -3, -2, -1, 0, 1, 2, 3, 4, 5, 6, and 7.

When the base station is able to determine that the mobile station is operating in the slotted mode and is able to determine the mobile station's preferred slot cycle index, the base station determines the slot cycle index to use for the mobile station as follows:

- If the base station is able to determine that the mobile station is operating in the reduced slot cycle mode, the base station uses min(reduced slot cycle index, preferred slot cycle index, maximum slot cycle index) for the mobile station's slot cycle index.
- Otherwise:
  - If the base station supports negative values of slot cycle index, the base station uses min(preferred slot cycle index, maximum slot cycle index) for the mobile station's slot cycle index.
  - Otherwise, the base station uses max(0, min(preferred slot cycle index, maximum slot cycle index)) for the mobile station's slot cycle index.

When the base station is not able to determine whether the mobile station is operating in the slotted mode, or the base station is not able to determine the mobile station's preferred slot cycle index, the base station uses for the mobile station's slot cycle index the smaller of the maximum slot cycle index and 1.

3.6.2.1.4 Message Transmission and Acknowledgment Procedures

The Paging Channel or Forward Common Control Channel acknowledgment procedures facilitate the reliable exchange of messages between the base station and the mobile station on the f-csch and r-csch. The acknowledgment procedures and requirements are described in [4].

3.6.2.2 Overhead Information

The base station sends overhead messages to provide the mobile station with the information that it needs to operate with the base station. If the base station supports the Primary Broadcast Control Channel for overhead messages and is not a pilot beacon, it shall support the Forward Common Control Channel for all other general page information.

The base station with a P_REV greater than six that supports Broadcast Control Channel shall send overhead messages on the Primary Broadcast Control Channel. The base station with a P_REV greater than six that does not support the Broadcast Control Channel shall send overhead messages on each Paging Channel. The overhead messages sent on the Primary Broadcast Control Channel are:

1. *ANSI-41 System Parameters Message*
2. *User Zone Identification Message*
3. *Private Neighbor List Message*
4. *Extended Global Service Redirection Message*
5. *Extended CDMA Channel List Message*
6. *MC-RR Parameters Message*
7. *Universal Neighbor List Message*
8. *Enhanced Access Parameters Message*

9. *ANSI-41 RAND Message*
10. *BCMC Service Parameters Message*
11. *Access Point Identification Message*
12. *Access Point Identification Text Message*
13. *Access Point Pilot Information Message*
14. *General Overhead Information Message*
15. *Flex Duplex CDMA Channel List Message*
16. *Alternative Technologies Information Message*

The overhead messages on the Paging Channel are:

1. *System Parameters Message*
2. *Neighbor List Message* (Band Class 0 only)
3. *Access Parameters Message*
4. *CDMA Channel List Message*
5. *Extended System Parameters Message*
6. *Extended Neighbor List Message* (band classes other than Band Class 0)
7. *General Neighbor List Message*
8. *Global Service Redirection Message*
9. *User Zone Identification Message*
10. *Private Neighbor List Message*
11. *Extended Global Service Redirection Message*
12. *Extended CDMA Channel List Message*
13. *BCMC Service Parameters Message*
14. *Access Point Identification Message*
15. *Access Point Identification Text Message*
16. *Access Point Pilot Information Message*
17. *General Overhead Information Message*
18. *Flex Duplex CDMA Channel List Message*
19. *Alternative Technologies Information Message*

The base station shall maintain a configuration sequence number (CONFIG_SEQ) for configuration messages transmitted on the Paging Channel, and shall increment CONFIG_SEQ modulo 64 whenever the base station modifies the following messages:

1. *System Parameters Message*
2. *Neighbor List Message* (Band Class 0 only)

3. *CDMA Channel List Message*
4. *Extended System Parameters Message*
5. *Extended Neighbor List Message* (band classes other than Band Class 0)
6. *General Neighbor List Message*
7. *Global Service Redirection Message*
8. *User Zone Identification Message*
9. *Private Neighbor List Message*
10. *Extended Global Service Redirection Message*
11. *Extended CDMA Channel List Message*
12. *Access Point Identification Message*
13. *Access Point Identification Text Message*
14. *Access Point Pilot Information Message*
15. *General Overhead Information Message*
16. *Flex Duplex CDMA Channel List Message*
17. *Alternative Technologies Information Message*

The base station shall maintain a configuration sequence number (CONFIG_SEQ) for configuration messages transmitted on the Primary Broadcast Control Channel, and shall increment CONFIG_SEQ modulo 64 whenever the base station modifies the following messages:

1. *ANSI-41 System Parameters Message*
2. *User Zone Identification Message*
3. *Private Neighbor List Message*
4. *Extended Global Service Redirection Message*
5. *Extended CDMA Channel List Message*
6. *MC-RR Parameters Message*
7. *Universal Neighbor List Message*
8. *Access Point Identification Message*
9. *Access Point Identification Text Message*
10. *Access Point Pilot Information Message*
11. *General Overhead Information Message*
12. *Flex Duplex CDMA Channel List Message*
13. *Alternative Technologies Information Message*

The base station shall maintain an access configuration sequence number (ACC_CONFIG_SEQ) for the Access Channel, and shall increment ACC_CONFIG_SEQ modulo 64 whenever the base station modifies the *Access Parameters Message*.

The base station shall maintain an access configuration sequence number (ACC_CONFIG_SEQ) for the Enhanced Access Channel, and shall increment ACC_CONFIG_SEQ modulo 64 whenever the base station modifies the *Enhanced Access Parameters Message*.

On each Primary Broadcast Control Channel which the base station transmits, the base station shall send each of the following system overhead messages at least once per T_{1b} seconds:

1. *Extended CDMA Channel List Message*
2. *ANSI-41 System Parameters Message*
3. *MC-RR Parameters Message*
4. *Enhanced Access Parameters Message*
5. *Universal Neighbor List Message*

If the base station supports Primary Broadcast Control Channels, and the base station is sending the *ANSI-41 RAND Message*, it shall send it at least once per T_{1b} seconds.

If the base station supports Primary Broadcast Control Channels, and the base station is sending the *Access Point Pilot Information Message*, it shall send it completely at least once during every 16 paging slot interval that satisfies the following:

$\lfloor SYS\_TIME_s / 16 \rfloor \bmod 2^{APPIM\_PERIOD\_INDEX} = 0$, where SYS_TIME_s is the system time in units of 80 ms.

If the base station supports Primary Broadcast Control Channels, and the base station is sending the *Access Point Identification Message*, it shall send it at least once per T_{1b} seconds.

If the base station supports Primary Broadcast Control Channels, and the base station is sending the *Access Point Identification Text Message*, it shall send it at least once per T_{1b} seconds.

If the base station supports Primary Broadcast Control Channels, and the base station is sending the *General Overhead Information Message*, it shall send it completely at least once during every 16 paging slot interval that satisfies the following:

$\lfloor SYS\_TIME_s / 16 \rfloor \bmod 2^{GEN\_OVHD\_CYCLE\_INDEX} = 0$, where SYS_TIME_s is the system time in units of 80 ms.

If the base station supports Primary Broadcast Control Channels, and the base station is sending the *Alternative Technologies Information Message*, it shall send it completely at least once during every 16 paging slot interval that satisfies the following:

$\lfloor SYS\_TIME_s / 16 \rfloor \bmod 2^{ATIM\_CYCLE\_INDEX} = 0$, where SYS_TIME_s is the system time in units of 80 ms.

If the base station supports Primary Broadcast Control Channels, and the base station is sending the *Flex Duplex CDMA Channel List Message*, it shall send it at least once per T_{1b} seconds.

On each of the Paging Channels the base station transmits, the base station shall send each of the following system overhead messages at least once per T_{1b} seconds:

1. *Access Parameters Message*
2. *CDMA Channel List Message*
3. *Extended System Parameters Message*
4. *System Parameters Message*

For the messages sent on the Paging Channel, if the base station is operating in Band Class 1, Band Class 3, or Band Class 4 and MIN_P_REV is less than seven, the base station shall send the *Extended Neighbor List Message*, and may also send the *General Neighbor List Message*. If the base station is operating in Band Class 0 and MIN_P_REV is less than seven, the base station shall send the *Neighbor List Message*, and may also send the *General Neighbor List Message*. If the base station is sending the *Neighbor List Message*, it shall send it at least once per T_{1b} seconds. If the base station is sending the *Extended Neighbor List Message*, it shall send it at least once per T_{1b} seconds. If the base station is sending the *General Neighbor List Message*, it shall send it at least once per T_{1b} seconds. If the base station is sending *Access Point Pilot Information Message*, it shall send it completely at least once during every 16 paging slot interval that satisfies the following:

$\lfloor SYS\_TIME_s / 16 \rfloor \bmod 2^{APPIM\_PERIOD\_INDEX} = 0$, where SYS_TIME_s is the system time in units of 80 ms. If the base station is sending *Access Point Identification Message and Access Point Identification Text Message*, it shall send these messages at least once per T_{1b} seconds. If the base station is sending the *General Overhead Information Message*, it shall send it completely at least once during every 16 paging slot interval that satisfies the following:

$\lfloor SYS\_TIME_s / 16 \rfloor \bmod 2^{GEN\_OVHD\_CYCLE\_INDEX} = 0$, where SYS_TIME_s is the system time in units of 80 ms. If the base station is sending the *Alternative Technologies Information Message*, it shall it shall send it completely at least once during every 16 paging slot interval that satisfies the following:

$\lfloor SYS\_TIME_s / 16 \rfloor \bmod 2^{ATIM\_CYCLE\_INDEX} = 0$,where SYS_TIME_s is the system time in units of 80 ms.

Overhead Messages sent on the Primary Broadcast Control Channel shall be transmitted on a continuous basis, consecutively.

If the base station uses addressing modes requiring use of only the IMSI_M_S, independent of values of the IMSI_M_11_12 and MCC_M, the base station shall set IMSI_T_SUPPORTED to ‘0’, MCC to ‘1111111111’, and IMSI_11_12 to ‘1111111’ in the *Extended System Parameters Message*, *MC-RR Parameters Message*, and *ANSI-41 System Parameters Message*.

If the base station sets IMSI_T_SUPPORTED to ‘1’, the base station shall not set PREF_MSID_TYPE to ‘00’ in the *Extended System Parameters Message* and *ANSI-41 System Parameters Message*.

The base station may send a *Global Service Redirection Message* on any given Paging Channel. If the message is sent, the base station shall send it at least once per T_{1b} seconds.

If P_REV is greater than or equal to six, the base station may send an *Extended Global Service Redirection Message*. If the message is sent, the base station shall send it at least once per T_{1b} seconds. The base station may send this message to redirect only those mobile stations with MOB_P_REV equal to or greater than six.

When both the *Global Service Redirection Message* and the *Extended Global Service Redirection Message* are sent, the base station shall use the *Global Service Redirection Message* for mobile stations with MOB_P_REV less than six, and shall use the *Extended Global Service Redirection Message* for mobile stations with MOB_P_REV equal to or greater than six. When only the *Global Service Redirection Message* is sent and this message is for mobile station with MOB_P_REV less then six, the base station shall set EXCL_P_REV_MS to '1'.

If only the *Global Service Redirection Message* is sent and this message is for redirecting all mobile stations, the base station shall set EXCL_P_REV_MS to '0'.

The base station may send a *User Zone Identification Message*. If the message is sent, the base station shall send it at least once per T_{1b} seconds.

The base station may send a *Private Neighbor List Message*. If the message is sent, the base station shall send it at least once per T_{1b} seconds.

The base station may send an *Extended CDMA Channel List Message*. If the message is sent, the base station shall send it at least once per T_{1b} seconds.

The base station may send a *Flex Duplex CDMA Channel List Message*. If the message is sent, the base station shall send it at least once per T_{1b} seconds.

3.6.2.3 Mobile Station Directed Messages

The base station may send the following messages directed to a mobile station on the f-csch. If the base station sends a message, the base station shall comply with the specified requirements for sending the message, if any:

1. *Abbreviated Alert Order*
2. *Audit Order*
3. *Authentication Challenge Message*
4. *Base Station Challenge Confirmation Order*
5. *Channel Assignment Message* (if P_REV_IN_USE < eight)
6. *Data Burst Message*
7. *Extended Channel Assignment Message*
8. *Fast Call Setup Order*
9. *Feature Notification Message*

10. *General Page Message*
11. *Intercept Order*
12. *Local Control Order*
13. *Lock Until Power-Cycled Order*
14. *Maintenance Required Order*
15. *PACA Message*
16. *Registration Accepted Order*
17. *Registration Rejected Order*
18. *Registration Request Order*
19. *Release Order*
20. *Reorder Order*
21. *Retry Order*
22. *Security Mode Command Message*
23. *Service Redirection Message*
24. *Slotted Mode Order*
25. *SSD Update Message*
26. *Status Request Message*
27. *TMSI Assignment Message*
28. *Universal Page Message* (Forward Common Control Channel Only)
29. *Unlock Order*
30. *User Zone Reject Message*
31. *General Extension Message*

The base station shall not send the *Channel Assignment Message* if P_REV_IN_USE is greater than or equal to nine.

The base station should send at least one *General Page Message* in each Paging Channel slot. The base station shall not omit a *General Page Message* in two adjacent Paging Channel slots.

The base station should send at least one *General Page Message* or *Universal Page Message* in each Forward Common Control Channel slot. The base station shall not omit both a *General Page Message* and a *Universal Page Message* in two adjacent slots.

3.6.2.3.1 Processing when the General Page Message is Used

The base station shall use the following rules for selecting the Paging Channel or Forward Common Control Channel slot in which to send a message to a mobile station:

- If the base station is able to determine that the mobile station is operating in the non-slotted mode, the base station may send the message to the mobile station in any Paging Channel or Forward Common Control Channel slot.
- If the base station is able to determine that the mobile station is operating in the slotted mode and is able to determine the mobile station's slot cycle index (see 2.6.2.1.1.3), the base station shall send the message at least once in an assigned Paging Channel slot for the mobile station (see 3.6.2.1.3), with the position within the slot subject to the following limitations:
  - If the mobile station has registered with a class 0 IMSI, the base station shall not send the message in the assigned Paging Channel slot after sending a *General Page Message* with CLASS_0_DONE set to '1' in that slot.
  - If the mobile station has registered with a class 1 IMSI, the base station shall not send the message in the assigned Paging Channel slot after sending a *General Page Message* with CLASS_1_DONE set to '1' in that slot.
  - If the mobile station has been assigned a TMSI, the base station shall not send the message in the assigned Paging Channel slot after sending a *General Page Message* with TMSI_DONE set to '1' in that slot.
- If the base station is able to determine that the mobile station is operating in the slotted mode and that the mobile station is not waiting for a priority access channel assignment and that the slotted timer in the mobile station is not active, and the base station is able to determine the mobile station's slot cycle index (see 2.6.2.1.1.3), the base station shall send the message at least once in an assigned Forward Common Control Channel slot for the mobile station (see 3.6.2.1.3), with the position within the slot subject to the following limitations:
  - If the mobile station has registered with a class 0 IMSI, the base station shall not send the message in the assigned Forward Common Control Channel slot after sending a *General Page Message* with CLASS_0_DONE set to '1' in that slot.
  - If the mobile station has registered with a class 1 IMSI, the base station shall not send the message in the assigned Forward Common Control Channel slot after sending a *General Page Message* with CLASS_1_DONE set to '1' in that slot.
  - If the mobile station has been assigned a TMSI, the base station shall not send the message in the assigned Forward Common Control Channel slot after sending a *General Page Message* with TMSI_DONE set to '1' in that slot.
- If the base station is able to determine that the mobile station is operating in the slotted mode and that the mobile station is waiting for a priority access channel assignment, or that the slotted timer in the mobile station is active, the base station may send the message to the mobile station in any Forward Common Control Channel slot with the position within the slot subject to the following limitation:

- If the mobile station has registered with a class 0 IMSI, the base station shall not send the message in any Forward Common Control Channel slot after sending a *General Page Message* with CLASS_0_DONE set to '1' in that slot.
- If the mobile station has registered with a class 1 IMSI, the base station shall not send the message in any Forward Common Control Channel slot after sending a *General Page Message* with CLASS_1_DONE set to '1' in that slot.
- If the mobile station has been assigned a TMSI, the base station shall not send the message in any Forward Common Control Channel slot after sending a *General Page Message* with TMSI_DONE set to '1' in that slot.

• If the base station is not able to determine whether the mobile station is operating in the non-slotted mode, or the base station is not able to determine the mobile station's slot cycle index, the base station shall assume that the mobile station is operating in the slotted mode with a slot cycle index which is the smaller of MAX_SLOT_CYCLE_INDEX and 1. The base station shall send the message at least once in an assigned Paging Channel or Forward Common Control Channel slot for the mobile station (see 3.6.2.1.3), with the position within the slot subject to the following limitations:

- If the mobile station has registered with a class 0 IMSI, the base station shall not send the message in the assigned Paging Channel or Forward Common Control Channel slot after sending a *General Page Message* with CLASS_0_DONE set to '1' in that slot.
- If the mobile station has registered with a class 1 IMSI, the base station shall not send the message in the assigned Paging Channel or Forward Common Control Channel slot after sending a *General Page Message* with CLASS_1_DONE set to '1' in that slot.
- If the mobile station has been assigned a TMSI, the base station shall not send the message in the assigned Paging Channel or Forward Common Control Channel slot after sending a *General Page Message* with TMSI_DONE set to '1' in that slot.

The base station should send messages directed to mobile stations operating in the slotted mode as the first messages in the slot.

If the base station sends a *General Page Message* with ORDERED_TMSIS set to '1' in a slot, the base station shall order page records with PAGE_CLASS equal to '10' in ascending order such that if a particular TMSI_CODE value for one page record is greater than the TMSI_CODE value for another page record, the page record with the greater TMSI_CODE value is sent later in the slot.

3.6.2.3.2 Processing when the Universal Page Message is Used

The base station shall use the following rules for selecting the Forward Common Control Channel slot in which to send a message to a mobile station:

- If the base station is able to determine that the mobile station is operating in the non-slotted mode, the base station may send the message to the mobile station in any Forward Common Control Channel slot.
- If the base station is able to determine that the mobile station is capable of operating in the slotted mode and that the mobile station is waiting for a priority access channel assignment, or that the slotted timer in the mobile station is active, the base station may send the message to the mobile station in any Forward Common Control Channel slot with the position within the slot subject to the following limitation:
  - The base station shall not send the message later in the slot than a *Universal Page Message* which lacks a mobile station-directed message announcement and which lacks a mobile station-addressed page (see 3.7.2.3.2.36) for that mobile station.
- If the base station is able to determine that the mobile station is operating in the slotted mode and that the mobile station is not waiting for a priority access channel assignment and that the slotted timer in the mobile station is not active and the base station is able to determine the mobile station's slot cycle index (see 2.6.2.1.1.3.3), the base station shall send the message at least once in an assigned Forward Common Control Channel slot for the mobile station (see 3.6.2.1.3) or in the following slot, with the position within these two slots subject to the following limitation:
  - The base station shall not send the message later in the slot than a *Universal Page Message* that lacks a mobile station-directed message announcement and which lacks a mobile station-addressed page (see 3.7.2.3.2.36) for that mobile station.
- If the base station is not able to determine whether the mobile station is operating in the non-slotted mode, or the base station is not able to determine the mobile station's slot cycle index, the base station shall assume that the mobile station is operating in the slotted mode with a slot cycle index which is the smaller of MAX_SLOT_CYCLE_INDEX and 1. The base station shall send the message at least once in an assigned Forward Common Control Channel slot for the mobile station (see 3.6.2.1.3), or in the following slot, with the position within these two slots subject to the following limitation:
  - The base station shall not send the message later in the slot than a *Universal Page Message* that lacks a mobile station-directed message announcement and which lacks a mobile station-addressed page (see 3.7.2.3.2.36) for that mobile station.

The base station should send messages directed to both mobile stations operating in the slotted mode and mobile stations operating in the non-slotted mode later in the slot than the *Universal Page Message*.

3.6.2.4 Broadcast Messages

3.6.2.4.1 Broadcast Messages Sent on the Paging Channel

The base station may transmit *Data Burst Messages* directed to broadcast addresses. When transmitting broadcast messages that are to be received by mobile stations operating in the slotted mode, the base station may use broadcast page records (see 3.7.2.3.2.17) in accordance with the broadcast procedures specified in 3.6.2.4.1 to announce the presence of broadcast *Data Burst Messages* on the Paging Channel. The base station should use the rules specified in 3.6.2.4.1.1 for selecting the Paging Channel slot in which to send a broadcast *Data Burst Message*.

3.6.2.4.1.1 Broadcast Procedures for Slotted Mode

The base station may announce the presence of broadcast *Data Burst Messages* on the Paging Channel by paging, using a broadcast address with PAGE_CLASS equal to '11' and PAGE_SUBCLASS equal to '00'.

3.6.2.4.1.1.1 General Overview

The base station may transmit *Data Burst Messages* directed to broadcast addresses. Since mobile stations operating in slotted mode do not constantly monitor a Paging Channel, it is necessary to use special procedures to ensure that mobile stations operating in the slotted mode are able to receive the message. The base station may either send a broadcast message in many slots, or may send a broadcast message in a predetermined paging slot. This single transmission of the pending broadcast message may be announced by a preceding "broadcast page". A broadcast page is a *General Page Message* record with the PAGE_CLASS field set to '11'.

If pending transmission of the broadcast message is announced by the broadcast page, mobile stations use the BC_ADDR and the BURST_TYPE fields of the broadcast page record to determine whether or not to receive the announced broadcast message. The base station sets the value of the BC_ADDR according to the requirements of the standards related to the BURST_TYPE. There is a predetermined timing relationship between the sending of the broadcast page and the sending of the related broadcast message. This timing relationship allows mobile stations to determine which slot to monitor in order to receive the broadcast message.

To reduce the overhead for sending broadcast pages or broadcast messages, a base station may use periodic broadcast paging (see 3.6.2.4.1.1.2.1.2). When periodic broadcast paging is enabled, broadcast pages or broadcast messages are sent only once during a broadcast paging cycle. Mobile stations that are operating in the slotted mode and are configured to receive broadcast messages monitor the paging channel during the slot in which the broadcast pages or broadcast messages are sent. For the purpose of periodic broadcast paging, system time is divided into broadcast paging cycles, each having a duration of (**B** + 3) Paging Channel slots, where **B** is a power of two. In each broadcast paging cycle, the first paging slot may contain broadcast pages or broadcast messages.

3.6.2.4.1.1.2 Requirements for Sending Broadcast Messages

3.6.2.4.1.1.2.1 Broadcast Delivery Options

When transmitting broadcast messages that are to be received by mobile stations operating in the slotted mode and monitoring the Paging Channel, the base station shall use one of the two following procedures to transmit a broadcast message.

3.6.2.4.1.1.2.1.1 Method 1: Multi-Slot Broadcast Message Transmission

The base station may send a broadcast message using this method without regard to whether periodic broadcast paging is enabled or disabled (see 3.6.2.4.1.1.2.3).

When using this method, the base station shall send the broadcast message in a sufficient number of paging slots such that it may be received by any mobile station that is operating in the slotted mode. For example, the base station may send the broadcast message in **M** successive paging slots where **M** is the number of slots in a maximum paging cycle as defined in 2.6.2.1.1.3.3.

3.6.2.4.1.1.2.1.2 Method 2: Periodic Broadcast Paging

If the base station sends a broadcast message using this method, then the base station shall enable periodic broadcast paging (see 3.6.2.4.1.1.2.3).

To deliver a broadcast message using this method, the base station should perform the following:

- If the number and size of the broadcast messages waiting to be sent are such that the messages can be sent in a single slot, the base station should send the broadcast messages in the first slot of the next broadcast paging cycle (see 2.6.2.1.1.3.3).
- If there is a single broadcast message waiting to be sent, the base station should send the broadcast message beginning in the first slot of the next broadcast paging cycle (see 2.6.2.1.1.3.3).
- Otherwise, the base station should first include a broadcast page for each broadcast message to be sent, in a *General Page Message* that is sent in the first slot of the next broadcast paging cycle (see 2.6.2.1.1.3.3). The base station should then send the related broadcast messages in the paging slots specified in 3.6.2.4.1.1.2.4.

3.6.2.4.1.1.2.2 Duplicate Broadcast Message Transmission

If the base station sends a broadcast message or a broadcast page and an associated broadcast message more than once when periodic broadcast paging is enabled (see 3.6.2.4.1.1.2.3), then all repetitions of the broadcast message or the broadcast page and the associated broadcast message should be sent within 4 × (**B** + 3) paging slots of the paging slot in which the broadcast message or broadcast page was first sent. (**B** + 3 is the duration of the broadcast paging cycle as defined in 2.6.2.1.1.3.3).

When a base station sends a broadcast message or a broadcast page when periodic broadcast paging is enabled (see 3.6.2.4.1.1.2.3), and the base station has a second, different broadcast message to send which contains identical BURST_TYPE and BC_ADDR fields, then the base station shall wait 4 × (**B** + 3) paging slots after the first slot of the broadcast paging cycle containing the final sending of the first broadcast message or broadcast page before sending the second, different broadcast message or related broadcast page.

3.6.2.4.1.1.2.3 Periodic Broadcast Paging

The base station uses the BCAST_INDEX field of the *Extended System Parameters Message* to specify the current state of periodic broadcast paging to all mobile stations.

To enable periodic broadcast paging, the base station shall set the BCAST_INDEX field of the *Extended System Parameters Message* to an unsigned 3-bit number in the range 1-7, equal to the broadcast slot cycle index as defined in 2.6.2.1.1.3.3. The value of the BCAST_INDEX field may exceed the value of the MAX_SLOT_CYCLE_INDEX field sent in the *System Parameters Message*.

To indicate that periodic broadcast paging is either disabled or is not supported by the base station, the base station shall set the BCAST_INDEX field to '000'.

3.6.2.4.1.1.2.4 Broadcast Message Slot Determination

When a base station uses broadcast paging, it shall determine the slot in which to send the corresponding broadcast message using the following procedures:

- The base station shall consider a broadcast page to have been sent in the paging slot in which the *General Page Message* containing the broadcast page began.
- The reference slot is defined as the paging slot in which the broadcast page was sent.
- Let n represent the ordinal number of the broadcast page relative to other broadcast pages that are contained in the same *General Page Message* (n = 1, 2, 3,...). The base station shall send the broadcast message announced by broadcast page n in the paging slot that occurs n × 3 paging slots after the reference slot.

3.6.2.4.2 Broadcast Messages Sent on the Broadcast Control Channel

The base station may transmit *Data Burst Messages* directed to broadcast addresses when $NUM\_BCCH\_BCAST_S$ does not equal '000'. When transmitting broadcast messages that are to be received by mobile stations operating in the slotted mode, the base station may use enhanced broadcast pages (see 3.7.2.3.2.17 and 3.7.2.3.2.36) in accordance with the broadcast procedures specified in 3.6.2.4.2 to announce the presence of broadcast *Data Burst Messages* on the Broadcast Control Channel. The base station should use the rules specified in 3.6.2.4.2.1 for selecting the Broadcast Control Channel slot in which to send a broadcast *Data Burst Message*.

3.6.2.4.2.1 Broadcast Procedures for Slotted Mode

The base station may announce the presence of broadcast *Data Burst Message*s on the Broadcast Control Channel by sending an enhanced broadcast page.

3.6.2.4.2.1.1 General Overview

The base station may transmit *Data Burst Message*s directed to broadcast addresses. Since mobile stations operating in slotted mode do not constantly monitor a Broadcast Control Channel, it is necessary to use special procedures to ensure that mobile stations operating in the slotted mode are able to receive the message. The base station may either send an enhanced broadcast page in many Forward Common Control Channel slots, directing the mobile station to the appropriate Broadcast Control Channel slot, or the base station may also send an enhanced broadcast page in a predetermined slot, called a broadcast slot, on the Forward Common Control Channel, directing the mobile station to a specified Broadcast Control Channel slot.

If pending transmission of the broadcast message is announced by the enhanced broadcast page, mobile stations use the BC_ADDR and the BURST_TYPE fields of the enhanced broadcast page record to determine whether or not to receive the announced broadcast message. The base station sets the value of the BC_ADDR according to the requirements of the standards related to the BURST_TYPE. The timing relationship between the sending of the enhanced broadcast page and the sending of the related broadcast message is specified in the enhanced broadcast page. This timing relationship allows mobile stations to determine which Broadcast Control Channel slot to monitor in order to receive the broadcast message.

To reduce the overhead for sending broadcast pages or broadcast messages, a base station may use Periodic Enhanced Broadcast Paging (see 3.6.2.4.2.1.2.1.2). When Periodic Enhanced Broadcast Paging is enabled, enhanced broadcast pages are sent only once during a broadcast paging cycle. Mobile stations that are operating in the slotted mode and are configured to receive broadcast messages monitor the Forward Common Control Channel during the broadcast slot in which the enhanced broadcast pages are sent. For the purpose of Periodic Enhanced Broadcast Paging, system time is divided into broadcast paging cycles, each having a duration of (**B** + 7) Forward Common Control Channel slots, where **B** is a power of two. In each broadcast paging cycle, the first Forward Common Control Channel slot may contain enhanced broadcast pages.

3.6.2.4.2.1.2 Requirements for Sending Broadcast Messages

3.6.2.4.2.1.2.1 Broadcast Delivery Options

When transmitting broadcast messages that are to be received by mobile stations operating in the slotted mode and monitoring the Forward Common Control Channel/Broadcast Control Channel, the base station shall use one of the two following procedures to transmit a broadcast message.

3.6.2.4.2.1.2.1.1 Method 1: Multi-Slot Enhanced Broadcast Paging

The base station may send a broadcast message using this method without regard to whether Periodic Enhanced Broadcast Paging is enabled or disabled (see 3.6.2.4.2.1.2.3).

When using this method, the base station shall send the enhanced broadcast page in a sufficient number of Forward Common Control Channel slots such that it may be received by any mobile station that is operating in the slotted mode. The enhanced broadcast page then directs mobile stations to a subsequent Broadcast Control Channel slot.

The base station shall not send an enhanced broadcast page that directs a mobile station to receive a broadcast message on the Primary Broadcast Control Channel.

The base station shall not send a broadcast message on the Forward Common Control Channel.

3.6.2.4.2.1.2.1.2 Method 2: Periodic Enhanced Broadcast Paging

If the base station sends a broadcast message using this method, then the base station shall enable Periodic Enhanced Broadcast Paging (see 3.6.2.4.2.1.2.3).

To deliver a broadcast message using this method, the base station should perform the following:

- The base station should first include an enhanced broadcast page for each broadcast message to be sent, in a page that is sent on the Forward Common Control Channel in the first slot of the next broadcast paging cycle (see 2.6.2.1.1.3.3). The base station should then send the corresponding broadcast messages in the Broadcast Control Channel slots specified in 3.6.2.4.2.1.2.4.

The base station shall not send an enhanced broadcast page that directs a mobile station to receive a broadcast message on the Primary Broadcast Control Channel.

The base station shall not send a broadcast message on the Forward Common Control Channel.

3.6.2.4.2.1.2.2 Duplicate Broadcast Message Transmission

If the base station sends an enhanced broadcast page and an associated broadcast message more than once when Periodic Enhanced Broadcast Paging is enabled (see 3.6.2.4.2.1.2.3), then all repetitions of the enhanced broadcast page should be sent within $4 \times (\mathbf{B} + 7)$ slots of the slot in which the enhanced broadcast page was first sent. ($\mathbf{B} + 7$ is the duration of the broadcast paging cycle as defined in 2.6.2.1.1.3.3).

When a base station sends an enhanced broadcast page when Periodic Enhanced Broadcast Paging is enabled (see 3.6.2.4.2.1.2.3), and the base station has a second, different broadcast message to send which contains identical BURST_TYPE and BC_ADDR fields, then the base station shall wait 4 × (**B** + 7) paging slots after the first slot of the broadcast paging cycle containing the final sending of the first broadcast message or enhanced broadcast page before sending the second, different enhanced broadcast page.

3.6.2.4.2.1.2.3 Periodic Enhanced Broadcast Paging

The base station uses the BCAST_INDEX fields of the *MC-RR Parameters Message* to specify the current state of Periodic Enhanced Broadcast Paging to all mobile stations.

To enable Periodic Enhanced Broadcast Paging, the base station shall set the BCAST_INDEX field to a non-zero unsigned 3-bit number equal to the broadcast slot cycle index as defined in 2.6.2.1.1.3.3.

To indicate that Periodic Enhanced Broadcast Paging is either disabled or is not supported by the base station, the base station shall set the BCAST_INDEX field to '000'.

3.6.2.4.2.1.2.4 Broadcast Message Slot Determination

When a base station uses broadcast message announcement, it shall determine the slot in which to send the corresponding broadcast message using the following procedures:

- The base station shall consider an enhanced broadcast page to have been sent in the Forward Common Control Channel slot in which the page message containing the enhanced broadcast page began.
- The reference slot is defined as the Forward Common Control Channel slot in which the enhanced broadcast page was sent.
- The base station shall send a first transmission of the broadcast message announced by the enhanced broadcast page in the Broadcast Control Channel slot which begins 40 ms × (1 + TIME_OFFSET) later than the beginning of the slot in which the page message containing the enhanced broadcast page began. The base station may send a repetition of the broadcast message announced by the enhanced broadcast page in the Broadcast Control Channel slot which begins 40 ms × (1 + REPEAT_TIME_OFFSET) later than the Broadcast Control Channel slot in which the first transmission began.

3.6.2.4.3 Broadcast Messages Sent on the Forward Common Control Channel

The Forward Common Control Channel is used for transmission of broadcast messages only when there is not a secondary Broadcast Control Channel allocated, i.e., NUM_BCCH_BCAST equals '000'. The base station may transmit *Data Burst Messages* directed to broadcast addresses. When transmitting broadcast messages that are to be received by mobile stations operating in the slotted mode, the base station may use enhanced broadcast page records (see 3.7.2.3.2.17 and 3.7.2.3.2.36) in accordance with the broadcast procedures specified in 3.6.2.4.3 to announce the presence of broadcast *Data Burst Messages* on the Forward Common Control Channel. The base station shall send the broadcast messages on the Forward Common Control Channel where the enhanced broadcast page is sent. The base station should use the rules specified in 3.6.2.4.3.1 for selecting the Forward Common Control Channel slot in which to send a broadcast *Data Burst Message.*

3.6.2.4.3.1 Broadcast Procedures for Slotted Mode

The base station may announce the presence of broadcast *Data Burst Messages* on the Forward Common Control Channel by sending an enhanced broadcast page.

3.6.2.4.3.1.1 General Overview

The base station may transmit *Data Burst Messages* directed to broadcast addresses. Since mobile stations operating in slotted mode do not constantly monitor a Forward Common Control Channel, it is necessary to use special procedures to ensure that mobile stations operating in the slotted mode are able to receive the message. The base station may either send a broadcast message in many Forward Common Control Channel slots, or may send a broadcast message in a predetermined Forward Common Control slot. This single transmission of the pending broadcast message may be announced by a preceding "enhanced broadcast page".

If pending transmission of the broadcast message is announced by the enhanced broadcast page, mobile stations use the BC_ADDR and the BURST_TYPE fields of the enhanced broadcast page record to determine whether or not to receive the announced broadcast message. The base station sets the value of the BC_ADDR according to the requirements of the standards related to the BURST_TYPE. There is a predetermined timing relationship between the sending of the enhanced broadcast page and the sending of the related broadcast message. This timing relationship allows mobile stations to determine which Forward Common Control Channel slot to monitor in order to receive the broadcast message.

To reduce the overhead for sending enhanced broadcast pages or broadcast messages, a base station may use periodic enhanced broadcast paging (see 3.6.2.4.3.1.2.1.2). When periodic enhanced broadcast paging is enabled, enhanced broadcast pages or broadcast messages are sent only once during a broadcast paging cycle. Mobile stations that are operating in the slotted mode and are configured to receive broadcast messages monitor the Forward Common Control Channel during the Forward Common Control Channel slot in which the enhanced broadcast pages or broadcast messages are sent. For the purpose of periodic enhanced broadcast paging, system time is divided into broadcast paging

cycles, each having a duration of (**B** + 7) Forward Common Control Channel slots, where **B** is a power of two. In each broadcast paging cycle, the first Forward Common Control Channel slot may contain enhanced broadcast pages or broadcast messages.

3.6.2.4.3.1.2 Requirements for Sending Broadcast Messages

3.6.2.4.3.1.2.1 Broadcast Delivery Options

When transmitting broadcast messages that are to be received by mobile stations operating in the slotted mode and monitoring the Forward Common Control Channel, the base station shall use one of the two following procedures to transmit a broadcast message.

3.6.2.4.3.1.2.1.1 Method 1: Multi-Slot Broadcast Message Transmission

The base station may send a broadcast message using this method without regard to whether periodic enhanced broadcast paging is enabled or disabled (see 3.6.2.4.3.1.2.3).

When using this method, the base station shall send the broadcast message in a sufficient number of Forward Common Control Channel slots such that it may be received by any mobile station that is operating in the slotted mode. For example, the base station may send the broadcast message in **M** successive paging slots where **M** is the number of slots in a maximum paging cycle as defined in 2.6.2.1.1.3.3.

3.6.2.4.3.1.2.1.2 Method 2: Periodic Enhanced Broadcast Paging

If the base station sends a broadcast message using this method, then the base station shall enable periodic enhanced broadcast paging (see 3.6.2.4.3.1.2.3).

To deliver a broadcast message using this method, the base station should perform the following:

- If the number and size of the broadcast messages waiting to be sent are such that the messages can be sent in a single slot, the base station should send the broadcast messages in the first slot of the next broadcast paging cycle (see 2.6.2.1.1.3.3).
- If there is a single broadcast message waiting to be sent, the base station should send the broadcast message beginning in the first slot of the next broadcast paging cycle (see 2.6.2.1.1.3.3).
- Otherwise, the base station should first include an enhanced broadcast page for each broadcast message to be sent, in a *General Page Message* or a *Universal Page Message* that is sent in the first slot of the next broadcast paging cycle (see 2.6.2.1.1.3.3). The base station should then send the related broadcast messages in the Forward Common Control Channel slots specified in 3.6.2.4.3.1.2.4.

3.6.2.4.3.1.2.2 Duplicate Broadcast Message Transmission

If the base station sends a broadcast message or an enhanced broadcast page and an associated broadcast message more than once when periodic enhanced broadcast paging is enabled (see 3.6.2.4.3.1.2.3), then all repetitions of the broadcast message or the

enhanced broadcast page and the associated broadcast message should be sent within 4 × (**B** + 7) slots of the Forward Common Control Channel slot in which the broadcast message or enhanced broadcast page was first sent. (**B** + 7) is the duration of the broadcast paging cycle as defined in 2.6.2.1.1.3.3).

When a base station sends a broadcast message or an enhanced broadcast page when periodic enhanced broadcast paging is enabled (see 3.6.2.4.3.1.2.3), and the base station has a second, different broadcast message to send which contains identical BURST_TYPE and BC_ADDR fields, then the base station shall wait 4 × (**B** + 7) Forward Common Control Channel slots after the first slot of the enhanced broadcast paging cycle containing the final sending of the first broadcast message or enhanced broadcast page before sending the second, different broadcast message or related enhanced broadcast page.

3.6.2.4.3.1.2.3 Periodic Enhanced Broadcast Paging

The base station uses the BCAST_INDEX field of the *MC-RR Parameters Message* to specify the current state of periodic enhanced broadcast paging to all mobile stations.

To enable periodic enhanced broadcast paging, the base station shall set the BCAST_INDEX field of the *MC-RR Parameters Message* to an unsigned 3-bit number in the range 1-7, equal to the broadcast slot cycle index as defined in 2.6.2.1.1.3.3. The value of the BCAST_INDEX field may exceed the value of the MAX_SLOT_CYCLE_INDEX field sent in the *System Parameters Message*.

To indicate that periodic enhanced broadcast paging is either disabled or is not supported by the base station, the base station shall set the BCAST_INDEX field to '000'.

3.6.2.4.3.1.2.4 Broadcast Message Slot Determination

When a base station uses enhanced broadcast paging, it shall determine the slot in which to send the corresponding broadcast message using the following procedures:

- The base station shall consider an enhanced broadcast page to have been sent in the Forward Common Control Channel slot in which the *General Page Message* or the *Universal Page Message* containing the enhanced broadcast page began.
- The reference slot is defined as the Forward Common Control Channel slot in which the enhanced broadcast page was sent.
- The base station shall send a first transmission of the broadcast message announced by the enhanced broadcast page in the Forward Common Control Channel slot which begins 40 ms × (1 + TIME_OFFSET) later than the beginning of the slot in which the page message containing the enhanced broadcast page began. The base station may send a repetition of the broadcast message announced by the enhanced broadcast page in the Forward Common Control Channel slot which begins 40 ms × (1 + REPEAT_TIME_OFFSET) later than the Forward Common Control Channel slot in which the first transmission began.

3.6.2.5 Quick Paging Channel Processing

The base station may support a Quick Paging Channel. The base station may transmit up to three Quick Paging Channels on each supported CDMA Channel.

When a Quick Paging Channel is supported, the base station shall transmit paging indicators to the mobile station in the assigned positions in the assigned Quick Paging Channel slot. The base station shall set the paging indicators to “ON” if the mobile station is operating in the slotted mode and is to receive the Paging Channel or Forward Common Control Channel in the assigned Paging Channel or Forward Common Control Channel slot following its assigned Quick Paging Channel slot.

When the base station changes CONFIG_MSG_SEQ, the base station should set the paging indicators for all mobile stations to “ON” for each Quick Paging Channel slot for a time interval T (in units of 1.28 seconds), such that

$$T = N \times 2^{MAX\_SLOT\_CYCLE\_INDEX},$$

where N is an integer greater than or equal to one.

If the base station supports configuration change indicators on the Quick Paging Channel, when the base station changes CONFIG_MSG_SEQ, the base station shall set all configuration change indicators to “ON” for each Quick Paging Channel slot for a time interval of T_{31m} seconds. At all other times, the base station shall set all configuration change indicators to “OFF”.

If the base station does not support configuration change indicators on the Quick Paging Channel, then the base station shall set all configuration change indicators to “OFF”.

When the base station sends a broadcast message using Multi-Slot Broadcast Message Transmission (see 3.6.2.4.1.1.2.1.1), the base station should set all paging indicators to “ON” for the Quick Paging Channel slot which begins 100 ms prior to the beginning of the Paging Channel slot in which the broadcast message begins.

When the base station sends an enhanced broadcast page using Multi-Slot Enhanced Broadcast Paging (see 3.6.2.4.2.1.2.1.1), the base station should set all paging indicators to “ON” for the Quick Paging Channel slot which begins 100 ms prior to the beginning of the Forward Common Control Channel slot in which the message containing the enhanced broadcast page begins.

When the base station sends an enhanced broadcast page using Periodic Enhanced Broadcast Paging (see 3.6.2.4.2.1.2.1.2), the base station should set all broadcast indicators to “ON” for the Quick Paging Channel broadcast slot which begins 100 ms prior to the beginning of the Forward Common Control Channel slot in which the message containing the enhanced broadcast page begins. At all other times, the base station shall set all broadcast indicators for a Quick Paging Channel broadcast slot to “OFF”.

When the base station sends a broadcast page using Periodic Broadcast Paging (see 3.6.2.4.1.1.2.1.2), the base station should set all broadcast indicators to “ON” for the Quick Paging Channel broadcast slot which begins 100 ms prior to the beginning of the Paging Channel slot in which the message containing the broadcast page begins. At all other times, the base station shall set all broadcast indicators for a Quick Paging Channel broadcast slot to “OFF”.

The base station shall set all reserved indicators to “OFF”.

3.6.2.5.1 Quick Paging Channel Determination

To determine the mobile station's assigned Quick Paging Channel, the base station shall use the hash function specified in 2.6.7.1 with the following inputs:

- IMSI_S based on the IMSI with which the mobile station registered (see 2.3.1)
- Number of Quick Paging Channels which the base station transmits on the mobile station's assigned CDMA Channel.

3.6.2.5.2 Quick Paging Channel Slot Determination

The mobile station's assigned Quick Paging Channel slots are those slots for which

$$(\lfloor (t+5)/4 \rfloor - PGSLOT) \bmod (16 \times T) = 0,$$

where t is the System Time in 20ms frames, PGSLOT is selected in the range 0 to 2047 by using the hash function specified in 2.6.7.1, and T is the slot cycle length in units of 1.28 seconds such that

$$T = 2^i,$$

and i is the slot cycle index which can take the values -4, -3, -2, -1, 0, 1, 2, 3, 4, 5, 6, and 7.

3.6.2.5.3 Paging Indicator Position Determination

To determine the mobile station's assigned paging indicators, the base station shall use the same formula as used by the mobile station (see 2.6.2.1.2.2).

3.6.2.5.4 Configuration Change Indicator Position Determination

Configuration change indicators are transmitted on the first Quick Paging Channel.

If the Quick Paging Channel data rate is 2400 bps (indicator rate is 4800 bps), the bit positions of the first pair of configuration change indicators in a Quick Paging Channel slot shall be the last two bits in the first 40 ms half of the Quick Paging Channel slot. The bit positions of the second pair of configuration change indicators in a Quick Paging Channel slot shall be the last two bits in the Quick Paging Channel slot.

If the Quick Paging Channel data rate is 4800 bps (indicator rate is 9600 bps), the bit positions of the first four configuration change indicators in a Quick Paging Channel slot shall be the last four bits in the first 40 ms half of the Quick Paging Channel slot. The bit position of the second four configuration change indicators in a Quick Paging Channel slot shall be the last four bits in the Quick Paging Channel slot.

3.6.2.5.5 Broadcast Indicator Position Determination

Broadcast indicators are transmitted on the first Quick Paging Channel.

On the first Quick Paging Channel, if the Quick Paging Channel data rate is 2400 bps (indicator rate is 4800 bps), the broadcast indicator positions are described as follows:

- The two Quick Paging Channel bit positions prior to the last two bits in the first 40 ms half of a Quick Paging Channel broadcast slot are broadcast indicators. The

two Quick Paging Channel bit positions prior to the last two bits in a Quick Paging Channel broadcast slot are also broadcast indicators.

On the first Quick Paging Channel, if the Quick Paging Channel data rate is 4800 bps (indicator rate is 9600 bps), the broadcast indicator positions are described as follows:

- The four Quick Paging Channel bit positions prior to the last four bits in the first 40 ms half of a Quick Paging Channel broadcast slot are broadcast indicators. The four Quick Paging Channel bit positions prior to the last four bits in a Quick Paging Channel broadcast slot are also broadcast indicators.

3.6.2.5.6 Reserved Indicator Positions

On the first Quick Paging Channel, if the Quick Paging Channel data rate is 2400 bps (indicator rate is 4800 bps), the reserved indicator positions are described as follows:

- The two Quick Paging Channel bit positions prior to the last two bits in the first 40 ms half of a Quick Paging Channel slot that is not a Quick Paging Channel Broadcast slot are reserved. The two Quick Paging Channel bit positions prior to the last two bits in a Quick Paging Channel slot that is not a Quick Paging Channel Broadcast slot are also reserved.

On the first Quick Paging Channel, if the Quick Paging Channel data rate is 4800 bps (indicator rate is 9600 bps), the reserved indicator positions are described as follows:

- The four Quick Paging Channel bit positions prior to the last four bits in the first 40 ms half of a Quick Paging Channel slot that is not a Quick Paging Channel Broadcast slot are reserved. The four Quick Paging Channel bit positions prior to the last four bits in a Quick Paging Channel slot that is not a Quick Paging Channel Broadcast slot are also reserved.

On Quick Paging Channels other than the first Quick Paging Channel, if the Quick Paging Channel data rate is 2400 bps (indicator rate is 4800 bps), the reserved indicator positions are described as follows:

- The last four Quick Paging Channel bit positions in the first 40 ms half of a Quick Paging Channel slot are reserved. The last four Quick Paging Channel bit positions in a Quick Paging Channel slot are also reserved.

On Quick Paging Channels other than the first Quick Paging Channel, if the Quick Paging Channel data rate is 4800 bps (indicator rate is 9600 bps), the reserved indicator positions are described as follows:

- The last eight Quick Paging Channel bit positions in the first 40 ms half of a Quick Paging Channel slot are reserved. The last eight Quick Paging Channel bit positions in a Quick Paging Channel slot are also reserved.

3.6.3 Access Channel and Enhanced Access Channel Processing

During *Access Channel Processing*, the base station monitors the Access Channel to receive messages which the mobile station sends while the mobile station is in the *System Access State*.

Each Access Channel is associated with a Paging Channel. Up to 32 Access Channels can be associated with a Paging Channel. The number of Access Channels associated with a particular Paging Channel is specified in the *Access Parameters Message* sent on that Paging Channel.

If the base station supports Access Channels, the base station shall continually monitor all Access Channels associated with each Paging Channel that the base station transmits.

If the base station supports Enhanced Access Channels, then during *Enhanced Access Channel Processing*, the base station monitors the Enhanced Access Channel to receive messages which the mobile station sends while the mobile station is in the *System Access State*.

Each Enhanced Access Channel is associated with a Forward Common Control Channel. Up to 32 Enhanced Access Channels can be associated with a Forward Common Control Channel. The number of Enhanced Access Channels associated with a particular Forward Common Control Channel is specified in the *Enhanced Access Parameters Message* sent on the Primary Broadcast Control Channel.

If the base station supports Enhanced Access Channel, the base station shall continually monitor all Enhanced Access Channels associated with each Forward Common Control Channel that the base station transmits.

3.6.3.1 Reserved

3.6.3.2 Reserved

3.6.3.3 Response to Page Response Message and Reconnect Message

If the base station receives a *Page Response Message* or a *Reconnect Message* with the ORIG_IND field set to '0', the base station should send a *Channel Assignment Message* (if in response to a *Page Response Message*), an *Extended Channel Assignment Message*, or a *Release Order*. The base station may also start authentication procedures (see 2.3.12), start TMSI assignment procedures (see 2.3.15), send a *Data Burst Message*, or request status information records with the *Status Request Message*.

If the base station sends the *Extended Channel Assignment Message*, the base station may include more than one pilot to be in the Active Set.

If the base station sends a *Channel Assignment Message* or an *Extended Channel Assignment Message*, the base station shall perform the following:

- If the message directs the mobile station to a CDMA Traffic Channel, the base station shall begin *Traffic Channel Processing* (see 3.6.4) for the mobile station.
- If the reverse channel corresponding to forward channel included in this message is separated by flexible channel spacing, the base station shall extend this message using the General Extension Message and include a Reverse Channel Information Record that specifies the reverse frequency to be used by the mobile station for the traffic channel.

- Layer 3 shall send a *mobile station inactive on common channel* indication to Layer 2 (see [4]).

The base station may instruct the mobile station to use the stored service configuration (that is, both the Service Configuration information record and the Non-negotiable Service Configuration information record) by setting the GRANTED_MODE field of the *Extended Channel Assignment Message* to '11'.

3.6.3.4 Response to Orders

No requirements.

3.6.3.5 Response to Origination Message and Reconnect Message

If the base station receives an *Origination Message*, *Call Recovery Request Message* or a *Reconnect Message* with the ORIG_IND field set to '1', the base station should send a *Channel Assignment Message* (if in response to an *Origination Message*), an *Extended Channel Assignment Message*, an *Intercept Order*, a *Reorder Order*, a *Release Order*, a *Retry Order*, a *PACA Message*, a *Service Redirection Message* or a *Service Status Order*. The base station may also commence authentication procedures (see 2.3.12) or TMSI assignment procedures (see 2.3.15). The base station may also request status information records with the *Status Request Message*.

If the base station sends the *Extended Channel Assignment Message*, the base station may include more than one pilot to be in the Active Set.

If the base station sends a *Channel Assignment Message* or an *Extended Channel Assignment Message*, the base station shall perform the following:

- If the message directs the mobile station to a CDMA Traffic Channel, the base station shall begin *Traffic Channel Processing* (see 3.6.4) for the mobile station.
- If the reverse channel corresponding to forward channel included in this message is separated by flexible channel spacing, the base station shall extend this message using the General Extension Message and include a Reverse Channel Information Record that specifies the reverse frequency to be used by the mobile station for the traffic channel.
- The base station shall raise a *mobile station inactive on common channel* indication for the mobile station.

If the base station sends a *Channel Assignment Message*, the base station shall not set RESPOND equal to '0' when ASSIGN_MODE = '001', ASSIGN_MODE = '010', or ASSIGN_MODE = '101'. If the base station sends an *Extended Channel Assignment Message*, the base station shall not set RESPOND equal to '0' when ASSIGN_MODE = '001' or ASSIGN_MODE = '010'.

The base station may instruct the mobile station to use the stored service configuration (that is, both the Service Configuration information record and the Non-negotiable Service Configuration information record) by setting the GRANTED_MODE field of the *Extended Channel Assignment Message* to '11'.

If the base station receives an *Origination Message* and the GLOBAL_EMERGENCY_CALL

indicator is set to '1' and the service associated with this origination is a voice service, the base station shall recognize this as an emergency call and should process the message using an implementation-dependent procedure which may include ignoring the dialed digits. If the base station receives an *Origination Message* and the GLOBAL_EMERGENCY_CALL indicator is set to '1' and the service associated with this origination is not a voice service, the base station may recognize this as an emergency call and should process the message using an implementation-dependent procedure which may include ignoring the dialed digits.

3.6.3.6 Response to Registration Message

If the base station receives a *Registration Message*, the base station may send a *Registration Accepted Order*, a *Registration Rejected Order*, or a *Service Redirection Message*. The base station may also start authentication procedures (see 2.3.12), may start TMSI assignment procedures (see 2.3.15), or may request status information records with the *Status Request Message*.

If the *Registration Message* specifies a power-down registration, Layer 3 shall send a *mobile station inactive on common channel* indication to Layer 2 (see [4]).

When responding to a *Registration Message* that requests extended encryption, if the base station decides to turn on extended encryption and the CMEAKEY is available at the base station, the base station shall send a *Registration Accepted Order* with encryption information. Before the CMEAKEY is available, the base station may send a *Registration Accepted Order* without any encryption information. When the CMEAKEY becomes available, if the base station decides to turn on extended encryption, the base station shall send a *Registration Accepted Order* with encryption information.

3.6.3.7 Response to Data Burst Message

If the base station receives a *Data Burst Message* with BURST_TYPE indicating Short Data Burst (see [30]), the base station may send a *Retry Order*.

3.6.3.8 Reserved

3.6.3.9 Reserved

3.6.3.10 Service Redirection

If the base station sends a *Service Redirection Message* to the mobile station, Layer 3 shall send a *mobile station inactive on common channel* indication to Layer 2 (see [4]).

3.6.3.11 Response to General Extension Message

If the base station receives a message that is extended through *General Extension Message* the base station shall store the records and process the message as specified in section 3.6.3.1-3.6.3.8.

3.6.4 Traffic Channel Processing

During *Traffic Channel Processing*, the base station uses the Forward and Reverse Traffic Channels to communicate with the mobile station while the mobile station is in the *Mobile Station Control on the Traffic Channel State*.

Traffic Channel processing consists of the following substates:

- *Traffic Channel Initialization Substate* - In this substate, the base station begins transmitting on the Forward Traffic Channel and receiving on the Reverse Traffic Channel.
- *Traffic Channel Substate* - In this substate, the base station exchanges Traffic Channel frames with the mobile station in accordance with the current service configuration. While in this substate, one or more Call Control instances can be activated (see 3.6.8).
- *Release Substate* - In this substate, the base station disconnects the calls and the physical channels.

3.6.4.1 Special Functions and Actions

The base station performs the following special functions and actions in one or more of the Traffic Channel processing substates:

3.6.4.1.1 Forward Traffic Channel Power Control

Forward Traffic Channel Power Control procedures do not apply to Forward Packet Data Channel.

When the base station enables Forward Traffic Channel power control, the mobile station reports frame error rate statistics to the base station using the *Power Measurement Report Message*.

The base station may enable Forward Traffic Channel power control using the *System Parameters Message* sent on the Paging Channel and the *Power Control Parameters Message* sent on the Forward Traffic Channel. The base station may enable Forward Traffic Channel power control using the *MC-RR Parameters Message* sent on the Primary Broadcast Control Channel and the *Power Control Parameters Message* sent on the Forward Traffic Channel. The base station may enable periodic reporting which causes the mobile station to report frame error rate statistics at specified intervals. The base station may also enable threshold reporting which causes the mobile station to report frame error rate statistics when the frame error rate reaches a specified threshold.[2]

The base station may use the reported frame error rate statistics to adjust the transmit power of the Forward Traffic Channel.

[2]In this section the term base station may imply multiple cells or sectors.

3.6.4.1.2 Service Configuration and Negotiation

During Traffic Channel operation, the mobile station and base station communicate through the exchange of Forward and Reverse Traffic Channel Configurations. The mobile station and base station use a common set of attributes for building and interpreting Traffic Channel frames. This set of attributes, referred to as a service configuration, consists of both negotiable and non-negotiable parameters.

The set of negotiable service configuration parameters consists of the following:

1. Forward and Reverse Multiplex Options: These control the way in which the information bits of the Forward and Reverse Traffic Channel frames, respectively, are divided into various types of traffic, such as signaling traffic, primary traffic and secondary traffic. A multiplex option together with a radio configuration specifies the frame structures and transmission rates (see [3]). The Multiplex Options which support Supplemental Code Channel transmission and Supplemental Channel transmission on the Forward and Reverse Traffic Channels are included in [3]. Invocation of Supplemental Code Channel operation on the Forward or Reverse Traffic Channels occurs by transmission of the *Supplemental Channel Request Message*, the *Supplemental Channel Assignment Message*, and the *General Handoff Direction Message*. The Multiplex Options which support Supplemental Code Channel transmission and Supplemental Channel transmission on the Forward and Reverse Traffic Channels are included in [3]. The multiplex option used for the Forward Traffic Channel can be the same as that used for the Reverse Traffic Channel, or it can be different.

2. *Forward* and *Reverse Traffic Channel Configurations:* These include the radio configurations and other necessary attributes for the Forward and Reverse Traffic Channels. The Traffic Channel Configuration used can be different for the Forward and Reverse Traffic Channels or it can be the same.

3. Forward and Reverse Traffic Channel Transmission Rates: These are the transmission rates actually used for the Forward and Reverse Traffic Channels, respectively. The transmission rates for the Forward Traffic Channel can include all of the transmission rates supported by the radio configuration associated with the Forward Traffic Channel multiplex option, or a subset of the supported rates. Similarly, the transmission rates used for the Reverse Traffic Channel can include all rates supported by the radio configuration associated with the Reverse Traffic Channel multiplex option, or a subset of the supported rates. The transmission rates used for the Forward Traffic Channel can be the same as those used for the Reverse Traffic Channel, or they can be different.

4. Service Option Connections: These are the services in use on the Traffic Channel. There can be multiple service option connections. It is also possible that there is no service option connection, in which case the base station uses the Forward Traffic Channel as follows:

    - Sends signaling traffic and null traffic on the Forward Fundamental Channel.

- Sends signaling traffic on the Forward Dedicated Control Channel.
- If F-CPCCH is assigned, sends power control bits on the F-CPCCH; otherwise, sends power control bits on the Forward Fundamental Channel if FPC_PRI_CHAN is set to '0'; sends power control bits on the Forward Dedicated Control Channel if FPC_PRI_CHAN is set to '1'.

Associated with each service option connection are a service option, a Forward Traffic Channel traffic type, a Reverse Traffic Channel traffic type, and a service option connection reference. The associated service option formally defines the way in which traffic bits are processed by the mobile station and base station. The associated Forward and Reverse Traffic Channel traffic types specify the types of traffic used to support the service option. A service option can require the use of a particular type of traffic, such as primary or secondary, or it can accept more than one traffic type. A service option can be one-way, in which case it can be supported on the Forward Traffic Channel only or the Reverse Traffic Channel only. Alternatively, a service option can be two-way, in which case it can be supported on the Forward and Reverse Traffic Channels simultaneously. Connected service options can also invoke operation on Supplemental Code Channels in either one or both of the Forward and Reverse Traffic Channels by negotiating a multiplex option that supports operation on Supplemental Code Channels (see [3] for Multiplex Options applicable to Supplemental Code Channels), and by using the appropriate Supplemental Code Channel related messages (i.e., the *Supplemental Channel Request Message*, the *Supplemental Channel Assignment Message*, and the *General Handoff Direction Message).* After Supplemental Code Channels have been assigned by the base station, the connected service option can transmit primary and/or secondary traffic on Supplemental Code Channels. Connected service options can also invoke operation on Supplemental Channels in either one or both of the Forward and Reverse Traffic Channels by negotiating a multiplex option that supports operation on Supplemental Channels (see [3] for Multiplex Options applicable to Supplemental Channels) and by using the appropriate Supplemental Channel related messages (i.e., the *Supplemental Channel Request Message*, the *Universal Handoff Direction Message*, the *Supplemental Channel Request Mini Message*, the *Extended Supplemental Channel Assignment Message*, the *Forward Supplemental Channel Assignment Mini Message*, and the *Reverse Supplemental Channel Assignment Mini Message*). After Supplemental Channels have been assigned by the base station, the connected service option can transmit primary and/or secondary traffic on Supplemental Channels. The associated service option connection reference provides a means for uniquely identifying the service option connection. The reference serves to resolve ambiguity when there are multiple service option connections in use.

The non-negotiable service configuration parameters are sent from the base station to the mobile stations only, and consist of the following:

1. *Reverse Pilot Gating Rate*: This controls the way in which the reverse pilot is gated on the Reverse Pilot Channel. The base station specifies the reverse pilot gating rate to be used in the *Service Connect Message*, the *General Handoff Direction Message*, and the *Universal Handoff Direction Message*.

2. *Forward and Reverse Power Control Parameters:* These consist of forward power control operation mode, outer loop power control parameters (e.g. target frame error rate, minimum E_b/N_t setpoint, and maximum E_b/N_t setpoint) for the Forward Fundamental Channel and Forward Dedicated Control Channel, and Power Control Subchannel indicator which indicates where the mobile station is to perform the primary inner loop estimation and the base station is to multiplex the Power Control Subchannel.

3. *Logical to Physical Mapping*: This is a table of logical to physical mapping entries, consisting of service reference identifier, logical resource, physical resource, forward flag, reverse flag, and priority.

4. *Partition Table*: The base station may include this table to specify the number of bits allocated for each service in the Fundamental Channel or Dedicated Control Channel.

5. *SCH LTU Size Table*: The base station may include this table to specify the number of bits per supplemental channel LTU.

6. Information related to Variable Rate feature (the capability to support rate determination) on Forward and Reverse Supplemental Channels

7. Information related to Flexible Rate feature (the capability to support non-listed rates) on Forward and Reverse Fundamental Channel, Dedicated Control Channel, and Supplemental Channels

The mobile station can request a default service configuration associated with a service option at call origination, and can request new service configurations during Traffic Channel operation. A requested service configuration can differ greatly from its predecessor or it can be very similar. For example, the mobile station can request a service configuration in which all of the service option connections are different from those of the existing configuration; or the mobile station can request a service configuration in which the existing service option connections are maintained with only minor changes, such as a different set of transmission rates or a different mapping of service option connections to Forward and Reverse Traffic Channel traffic types.

If the mobile station requests a service configuration that is acceptable to the base station, they both begin using the new service configuration. If the mobile station requests a service configuration that is not acceptable to the base station, the base station can reject the requested service configuration or propose an alternative service configuration. If the base station proposes an alternative service configuration, the mobile station can accept or reject the base station's proposed service configuration, or propose yet another service configuration. This process, called service negotiation, ends when the mobile station and base station find a mutually acceptable service configuration, or when either the mobile station or base station rejects a service configuration proposed by the other.

It is also possible for the base station to request a default service configuration, associated with a service option, when paging the mobile station and to request new service configurations during Traffic Channel operation. The service negotiation proceeds as described above, but with the roles of the mobile station and base station reversed.

For CDMA mode operation in Band Class 0, the mobile station and base station can also use an alternative method for negotiating a service configuration known as service option negotiation. Service option negotiation is similar to service negotiation, but offers less flexibility for specifying the attributes of the service configuration. During service option negotiation, the base station or mobile station specifies only which service option is to be used. There is no facility for explicitly specifying the multiplex options, traffic types or transmission rates to be used on the Forward and Reverse Traffic Channels in conjunction with the service option. Instead, implicit service configuration attributes are assumed. In particular, the Forward and Reverse Multiplex Options and transmission rates are assumed to be the default multiplex options and transmission rates associated with the requested service option, and the traffic type for both the Forward and Reverse Traffic Channels is assumed to be primary traffic. Furthermore, a service configuration established using service option negotiation is restricted to having only a single service option connection.

At mobile station origination and termination, the type of negotiation to use, either service negotiation or service option negotiation, is indicated in the *Channel Assignment Message*. Service negotiation is always used with the *Extended Channel Assignment Message*. If a CDMA-to-CDMA hard handoff occurs during the call, the type of negotiation to use following the handoff is indicated in the *Extended Handoff Direction Message*, *General Handoff Direction Message*, or *Universal Handoff Direction Message*.

For CDMA mode operation in band classes other than Band Class 0, only service negotiation is to be used.

The following messages are used to support service negotiation:

1. *Service Request Message:* The mobile station can use this message to propose a service configuration, or to accept or reject a service configuration proposed in a *Service Response Message*. The base station can use this message to propose a service configuration, or to reject a service configuration proposed in a *Service Response Message*.

2. *Service Response Message:* The mobile station can use this message to accept or reject a service configuration proposed in a *Service Request Message*, or to propose an alternative service configuration. The base station can use this message to reject a service configuration proposed in a *Service Request Message*, or to propose an alternative service configuration.

3. *Service Connect Message:* The base station can use this message to accept a service configuration proposed in a *Service Request Message* or *Service Response Message*, and instruct the mobile station to begin using the service configuration. The base station may use this message to instruct the mobile station to use the stored service configuration (that is, both the Service Configuration information record and the Non-negotiable Service Configuration information record) based on

the value of the SYNC_ID that the mobile station has reported in the *Origination Message* or *Page Response Message*. If P_REV_IN_USE is greater than or equal to 11, the base station can use this message to instruct the mobile station to use the stored service configuration (that is, both the Service Configuration information record and the Non-negotiable Service Configuration information record) based on the value of the SYNC_ID that the base station has included in this message.

4. *Service Connect Completion Message:* The mobile station can use this message to acknowledge the transition to a new service configuration.

5. *Service Option Control Message:* The mobile station and base station can use this message to invoke service option specific functions.

6. *Extended Channel Assignment Message:* The base station can use this message to accept or reject the initial service configuration proposed by the mobile station in an *Origination Message* or a *Page Response Message*.

The following messages are used to support service option negotiation:

1. *Service Option Request Order:* The mobile station and base station can use this message either to request a service option or suggest an alternative service option.

2. *Service Option Response Order:* The mobile station and base station can use this message to accept or reject a service option request.

3. *Service Option Control Order:* The mobile station and base station can use this message to invoke service option specific functions.

The following messages are used to support both service negotiation and service option negotiation:

1. *Origination Message:* The mobile station can use this message to propose an initial service configuration.

2. *Channel Assignment Message:* The base station can use this message to accept or reject the initial service configuration proposed by the mobile station in an *Origination Message* or a *Page Response Message*, and to indicate which type of negotiation, either service negotiation or service option negotiation, is to be used during the call.

3. *Extended Handoff Direction Message:* The base station can use this message to indicate which type of negotiation, either service negotiation or service option negotiation, is to be used following a CDMA-to-CDMA hard handoff.

4. *General Handoff Direction Message:* The base station can use this message to indicate which type of negotiation, either service negotiation or service option negotiation, is to be used following a CDMA-to-CDMA hard handoff. The base station can use this message to accept a service configuration proposed in a *Service Request Message* or *Service Response Message*. The base station can also use this message to instruct the mobile station to begin using the service configuration.

5. *General Page Message* or *Universal Page Message:* The base station can use a mobile-station-addressed page in a *General Page Message* or *Universal Page Message* to propose an initial service configuration.

6. *Page Response Message:* The mobile station can use this message to accept or reject the initial service configuration proposed by the base station in a mobile-station-addressed page, or to propose an alternative initial service configuration.

7. *Status Request Message:* The base station can use this message to request service capability information from the mobile station.

8. *Status Response Message:* The mobile station can use this message to return the service capability information requested by the base station in a *Status Request Message*.

9. *Extended Status Response Message:* The mobile station can use this message to return the service capability information requested by the base station in a *Status Request Message*.

10. *Universal Handoff Direction Message:* The base station can use this message to indicate which type of negotiation, either service negotiation or service option negotiation, is to be used following a CDMA-to-CDMA hard handoff. The base station can use this message to accept a service configuration proposed in *a Service Request Message* or *Service Response Message*. The base station can also use this message to instruct the mobile station to begin using the service configuration.

3.6.4.1.2.1 Use of Variables

3.6.4.1.2.1.1 Maintaining the Service Request Sequence Number

The base station shall maintain a service request sequence number variable, SERV_REQ_NUM, for use with service negotiation. Upon beginning Traffic Channel processing, the base station shall set SERV_REQ_NUM to 0. Each time the base station sends a new *Service Request Message*, it shall set the SERV_REQ_SEQ field of the message to the current value of SERV_REQ_NUM and shall then set SERV_REQ_NUM equal to (SERV_REQ_NUM + 1) modulo 8.

3.6.4.1.2.1.2 Maintaining the Service Connect Sequence Number

The base station shall maintain a service connect sequence number variable, SERV_CON_NUM, for use with service negotiation. Upon beginning Traffic Channel processing, the base station shall set SERV_CON_NUM to 0. Each time the base station sends a new *Service Connect Message*, a *General Handoff Direction Message*, or a *Universal Handoff Direction Message* containing a service configuration record, it shall set the SERV_CON_SEQ field of the message to the current value of SERV_CON_NUM and shall then set SERV_CON_NUM equal to (SERV_CON_NUM + 1) modulo 8.

3.6.4.1.2.1.3 Assigning Service Option Connection References

When the base station assigns a service option connection reference for use in identifying a new service option connection during service negotiation, the base station shall use the following criteria:

1. The base station shall not assign a reference equal to '00000000'; and
2. The base station shall not assign a reference that is associated with a service option connection of the current service configuration; and
3. If there was a previous service configuration, the base station shall not assign a reference that was associated with a service option connection of the previous service configuration.

3.6.4.1.2.1.4 Maintaining the Service Negotiation Indicator Variable

The base station shall maintain a service negotiation indicator variable, SERV_NEG, to indicate which type of negotiation to use, either service negotiation or service option negotiation. The base station shall set SERV_NEG to enabled whenever service negotiation is to be used, and shall set SERV_NEG to disabled whenever service option negotiation is to be used. The precise rules for setting SERV_NEG are specified in 3.6.4.2 and 3.6.6.2.2.2.

For CDMA operation in band classes other than Band Class 0, the base station shall set SERV_NEG to enabled.

3.6.4.1.2.1.5 Maintaining the Service Option Request Number

The base station shall maintain a service option request number variable, SO_REQ, for use with service option negotiation. The base station shall set SO_REQ to a special value, NULL, if the base station does not have an outstanding service option request. If the base station has an outstanding service option request, the base station shall set SO_REQ to the number of the service option associated with the outstanding request.

3.6.4.1.2.2 Service Subfunctions

As illustrated in Figure 3.6.4.1.2.2-1, the base station supports service configuration and negotiation by performing the following set of service subfunctions.

- *Normal Service Subfunction* - While this subfunction is active, the base station processes service configuration requests from the mobile station and sends service configuration requests to the mobile station.
- *Waiting for Service Request Message Subfunction* - While this subfunction is active, the base station waits to receive a *Service Request Message*.
- *Waiting for Service Response Message Subfunction* - While this subfunction is active, the base station waits to receive a *Service Response Message*.
- *Waiting for Service Action Time Subfunction* - While this subfunction is active, the base station waits for the action time associated with a new service configuration.

- *Waiting for Service Connect Completion Message Subfunction* - While this subfunction is active, the base station waits to receive a *Service Connect Completion Message*, a *Handoff Completion Message*, or an *Extended Handoff Completion Message*.
- *SO Negotiation Subfunction* - While this subfunction is active and the base station is operating in Band Class 0, the base station supports service option negotiation with the mobile station.

The *SO Negotiation Subfunction* supports service option negotiation. All of the other service subfunctions support service negotiation.

At any given time during Traffic Channel processing, only one of the service subfunctions is active. For example, when the base station first begins Traffic Channel processing, either the *Normal Service Subfunction* or the *SO Negotiation Subfunction* is active. Each of the other service subfunctions may become active in response to various events which occur during the Traffic Channel substates. Typically, the base station processes events pertaining to service configuration and negotiation in accordance with the requirements for the active service subfunction. However, some Traffic Channel substates do not allow for the processing of certain events pertaining to service configuration and negotiation, or specify requirements for processing such events which supersede the requirements of the active service subfunction.

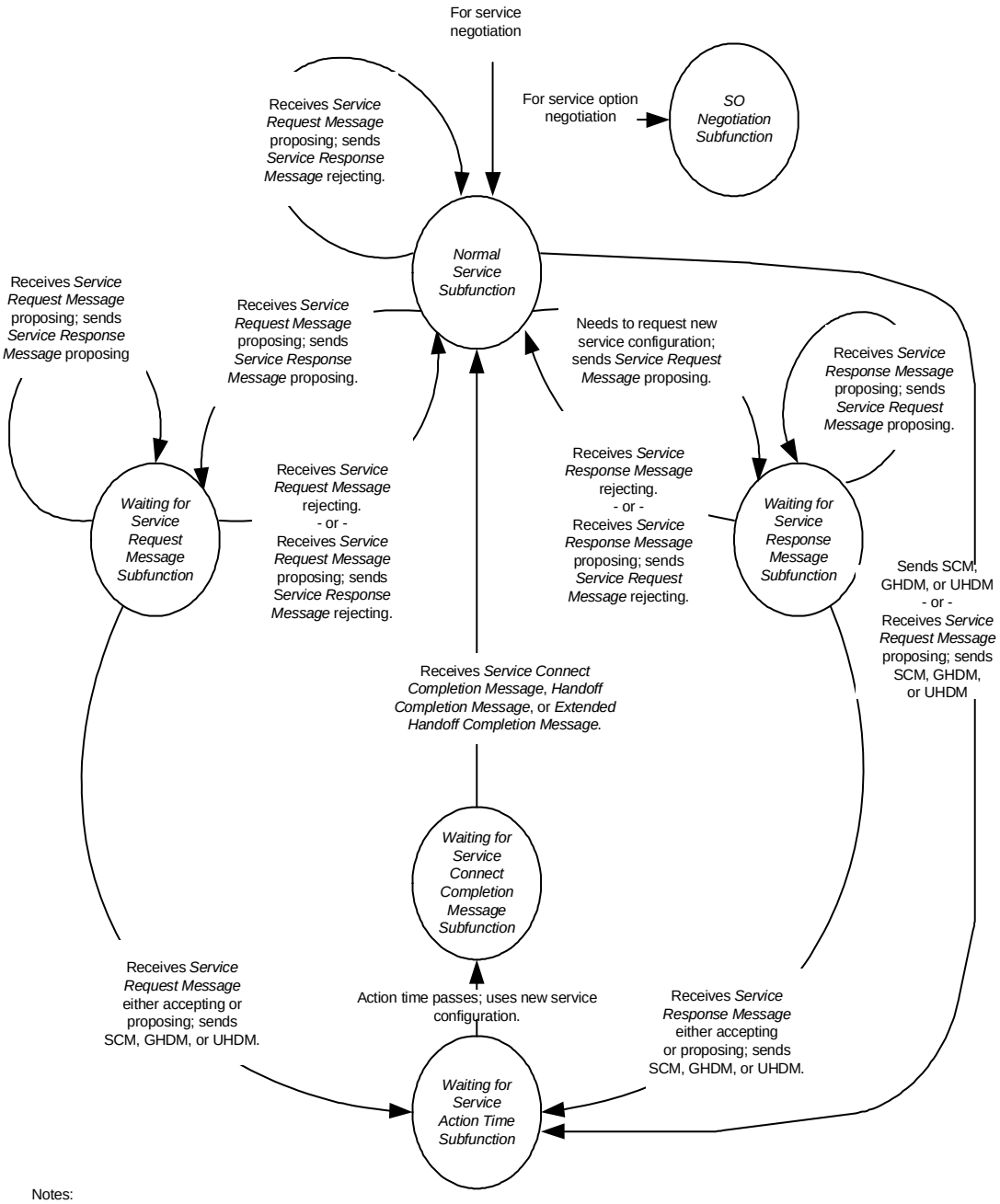

Notes:

- SCM stands for *Service Connect Message*.
- GHDM stands for *General Handoff Direction Message*.
- UHDM stands for *Universal Handoff Direction Message*.
- Processing for special cases, such as timeouts and errors, is not shown in this diagram.

Figure 3.6.4.1.2.2-1. Base Station Service Subfunctions

3.6.4.1.2.2.1 Normal Service Subfunction

While this subfunction is active, the base station processes service configuration requests from the mobile station and sends service configuration requests to the mobile station.

While the *Normal Service Subfunction* is active, the base station shall perform the following:

- The base station shall process Forward and Reverse Traffic Channel frames in accordance with the current service configuration. The base station shall discard any Reverse Traffic Channel frame which has a format that is not supported by the base station. The base station may discard any type of Reverse Traffic Channel traffic that is not signaling traffic and is not part of the current service configuration.
- To initiate service negotiation for a new service configuration, the base station shall send a *Service Request Message* to propose the new service configuration and shall activate the *Waiting for Service Response Message Subfunction*.
- For any service option connection that is part of the current service configuration, the base station may send a *Service Option Control Message* to invoke a service option specific function in accordance with the requirements for the associated service option.
- The base station may send a *Service Connect Message*, a *General Handoff Direction Message*, or a *Universal Handoff Direction Message* containing a service configuration record. If the base station sends this message, the base station shall activate the *Waiting for Service Action Time Subfunction*.
- If SERV_NEG changes from enabled to disabled (see 3.6.6.2.2.2, 3.6.6.2.2.10, and 3.6.6.2.2.11), the base station shall activate the *SO Negotiation Subfunction*.
- If the base station receives one of the following service negotiation messages, the base station shall process the message according to the specified requirements, if any:
    1. *Service Connect Completion Message*
    2. *Service Option Control Message:* If the service option connection specified by the message is part of the current service configuration, and the service option specified by the message is the same as the service option associated with the service option connection, the base station shall process the message in accordance with the requirements for the service option.
    3. *Service Request Message:* The base station shall process the message as follows:
        - If the purpose of the message is to propose a service configuration, the base station shall process the message as follows:

- If the base station accepts the proposed service configuration, the base station shall send a *Service Connect Message*, a *General Handoff Direction Message*, or a *Universal Handoff Direction Message* containing a service configuration record and shall activate the *Waiting for Service Action Time Subfunction*.
  - If the base station does not accept the proposed service configuration and does not have an alternative service configuration to propose, the base station shall send a *Service Response Message* to reject the proposed service configuration.
- If the base station does not accept the proposed service configuration and has an alternative service configuration to propose, the base station shall perform one of the following actions:
    - Send a *Service Response Message* to propose the alternative service configuration and shall activate the *Waiting for Service Request Message Subfunction*, or
    - Send a *Service Connect Message*, a *General Handoff Direction Message*, or a *Universal Handoff Direction Message* containing a service configuration record and shall activate the *Waiting for Service Action Time Subfunction*

4. *Service Response Message*

- If the base station receives one of the following service option negotiation messages, the base station shall process the message according to the specified requirements, if any:
  1. *Service Option Request Order*
  2. *Service Option Response Order*
  3. *Service Option Control Order*

3.6.4.1.2.2.2 Waiting for Service Request Message Subfunction

While this subfunction is active, the base station waits to receive a S*ervice Request Message*.

While the *Waiting for Service Request Message Subfunction* is active, the base station shall perform the following:

- If the base station does not receive a *Service Request Message*, the base station shall activate the *Normal Service Subfunction*.

- The base station shall process Forward and Reverse Traffic Channel frames in accordance with the current service configuration. The base station shall discard any Reverse Traffic Channel frame which has a format that is not supported by the base station. The base station may discard any type of Reverse Traffic Channel traffic that is not signaling traffic and is not part of the current service configuration.
- For any service option connection that is part of the current service configuration, the base station may send a *Service Option Control Message* to invoke a service option specific function in accordance with the requirements for the associated service option.
- If SERV_NEG changes from enabled to disabled (see 3.6.6.2.2.2, 3.6.6.2.2.10, and 3.6.6.2.2.11), the base station shall activate the *SO Negotiation Subfunction*.
- If the base station receives one of the following service negotiation messages, the base station shall process the message according to the specified requirements, if any:
  1. *Service Connect Completion Message*
  2. *Service Option Control Message:* If the service option connection specified by the message is part of the current service configuration, and the service option specified by the message is the same as the service option associated with the service option connection, the base station shall process the message in accordance with the requirements for the service option.
  3. *Service Request Message:* The base station shall process the message as follows:
     - If the purpose of the message is to accept a proposed service configuration, the base station shall perform one of the following actions:
       - The base station shall send a *Service Connect Message*, *General Handoff Direction Message*, or *Universal Handoff Direction Message* and shall activate the *Waiting for Service Action Time Subfunction*.
       - The base station shall send a *Service Request Message* to propose an alternative service configuration and shall activate the *Waiting for Service Response Message Subfunction*.
     - If the purpose of the message is to reject a proposed service configuration, the base station shall activate the *Normal Service Subfunction*.
     - If the purpose of the message is to propose a service configuration, the base station shall process the message as follows:
       - If the base station accepts the proposed service configuration, the base station shall send a *Service Connect Message*, a *General Handoff Direction Message*, or a *Universal Handoff Direction Message* containing a service configuration record and shall activate the *Waiting for Service Action Time Subfunction*.

- If the base station does not accept the proposed service configuration and does not have an alternative service configuration to propose, the base station shall send a *Service Response Message* to reject the proposed service configuration. The base station shall activate the *Normal Service Subfunction*.
- If the base station does not accept the proposed service configuration and has an alternative service configuration to propose, the base station shall perform one of the following actions:
  - Send a *Service Response Message* to propose the alternative service configuration, or
  - Send a *Service Connect Message*, a *General Handoff Direction Message*, or a *Universal Handoff Direction Message* containing a service configuration record and shall activate the *Waiting for Service Action Time Subfunction*

4. *Service Response Message*

- If the base station receives one of the following service option negotiation messages, the base station shall process the message according to the specified requirements, if any:

  1. *Service Option Request Order*
  2. *Service Option Response Order*
  3. *Service Option Control Order*

3.6.4.1.2.2.3 Waiting for Service Response Message Subfunction

While this subfunction is active, the base station waits to receive a *Service Response Message*.

While the *Waiting for Service Response Message Subfunction* is active, the base station shall perform the following:

- If the base station does not receive a *Service Response Message*, the base station shall activate the *Normal Service Subfunction*.
- The base station shall process Forward and Reverse Traffic Channel frames in accordance with the current service configuration. The base station shall discard any Reverse Traffic Channel frame which has a format that is not supported by the base station. The base station may discard any type of Reverse Traffic Channel traffic that is not signaling traffic and is not part of the current service configuration.
- For any service option connection that is part of the current service configuration, the base station may send a *Service Option Control Message* to invoke a service option specific function in accordance with the requirements for the associated service option.

- If SERV_NEG changes from enabled to disabled (see 3.6.6.2.2.2, 3.6.6.2.2.10, and 3.6.6.2.2.11), the base station shall activate the *SO Negotiation Subfunction*.
- If the base station receives one of the following service negotiation messages, the base station shall process the message according to the specified requirements, if any:
  1. *Service Connect Completion Message*
  2. *Service Option Control Message:* If the service option connection specified by the message is part of the current service configuration, and the service option specified by the message is the same as the service option associated with the service option connection, the base station shall process the message in accordance with the requirements for the service option.
  3. *Service Request Message:* The base station should not process the Layer 3 fields of the message.
  4. *Service Response Message:* The base station shall process the message as follows:
     - If the service request sequence number (SERV_REQ_SEQ) from the message does not match the sequence number of the *Service Request Message* for which the base station is expecting a response, the base station shall not process the Layer 3 fields of the message.
     - If the purpose of the message is to accept a proposed service configuration, the base station shall perform one of the following actions:
       - The base station shall send a *Service Connect Message*, a *General Handoff Direction Message*, or a *Universal Handoff Direction Message* containing a service configuration record and shall activate the *Waiting for Service Action Time Subfunction*. Or
       - The base station shall send a *Service Request Message* to propose an alternative service configuration.
     - If the purpose of the message is to reject a proposed service configuration, the base station shall activate the *Normal Service Subfunction*.
     - If the purpose of the message is to propose a service configuration, the base station shall process the message as follows:
       - If the base station accepts the proposed service configuration, the base station shall send a *Service Connect Message*, a *General Handoff Direction Message*, or a *Universal Handoff Direction Message* containing a service configuration record and shall activate the *Waiting for Service Action Time Subfunction*.

- If the base station does not accept the proposed service configuration and does not have an alternative service configuration to propose, the base station shall send a *Service Request Message* to reject the proposed service configuration. The base station shall activate the *Normal Service Subfunction*.
- If the base station does not accept the proposed service configuration and has an alternative service configuration to propose, the base station shall perform one of the following actions:
  - Send a *Service Request Message* to propose the alternative service configuration, or
  - Send a *Service Connect Message*, a *General Handoff Direction Message*, or a *Universal Handoff Direction Message* containing a service configuration record and shall activate the *Waiting for Service Action Time Subfunction*

- If the base station receives one of the following service option negotiation messages, the base station shall process the message according to the specified requirements, if any:
  1. *Service Option Request Order*
  2. *Service Option Response Order*
  3. *Service Option Control Order*

3.6.4.1.2.2.4 Waiting for Service Action Time Subfunction

While this subfunction is active, the base station waits for the action time associated with a new service configuration.

While the *Waiting for Service Action Time Subfunction* is active, the base station shall perform the following:

- Prior to the action time associated with the *Service Connect Message*, a *General Handoff Direction Message*, or *Universal Handoff Direction Message* containing a service configuration record, the base station shall process Forward and Reverse Traffic Channel frames in accordance with the current service configuration. The base station shall discard any Reverse Traffic Channel frame which has a format that is not supported by the base station. The base station may discard any type of Reverse Traffic Channel traffic that is not signaling traffic and is not part of the current service configuration.

- At the action time associated with the *Service Connect Message*, *General Handoff Direction Message*, or *Universal Handoff Direction Message* containing a service configuration record, the base station shall begin to use the service configuration specified by the *Service Connect Message*, the *General Handoff Direction Message*, or the *Universal Handoff Direction Message* containing a service configuration record, as the current service configuration and shall begin to process Forward and Reverse Traffic Channel frames accordingly. The base station shall activate the *Waiting for Service Connect Completion Message Subfunction*.
- If SERV_NEG changes from enabled to disabled (see 3.6.6.2.2.2, 3.6.6.2.2.10, and 3.6.6.2.2.11), the base station shall activate the *SO Negotiation Subfunction*.
- If the base station receives one of the following service negotiation messages, the base station shall process the message according to the specified requirements, if any:
  1. *Service Connect Completion Message*
  2. *Service Option Control Message:* If the service option connection specified by the message is part of the current or pending service configuration, and the service option specified by the message is the same as the service option associated with the service option connection, the base station shall process the message in accordance with the requirements for the service option.
  3. *Service Request Message*
  4. *Service Response Message*
- If the base station receives one of the following service option negotiation messages, the base station shall process the message according to the specified requirements, if any:
  1. *Service Option Request Order*
  2. *Service Option Response Order*
  3. *Service Option Control Order*

3.6.4.1.2.2.5 Waiting for Service Connect Completion Message Subfunction

While this subfunction is active, the base station waits to receive a *Service Connect Completion Message*, a *Handoff Completion Message*, or an *Extended Handoff Completion Message*.

While the *Waiting for Service Connect Completion Message Subfunction* is active, the base station shall perform the following:

- If the base station has sent a *Service Connect Message* and does not receive a *Service Connect Completion Message*, or if the base station has sent a *General Handoff Direction Message* or a *Universal Handoff Direction Message* containing a Service Configuration record and does not receive a *Handoff Completion Message*, or an *Extended Handoff Completion Message*, the base station shall activate the *Normal Service Subfunction*.

- The base station shall process Forward and Reverse Traffic Channel frames in accordance with the current service configuration. The base station shall discard any Reverse Traffic Channel frame which has a format that is not supported by the base station. The base station may discard any type of Reverse Traffic Channel traffic that is not signaling traffic and is not part of the current service configuration.
- The base station shall not initiate service negotiation for a new service configuration.
- If SERV_NEG changes from enabled to disabled (see 3.6.6.2.2.2, 3.6.6.2.2.10, and 3.6.6.2.2.11), the base station shall activate the *SO Negotiation Subfunction*.
- If the base station receives one of the following service negotiation messages, the base station shall process the message according to the specified requirements, if any:
    1. *Service Connect Completion Message*, *Handoff Completion Message*, or *Extended Handoff Completion Message:* The base station shall activate the *Normal Service Subfunction*.
    2. *Service Option Control Message:* If the service option connection specified by the message is part of the current service configuration, and the service option specified by the message is the same as the service option associated with the service option connection, the base station shall process the message in accordance with the requirements for the service option.
    3. *Service Request Message*
    4. *Service Response Message*
- If the base station receives one of the following service option negotiation messages, the base station shall process the message according to the specified requirements, if any:
    1. *Service Option Request Order*
    2. *Service Option Response Order*
    3. *Service Option Control Order*

3.6.4.1.2.2.6 SO Negotiation Subfunction

While this subfunction is active, the base station supports service option negotiation with the mobile station.

Upon activating the *SO Negotiation Subfunction*, the base station shall set SO_REQ to NULL. The base station shall delete from the current service configuration any service option connection which does not use primary traffic on both the Forward and Reverse Traffic Channels.

While the *SO Negotiation Subfunction* is active, the base station shall perform the following:

- If the current service configuration includes a service option connection, the base station shall process the received primary traffic bits in accordance with the requirements for the service option associated with the service option connection; otherwise, the base station shall discard the received primary traffic bits.
- If the current service configuration includes a service option connection, the base station shall transmit primary traffic bits in accordance with the requirements for the service option associated with the service option connection; otherwise, the base station shall transmit null traffic and power control bits on the Forward Fundamental Channel, if the Fundamental channel is present to transmit power control bits on the Forward Dedicated Control Channel, if only the Dedicated Control Channel is present.
- If the current service configuration includes a service option connection, the base station may send a *Service Option Control Order* to invoke a service option specific function in accordance with the requirements for the service option associated with the service option connection.
- To initiate service option negotiation, the base station shall set SO_REQ to the number of the requested service option and shall send a *Service Option Request Order* containing the requested service option number.
- If SERV_NEG changes from disabled to enabled (see 3.6.6.2.2.2, 3.6.6.2.2.10, and 3.6.6.2.2.11), the base station shall activate the *Normal Service Subfunction*.
- The base station shall process a service option request received in an *Origination Message*, a *Page Response Message*, or a *Service Option Request Order* as follows:
  - If the base station accepts the requested service option, the base station shall set SO_REQ to NULL and shall send a *Service Option Response Order* accepting the requested service option within T_{4b} seconds. The base station shall begin using the service configuration implied by the requested service option in accordance with the requirements for the requested service option. The implied service configuration shall include the default Forward and Reverse Multiplex Options and transmission radio configurations associated with the requested service option. This implied service configuration shall include one service option connection for which the service option connection reference is 1, for which the service option is the requested service option, and for which the Forward and Reverse Traffic Channel types are both primary traffic.
  - If the base station does not accept the requested service option and has an alternative service option to request, the base station shall set SO_REQ to the alternative service option number and shall send a *Service Option Request Order* requesting the alternative service option within T_{4b} seconds.
  - If the base station does not accept the requested service option and does not have an alternative service option to request, the base station shall set SO_REQ to NULL and shall send a *Service Option Response Order* to reject the request within T_{4b} seconds. The base station shall continue to use the current service configuration.

- If the base station receives a *Service Option Response Order*, it shall process the order as follows:
  - If the service option number specified in the order is equal to SO_REQ, the base station shall set SO_REQ to NULL and shall begin using the service configuration implied by the specified service option in accordance with the requirements for the service option. The implied service configuration shall include the default Forward and Reverse Multiplex Options and radio configurations associated with the requested service option. This implied service configuration shall include one service option connection for which the service option connection reference is 1, for which the service option is the requested service option, and for which the Forward and Reverse Traffic Channel types are both primary traffic.
  - If the order indicates a service option rejection, the base station shall set SO_REQ to NULL. The base station shall continue to use the current service configuration.
  - If the order does not indicate a service option rejection and the service option specified in the order is not equal to SO_REQ, the base station shall set SO_REQ to NULL, should send a *Release Order* (ORDQ = '00000010'), and should enter the *Release Substate*.
- If the base station receives a *Service Option Control Order*, the base station shall process the order as follows:
  - If the current service configuration includes a service option connection, the base station shall process the received *Service Option Control Order* in accordance with the requirements for the service option associated with the service option connection.
- If the base station receives one of the following service negotiation messages, the base station shall process the message according to the specified requirements, if any:
  1. *Service Connect Completion Message*
  2. *Service Option Control Message*
  3. *Service Request Message*
  4. *Service Response Message*

3.6.4.1.3 Ordering of Messages

The Layer 2 protocol does not guarantee delivery of messages in any order. If the base station requires that the mobile station receive a set of messages in a certain order, the base station shall send each message in assured mode requiring confirmation of delivery and shall wait for the confirmation of delivery of each message before transmitting the next message in the set.

3.6.4.1.4 Message Action Times

A Forward Traffic Channel message without a USE_TIME field or with a USE_TIME field set to '0' has an implicit action time. A message that has its USE_TIME field set to '1' has an explicit action time that is specified in the ACTION_TIME field of the message.

A message with an explicit action time is called a pending message.

Unless otherwise specified, a message having an implicit action time shall take effect no later than the first 80 ms boundary (relative to System Time plus $\text{FRAME\_OFFSET}_S \times 1.25$ ms) occurring at least 80 ms after the end of the frame containing the last bit of the message. A message with an explicit action time, except for a *Power Up Function Message*, shall take effect when System Time minus $\text{FRAME\_OFFSET}_S \times 1.25$ ms (in 80 ms units) modulo 64 becomes equal to the message's ACTION_TIME field. A *Power Up Function Message* shall take effect ACTION_TIME_FRAME frames after the time when System Time minus $\text{FRAME\_OFFSET}_S \times 1.25$ ms (in 80 ms units) modulo 64 becomes equal to the message's ACTION_TIME field. The difference in time between ACTION_TIME and the end of the frame containing the last bit of the message shall be at least 80 ms.

The base station shall support two pending messages at any given time, not including pending *Service Option Control Orders*, *Service Option Control Messages*, or *Power Up Function Messages*. The number of pending *Service Option Control Orders* or *Service Option Control Messages* that the base station is required to support is specific to the service option (see the relevant service option descriptions). In addition, the base station shall support one pending *Power Up Function Message*.

3.6.4.1.5 Long Code Transition Request Processing

If a request for voice privacy is specified in the *Origination Message* or *Page Response Message*, the base station may send a *Long Code Transition Request Order* (ORDQ = '00000001') requesting a transition to the private long code.

The base station shall process the *Long Code Transition Request Order* as follows:

- If the *Long Code Transition Request Order* requests a transition to the private long code and the base station accepts the request, the base station shall send a *Long Code Transition Request Order* (ORDQ = '00000001'). If the base station does not accept the private long code transition request, the base station shall send a *Long Code Transition Request Order* (ORDQ = '00000000').
- If the *Long Code Transition Request Order* requests a transition to the public long code and the base station accepts the request, the base station shall send a *Long Code Transition Request Order* (ORDQ = '00000000'). If the base station does not accept the public long code transition request, the base station shall send a *Long Code Transition Request Order* (ORDQ = '00000001').

The base station shall process the *Long Code Transition Response Order* as follows:

- If the *Long Code Transition Response Order* indicates that the mobile station accepts the long code transition requested in the *Long Code Transition Request Order* sent by the base station, the base station shall use the requested long code mask on both the Forward Traffic Channel and the Reverse Traffic Channel. The base station shall specify an explicit action time in the *Long Code Transition Request Order*. The base station shall begin using the requested long code mask using the explicit action time (see 3.6.4.1.4).

3.6.4.1.6 Processing Resource Request Messages

The base station shall process *Resource Request Message* and *Resource Request Mini Message*, as follows:

- The base station may send one of the messages that assign appropriate resources (e.g. *Extended Supplemental Channel Assignment Message*, *Resource Allocation Message*, *Resource Allocation Mini Message*, *Universal Handoff Direction Message*, *Retry Order*, etc) to the mobile station. If the base station sends one of these messages and a Forward Packet Data Channel is not assigned, the base station shall set PILOT_GATING_USE_RATE to ‘0’ and start transmitting the Forward Power Control Subchannel with the maximum rate at the action time of the message.
- The base station may send a *Retry Order* to the mobile station.

3.6.4.1.7 Response to Enhanced Origination Message

If the base station receives an *Enhanced Origination Message*, the base station should perform the following:

- If the base station does not accept this call request from the mobile station, the base station should send one of the following messages:
  - A *Call Assignment Message* to the mobile station, with the RESPONSE_IND field set to ‘1’, the ACCEPT_IND field set to ‘0’, and the TAG field set to the value of the TAG or ADD_TAG field of the *Enhanced Origination Message*.
  - A *Retry Order* if the *Enhanced Origination Message* is for a packet data service option.
- If the base station accepts this call request from the mobile station, the base station should send a *Call Assignment Message*, *Service Connect Message*, or *Universal Handoff Direction Message* (with the Service Configuration information record included) to assign the call:
  - If the GLOBAL_EMERGENCY_CALL indicator is set to ‘1’ and the service associated with this origination is a voice service, the base station shall recognize this as an emergency call and should process the message using an implementation-dependent procedure which may include ignoring the dialed digits. If the base station receives an *Origination Message* and the GLOBAL_EMERGENCY_CALL indicator is set to ‘1’ and the service associated with this origination is not a voice service, the base station may recognize this

as an emergency call and should process the message using an implementation-dependent procedure which may include ignoring the dialed digits.

- If the *Enhanced Origination Message* includes a SYNC_ID field, then based on the value of the SYNC_ID received, the base station may instruct the mobile station to restore one or more of the service option connections from the stored service configuration, and if so, the base station shall send a *Call Assignment Message*, *Universal Handoff Direction Message*, or *Service Connect Message* to the mobile station as follows:
  - If the base station sends a *Call Assignment Message*, the base station shall perform the following:
    - The base station shall set the RESPONSE_IND field to ‘1’, the ACCEPT_IND field to ‘1’, and the TAG field to the value of the TAG or ADD_TAG field of the *Enhanced Origination Message*.
    - The base station shall set the USE_OLD_SERV_CONFIG field to ‘1’.
  - If the base station sends a *Service Connect Message*, the base station shall perform the following:
    - The base station shall set the USE_OLD_SERV_CONFIG field to ‘11’.
  - If the mobile station is to restore all remaining service option connections from the stored service configuration, the base station shall set the SR_ID field to ‘111’; if the mobile station is to restore more than one but not all remaining service option connections from the stored service configuration, the base station shall set the SR_ID field to ‘000’ and the SR_ID_RESTORE_BITMAP field to the bitmap of service reference identifiers corresponding to the service option connections to be restored; otherwise, the base station shall set the SR_ID field to the service reference identifier corresponding to the service option connection to be restored.
  - At the action time corresponding to this message, the base station shall restore the indicated service option connection(s) from the stored service configuration; Layer 3 shall instantiate a Call Control instance (as specified in 3.6.8) for each of the restored service option connections with a ‘restore indication’ and Layer 3 shall identify each of these Call Control instances by the value of the CON_REF field corresponding to the restored service option connection.
- If the base station sends a *Call Assignment Message* to assign the call, the base station shall perform the following:
  - The base station shall set the RESPONSE_IND field to ‘1’, the ACCEPT_IND field to ‘1’, and the TAG field to the value of the TAG or ADD_TAG field of the *Enhanced Origination Message*. The base station shall set the CON_REF_INCL field of the message to ‘1’ and the CON_REF field of the message to the value of the connection reference of the service option connection corresponding to this call.

+ A service option connection corresponding to this call (if not already established) shall be established by performing service negotiation; the base station should initiate service negotiation to establish the service option connection, if permitted by the current service negotiation subfunction.

+ At the action time corresponding to this message, the Layer 3 shall instantiate a Call Control instance (as specified in 3.6.8). The Layer 3 shall identify this Call Control instance by the value of the CON_REF field included in the *Call Assignment Message*.

– If the base station sends a *Service Connect Message* or a *Universal Handoff Direction Message* (with the Service Configuration information record included), to assign the call, the base station shall perform the following:

+ The base station shall set the call control parameters corresponding to this call included in the message as follows: The base station shall set the RESPONSE_IND field to '1', and the TAG field to the value of the TAG or ADD_TAG field of the *Enhanced Origination Message*.

+ At the action time corresponding to this message, the Layer 3 shall instantiate a Call Control instance (as specified in 3.6.8). The Layer 3 shall identify this Call Control instance by the value of the CON_REF assigned to the service option connection corresponding to this call.

3.6.4.1.8 Processing Resource Release Request Message and Resource Release Request Mini Message

The base station may perform the following in response to receiving a *Resource Release Request Message* or a *Resource Release Request Mini Message* from the mobile station:

- If the mobile station requests to release a service option connection, the base station may send a *Service Connect Message, General Handoff Direction Message,* or a *Universal Handoff Direction Message* to release the service option connection.

- If the mobile station requests to commence reverse pilot gating operation, the base station may send a *Extended Release Message, Extended Release Mini Message,* or a *Universal Handoff Direction Message* to instruct the mobile station to commence the reverse pilot gating operation.

3.6.4.1.9 Processing Base Station Status Request Message

If the requested RECORD_TYPE equals '00000000' (Pilot Information), the base station should send a *Base Station Status Response Message* with a RECORD_TYPE of '00000000' (Pilot Information) to the mobile station:

- For each pilot being requested by the mobile station, the base station shall include the corresponding Base Station Identification number.

- If SID and NID information is being requested by the mobile station, the base station shall include the SID and NID information corresponding to these pilots.

- If LAT and LONG information is being requested by the mobile station, the base station should include the LAT and LONG information corresponding to these pilots.

3.6.4.1.10 Base Station assigned PLCM

If PLCM_TYPE field is included in *Extended Channel Assignment Message* or *Universal Handoff Direction Message* and is set to '0001', the base station shall include PLCM_39 field in the message and shall set it as follows:

P_{38} P_{37} are set as specified in the Table 3.6.4.1.10-1:

Table 3.6.4.1.10-1. The Base Station Assigned Public Long Code Mask Type

P_{38} P_{37} (binary)	Descriptions
00	Proprietary Approach
01	Latitude-Longitude Approach
10	Reserved
11	Reserved

If P_{38} P_{37} is equal to '01'; the base station shall set the fields as follows:

P_{36}, P_{35}, P_{34}, P_{33}, P_{32}, P_{31}, P_{30}, P_{29}, P_{28}, P_{27}, P_{26} = ((BASE_LONG>>5) × cos|BASE_LAT|) mod (2^{11}),

P_{25}, P_{24}, P_{23}, P_{22}, P_{21}, P_{20}, P_{19}, P_{18}, P_{17}, P_{16}, P_{15} = (BASE_LAT>>5) mod (2^{11}),

P_{14}, P_{13},..., P_2, P_1, P_0 = identifiers assigned by the base station,

where:

BASE_LONG is the longitude of the base station in units of 0.25 seconds, expressed as a two's complement signed number with positive numbers signifying East longitude, and,

BASE_LAT is the latitude of the base station in units of 0.25 seconds, expressed as a two's complement signed number with positive numbers signifying North latitudes.

3.6.4.2 Traffic Channel Initialization Substate

In this substate, the base station begins transmitting on the Forward Traffic Channel and acquires the Reverse Traffic Channel.

Upon entering the *Traffic Channel Initialization Substate*, the base station shall perform the following:

- Layer 3 shall send an L2-Supervision.Request primitive to Layer 2 to reset the message acknowledgment procedures as specified in [4].
- The base station shall set its Forward and Reverse Traffic Channel long code masks to the public long code mask (see [2]).
- The base station shall set its Forward and Reverse Traffic Channel frame offsets (see [2]) to the frame offset assigned to the mobile station.
- If the base station set the ASSIGN_MODE field of the *Channel Assignment Message* to '000', the base station shall set SERV_NEG to disabled. If the base station set the ASSIGN_MODE field of the *Channel Assignment Message* to '100', the base station shall set SERV_NEG to enabled. For operation in band classes other than Band Class 0, SERV_NEG is always equal to enabled.
- If the base station uses the *Extended Channel Assignment Message*, the base station shall set the SERV_NEG to enabled.
- The base station shall determine the initial service configuration as follows:
  - If SERV_NEG is equal to disabled, the initial service configuration shall include Multiplex Option 1 and Radio Configuration 1 for both the Forward and Reverse Traffic Channels, and shall include no service option connections.
  - If SERV_NEG is equal to enabled and the base station sets the GRANTED_MODE field of the *Channel Assignment Message* or the *Extended Channel Assignment Message* to '00', the initial service configuration shall include the multiplex option and radio configuration for the Forward and Reverse Traffic Channels as specified by the DEFAULT_CONFIG field, and shall include no service option connections.
  - If SERV_NEG is equal to enabled and the base station sets the GRANTED_MODE field of the *Extended Channel Assignment Message* to '01' or '10', the initial service configuration shall include the default Forward and Reverse Traffic Channel multiplex options that are derived from the radio configurations corresponding to Table 3.7.2.3.2.21-3 and shall include no service option connections.

- If SERV_NEG is equal to enabled and the base station sets the GRANTED_MODE field of the *Channel Assignment Message* to '01' or '10', the initial service configuration shall include the default Forward and Reverse Traffic Channel multiplex options and transmission rates corresponding to the service option requested by the mobile station in the *Origination Message*, in the case of a mobile station originated call, or the *Page Response Message*, in the case of a mobile station terminated call, and shall include no service option connections.

- If SERV_NEG is equal to enabled and the base station sets the GRANTED_MODE field of the *Extended Channel Assignment Message* to '11', the base station shall begin to use the stored service configuration corresponding to the SYNC_ID conveyed to the mobile station as the current service configuration and shall begin to process Forward and Reverse Traffic Channel frames accordingly. The set of service option connections to be restored are determined as follows:

  + If the base station sets the SR_ID_RESTORE field of the *Extended Channel Assignment Message* to '111', the base station shall restore all the service option connections from the stored service configuration.

  + If the base station sets the SR_ID_RESTORE field of the *Extended Channel Assignment Message* to '000', the base station shall restore the service option connections indicated by the SR_ID_RESTORE_BITMAP field of the *Extended Channel Assignment Message* from the stored service configuration.

  + Otherwise, the base station shall restore the service option connection corresponding to the SR_ID field of the *Extended Channel Assignment Message* from the stored service configuration.

- If SERV_NEG is equal to disabled, the base station shall activate the *SO Negotiation Subfunction* (see 3.6.4.1.2.2.6); otherwise, the base station shall activate the *Normal Service Subfunction* (see 3.6.4.1.2.2.1).

- The base station shall set PILOT_GATING_USE_RATE to '0'.

While in the *Traffic Channel Initialization Substate*, the base station shall perform the following:

- If the Forward Fundamental Channel is assigned, the base station shall transmit null Traffic Channel data on the Forward Fundamental Channel, except when transmitting signaling traffic.

- If F-CPCCH is assigned, the base station shall transmit power control bits on the F-CPCCH; otherwise, if FPC_PRI_CHAN is set to '0', the base station shall transmit power control bits on the Forward Fundamental Channel. If FPC_PRI_CHAN is set to '1', the base station shall transmit power control bits on the Forward Dedicated Control Channel.

- If the base station acquires the Reverse Traffic Channel, Layer 3 shall send a reverse dedicated channel acquired indication to Layer 2 (see [4]). The base station shall perform the following:
  - If SERV_NEG is equal to enabled and the base station sets the GRANTED_MODE field of the *Extended Channel Assignment Message* to '11', the base station shall perform the following:
    - For each service option connection (with corresponding connection reference CON_REF_i) in the stored service configuration record, Layer 3 shall instantiate a Call Control instance (as specified in 3.6.8) with a 'restore indication'. The base station shall identify each of these Call Control instances by the corresponding CON_REF_i. Furthermore, the base station shall also identify the Call Control instance corresponding to the first service option connection listed in this restored Service Configuration information record by the NULL identifier.
  - Otherwise, the base station shall perform the following:
    - The Layer 3 shall instantiate a Call Control instance (as specified in 3.6.8). The Layer 3 shall assign the default identifier of NULL to this Call Control instance. The Layer 3 shall enter the *Traffic Channel Substate*.

- If the base station fails to acquire the Reverse Traffic Channel, the base station should perform one of the following:
  - retransmit the *Channel Assignment Message* or the *Extended Channel Assignment Message* on the Paging Channel and remain in the *Traffic Channel Initialization Substate*
  - retransmit the *Extended Channel Assignment Message* on the Forward Common Control Channel and remain in the *Traffic Channel Initialization Substate*, or
  - disable transmission on the Forward Traffic Channel and discontinue the *Traffic Channel Processing* for the mobile station.

3.6.4.3 Traffic Channel Substate

In this substate, the base station may exchange Traffic Channel frames with the mobile station in accordance with the current service configuration.

Upon entering the *Traffic Channel Substate*, the base station shall perform the following:

- If SERV_NEG is equal to enabled and the base station sets the GRANTED_MODE field of the *Extended Channel Assignment Message* to '11', the base station should not send a *Service Connect Message* to the mobile station.

- If the call is a mobile station terminated call and the base station set BYPASS_ALERT_ANSWER to '0', the base station shall perform the following:

- If SERV_NEG is equal to disabled, the base station shall process the service option request specified in the *Page Response Message* in accordance with the requirements for the active service subfunction (see 3.6.4.1.2.2).
- If SERV_NEG is equal to enabled and the base station sets the GRANTED_MODE field of the *Channel Assignment Message* or the *Extended Channel Assignment Message* to '00' or '01', the base station should initiate service negotiation to request a service configuration in accordance with the requirements for the active service subfunction (see 3.6.4.1.2.2).
- If SERV_NEG is equal to enabled and the base station sets the GRANTED_MODE field of the *Channel Assignment Message* or the *Extended Channel Assignment Message* to '10', the base station should send a *Service Connect Message* in accordance with the requirements for the active service subfunction (see 3.6.4.1.2.2).

• Otherwise, the base station shall perform the following:

- If SERV_NEG equals enabled, the call is mobile-station-originated and the base station sets the GRANTED_MODE field of the *Channel Assignment Message* or the *Extended Channel Assignment Message* to '10', the base station should send a *Service Connect Message* in accordance with the requirements for the active service subfunction (see 3.6.4.1.2.2).
- If SERV_NEG equals disabled and the call is mobile-station-originated, the base station shall process the service option request specified in the *Origination Message* in accordance with the requirements for the active service subfunction (see 3.6.4.1.2.2).

While in the *Traffic Channel Substate*, the base station shall perform the following:

• The base station shall transmit the power control subchannel as specified in [2].

• The base station shall process Forward and Reverse Traffic Channel frames in accordance with the requirements for the active service subfunction (see 3.6.4.1.2.2).

• When PILOT_GATING_USE_RATE is equal to '0' and the base station is to establish a Forward or Reverse Fundamental Channel or a Forward or Reverse Dedicated Control Channel, or a Forward Packet Data Channel, the base station shall send a *Universal Handoff Direction Message* to the mobile station.

• When a Forward Packet Data Channel is not assigned, PILOT_GATING_USE_RATE is equal to '1' and the base station has data to send, the base station may send a *Resource Allocation Message, Resource Allocation Mini Message, Extended Supplemental Channel Assignment Message, Forward Supplemental Channel Assignment Mini Message, Reverse Supplemental Channel Assignment Mini Message, or Universal Handoff Direction Message* and set PILOT_GATING_USE_RATE to '0' to start transmitting the Forward Power Control Subchannel with the maximum rate at the action time of the message and start the exchange of user information.

- When a Forward Packet Data Channel is assigned, PILOT_GATING_USE_RATE is equal to ‘1’, and the base station has data or signaling messages to send, the base station may transition to the Active Mode. If the base station determines to transition to the Active Mode, the base station shall perform the following:
  - If a Forward Dedicated Control Channel is assigned, the base station shall perform one of the following:
    - The base station shall send a *Resource Allocation Message, Resource Allocation Mini Message, Extended Supplemental Channel Assignment Message, Forward Supplemental Channel Assignment Mini Message, Reverse Supplemental Channel Assignment Mini Message*, or *Universal Handoff Direction Message* and set PILOT_GATING_USE_RATE to ‘0’ at the action time of the message, or
    - The base station shall set PILOT_GATING_USE_RATE to ‘0’ (see [3]).
  - Otherwise (i.e., Forward Dedicated Control Channel is not assigned), the base station shall set PILOT_GATING_USE_RATE to ‘0’.
- When a Forward Packet Data Channel is assigned, PILOT_GATING_USE_RATE is equal to ‘1’, and the base station has detected continuous reverse pilot channel or a valid Reverse Fundicated Channel frame is received, the base station shall set PILOT_GATING_USE_RATE to ‘0’.
- If the base station is to release any but not all traffic channels, the base station shall send a *Universal Handoff Direction Message, Extended Release Message*, or an *Extended Release Mini Message* to the mobile station.
- If the base station is to assign R-FCH, the base station may send a *Universal Handoff Direction Message* or *Shared Channel Configuration Order* (ORDQ = 00000000) to the mobile station. If the base station is to release R-FCH, the base station may send a *Universal Handoff Direction Message, Extended Release Message, Extended Release Mini Message*, or *Shared Channel Configuration Order* (ORDQ = 00000001) to the mobile station.
- When PILOT_GATING_USE_RATE is equal to ‘0’, the base station does not have any data to send, and the base station has determined that the mobile station does not have any data to send, then the base station may send an *Extended Release Message, Extended Release Mini Message or Universal Handoff Direction Message*. At the action time of the message, the base station may perform the following:
  - Set PILOT_GATING_USE_RATE to ‘1’.
  - If the channel configuration in the message does not include a Forward Packet Data Channel, start transmitting the Forward Power Control Subchannel with the specified rate and stop the exchange of user information.
  - If the channel configuration in the message includes a Forward Packet Data Channel, stop the exchange of user information and signaling messages.

- If the base station declares a loss of Reverse Traffic Channel continuity (see 3.4), the base station should send a *Release Order* to the mobile station. If the base station sends a *Release Order*, the Layer 3 shall send a "release indication" to all Call Control instances, and shall enter the *Release Substate*.
- The base station may perform Forward Traffic Channel power control as specified in 3.6.4.1.1.
- The base station may request a new service configuration by initiating service negotiation or service option negotiation in accordance with the requirements for the active service subfunction (see 3.6.4.1.2.2).
- The base station may send a *Service Option Control Message* or *Service Option Control Order* to invoke a service option specific function in accordance with the requirements for the active service subfunction (see 3.6.4.1.2.2).
- The base station may request a long code transition, as specified in 3.6.4.1.5, either autonomously or in response to a request for voice privacy specified in the *Origination Message* or *Page Response Message*.
- The base station may perform authentication procedures as specified in 3.3.1.
- The base station may perform TMSI assignment procedures (see 2.3.15).
- For the first call, if the call is mobile-station-originated and the PACA_REORIG field of the *Origination Message* is equal to '1', the Layer 3 shall send a "paca reorig indication" to the Call Control instance.
- The base station may control operation of the Forward or Reverse Supplemental Code Channels by including Supplemental Code Channel assignment information in the *Supplemental Channel Assignment Message*, or the *General Handoff Direction Message*.
- If neither a Forward Fundamental Channel, nor a Forward Dedicated Control Channel is assigned, the base station shall not assign a Forward Supplemental Channels to the mobile station.
- If a Reverse Packet Data Channel is assigned, the base station shall not assign a Reverse Supplemental Channel to the mobile station.
- The base station may control operation of the Forward or Reverse Supplemental Channels by including Supplemental Channel assignment information in the *Extended Supplemental Channel Assignment Message*, the *Forward Supplemental Channel Assignment Mini Message*, or the *Reverse Supplemental Channel Assignment Mini Message*.
- The base station may assign a new call by sending a *Call Assignment Message*, *Service Connect Message*, or *Universal Handoff Direction Message* (with the Service Configuration information record included) to assign the call:
  - If the base station sends a *Call Assignment Message* to assign the call, the base station shall perform the following:
    - The base station shall set the RESPONSE_IND field to '0'.

+ The base station shall set the CON_REF_INCL field of the message to ‘1’ and the CON_REF field of the message to the value of the connection reference of the service option connection corresponding to this call.

+ A service option connection corresponding to this call (if not already established) shall be established by performing service negotiation; the base station should initiate service negotiation to establish the service option connection, if permitted by the current service negotiation subfunction.

+ At the action time corresponding to this message, the Layer 3 shall instantiate a Call Control instance (as specified in 3.6.8). The Layer 3 shall identify this Call Control instance by the value of the CON_REF field included in the *Call Assignment Message*.

– If the base station sends a *Service Connect Message* or *Universal Handoff Direction Message* (with the Service Configuration information record included) to assign the call, the base station shall perform the following:

+ The base station shall set the call control parameters corresponding to this call included in the message as follows: The base station shall set the RESPONSE_IND field to ‘0’, and the BYPASS_ALERT_ANSWER field as required.

+ At the action time corresponding to this message, the Layer 3 shall instantiate a Call Control instance (as specified in 3.6.8). The Layer 3 shall identify this Call Control instance by the value of the CON_REF assigned to the service option connection corresponding to this call.

• The base station may instruct the mobile station to restore one or more of the service option connection records from the stored service configuration by sending a *Call Assignment Message* or *Service Connect Message* as follows:

– If the base station sends a *Call Assignment Message*, the base station shall perform the following:

+ The base station shall set the RESPONSE_IND field to ‘1’, the ACCEPT_IND field to ‘1’, and the TAG field to the value of the TAG field of the *Enhanced Origination Message*.

+ The base station shall set the USE_OLD_SERV_CONFIG field to ‘1’.

– If the base station sends a *Service Connect Message*, the base station shall perform the following:

+ The base station shall set the USE_OLD_SERV_CONFIG field to ‘11’.

- If the mobile station is to restore all remaining service option connection records from the stored service configuration, the base station shall set the SR_ID field to '111'; otherwise, the base station shall set the SR_ID field to the service reference identifier corresponding to the service option connection record to be restored.

- At the action time corresponding to this message, the base station shall restore the indicated service option connection record(s) from the stored service configuration; Layer 3 shall instantiate a Call Control instance (as specified in 3.6.8) for each of the restored service option connections with a 'restore indication' and Layer 3 shall identify each of these Call Control instances by the value of the CON_REF field corresponding to the restored service option connection.

- If the Layer 3 receives a 'call release request' from a Call Control instance, the Layer 3 shall perform the following:

  - If the service option connection corresponding to this call is the only one connected, the base station should send the mobile station a *Release Order* and enter the *Release Substate*.
  - If the service option connection corresponding to this call is not the only one connected, the base station should release this service option connection. At the action time of the message, the Layer 3 shall terminate this Call Control instance.

- The base station may send the following messages. Some of these messages are generated by the Call Control Instance. If the base station sends a message, the base station shall comply with the specified requirements for sending the message, if any:

  1. *Alert With Information Message:*
  2. *Reserved*
  3. *Audit Order*
  4. *Authentication Challenge Message*
  5. *Base Station Challenge Confirmation Order*
  6. *Base Station Status Response Message*
  7. *Call Assignment Message*
  8. *Candidate Frequency Search Request Message*
  9. *Candidate Frequency Search Control Message*
  10. *Continuous DTMF Tone Order*
  11. *Data Burst Message*
  12. *Extended Alert With Information Message*

13. *Extended Flash With Information Message*
14. *Extended Handoff Direction Message*
15. *Extended Neighbor List Update Message*
16. *Extended Release Message*: If the physical channels indicated in CH_IND field of this message includes all the physical channels currently being processed by the mobile station, the Layer 3 shall send a "release indication" to all Call Control instances, and shall enter the *Release Substate*.
17. *Extended Release Mini Message*: If the physical channels indicated in CH_IND field of this message includes all the physical channels currently being processed by the mobile station, the Layer 3 shall send a "release indication" to all Call Control instances, and shall enter the *Release Substate*.
18. *Extended Supplemental Channel Assignment Message*
19. *Forward Supplemental Channel Assignment Mini Message*
20. *General Handoff Direction Message*
21. *Flash With Information Message*
22. *In-Traffic System Parameters Message*[3]
23. *Local Control Order*
24. *Lock Until Power-Cycled Order*: The base station should send this order in unassured mode.
25. *Long Code Transition Request Order*
26. *Maintenance Order*
27. *Maintenance Required Order*
28. *Message Encryption Mode Order*
29. *Mobile Assisted Burst Operation Parameters Message*
30. *Mobile Station Registered Message*
31. *Neighbor List Update Message*: The base station shall not send this message if P_REV_IN_USE is greater than or equal to eight.
32. *Parameter Update Order* (see 2.3.12.1.3).
33. *Periodic Pilot Measurement Request Order*
34. *Pilot Measurement Request Order*

---

[3] If the base station determines that the current P_REV_IN_USE is less than or equal to three, the base station does not send an *In-Traffic System Parameters Message* to change the P_REV_IN_USE to greater than or equal to nine.

35. *Power Control Message*
36. *Power Control Parameters Message*
37. *Power Up Function Message*
38. *Power Up Function Completion Message*
39. *Resource Allocation Message*
40. *Resource Allocation Mini Message*
41. *Release Order:* The Layer 3 shall send a "release indication" to all Call Control instances, and shall enter the *Release Substate*.
42. *Retrieve Parameters Message*
43. *Retry Order*
44. *Reverse Supplemental Channel Assignment Mini Message*
45. *Security Mode Command Message*
46. *Send Burst DTMF Message*
47. *Service Connect Message:* The base station shall send the message in accordance with the requirements for the active service subfunction (see 3.6.4.1.2.2).
48. *Service Option Control Message:* The base station shall send the message in accordance with the requirements for the active service subfunction (see 3.6.4.1.2.2).
49. *Service Option Control Order*
50. *Service Option Request Order*
51. *Service Option Response Order*
52. *Service Redirection Message:* The Layer 3 shall send a "release indication" to all Call Control instances, and shall enter the *Release Substate*.
53. *Service Request Message:* The base station shall send the message in accordance with the requirements for the active service subfunction (see 3.6.4.1.2.2).
54. *Service Response Message:* The base station shall send the message in accordance with the requirements for the active service subfunction (see 3.6.4.1.2.2).
55. *Set Parameters Message*
56. *SSD Update Message*
57. *Status Request Message*
58. *Status Request Order*: The base station shall not send this message if P_REV_IN_USE is greater than or equal to eight.
59. *Supplemental Channel Assignment Message*

60. *TMSI Assignment Message*
61. *Universal Handoff Direction Message*
62. *User Zone Reject Message*
63. *User Zone Update Message*
64. *Radio Configuration Parameters Message*
65. *Handoff Supplementary Information Solicit Message*
66. *General Extension Message :* The base station may send this message in order to extend the above messages with additional records.

- If the base station receives one of the following messages from the mobile station, the base station shall process the message according to the specified requirements, if any:

1. *Base Station Challenge Order:* The base station shall process the message as described in 2.3.12.1.5.
2. *Base Station Status Request Message*: The base station shall process the message as described in 3.6.4.1.9
3. *Call Cancel Message*
4. *Candidate Frequency Search Report Message*: The base station shall process the message as described in 3.6.6.2.2.6.
5. *Candidate Frequency Search Response Message*: The base station shall process the message as described in 3.6.6.2.2.4.
6. *CDMA Off Time Report Message*
7. *Connect Order:* If the CON_REF_INCL field is not included in this message or if the CON_REF_INCL field equals ‘0’, the Layer 3 shall deliver this message to the Call Control instance identified by NULL; otherwise, the Layer 3 shall deliver this message to the Call Control instance identified by CON_REF.
8. *Continuous DTMF Tone Order:* If the CON_REF_INCL field is not included in this message or if the CON_REF_INCL field equals ‘0’, the Layer 3 shall deliver this message to the Call Control instance identified by NULL; otherwise, the Layer 3 shall deliver this message to the Call Control instance identified by CON_REF.
9. *Data Burst Message*: The base station may respond with a *Retry Order*.
10. *Enhanced Origination Message*: The base station shall process the message as described in 3.6.4.1.7.
11. *Extended Flash With Information Message*: If CON_REF_INCL equals ‘0’, the Layer 3 shall deliver this message to the Call Control instance identified by NULL; otherwise, the Layer 3 shall deliver this message to the Call Control instance identified by CON_REF.
12. *Extended Handoff Completion Message*: The base station shall process the message as described in 3.6.6.2.2.7.

13. *Extended Pilot Strength Measurement Message*: The base station shall process the message as described in 3.6.6.2.2.1.
14. *Extended Release Response Message*.
15. *Extended Release Response Mini Message*.
16. *Flash With Information Message*: The Layer 3 shall deliver this message to the Call Control instance identified by NULL.
17. *Handoff Completion Message*: The base station shall process the message as described in 3.6.6.2.2.7.
18. *Local Control Response Order*
19. *Long Code Transition Request Order*: The base station shall process the message as described in 3.6.4.1.5.
20. *Long Code Transition Response Order*
21. *Mobile Station Reject Order*: If the CON_REF_INCL field is included in this message, Layer 3 shall perform the following: if the CON_REF_INCL field equals '0', Layer 3 shall send a 'messages rejected indication' to the Call Control instance identified by NULL; otherwise, Layer 3 shall send a 'messages rejected indication' to the Call Control instance identified by CON_REF.
22. *Origination Continuation Message*: The Layer 3 shall deliver this message to the Call Control instance identified by NULL.
23. *Outer Loop Report Message*
24. *Parameters Response Message*
25. *Parameter Update Confirmation Order*
26. *Periodic Pilot Strength Measurement Message*
27. *Pilot Strength Measurement Message*: The base station shall process the message as described in 3.6.6.2.2.1.
28. *Pilot Strength Measurement Mini Message*
29. *Power Measurement Report Message*: The base station may process the message as described in 3.6.4.1.1.
30. *Release Order*: The base station shall send the mobile station a *Release Order* within T2b seconds, and the Layer 3 shall send a "release indication" to all Call Control instances, and enter the *Release Substate*; otherwise, the Layer 3 shall send a "send alert with info message indication" to all Call Control instances.
31. *Resource Release Request Message*: The base station shall process the message as described in 3.6.4.1.8.
32. *Resource Release Request Mini Message*: The base station shall process the message as described in 3.6.4.1.8.

33. *Resource Request Message*: The base station shall process the message as described in 3.6.4.1.6.

34. *Resource Request Mini Message*: The base station shall process the message as described in 3.6.4.1.6.

35. *Reserved*.

36. *Reserved*.

37. *Reserved*.

38. *Send Burst DTMF Message*: If the CON_REF_INCL field is not included in this message or if the CON_REF_INCL field equals '0', the Layer 3 shall deliver this message to the Call Control instance identified by NULL; otherwise, the Layer 3 shall deliver this message to the Call Control instance identified by CON_REF.

39. *Service Connect Completion Message*: The base station shall process the message in accordance with the requirements for the active service subfunction (see 3.6.4.1.2.2).

40. *Service Option Control Message:* The base station shall process the message in accordance with the requirements for the active service subfunction (see 3.6.4.1.2.2).

41. *Service Option Control Order*: The base station shall process the message in accordance with the requirements for the active service subfunction (see 3.6.4.1.2.2).

42. *Service Option Request Order*: The base station shall process the message in accordance with the requirements for the active service subfunction (see 3.6.4.1.2.2).

43. *Service Option Response Order*: The base station shall process the message in accordance with the requirements for the active service subfunction (see 3.6.4.1.2.2).

44. *Service Request Message*: The base station shall process the message in accordance with the requirements for the active service subfunction (see 3.6.4.1.2.2).

45. *Service Response Message*: The base station shall process the message in accordance with the requirements for the active service subfunction (see 3.6.4.1.2.2).

46. *SSD Update Confirmation Order*

47. *SSD Update Rejection Order*

48. *Status Response Message*

49. *Status Message*

50. *Supplemental Channel Request Message*: The base station may respond with a *Supplemental Channel Assignment Message*, an *Extended Supplemental Channel Assignment Message*, or a *Retry Order*.

51. *Supplemental Channel Request Mini Message*: The base station may respond with a *Forward Supplemental Channel Assignment Mini Message* or a *Reverse Supplemental Channel Assignment Mini Message*, or both. The base station may also respond with a *Retry Order*.

52. *TMSI Assignment Completion Message*

53. *User Zone Update Request Message*: The base station shall process this message as specified in 3.6.7.2.

54. *Handoff Supplementary Information Notification Message*: The base station shall process this message as specified in 3.6.6.2.2.16.

55. *General Extension Message:* The base station shall store the records and process the message included in the *General Extension Message*.

3.6.4.4 Release Substate

In this substate, the base station disconnects all calls and physical channels.

While in the *Release Substate*, the base station shall perform the following:

- The base station shall transmit the power control subchannel as specified in [2].
- The base station shall transmit on the Forward Traffic Channel for at least T_{3b} seconds. The base station shall transmit null traffic and power control bits on the Forward Fundamental Channel, except when transmitting signaling traffic, if the Fundamental Channel is present or transmit power control bits on the Forward Dedicated Control Channel, if only the dedicated Control Channel is present. After T_{3b} seconds, the base station should stop transmitting on the Forward Traffic Channel.
- When a Forward Packet Data Channel and a Forward Common Power Control Channel subchannel are assigned to this mobile station, the base station shall transmit on the Forward Common Power Control Channel subchannel for at least T_{3b} seconds. After T_{3b} seconds, the base station should stop transmitting on the Forward Common Power Control Channel subchannel. If no response is received to the Layer 3 message sent to the mobile station to release the call, the base station should wait T_{5b} before assigning this Forward Common Power Control Channel subchannel to another mobile station.
- The base station shall process Reverse Traffic Channel signaling traffic and may discard other types of Reverse Traffic Channel traffic.
- The base station may perform TMSI assignment procedures (see 2.3.15).
- The base station may perform Forward Traffic Channel power control as specified in 3.6.4.1.1.
- The base station may send a *Service Option Control Message* to invoke a service option specific function in accordance with the requirements for the active service subfunction (see 3.6.4.1.2.2).

- The base station may send the following messages. Some of these messages are generated by the Call Control Instance. If the base station sends a message, the base station shall comply with the specified requirements for sending the message, if any.

  1. *Alert With Information Message*
  2. *Audit Order*
  3. *Candidate Frequency Search Request Message*
  4. *Candidate Frequency Search Control Message*
  5. *Data Burst Message*
  6. *Extended Alert With Information Message*
  7. *Extended Handoff Direction Message*
  8. *Extended Neighbor List Update Message*
  9. *Extended Release Message*
  10. *Extended Supplemental Channel Assignment Message*
  11. *Forward Supplemental Channel Assignment Mini Message*
  12. *General Handoff Direction Message*
  13. *In-Traffic System Parameters Message*[4]
  14. *Local Control Order*
  15. *Lock Until Power-Cycled Order*: The base station should send this order in unassured mode.
  16. *Maintenance Order*
  17. *Maintenance Required Order*
  18. *Mobile Assisted Burst Operation Parameters Message*
  19. *Mobile Station Registered Message*
  20. *Neighbor List Update Message*: The base station shall not send this message if P_REV_IN_USE is greater than or equal to eight.
  21. *Parameter Update Order* (see 2.3.12.1.3 or 3.7.4).
  22. *Power Control Message*
  23. *Power Control Parameters Message*

---

[4] If the base station determines that the current P_REV_IN_USE is less than or equal to three, the base station does not send an *In-Traffic System Parameters Message* to change the P_REV_IN_USE to greater than or equal to nine.

24. *Power Up Function Message*
25. *Power Up Function Completion Message*
26. *Release Order*
27. *Resource Allocation Message*
28. *Resource Allocation Mini Message*
29. *Resource Release Request Message*
30. *Resource Release Request Mini Message*
31. *Resource Request Message*
32. *Resource Request Mini Message*
33. *Retrieve Parameters Message*
34. *Reverse Supplemental Channel Assignment Mini Message*
35. *Service Option Control Message:* The base station shall send the message in accordance with the requirements for the active service subfunction (see 3.6.4.1.2.2).
36. *Service Option Control Order*
37. *Status Request Message*
38. *Status Request Order*: The base station shall not send this message if P_REV_IN_USE is greater than or equal to eight.
39. *Supplemental Channel Assignment Message*
40. *TMSI Assignment Message*
41. *Universal Handoff Direction Message*
42. *User Zone Reject Message*
43. *User Zone Update Message*
44. *General Extension Message :* The base station may send this message in order to extend the above messages with additional records.

- If the base station receives one of the following messages from the mobile station, the base station shall process the message according to the specified requirements, if any:

  1. *Base Station Challenge Order:* The base station shall process the message as described in 2.3.12.1.5.
  2. *Call Cancel Message*
  3. *Candidate Frequency Search Report Message*: The base station shall process the message as described in 3.6.6.2.2.6.
  4. *Candidate Frequency Search Response Message*: The base station shall process the message as described in 3.6.6.2.2.4.

5. *Connect Order*: If the CON_REF_INCL field is not included in this message or if the CON_REF_INCL field equals '0', the Layer 3 shall deliver this message to the Call Control instance identified by NULL; otherwise, the Layer 3 shall deliver this message to the Call Control instance identified by CON_REF.

6. *Continuous DTMF Tone Order*: If the CON_REF_INCL field is not included in this message or if the CON_REF_INCL field equals '0', the Layer 3 shall deliver this message to the Call Control instance identified by NULL; otherwise, the Layer 3 shall deliver this message to the Call Control instance identified by CON_REF.

7. *Data Burst Message*

8. *Enhanced Origination Message*

9. *Extended Flash With Information Message*: If CON_REF_INCL equals '0', the Layer 3 shall deliver this message to the Call Control instance identified by NULL; otherwise, the Layer 3 shall deliver this message to the Call Control instance identified by CON_REF.

10. *Extended Handoff Completion Message:* The base station shall process the message as described in 3.6.6.2.2.7.

11. *Extended Pilot Strength Measurement Message:* The base station shall process the message as described in 3.6.6.2.2.1.

12. *Extended Release Response Message*:

13. *Flash With Information Message*: The Layer 3 shall deliver this message to the Call Control instance identified by NULL.

14. *Handoff Completion Message:* The base station shall process the message as described in 3.6.6.2.2.7.

15. *Local Control Response Order*

16. *Long Code Transition Request Order*

17. *Long Code Transition Response Order*

18. *Mobile Station Reject Order*: If the CON_REF_INCL field is included in this message, Layer 3 shall perform the following: if the CON_REF_INCL field equals '0', Layer 3 shall send a 'messages rejected indication' to the Call Control instance identified by NULL; otherwise, Layer 3 shall send a 'messages rejected indication' to the Call Control instance identified by CON_REF.

19. *Origination Continuation Message*: The Layer 3 shall deliver this message to the Call Control instance identified by NULL.

20. *Parameter Update Confirmation Order*

21. *Parameters Response Message*

22. *Periodic Pilot Strength Measurement Message*

23. *Pilot Strength Measurement Message:* The base station shall process the message as described in 3.6.6.2.2.1.
24. *Power Measurement Report Message*
25. *Release Order*
26. *Reserved*
27. *Reserved*
28. *Reserved*
29. *Send Burst DTMF Message*: If the CON_REF_INCL field is not included in this message or if the CON_REF_INCL field equals '0', the Layer 3 shall deliver this message to the Call Control instance identified by NULL; otherwise, the Layer 3 shall deliver this message to the Call Control instance identified by CON_REF.
30. *Service Connect Completion Message*
31. *Service Option Control Message:* The base station shall process the message in accordance with the requirements for the active service subfunction (see 3.6.4.1.2.2).
32. *Service Option Control Order*
33. *Service Option Request Order*
34. *Service Option Response Order*
35. *Service Request Message*
36. *Service Response Message:*
37. *SSD Update Confirmation Order*
38. *SSD Update Rejection Order*
39. *Status Response Message*
40. *Status Message*
41. *TMSI Assignment Completion Message*
42. *User Zone Update Request Message*: The base station shall process this message as specified in 3.6.7.2.
43. *General Extension Message:* The base station shall store the records and process the message included in the *General Extension Message*.

3.6.5 Registration

Registration is the process by which a mobile station notifies the base station of its location, status, identification, slot cycle, and other characteristics. The base station can make use of location information to efficiently page the mobile station when establishing a mobile station terminated call. Registration also provides the mobile station's SLOT_CYCLE_INDEX parameter so that the base station can determine which Paging Channel or Forward Common Control Channel slots a mobile station operating in the

slotted mode is monitoring. Registration also provides the protocol revision number so that the base station knows the capabilities of the mobile station.

The CDMA system supports eleven different forms of registration:

1. Power-up registration. The mobile station registers when it powers on.
2. Power-down registration. The mobile station registers when it powers off if previously registered in the current serving system.
3. Timer-based registration. The mobile station registers when a timer expires.
4. Distance-based registration. The mobile station registers when the distance between the current base station and the base station in which it last registered exceeds a threshold.
5. Zone-based registration. The mobile station registers when it enters a new zone.
6. Parameter-change registration. The mobile station registers when certain of its stored parameters change or when it enters a new system.
7. Ordered registration. The mobile station registers when the base station requests it.
8. Implicit registration. When a mobile station successfully sends an *Origination Message*, *Reconnect Message*, *Call Recovery Request Message*, or *Page Response Message*, the base station can infer the mobile station's location. This is considered an implicit registration.
9. Traffic Channel registration. Whenever the base station has registration information for a mobile station that has been assigned to a Traffic Channel, the base station can notify the mobile station that it is registered.
10. User Zone Registration. The mobile station registers when it selects an active User Zone (see 2.6.9.1.2).
11. Encryption/Message Integrity re-sync required registration. The mobile station registers when extended encryption is turned on and the mobile station determines that it can not decrypt any messages from the base station (see 2.3.12.4.1.3) or the mobile station registers when message integrity is supported and the mobile station determines that it can not validate the MACI of any messages from the base station.

The first five forms of registration, User Zone Registration, and Encryption/Message Integrity re-sync required registration, as a group, are called autonomous registration and are conditioned, in part, by roaming status and by indicators contained in the *System Parameters Message* and *ANSI-41 System Parameters Message* (see 2.6.5.3). The base station may initiate ordered registration through the *Registration Request Order*.

The base station can obtain registration information by sending the *Status Request Message* to the mobile station on the Paging Channel, the Forward Common Control Channel, or the Forward Traffic Channel. If the base station is operating with the mobile station in Band Class 0, the base station can also obtain registration information by sending the *Status Request Order* to the mobile station on the Forward Traffic Channel.

The base station may notify the mobile station that it is registered through the *Mobile Station Registered Message*.

3.6.5.1 Registration on the Common Channels

The base station shall specify the forms of registration that are enabled, the corresponding registration parameters, and the roaming status conditions for which registration is enabled in the *System Parameters Message* and *ANSI-41 System Parameters Message*. If any of the autonomous registration forms are enabled, the base station should also enable parameter-change registration.

The base station should process an *Origination Message*, *Reconnect Message*, *Call Recovery Request Message*, or *Page Response Message* sent on the r-csch as an implicit registration of the mobile station sending the message. The base station can obtain complete registration information about the mobile station at any time by sending a *Registration Request Order* to the mobile station.

3.6.5.2 Registration on the Traffic Channels

The base station can obtain registration information from a mobile station on the Traffic Channel by means of the *Status Request Message* or the *Status Request Order*. When the base station has registration information for a mobile station, the base station may send a *Mobile Station Registered Message* to the mobile station, specifying the base station's registration system, zone, and location information.

3.6.6 Handoff Procedures

3.6.6.1 Overview

3.6.6.1.1 Types of Handoff

The base station supports the following three handoff procedures:

- *Soft Handoff:* A handoff in which a new base station commences communications with the mobile station without interrupting the communications with the old base station. The base station[5] can direct the mobile station to perform a soft handoff only when all Forward Traffic Channels assigned to the mobile station have identical band classes, frequency assignments and frame offsets. Soft handoff provides diversity of Forward Traffic Channels and Reverse Traffic Channel paths on the boundaries between base stations.
- *CDMA-to-CDMA Hard Handoff:* A handoff in which the base station directs the mobile station to transition between disjoint sets of base stations, different band classes, different frequency assignments, or different frame offsets.

[5]In this section the term base station may imply multiple cells or sectors.

Base station support of CDMA-to-CDMA hard handoff between different band classes is optional.

Section 2.6.6 describes the mobile station requirements during handoff.

3.6.6.1.2 Active Set

The Active Set contains the pilots (see 2.6.6.1.2) associated with the Forward Traffic Channels assigned to the mobile station. Initially the base station informs the mobile station of the contents of the Active Set using the *Channel Assignment Message* or the *Extended Channel Assignment Message;* subsequent changes to the contents of the Active Set are provided using the *Extended Handoff Direction Message*, *General Handoff Direction Message*, or *Universal Handoff Direction Message*.

3.6.6.2 Requirements

3.6.6.2.1 Overhead Information

The base station sends the following messages governing the pilot search procedures performed by the mobile station:

- *System Parameters Message*
- *In-Traffic System Parameters Message*
- *Neighbor List Message*
- *Extended Neighbor List Message*
- *Neighbor List Update Message*
- *Extended Neighbor List Update Message*
- *General Neighbor List Message*
- *General Handoff Direction Message*
- *Extended Handoff Direction Message*
- *Candidate Frequency Search Request Message*
- *Candidate Frequency Search Control Message*
- *Universal Handoff Direction Message*
- *Universal Neighbor List Message*
- *MC-RR Parameters Message*

3.6.6.2.1.1 System Parameters

The base station sends handoff related parameters on the Paging Channel in the *System Parameters Message* and the *Extended System Parameters Message*, and on the Primary Broadcast Control Channel in the *MC-RR Parameters Message*.

The base station may revise handoff related parameters for a mobile station operating on the Traffic Channel by sending the *In-Traffic System Parameters Message*.

The base station may modify the values of the parameters SRCH_WIN_A, T_ADD, T_DROP, T_COMP, and T_TDROP through the *Extended Handoff Direction Message*, the *General Handoff Direction Message*, or the *Universal Handoff Direction Message*. In addition, the base station may also modify the values of the parameters SRCH_WIN_N, SRCH_WIN_R, SOFT_SLOPE, ADD_INTERCEPT, DROP_INTERCEPT, and T_TDROP_RANGE through the *General Handoff Direction Message* or the *Universal Handoff Direction Message*.

3.6.6.2.1.2 Neighbor List

The base station sends a Neighbor List on the Paging Channel in the *Neighbor List Message*, the *Extended Neighbor List Message*, or the *General Neighbor List Message*. The base station should list the pilots in the *Neighbor List Message* in descending priority order (see 2.6.6.2.6.3).

The base station may revise the Neighbor List for a mobile station operating on the Traffic Channel by sending a *Neighbor List Update Message* or an *Extended Neighbor List Update Message*.

The base station shall not include a pilot that is a member of the mobile station's Active Set in a *Neighbor List Update Message* or an *Extended Neighbor List Update Message*. The base station shall not specify more than N_{8m} pilots in the *Neighbor List Message*, *Extended Neighbor List Message*, *General Neighbor List Message*, or in the *Extended Neighbor List Update Message*. The base station shall not specify more than 20 pilots in the *Neighbor List Update Message*. The base station should list the pilots in the *Neighbor List Update Message* in descending priority order (see 2.6.6.2.6.3).

3.6.6.2.1.3 Candidate Frequency Neighbor List

The base station sends a Candidate Frequency Neighbor List and inter-frequency hard handoff related parameters in the *Candidate Frequency Search Request Message*. The base station shall not specify more than N_{8m} pilots in the *Candidate Frequency Search Request Message*.

3.6.6.2.1.4 Candidate Frequency Search List

The base station designates a subset of the Candidate Frequency Neighbor List included in the *Candidate Frequency Search Request Message* as the Candidate Frequency Search List. For each pilot belonging to the Candidate Frequency Search List, the base station shall set the corresponding SEARCH_SET field of the *Candidate Frequency Search Request Message* to '1'.

3.6.6.2.2 Call Processing During Handoff

When a mobile station performs a handoff from a base station with a P_REV lower than the mobile station's MOB_P_REV to a base station with a P_REV greater than the P_REV of the previous base station, the base station should send the service configuration to the mobile station.

3.6.6.2.2.1 Processing the Pilot Strength Measurement Message

The base station should use the pilot strength measurements in the *Pilot Strength Measurement Message* or the *Extended Pilot Strength Measurement Message* to determine a new Active Set.

The base station may also use the PN phase measurements in the *Pilot Strength Measurement Message* or the *Extended Pilot Strength Measurement Message* to estimate the propagation delay to the mobile station. This estimate can be used to reduce Reverse Traffic Channel acquisition time.

If the base station receives a *Pilot Strength Measurement Message* or *Extended Pilot Strength Measurement Message* that includes any pilots for which supplementary information is needed for handoff, then the base station may send a *Handoff Supplementary Information Solicit Message* to the mobile station[6].

The base station may respond to a *Pilot Strength Measurement Message* or an *Extended Pilot Strength Measurement Message* received from the mobile station by sending the *Extended Handoff Direction Message*, the *General Handoff Direction Message*, or the *Universal Handoff Direction Message*.

3.6.6.2.2.2 Processing the Extended Handoff Direction Message

The base station shall maintain a handoff message sequence number. If the base station specifies that the mobile station is to use service negotiation, the base station shall set the SERV_NEG variable (see 3.6.4.1.2.1.4) to be enabled at the action time of the message. The sequence number shall be initialized to zero prior to the transmission of the first *Extended Handoff Direction Message*, *General Handoff Direction Message* (see 3.6.6.2.2.10), or the *Universal Handoff Direction Message* to the mobile station. The base station shall increment the sequence number modulo 4 each time the base station modifies the pilot list (including the order in which pilots are specified within the list) or the code channels (including a change in the ordering such that the first code channel occurrence for any pilot is changed) sent to the mobile station in an *Extended Handoff Direction Message*, a *General Handoff Direction Message*, or a *Universal Handoff Direction Message*.

Following a hard handoff, the base station should set the handoff message sequence number to the value of the LAST_HDM_SEQ field of the *Handoff Completion Message* or *Extended Handoff Completion Message* and should use the pilot order contained in the *Handoff Completion Message* or *Extended Handoff Completion Message* to interpret the contents of subsequent *Power Measurement Report Messages*.

The base station shall set the contents of an *Extended Handoff Direction Message* according to the following rules:

---

[6] After receiving a *PSMM*, *PSMMM* or *EPSMM Message*, base station waits for an implementation specific duration for the arrival of *Handoff Supplementary Information Notification Message* before transmitting the *Handoff Supplementary Information Solicit Message*.

- An *Extended Handoff Direction Message* shall list no more than N_{6m} pilots in the new Active Set.
- An *Extended Handoff Direction Message* shall identify the identical power control subchannels (i.e., those carrying identical power control bits).
- An *Extended Handoff Direction Message* may change the code channel associated with an Active Set pilot that remains in the new Active Set.
- The base station specifies the long code mask to be used on the new Forward Traffic Channel by using the PRIVATE_LCM field of the *Extended Handoff Direction Message*. The base station may change the long code mask to be used on the new Forward Traffic Channel via the PRIVATE_LCM field of the *Extended Handoff Direction Message* only for CDMA-to-CDMA hard handoffs. If a change of long code mask is specified and the base station does not specify an explicit action time in the *Extended Handoff Direction Message*, the base station shall begin using the new long code mask on the first 80 ms boundary (relative to System Time) occurring at least 80 ms after the end of the frame containing the last bit of the message.
- For CDMA-to-CDMA handoffs, the base station may require the mobile station to perform a reset of the acknowledgment procedures by using the RESET_L2 field of the *Extended Handoff Direction Message*. If the base station requires the mobile station to reset the acknowledgment procedures, Layer 3 shall send an indication to Layer 2 to reset the acknowledgment procedures (see [4]). The acknowledgment procedures shall be reset immediately after the action time of the *Extended Handoff Direction Message*.
- For CDMA-to-CDMA hard handoffs, the base station may alter the frame offset by setting the FRAME_OFFSET field to a new value. If the base station specifies a new frame offset and does not specify an explicit action time, the base station shall change its Forward and Reverse Traffic Channel frame offsets at the second 80 ms boundary (relative to System Time) after the end of transmission of the *Extended Handoff Direction Message*, unless the end of transmission of the message coincides with an 80 ms boundary, in which case the change in frame offsets shall occur 80 ms after the end of transmission.
- For CDMA-to-CDMA hard handoffs to Band Class 0 or Band Class 3, the base station may alter the nominal transmit power offset after handoff by setting the NOM_PWR field to the new nominal transmit power offset. For CDMA-to-CDMA hard handoffs to band classes other than Band Class 0 and Band Class 3, the base station may alter the nominal transmit power offset after handoff by setting both the NOM_PWR and NOM_PWR_EXT fields to the new nominal transmit power offset.

- The base station may specify a different band class by setting the BAND_CLASS and CDMA_FREQ fields to the band class and CDMA frequency assignment respectively. The base station shall not specify a band class not supported by the mobile station. If the reverse channel corresponding to forward channel included in this message is separated by flexible channel spacing, the base station shall extend this message using the General Extension Message and include a Reverse Channel Information Record that specifies the reverse frequency to be used by the mobile station after handoff.
- If the base station sends the *Extended Handoff Direction Message* in assured mode, the base station should set the action time of the message such that there is sufficient time for the mobile station to transmit a message containing the acknowledgment prior to the action time.
- For CDMA-to-CDMA hard handoffs, the base station may specify whether the mobile station is to use service negotiation or service option negotiation by setting the SERV_NEG_TYPE field of the *Extended Handoff Direction Message*. If the base station specifies that the mobile station is to use service negotiation, the base station shall set the SERV_NEG variable (see 3.6.4.1.2.1.4) to enabled at the action time of message. If the base station specifies that the mobile station is to use service option negotiation, the base station shall set SERV_NEG to disabled at the action time of the message.

3.6.6.2.2.3 Processing the Candidate Frequency Search Request Message

The base station may send a *Candidate Frequency Search Request Message* to direct the mobile station to perform a single or periodic search on the Candidate Frequency.

The base station may request the mobile station to perform an aligned search of the Candidate Frequency Search Set (see 2.6.6.2.8.3). If the base station requests the mobile station to perform an aligned search, the base station shall specify an explicit action time for the *Candidate Frequency Search Request Message*.

The base station shall maintain a search message sequence number. The sequence number shall be initialized to zero prior to the transmission of the first *Candidate Frequency Search Request Message* to the mobile station. Each time the base station sends a new *Candidate Frequency Search Request Message* to the mobile station, it shall set the CFSRM_SEQ field to the current value of the sequence number, and increment the sequence number modulo 4.

3.6.6.2.2.4 Processing the Candidate Frequency Search Response Message

The base station should use the mobile station's search capabilities as reported in the *Candidate Frequency Search Response Message* to determine an appropriate period for the mobile station's periodic search on the Candidate Frequency.

3.6.6.2.2.5 Processing the Candidate Frequency Search Control Message

The base station may send a *Candidate Frequency Search Control Message* to direct the mobile station to perform a single search, or to start or stop a periodic search on the Candidate Frequency.

The base station may request the mobile station to perform an aligned search of the Candidate Frequency Search Set (see 2.6.6.2.8.3). If the base station requests the mobile station to perform an aligned search, the base station shall specify an explicit action time for the *Candidate Frequency Search Control Message*.

Each time the base station sends a new *Candidate Frequency Search Control Message* to the mobile station, it shall set the CFSCM_SEQ field to the current value of the sequence number, and increment the sequence number modulo 4.

3.6.6.2.2.6 Processing the Candidate Frequency Search Report Message

The base station should use the value of the LAST_SRCH_MSG field and of the LAST_SRCH_MSG_SEQ field of the *Candidate Frequency Search Report Message* to interpret the contents of the message.

If the SEARCH_MODE field of the *Candidate Frequency Search Report Message* is equal to '0000', the base station should use the pilot strength measurements in the message to determine whether to direct the mobile station to perform a CDMA-to-CDMA inter-frequency handoff, and to determine the new Active Set.

3.6.6.2.2.7 Transmitting During Handoff

The base station shall continue transmission to the mobile station on the Fundamental Channel or the Dedicated Control Channel of a Forward Traffic Channel removed from the Active Set until it receives the *Handoff Completion Message* or *Extended Handoff Completion Message* from the mobile station or determines that the call has been released.

The base station should discontinue transmission to the mobile station on the Fundamental Channel or the Dedicated Control Channel of a Forward Traffic Channel removed from the Active Set after it receives the *Handoff Completion Message* or *Extended Handoff Completion Message*.

For Forward Multiplex Options 3 through 16, the base station should discontinue transmission of Forward Supplemental Code Channels removed from the Code Channel List according to the following rules:

- If a *General Handoff Direction Message* is used to remove one or more Forward Supplemental Code Channels, the base station should discontinue transmission on those code channels no later than the action time of the *General Handoff Direction Message*.
- If a *Supplemental Channel Assignment Message* is used to remove one or more Forward Supplemental Code Channels, the base station should discontinue transmission on those Forward Supplemental Code Channels no later than the implicit action time of the *Supplemental Channel Assignment Message*.

3.6.6.2.2.8 Ordering Pilot Measurements From the Mobile Station

The base station may direct the mobile station to send a *Pilot Strength Measurement Message* by sending a *Pilot Measurement Request Order*.

The base station may send a *Periodic Pilot Measurement Request Order* to direct the mobile station to send pilot strength measurements one time or periodically. In response to the order, the mobile station reports the pilot strength measurements using the *Periodic Pilot Strength Measurement Message*.

3.6.6.2.2.9 Processing the Supplemental Channel Assignment Message

The base station may use this message to specify Supplemental Code Channel assignment parameters for the mobile station's Forward Traffic Channel, Reverse Traffic Channel, or both. This information includes the parameters that control the timing of the Supplemental Code Channel assignment (e.g., starting time and duration), and parameters that control the number of Supplemental Code Channels which will be used during the assignment (e.g., the number of Reverse Supplemental Code Channels on which the mobile station may transmit and the set of Walsh codes on which the mobile station receives Forward Supplemental Code Channels for each pilot in the mobile station's Active Set). The *Supplemental Channel Assignment Message* shall be used only with Multiplex Options 3 through 16.

The base station shall set the content of a *Supplemental Channel Assignment Message* according to the following rules:

- The base station may set USE_RETRY_DELAY to '1' and RETRY_DELAY to a delay in 320 ms units starting at the next 80 ms system time boundary during which the mobile station is to refrain from sending subsequent *Supplemental Channel Request Messages*. The base station may set RETRY_DELAY to '11111111' to indicate that the mobile station is to refrain from transmitting *Supplemental Channel Request Messages* indefinitely. Otherwise, the base station shall set USE_RETRY_DELAY to '0' and omit RETRY_DELAY in which case the mobile station is to reset any previously set RETRY_DELAY indication.
- The base station shall set REV_DTX_DURATION to the maximum duration of time in units of 20 ms that the mobile station is allowed to stop transmission on a Reverse Supplemental Code Channel before resuming transmission on the Reverse Supplemental Code Channel within the reverse assignment duration. The base station shall set this field to '0000' if the mobile station is to stop using a Reverse Supplemental Code Channel once it has stopped transmitting on that Reverse Supplemental Code Channel. The base station shall set this field to '1111' if the mobile station is allowed to resume transmission on a Reverse Supplemental Code Channel at any time within the reverse assignment duration.
- A *Supplemental Channel Assignment Message* may specify Reverse Supplemental Code Channel assignments. If Reverse Supplemental Code Channel assignment information is included, the base station shall set REV_INCLUDED to '1' and include the appropriate Reverse Supplemental Code Channel assignment information. Otherwise, the base station shall set REV_INCLUDED to '0'.

- The base station shall indicate the implicit, explicit, or linked start time for a Reverse Supplemental Code Channel assignment as follows:
  - The base station may set EXPL_REV_START_TIME to ‘1’ and set REV_START_TIME to the System Time, in units of 80 ms (modulo 64), at which the mobile station is to start transmitting on the Reverse Supplemental Code Channels.
  - The base station may set USE_REV_HDM_SEQ to ‘1’ and set REV_LINKED_HDM_SEQ to the sequence number of the *General Handoff Direction Message* (HDM_SEQ) with which this message is linked to indicate that the mobile station is to start processing the Reverse Supplemental Code Channels at the action time of the linked *General Handoff Direction Message*.
  - The base station may set EXPL_REV_START_TIME to ‘0’ and USE_REV_HDM_SEQ to ‘0’ to indicate that the mobile station is to start processing Reverse Supplemental Code Channels at the implicit action time of this message.
  - The base station shall not set both EXPL_REV_START_TIME and USE_REV_HDM_SEQ to ‘1’.
- The base station may set USE_REV_DURATION to ‘1’ and REV_DURATION to the time interval, in units of 80 ms, after the implicit, explicit, or linked action time for the message (as specified in 2.6.6.2.5.1), during which the mobile station is to transmit on the specified Reverse Supplemental Code Channels. The base station may set USE_REV_DURATION to ‘0’ to indicate an infinite duration for the assignment of Reverse Supplemental Code Channels. If NUM_REV_CODES is ‘000’, then the base station shall set USE_REV_DURATION to ‘0’.
- If Reverse Supplemental Code Channel assignment information is included, the base station shall set NUM_REV_CODES to the number of Reverse Supplemental Code Channels to be used in this Reverse Supplemental Code Channel assignment. The base station shall not set NUM_REV_CODES to be greater than the number of codes supported by the currently negotiated multiplex option.
- The base station may set USE_T_ADD_ABORT, the Reverse Supplemental Code Channel assignment T_ADD abort indicator, to ‘1’ to indicate that the mobile station is to abort Reverse Supplemental Code Channel assignments implicitly when a T_ADD trigger occurs. Otherwise, the base station shall set USE_T_ADD_ABORT to ‘0’. If NUM_REV_CODES is set to ‘000’, the base station shall set USE_T_ADD_ABORT to ‘0’.
- If the base station is sending this message in response to a *Supplemental Channel Request Message* which includes a *Supplemental Channel Request Message* sequence number and the mobile station is to clear the IGNORE_SCAM field, the base station shall set USE_SCRM_SEQ_NUM to ‘1’ and set SCRM_SEQ_NUM to the sequence number corresponding to the SCRM_SEQ_NUM field in a *Supplemental Channel Request Message* to which the mobile station is to match this message. Otherwise, the base station shall set USE_SCRM_SEQ_NUM to ‘0’ and omit SCRM_SEQ_NUM.

- A *Supplemental Channel Assignment Message* may specify Forward Supplemental Code Channel assignments. If Forward Supplemental Code Channel assignment information is included, the base station shall set FOR_INCLUDED to '1' and include the appropriate Forward Supplemental Code Channel assignment information. Otherwise, the base station shall set FOR_INCLUDED to '0'.
- The base station shall set FOR_SUP_CONFIG to '00' if the mobile station is to stop processing the forward supplemental code after the action time of the *Supplemental Channel Assignment Message*. The base station should not transmit to the mobile station on the Forward Supplemental Code Channels after the message takes effect.
- The base station shall set FOR_SUP_CONFIG to '01' if the mobile station is to start processing the Forward Supplemental Code Channels in the Code Channel List at the implicit, explicit, or linked action time for the message as specified in 2.6.6.2.5.1.
- The base station shall set FOR_SUP_CONFIG to '10' if the Forward Supplemental Code Channels associated with the pilots in the Active set are specified in the *Supplemental Channel Assignment Message* and is to stop processing Forward Supplemental Code Channels at the implicit action time of the message. The base station should not transmit to the mobile station on the Forward Supplemental Code Channels after the message takes effect.
- The base station shall set FOR_SUP_CONFIG to '11' if the Forward Supplemental Code Channels associated with the pilots in the Active set are specified in the *Supplemental Channel Assignment Message* and the mobile station is to start processing the Forward Supplemental Code Channels at the implicit, explicit, or linked action time for the message as specified in 2.6.6.2.5.1.
- The base station shall set FOR_DURATION to the time interval, in units of 80 ms, after the implicit, explicit, or linked action time for the message (as specified in 2.6.6.2.5.1), during which the mobile station is to process the specified Forward Supplemental Code Channels. The base station may set USE_FOR_DURATION to '0' to indicate an infinite duration for the allocation of Forward Supplemental Code Channels. The base station should not transmit to the mobile station on the Forward Supplemental Code Channels outside the time interval specified by FOR_DURATION.
- The base station may set EXPL_FOR_START_TIME to '1' and set FOR_START_TIME to the System Time, in units of 80 ms (modulo 64), at which the mobile station is to start processing the Forward Supplemental Code Channels.
- The base station may set USE_FOR_HDM_SEQ to '1' and set FOR_LINKED_HDM_SEQ to the sequence number of the *General Handoff Direction Message* (HDM_SEQ) with which this message is linked to indicate that the mobile station is to start processing the Forward Supplemental Code Channels at the action time of the linked *General Handoff Direction Message*.
- The base station shall not set both USE_FOR_HDM_SEQ and EXPL_FOR_START_TIME within a *Supplemental Channel Assignment Message* to '1'.

- The number of Supplemental Code Channels assigned by *Supplemental Channel Assignment Message* shall not exceed the maximum number of Supplemental Code Channels for the negotiated Forward Multiplex Option.
- The base station may set EXPL_FOR_START_TIME to '0' and USE_FOR_HDM_SEQ to '0' to indicate that the mobile station is to start processing Forward Supplemental Code Channels at the implicit action time of this message.

3.6.6.2.2.10 Processing the General Handoff Direction Message

The base station shall maintain a handoff message sequence number. The sequence number shall be initialized to zero prior to the transmission of the first *Extended Handoff Direction Message*, *General Handoff Direction Message*, or *Universal Handoff Direction Message* (see 3.6.6.2.2.11) to the mobile station (see 2.6.6.2.2.2). The base station shall increment the sequence number modulo 4 each time the base station modifies the pilot list (including the order in which pilots are specified within the list) or the code channels (including a change in the ordering such that the first code channel occurrence for any pilot is changed) sent to the mobile station in an *Extended Handoff Direction Message*, *General Handoff Direction Message*, or *Universal Handoff Direction Message*.

Following a hard handoff, the base station should set the handoff message sequence number to the value of the LAST_HDM_SEQ field of the *Handoff Completion Message* or *Extended Handoff Completion Message* and should use the pilot order contained in the *Handoff Completion Message* or *Extended Handoff Completion Message* to interpret the contents of subsequent *Power Measurement Report Messages*.

The base station shall set the contents of a *General Handoff Direction Message* according to the following rules:

- A *General Handoff Direction Message* shall list no more than N_{6m} pilots in the new Active Set.
- The base station may include a Service Configuration Information Record in the *General Handoff Direction Message* to accept a service configuration proposed in a *Service Request Message* or *Service Response Message*, and instruct the mobile station to begin using the service configuration.
- A *General Handoff Direction Message* shall identify the identical power control subchannels (i.e., those carrying identical power control bits).
- A *General Handoff Direction Message* shall identify the transmit power level of the power control subchannels to the transmit power level of 20 ms frames at a 9600 bps or 14400 bps rate on their respective associated channels (Forward Fundamental Channel or Forward Dedicated Control Channel).

- For CDMA-to-CDMA handoffs, the base station may specify Power Control Subchannel Gain action time (PC_ACTION_TIME]. If PC_ACTION_TIME is included in this message, the base station shall apply the new FPC_SUBCHAN_GAIN at the time specified by PC_ACTION_TIME. If the PC_ACTION_TIME is not included in this message but the explicit action time is included, the base station shall apply the new FPC_SUBCHAN_GAIN at the action time of the *General Handoff Direction Message*. If the implicit action time is used, the base station should gradually apply any change in FPC_SUBCHAN_GAIN.
- A *General Handoff Direction Message* may change the code channel associated with an Active Set pilot that remains in the new Active Set.
- The base station specifies the long code mask to be used on the new Forward Traffic Channel by using the PRIVATE_LCM field of the *General Handoff Direction Message*. The base station may change the long code mask to be used on the new Forward Traffic Channel via the PRIVATE_LCM field of the *General Handoff Direction Message* only for CDMA-to-CDMA hard handoffs. If a change of long code mask is specified and the base station does not specify an explicit action time in the *General Handoff Direction Message*, the base station shall begin using the new long code mask on the first 80 ms boundary (relative to System Time) occurring at least 80 ms after the end of the frame containing the last bit of the message.
- For CDMA-to-CDMA handoffs, the base station may require the mobile station to perform a reset of the acknowledgment procedures by using the RESET_L2 field of the *General Handoff Direction Message*. If the base station requires the mobile station to reset the acknowledgment procedures, Layer 3 shall send an indication to Layer 2 to reset the acknowledgment procedures (see [4]). The acknowledgment procedures of the base station that the mobile station is to handoff to shall be reset immediately after the action time of the *General Handoff Direction Message*.
- For CDMA-to-CDMA hard handoffs, the base station may alter the frame offset by setting the FRAME_OFFSET field to a new value. If the base station specifies a new frame offset and does not specify an explicit action time, the base station shall change its Forward and Reverse Traffic Channel frame offsets at the second 80 ms boundary (relative to System Time) after the end of transmission of the *General Handoff Direction Message*, unless the end of transmission of the message coincides with an 80 ms boundary, in which case the change in frame offsets shall occur 80 ms after the end of transmission.
- For CDMA-to-CDMA hard handoffs to Band Class 0 or Band Class 3, the base station may alter the nominal transmit power offset after handoff by setting the NOM_PWR field to the new nominal transmit power offset. For CDMA-to-CDMA hard handoffs to band classes other than Band Class 0 and Band Class 3, the base station may alter the nominal transmit power offset after handoff by setting both the NOM_PWR and NOM_PWR_EXT fields to the new nominal transmit power offset.

- The base station may specify a different band class by setting the BAND_CLASS and CDMA_FREQ fields to the band class and CDMA frequency assignment respectively. The base station shall not specify a band class not supported by the mobile station. If the reverse channel corresponding to forward channel included in this message is separated by flexible channel spacing, the base station shall extend this message using the General Extension Message and include a Reverse Channel Information Record that specifies the reverse frequency to be used by the mobile station after handoff.
- If the base station sends the *General Handoff Direction Message* in assured mode, the base station should set the action time of the message such that there is sufficient time for the mobile station to transmit a message containing the acknowledgment prior to the action time.
- For CDMA-to-CDMA hard handoffs, the base station may specify whether the mobile station is to use service negotiation or service option negotiation by setting the SERV_NEG_TYPE field of the *General Handoff Direction Message*. If the base station specifies that the mobile station is to use service negotiation, the base station shall set the SERV_NEG variable (see 3.6.4.1.2.1.4) to enabled at the action time of message. If the base station specifies that the mobile station is to use service option negotiation, the base station shall set SERV_NEG to disabled at the action time of the message.
- The base station may specify whether the mobile station is to restore its configuration to what it was before the handoff attempt, if it fails in the handoff attempt using criteria specified in the *Candidate Frequency Search Request Message*, by using the RETURN_IF_HANDOFF_FAIL field of the *General Handoff Direction Message*. The base station may specify whether the mobile station is to periodically search a CDMA Candidate Frequency for useable pilots, using criteria specified in the *Candidate Frequency Search Request Message*, by using the PERIODIC_SEARCH field of the *General Handoff Direction Message*.
- The base station may include Forward Supplemental Code Channel assignment information in the *General Handoff Direction Message* if the Forward Multiplex Option for the currently connected service option is 3, 4, 5, 6, 7, 8, 9, 10, 11, 12, 13, 14, 15, or 16. If Forward Supplemental Code Channel assignment information is included, the base station shall include FOR_INCLUDED, set FOR_INCLUDED to ‘1’, and include the appropriate Forward Supplemental Code Channel assignment information.
- The number of Forward Supplemental Code Channels assigned by the *General Handoff Direction Message* shall not exceed the maximum number of Forward Supplemental Code Channels for the negotiated Forward Multiplex Option.
- The base station shall set FOR_SUP_CONFIG to ‘00’ if the mobile station is to stop processing the Forward Supplemental Code Channel after the action time of *General Handoff Direction Message*. The base station should not transmit to the mobile station on the Forward Supplemental Code Channels after the message takes effect.

- The base station shall set FOR_SUP_CONFIG to '01' if the mobile station is to start processing the Forward Supplemental Code Channels in the Code Channel List at the action time of the message.
- The base station shall set FOR_SUP_CONFIG to '10' if the Forward Supplemental Code Channels associated with the pilots in the Active set are specified in the *General Handoff Direction Message* and the mobile station is to stop processing Forward Supplemental Code Channels at the implicit action time of the message. The base station should not transmit to the mobile station on the Forward Supplemental Code Channels after the message takes effect.
- The base station shall set FOR_SUP_CONFIG to '11' if the Forward Supplemental Code Channels associated with the pilots in the Active set are specified in the *General Handoff Direction Message* and the mobile station is to start processing the Forward Supplemental Code Channels at the action time of the message.
- The base station shall set FOR_DURATION to the time interval after the action time of the message, in units of 80 ms, during which the mobile station is to process the specified Forward Supplemental Code Channels. The base station may set USE_FOR_DURATION to '0' to indicate an infinite duration for the allocation of Forward Supplemental Code Channels. The base station should not transmit to the mobile station on the Forward Supplemental Code Channels outside the time interval specified by FOR_DURATION.
- If FOR_INCLUDED is included in the message, the base station shall include EXPL_CODE_CHAN for each pilot included in the message. If EXPL_CODE_CHAN is included and set to '1' for a pilot, the code channels associated with the pilot in the *General Handoff Direction Message* shall be ordered such that the first code channel occurrence is associated with the Forward Fundamental Channel and the successive occurrences are associated with Forward Supplemental Code Channels. If EXPL_CODE_CHAN is included and is set to '0', for each pilot in the new Active Set, the base station shall include BASE_CODE_CHAN and set it to the base code channel index in the range of 1 to (63 - NUM_FOR_SUP + 1), inclusive, that the mobile station is to use as the first Forward Supplemental Code Channel associated with this pilot. The mobile station is to use NUM_FOR_SUP adjacent code channels beginning with index BASE_CODE_CHAN (i.e., BASE_CODE_CHAN through BASE_CODE_CHAN + NUM_FOR_SUP - 1) for the Forward Supplemental Code Channels associated with this pilot.
- The base station may include Reverse Supplemental Code Channel assignment information in the *General Handoff Direction Message* if the Reverse Multiplex Option is 3, 4, 5, 6, 7, 8, 9, 10, 11, 12, 13, 14, 15, or 16. If Reverse Supplemental Code Channel assignment information is included, the base station shall include REV_INCLUDED, set REV_INCLUDED to '1', and include the appropriate Reverse Supplemental Code Channel assignment information in the additional fields.

- If Reverse Supplemental Code Channel assignment information is included, the base station shall set NUM_REV_CODES to the number of Reverse Supplemental Code Channels to be used by the mobile station. The base station shall not set NUM_REV_CODES to be greater than the number of codes supported by the currently negotiated multiplex option.
- The base station may set USE_T_ADD_ABORT, the Reverse Supplemental Code Channel assignment T_ADD abort indicator, to '1' to indicate that the mobile station is to abort Reverse Supplemental Code Channel assignments implicitly when a T_ADD trigger occurs. Otherwise, the base station shall set USE_T_ADD_ABORT to '0'. If NUM_REV_CODES is set to '000', the base station shall set USE_T_ADD_ABORT to '0'.
- The base station shall set REV_DTX_DURATION to the maximum duration of time in units of 20 ms that the mobile station is allowed to stop transmission on a Reverse Supplemental Code Channel before resuming transmission on the Reverse Supplemental Code Channel. The base station shall set this field to '0000' if the mobile station is to stop using a Reverse Supplemental Code Channel once it has stopped transmitting on that Reverse Supplemental Code Channel. The base station shall set this field to '1111' if the mobile station is allowed to resume transmission on a Reverse Supplemental Code Channel at any time within the reverse assignment duration.
- The base station may set CLEAR_RETRY_DELAY to '1' to indicate that the mobile station is to cancel any previously stored retry delay. Otherwise, the base station shall set CLEAR_RETRY_DELAY to '0' to indicate that the mobile station is to continue to honor any previously stored retry delay (see 2.6.6.2.5.1).
- The base station may indicate a duration for the Reverse Supplemental Code Channel assignment (in 80 ms superframes) by setting USE_REV_DURATION to '1' and indicating the desired duration in the REV_DURATION field. If USE_REV_DURATION is set to '0', a duration of infinity is indicated, and the base station shall set the REV_DURATION to '00000000'. If NUM_REV_CODES is '000', then the base station shall set USE_REV_DURATION to '0' and shall set REV_DURATION to '00000000'.
- The base station may set USE_REV_DURATION to '1' and REV_DURATION to the time interval after the action time of the message, in units of 80 ms, during which the mobile station may transmit on the assigned Reverse Supplemental Code Channels. The base station may set USE_REV_DURATION to '0' to indicate an infinite duration for the allocation of Forward Supplemental Code Channels.
- The base station may specify a closed loop power control step size by setting USE_PWR_CNTL_STEP to '1' and indicating the desired power control step size in the PWR_CNTL_STEP field (see 2.1.2.3.2). Otherwise, the base station shall set USE_PWR_CNTL_STEP to '0'. The base station shall not specify a power control step size not supported by the mobile station.

3.6.6.2.2.11 Processing the Universal Handoff Direction Message

The base station shall maintain a handoff message sequence number. The sequence number shall be initialized to zero prior to the transmission of the first *Extended Handoff Direction Message* (see 3.6.6.2.2.2), *General Handoff Direction Message* (see 3.6.6.2.2.10), or *Universal Handoff Direction Message* to the mobile station. The base station shall increment the sequence number modulo 4 each time the base station modifies the pilot list (including the order in which pilots are specified within the list) or the code channels (including a change in the ordering such that the first code channel occurrence for any pilot is changed) sent to the mobile station in an *Extended Handoff Direction Message*, a *General Handoff Direction Message*, or an *Universal Direction Message*.

Following a hard handoff, the base station should set the handoff message sequence number to the value of the LAST_HDM_SEQ field of the *Handoff Completion Message* or *Extended Handoff Completion Message* and should use the pilot order contained in the *Handoff Completion Message* or *Extended Handoff Completion Message* to interpret the contents of subsequent *Power Measurement Report Messages*.

The base station shall set the contents of a *Universal Handoff Direction Message* according to the following rules:

- A *Universal Handoff Direction Message* shall list no more than N_{6m} pilots in the new Active Set.
- The base station may include a Service Configuration Information Record in the *Universal Handoff Direction Message* to accept a service configuration proposed in a *Service Request Message* or *Service Response Message*, and instruct the mobile station to begin using the service configuration.
- A *Universal Handoff Direction Message* shall identify the identical power control subchannels (i.e., those carrying identical power control bits).
- A *Universal Handoff Direction Message* shall identify the transmit power level of the power control subchannels to the transmit power level of 20 ms frames at a 9600 bps or 14400 bps rate on their respective associated channels (Forward Fundamental Channel or Forward Dedicated Control Channel).
- For CDMA-to-CDMA handoffs, the base station may specify Power Control Subchannel Gain action time (PC_ACTION_TIME]. If PC_ACTION_TIME is included in this message, the base station shall apply the new FPC_SUBCHAN_GAIN at the time specified by PC_ACTION_TIME. If the PC_ACTION_TIME is not included in this message but the explicit action time is included, the base station shall apply the new FPC_SUBCHAN_GAIN at the action time of the *Universal Handoff Direction Message*. If the implicit action time is used, the base station should gradually apply any change in FPC_SUBCHAN_GAIN.
- A *Universal Handoff Direction Message* may change the code channel associated with an Active Set pilot that remains in the new Active Set.
- A *Universal Handoff Direction Message* may delete the code channel associated with an Active Set pilot that remains in the new Active Set.

- A *Universal Handoff Direction Message* may add the code channel associated with an Active Set pilot that remains in the new Active Set.
- The base station specifies the long code mask to be used on the new Forward Traffic Channel by using the PRIVATE_LCM and PLCM_TYPE fields of the *Universal Handoff Direction Message*. The base station may change the contents of the PRIVATE_LCM field only for CDMA-to-CDMA hard handoffs. If a change of long code mask is specified and the base station does not specify an explicit action time in the *Universal Handoff Direction Message*, the base station shall begin using the new long code mask on the first 80 ms boundary (relative to System Time) occurring at least 80 ms after the end of the frame containing the last bit of the message.
- For CDMA-to-CDMA handoffs, the base station may require the mobile station to perform a reset of the acknowledgment procedures by using the RESET_L2 field of the *Universal Handoff Direction Message*. If the base station requires the mobile station to reset the acknowledgment procedures, Layer 3 shall send an indication to Layer 2 to reset the acknowledgment procedures (see [4]). The acknowledgment procedures of the base station that the mobile station is to handoff to shall be reset immediately after the action time of the *General Handoff Direction Message*.
- For CDMA-to-CDMA hard handoffs, the base station may alter the frame offset by setting the FRAME_OFFSET field to a new value. If the base station specifies a new frame offset and does not specify an explicit action time, the base station shall change its Forward and Reverse Traffic Channel frame offsets at the second 80 ms boundary (relative to System Time) after the end of transmission of the *Universal Handoff Direction Message*, unless the end of transmission of the message coincides with an 80 ms boundary, in which case the change in frame offsets shall occur 80 ms after the end of transmission.
- For CDMA-to-CDMA hard handoffs to Band Class 0 or Band Class 3, the base station may alter the nominal transmit power offset after handoff by setting the NOM_PWR field to the new nominal transmit power offset. For CDMA-to-CDMA hard handoffs to band classes other than Band Class 0 and Band Class 3, the base station may alter the nominal transmit power offset after handoff by setting both the NOM_PWR and NOM_PWR_EXT fields to the new nominal transmit power offset.
- The base station may specify a different band class by setting the BAND_CLASS and CDMA_FREQ fields to the band class and CDMA frequency assignment respectively. The base station shall not specify a band class not supported by the mobile station. If the reverse channel corresponding to forward channel included in this message is separated by flexible channel spacing, the base station shall extend this message using the General Extension Message and include a Reverse Channel Information Record that specifies the reverse frequency to be used by the mobile station after handoff[7].

---

[7] Similarly, *MEID Universal Handoff Direction Message* may be extended through General Extension

(footnote continued on next page)

- If the base station sends the *Universal Handoff Direction Message* in assured mode, the base station should set the action time of the message such that there is sufficient time for the mobile station to transmit a message containing the acknowledgment prior to the action time.
- For CDMA-to-CDMA handoffs, the base station may specify whether the mobile station is to use service negotiation or service option negotiation by setting the SERV_NEG_TYPE field of the *Universal Handoff Direction Message*. If the base station specifies that the mobile station is to use service negotiation, the base station shall set the SERV_NEG variable (see 3.6.4.1.2.1.4) to enabled at the action time of message. If the base station specifies that the mobile station is to use service option negotiation, the base station shall set SERV_NEG to disabled at the action time of the message.
- The base station may specify whether the mobile station is to restore its configuration to what it was before the handoff attempt, if it fails in the handoff attempt using criteria specified in the *Candidate Frequency Search Request Message*, by using the RETURN_IF_HANDOFF_FAIL field of the *Universal Handoff Direction Message*. The base station may specify whether the mobile station is to periodically search a CDMA Candidate Frequency for useable pilots, using criteria specified in the *Candidate Frequency Search Request Message*, by using the PERIODIC_SEARCH field of the *Universal Handoff Direction Message*.
- The base station specifies Active Set for the Fundamental Channel only, the Dedicated Control Channel only, or both. The Active Set of the Dedicated Control Channel shall be the same as the Active Set of the Fundamental Channel when both the Fundamental Channel and Dedicated Control Channel are assigned.
- The base station may specify the Active Set of the Supplemental Channels. The Active Set of the Supplemental Channels shall be a subset of the Active Set of the Fundamental Channel or the Dedicated Control Channel.
- If a Reverse Packet Data Channel assignment is not included, a *Universal Handoff Direction Message* may specify a Reverse Supplemental Channel assignment. If Reverse Supplemental Channel assignment information is included, this message contains information that specifies the start time, duration, and the data transfer rate associated with this Reverse Supplemental Channel assignment.
- If a Reverse Packet Data Channel assignment is included, a *Universal Handoff Direction Message* shall not specify a Reverse Supplemental Channel assignment.
- A *Universal Handoff Direction Message* may specify a Forward Supplemental Channel assignment. If Forward Supplemental Channel assignment information is included, this message contains the start time, duration, and SCCL_INDEX associated with this Forward Supplemental Channel assignment.

Message.

- A *Universal Handoff Direction Message* may update the mapping between a particular SCCL_INDEX and a set of fields that specifies the data transfer rate, QOF index, Forward Supplemental Channel Walsh code for each PILOT_PN, and the active set for the Forward Supplemental Channel associated with FOR_SCH_ID.
- A *Universal Handoff Direction Message* may update REV_WALSH_ID field which specifies the Reverse Supplemental Walsh cover.
- The base station may set CLEAR_RETRY_DELAY to '1' to indicate that the mobile station is to cancel any previously stored retry delay. Otherwise, the base station shall set CLEAR_RETRY_DELAY to '0' to indicate that the mobile station is to continue to honor any previously stored retry delay (see 2.6.6.2.5.1).

3.6.6.2.2.12 Processing of Extended Supplemental Channel Assignment Message

If the Reverse Packet Data Channel is not assigned, the base station may use this message to carry Forward Supplemental Channel assignment information or Reverse Supplemental Channel assignment information.

If the Reverse Packet Data Channel is assigned, the base station may use this message to carry Forward Supplemental Channel assignment information, and the base station shall not use this message to carry Reverse Supplemental Channel assignment information.

If Forward Supplemental Channel assignment information is included, this message contains the start time, duration, and SCCL_INDEX associated with this Forward Supplemental Channel assignment. If Reverse Supplemental Channel assignment information is included, this message contains information that specifies the start time, duration, and the number of information bits per frame (or set of number of bits per frame if $RSCH\_VAR\_TABLE\_ID_s[REV\_SCH\_ID_r]$ is not equal to '000') associated with this Reverse Supplemental Channel assignment.

This message may specify the mapping between a particular SCCL_INDEX and a set of fields that specifies the number of information bits per frame (or set of number of bits per frame if $FSCH\_VAR\_TABLE\_ID_s[FOR\_SCH\_ID_r]$ is not equal to '000'), QOF index, Forward Supplemental Channel Walsh code for each PILOT_PN, and the active set for the Forward Supplemental Channel associated with FOR_SCH_ID.

This message may also include REV_WALSH_ID field which specifies the Reverse Supplemental Walsh cover.

The base station shall set the contents of an *Extended Supplemental Channel Assignment Message* according to the following rules:

- An *Extended Supplemental Channel Assignment Message* may specify a Reverse Supplemental Channel assignment. The base station shall set NUM_REV_SCH to the number of Reverse Supplemental Channels to be assigned. If the Reverse Packet Data Channel is assigned, the base station shall set NUM_REV_SCH to 0.
- An *Extended Supplemental Channel Assignment Message* may specify a Forward Supplemental Channel assignment. The base station shall set NUM_FOR_SCH to the number of Forward Supplemental Channels to be assigned.

- The base station shall set the START_TIME_UNIT field to indicate the unit of the FOR_SCH_START_TIME included in this message, the *Forward Supplemental Channel Assignment Mini Messages* and the *Universal Handoff Direction Message* and REV_SCH_START_TIME included in this message, the *Reverse Supplemental Channel Assignment Mini Messages* and the *Universal Handoff Direction Message*. The base station shall set this field to one less than the number of 20 ms intervals that is to be used by the mobile station for calculating the start time included in Forward Supplemental Channel assignments or Reverse Supplemental Channel assignments.
- An *Extended Supplemental Channel Assignment Message* may specify Forward Supplemental Channel configuration information. The base station shall set NUM_FOR_SCH_CFG to the number of Forward Supplemental Channel to be configured.
- The base station shall set the NUM_REC field to the number of instances of the following record minus one included in this message. The base station shall set the fields within each record as follows:
  - The base station shall set the SCCL_INDEX field to the index of the Supplemental Channel Code Information Record in the Supplemental Channel Code List Table.
  - The base station shall set the FOR_SCH_NUM_BITS_IDX field to the Forward Supplemental Channel number of information bits index associated with SCCL_INDEX.
  - The base station shall set the NUM_SUP_SHO field to the number of Forward Supplemental Channels minus one, corresponding to the FOR_SCH_ID and the SCCL_INDEX, for which the frames are to be soft-combined by the mobile station. The base station shall set the fields within each record as follows:
    - The base station shall set the PILOT_PN field to the pilot PN sequence offset for this pilot in units of 64 PN chips.
    - The base station shall set the QOF_MASK_ID_SCH field to the ID of the Quasi Orthogonal Function mask ID corresponding to the Forward Supplemental Channel Code index.
    - The base station shall set the CODE_CHAN_SCH field to the code channel on the Supplemental Channel corresponding to the PILOT_PN.
- REV_SCH_DTX_DURATION: The base station shall set REV_SCH_DTX_DURATION to the maximum duration of time in units of 20 ms that the mobile station is allowed to stop transmission on a Reverse Supplemental Channel before resuming transmission on the Reverse Supplemental Channel within the reverse assignment duration. The base station shall set this field to ‘0000’ if the mobile station is to stop using a Reverse Supplemental Channel once it has stopped transmitting on that Reverse Supplemental Channel. The base station shall set this field to ‘1111’ if the mobile station is allowed to resume transmission on a Reverse Supplemental Channel at any time within the reverse assignment duration.

- The base station may set USE_T_ADD_ABORT, the Reverse Supplemental Channel assignment T_ADD abort indicator, to '1' to indicate that the mobile station is to abort Reverse Supplemental Channel assignments when a T_ADD trigger occurs. Otherwise, the base station shall set USE_T_ADD_ABORT to '0'.
- If the base station is sending this message in response to a *Supplemental Channel Request Message* which includes a *Supplemental Channel Request Message* sequence number and the mobile station is to clear the IGNORE_ESCAM field, the base station shall set USE_SCRM_SEQ_NUM to '1' and set SCRM_SEQ_NUM to the sequence number corresponding to the SCRM_SEQ_NUM field in a *Supplemental Channel Request Message* to which the mobile station is to match this message. Otherwise, the base station shall set USE_SCRM_SEQ_NUM to '0' and omit SCRM_SEQ_NUM.
- If Forward Supplemental Channel burst assignment is included, the base station may include additional Forward Supplemental Channel configuration information including radio configuration, multiplex option, coding type, frame length, and maximum supplemental channel rate; if so, the base station shall set FOR_SCH_CC_INCL to '1'.
- If Reverse Supplemental Channel burst assignment is included, the base station may include additional Reverse Supplemental Channel configuration information including radio configuration, multiplex option, coding type, frame length, and maximum supplemental channel rate; if so, the base station shall set REV_SCH_CC_INCL to '1'.

3.6.6.2.2.13 Processing of Forward Supplemental Channel Assignment Mini Message

The base station may use this message to specify Forward Supplemental Channel assignment parameters for the mobile station's Forward Supplemental Channel. This information includes the FOR_SCH_ID, duration, start time, and the index to the previously specified Forward Supplemental Channel Code List, which determines number of information bits per frame (or set of number of bits per frame if $FSCH\_VAR\_TABLE\_ID_s[FOR\_SCH\_ID_r]$ is not equal to '000'), code channel index, and the identifier of the Quasi Orthogonal Function corresponding to the assignment.

The base station shall set the content of a *Forward Supplemental Channel Assignment Mini Message* according to the following rules:

- The base station shall set the FOR_SCH_ID to Forward Supplemental Channel identifier of the burst assignment that this message carries.

- The base station shall set the FOR_SCH_DURATION field to '0000' to indicate that the mobile station should stop processing the Forward Supplemental Channel starting at the explicit start time of the message specified by FOR_SCH_START_TIME. The base station shall set the FOR_SCH_DURATION field to ‘1111’ to indicate that the mobile station should process the Forward Supplemental Channel, starting at the explicit start time of the message specified by FOR_SCH_START_TIME, until a subsequent *Forward Supplemental Channel Assignment Mini Message* or an *Extended Supplemental Channel Assignment Message* with the same FOR_SCH_ID field is received. The base station shall set the FOR_SCH_DURATION field to the duration in units of 20 ms (see Table 3.7.3.3.2.37-3), starting at the explicit start time of the message specified by FOR_SCH_START_TIME, during which the mobile station is to process the Forward Supplemental Channel.
- The base station shall set the FOR_SCH_START_TIME field to the System Time, in units of time specified by START_TIME_UNIT, (modulo 32) at which the mobile station is to start processing the Forward Supplemental Channel specified in this message. The explicit start time for processing Forward Supplemental Channels is the time for which:

$$(\lfloor t/(\text{START\_TIME\_UNIT}+1)\rfloor - \text{FOR\_SCH\_START\_TIME}) \bmod 32 = 0,$$

  where t is the System Time in units of 20 ms.
- The base station shall set the SCCL_INDEX field to the index of the record in the Forward Supplemental Channel Code list corresponding to the FOR_SCH_ID.
- If the PILOT_GATING_USE_RATE to equal to ‘1’, the base station shall set PILOT_GATING_USE_RATE to ‘0’ and start transmitting the Forward Power Control Subchannel with the maximum rate at the action time of the message.

3.6.6.2.2.14 Processing of Reverse Supplemental Channel Assignment Mini Message

If the Reverse Packet Data Channel is assigned, the base station shall not send this message.

If the Reverse Packet Data Channel is not assigned, the base station may use this message to specify Reverse Supplemental Channel assignment parameters for the mobile station Reverse Supplemental Channel. This information includes the reverse supplemental channel identifier (REV_SCH_ID), the duration of transmission on the Reverse Supplemental Channel, the start time for the burst assignment, and the number of information bits per frame that the mobile station may transmit.

The base station shall set the content of the *Reverse Supplemental Channel Assignment Mini Message* according to the following rules:

- The base station shall set the REV_SCH_DURATION field to ‘0000’ to indicate that the mobile station should stop transmitting on the Reverse Supplemental Channel specified by REV_SCH_ID at the start time specified by REV_SCH_START_TIME. The base station shall set this field to ‘1111’ to indicate that the mobile station may transmit on the Reverse Supplemental Channel specified by REV_SCH_ID, starting at the start time specified by REV_SCH_START_TIME. The base station shall set the REV_SCH_DURATION field to the allocated duration (see Table 3.7.3.3.2.37-3), starting at the start time specified by REV_SCH_START_TIME, during which the mobile station may transmit on the Reverse Supplemental Channel specified by REV_SCH_ID.
- The base station shall set the REV_SCH_START_TIME field to the System Time, in units of time specified by START_TIME_UNIT, (modulo 32) at which the mobile station may start transmitting on the Reverse Supplemental Channel specified in this message. The explicit start time for transmitting on the Reverse Supplemental Channel is the time for which:

$$(\lfloor t/(\text{START\_TIME\_UNIT}+1)\rfloor - \text{REV\_SCH\_START\_TIME}) \bmod 32 = 0,$$

  where t is the System Time in units of 20 ms.
- The base station shall set the REV_SCH_BITS_IDX (see Table 3.7.3.3.2.37-2) to indicate the Reverse Supplemental Channel number of information bits per frame index.
- If the PILOT_GATING_USE_RATE to equal to ‘1’, the base station shall set PILOT_GATING_USE_RATE to ‘0’ and start transmitting the Forward Power Control Subchannel with the maximum rate at the action time of the message.

3.6.6.2.2.15 Processing of the Mobile Assisted Burst Operation Parameters Message

The base station may use this message to specify the operating parameters in the mobile station for Mobile Assisted Burst Operation procedures.

- A *Mobile Assisted Burst Operation Parameters Message* may specify pilot strength order change reporting information. If order change reporting information is included, the base station shall set ORDER_FLAG to ‘1’ and include the appropriate order change reporting fields. Otherwise, the base station shall set ORDER_FLAG to ‘0’. If ORDER_FLAG is set to ‘1’, the base station shall perform the following procedures:
  - The base station shall set PS_MIN_DELTA to one less than the minimum pilot strength measurement difference between any two pilots in the Active Set (in units of 0.5 dB) that must be measured in order for the mobile station to send a *Pilot Strength Measurement Mini Message*.

- The base station shall set ORDER_INTERVAL to the minimum interval (in 20 ms units) during which the indicated pilot strength measurement difference (greater than or equal to PS_MIN_DELTA + 1, in units of 0.5 dB) must be measured by the mobile station in order for the mobile station to send a *Pilot Strength Measurement Mini Message*.

- A *Mobile Assisted Burst Operation Parameters Message* may specify periodic pilot strength reporting. If periodic reporting information is included, the base station shall set PERIODIC_FLAG to '1' and include the appropriate periodic reporting fields. Otherwise, the base station shall set PERIODIC_FLAG to '0'. If PERIODIC_FLAG is set to '1', the base station shall perform the following procedures:
  - The base station shall set NUM_PILOTS to the number of pilots for which the mobile station is to send *Pilot Strength Measurement Mini Messages*.
  - The base station shall set PERIODIC_INTERVAL to the interval (in 20 ms units) between *Pilot Strength Measurement Mini Messages*.
- A *Mobile Assisted Burst Operation Parameters Message* may specify threshold based pilot strength reporting. If threshold based reporting information is included, the base station shall set THRESHOLD_FLAG to '1' and include the appropriate threshold based reporting fields. Otherwise, the base station shall set THRESHOLD_FLAG to '0'. If THRESHOLD_FLAG is set to '1', the base station shall perform the following procedures:
  - The base station shall set PS_FLOOR_HIGH to the high water mark for lower limit threshold for which the mobile station is to send *Pilot Strength Measurement Mini Messages*.
  - The base station shall set PS_FLOOR_LOW to the low water mark for lower limit threshold for which the mobile station is to send *Pilot Strength Measurement Mini Messages*.
  - The base station shall set PS_CEILING_HIGH to the high water mark for upper limit threshold for which the mobile station is to send *Pilot Strength Measurement Mini Messages*.
  - The base station shall set PS_CEILING_LOW to the low water mark for upper limit threshold for which the mobile station is to send *Pilot Strength Measurement Mini Messages*.
  - The base station shall set THRESHOLD_INTERVAL to the interval (in 20 ms units) between *Pilot Strength Measurement Mini Messages*.

3.6.6.2.2.16 Processing of the Handoff Supplementary Information Notification Message

If the message contains any records with HO_SUP_REC_TYPE field set to '000', then the base station should use the AP_ID, IOS_MSC_ID and IOS_CELL_ID corresponding to the

PN for this mobile[8].

3.6.6.2.3 Active Set Maintenance

The base station shall maintain an Active Set for each mobile station under its control as follows:

- When the base station sends the *Channel Assignment Message*, it shall initialize the Active Set to contain only the pilot associated with the assigned Forward Traffic Channel.
- When the base station sends the *Extended Channel Assignment Message*, it shall initialize the Active Set to contain all pilots included in the message.
- When the base station sends an *Extended Handoff Direction Message*, *General Handoff Direction Message*, or *Universal Handoff Direction Message*, it shall add to the Active Set, before the action time of the message, all pilots included in the message, if they are not already in the Active Set.
- The base station shall delete the pilots that were not included in the most recent *Extended Handoff Direction Message*, *General Handoff Direction Message*, or *Universal Handoff Direction Message*, from the Active Set upon receipt of the *Handoff Completion Message* or *Extended Handoff Completion Message*.

3.6.6.2.4 Soft Handoff

The base station should use soft handoff when directing a mobile station from one Forward Traffic Channel to another Forward Traffic Channel having the same frequency assignment.

3.6.6.2.4.1 Receiving During Soft Handoff

Each base station in the Active Set shall demodulate the Reverse Traffic Channel. The base station should provide diversity combining of the demodulated signals obtained by each base station in the Active Set.

3.6.6.2.4.2 Transmitting During Soft Handoff

The base station shall begin transmitting identical modulation symbols on all Forward Traffic Channels specified in an *Extended Handoff Direction Message* or *General Handoff Direction Message*, or *Universal Handoff Direction Message* (with the possible exception of the power control subchannel) by the action time of the message.

The base station shall transmit identical power control bits on all identical power control subchannels that were identified as such in the last *Extended Handoff Direction Message*, or *General Handoff Direction Message*, or *Universal Handoff Direction Message*.

[8] The base station may use these for handoff related signaling as specified in [48].

The base station shall use the same long code mask on all Forward Traffic Channels whose associated pilots are in the Active Set.

3.6.6.2.4.3 Call Rescue Soft Handoff

The base station shall support the call rescue feature.

The call rescue feature can be enabled or disabled by the base station. If the call rescue feature is enabled and the base station detects that a mobile station having MOB_P_REV greater than seven has disabled its transmitters, then the base station shall initiate call rescue procedures.

A base station that is configured with a Rescue Channel shall allocate a Walsh Code for the Rescue Channel. If the base station is designated as a rescue cell candidate, then the base station shall monitor the Reverse Traffic Channel in order to acquire a mobile station attempting call rescue soft handoff. If the base station acquires the mobile station, then it should begin immediately transmitting to the mobile station using the Rescue Channel Walsh Code.

3.6.6.2.5 Reserved

3.6.7 CDMA Tiered Services

3.6.7.1 Overview

3.6.7.1.1 Definition

The base station may support Tiered Services to provide individual users or groups of users with custom services and special features based upon their location. The base station may also support Tiered Services to provide private network support. Important to the operation of CDMA Tiered Services is the concept of User Zones. It is via User Zones by which the base station offers custom services based upon the mobile station location.

User Zones are associated with a set of features and services, plus a geographic area in which the User Zone features/services are made available to the customers that have subscribed to that User Zone. The boundary of the User Zone Geographic area may be established based on the coverage area of a public or private base station, or it may be established independent of RF topology.

User Zones may be supported by the public system on the same frequency as the serving base station, or they may be supported on a private system operating on a different frequency.

3.6.7.1.2 Types of User Zones

User Zones may be of two basic types:

- *Broadcast User Zones*: Broadcast User Zones are identified to the mobile station using the Paging Channel or the Primary Broadcast Control Channel. In this case, the base station broadcasts messages on the Paging Channel or the Primary Broadcast Control Channel identifying the User Zones that fall within the coverage area of the particular cell/sector. A mobile station, as part of its monitoring of the Paging Channel or the Primary Broadcast Control Channel, will identify the presence of a particular User Zone.
- *Mobile Specific User Zones*: Mobile Specific User Zones are not broadcast by the base station. A mobile station may use other overhead message parameters and compare them with internally stored User Zone parameters to identify the presence of a particular User Zone. These parameters may include: SID, NID, BASE_ID, BASE_LAT, and BASE_LONG.

3.6.7.2 Requirements

If the base station supports CDMA Tiered Services, the base station sends the following messages to assist the mobile station in identifying the presence of User Zones and to validate the User Zone requested by a mobile station:

- *User Zone Identification Message*
- *Private Neighbor List Message*
- *User Zone Reject Message*
- *User Zone Update Message*

3.6.7.2.1 User Zone Identification Message

The base station identifies Broadcast User Zones supported by the base station by sending the *User Zone Identification Message* on the Paging Channel or the Primary Broadcast Control Channel. The base station should list the UZID of each Broadcast User Zone supported by the base station.

3.6.7.2.2 Private Neighbor List Message

The base station sends a Private Neighbor List and identifies the User Zones supported by its private neighbor base stations by sending the *Private Neighbor List Message* on the Paging Channel or the Primary Broadcast Control Channel. The *Private Neighbor List Message* shall list no more than N_{8m} private neighbors.

3.6.7.2.3 User Zone Update Message and User Zone Reject Message on f-dsch

For a mobile station operating in the *Traffic Channel Substate* or *Release Substate* of the *Mobile Station Control on the Traffic Channel State*, the base station may update the User Zone associated with the mobile station by sending a *User Zone Update Message*. The base station may also send a *User Zone Reject Message* to reject the User Zone requested by the mobile station in the *Origination Message, Page Response Message,* or *User Zone Update Request Message*. The base station may include the ASSIGN_UZID field in the *User Zone Reject Message* to assign a User Zone to the mobile station to replace the

rejected User Zone.

3.6.7.2.4 User Zone Reject Message on f-csch

The base station may send the *User Zone Reject Message* on the Paging Channel or the Forward Common Control Channel to reject the User Zone requested by the mobile station in the *Registration Message*, *Origination Message*, or *Page Response Message*. The base station may include the ASSIGN_UZID field in the *User Zone Reject Message* record to assign a User Zone to the mobile station to replace the rejected User Zone.

3.6.8 Call Control Processing

The Call Control consists of the following states:

- *Waiting for Order Substate* - In this substate, the Call Control instance sends the *Alert With Information Message* or the *Extended Alert With Information Message* to the mobile station.
- *Waiting for Answer Substate* - In this substate, the Call Control instance waits for the *Connect Order* from the mobile station.
- *Conversation Substate* - In this substate, the parties involved in this call exchanges Traffic Channel frames in accordance with the current service configuration.
- *Call Release Substate* - In this substate, the Call Control instance waits for the call to be disconnected.

The following messages are processed by the Call Control:

- *Alert With Information Message*
- *Extended Alert with Information Message:*
- *Flash With Information Message*
- *Extended Flash With Information Message*
- *Send Burst DTMF Message*
- *Origination Continuation Message*

The following orders are processed by the Call Control:

- *Continuous DTMF Tone Order*
- *Maintenance Order*
- *Connect Order*

Upon instantiation, the Call Control instance shall perform the following:

- If the call is a mobile station terminated call and the base station set BYPASS_ALERT_ANSWER to '1', the Call Control instance shall enter the *Conversation Substate* (see 3.6.8.2). If the call is a mobile station terminated call and the base station set BYPASS_ALERT_ANSWER to '0', the Call Control instance shall enter the *Waiting for Order Substate* (see 3.6.8.1.1).
- If the call is a mobile-station-originated call, the Call Control instance shall enter the *Conversation Substate* (see 3.6.8.2).

3.6.8.1 Alerting

3.6.8.1.1 Waiting for Order Substate

In this substate, the Call Control instance sends an *Alert With Information Message* or an *Extended Alert With Information Message* to the mobile station.

While in the *Waiting for Order Substate*, the Call Control instance shall perform the following:

- If the Call Control instance receives a "release indication" from the Layer 3, the Call Control instance shall enter the *Call Release Substate*.
- If the Call Control instance receives a "send alert with info message indication" from the Layer 3, the Call Control instance shall send an *Alert with Information Message* or an *Extended Alert With Information Message* to the mobile station within T2b seconds, and enter the *Waiting for Answer Substate*.
- The Call Control instance may send the following messages:
  1. *Alert With Information Message:* The Call Control instance shall enter the *Waiting for Answer Substate*.
  2. *Extended Alert With Information Message:* The Call Control instance shall enter the *Waiting for Answer Substate*.
  3. *Maintenance Order:* The Call Control instance shall enter the *Waiting for Answer Substate*.

3.6.8.1.2 Waiting for Answer Substate

In this substate, the Call Control instance waits for a *Connect Order* from the mobile station.

While in the *Waiting for Answer Substate*, the Call Control instance shall perform the following:

- If the Call Control instance receives a "release indication" from the Layer 3, the Call Control instance shall enter the *Call Release Substate*.

- If the Call Control instance receives a "send alert with info message indication" from the Layer 3, the Call Control instance shall send an *Alert with Information Message* or an *Extended Alert with Information Message* to the mobile station, within T2b seconds, and enter the *Waiting for Answer Substate*.

- The Call Control instance may send the following messages:

  1. *Alert With Information Message*

  2. *Extended Alert With Information Message*

  3. *Maintenance Order*

- If the Call Control instance receives one of the following messages from the Layer 3, the Call Control instance shall process the message according to the specified requirements, if any:

  1. *Connect Order:* The Call Control instance shall enter the *Conversation Substate*.

  2. *Flash With Information Message:* If the message contains a Keypad Facility record with feature codes indicating User Selective Call Forwarding with a pre-registered number, a stored number, or voice mail, the Call Control instance may send a 'call release request' to the Layer 3. If this message contains the Global Emergency Call information record and the call associated with this Call Control instance is a voice call, the base station shall recognize this as an emergency call and should process the message using an implementation-dependent procedure which may include ignoring the dialed digits. If this message contains the Global Emergency Call information record and the call associated with this Call Control instance is not a voice call, the base station may recognize this as an emergency call and should process the message using an implementation-dependent procedure which may include ignoring the dialed digits.

  3. *Extended Flash With Information Message:* If the message contains a Keypad Facility record with feature codes indicating User Selective Call Forwarding with a pre-registered number, a stored number, or voice mail, the Call Control instance may send a 'call release request' to the Layer 3. If this message contains the Global Emergency Call information record and the call associated with this Call Control instance is a voice call, the base station shall recognize this as an emergency call and should process the message using an implementation-dependent procedure which may include ignoring the dialed digits. If this message contains the Global Emergency Call information record and the call associated with this Call Control instance is not a voice call, the base station may recognize this as an emergency call and should process the message using an implementation-dependent procedure which may include ignoring the dialed digits.

4. *Origination Continuation Message*

3.6.8.2 Conversation Substate

While in the *Conversation Substate*, the Call Control instance shall perform the following:

- If the Call Control instance receives a "release indication" from the Layer 3, the Call Control instance shall enter the *Call Release Substate*.

- If the Call Control instance receives a "paca reorig indication" from the Layer 3, the Call Control instance should send either an *Alert With Information Message/Extended Alert With Information Message* which contains a signal information record with the SIGNAL_TYPE field set to '01' or '10', or an *Alert With Information Message/Extended Alert With Information Message* which does not contain a signal information record.

- If the Call Control instance receives a "send alert with info message indication" from Layer 3, the Call Control instance shall send an *Alert with Information Message* or an *Extended Alert With Information Message* to the mobile station within T2b seconds, and enter the *Waiting for Answer Substate*.

- The Call Control instance may send the following messages:

  1. *Alert With Information Message:* If the message contains a signal information record with the SIGNAL_TYPE field set to '01' or '10', or if the message does not contain a signal information record, the Call Control instance shall enter the *Waiting for Answer Substate*.

  2. *Extended Alert With Information Message:* If the message contains a signal information record with the SIGNAL_TYPE field set to '01' or '10', or if the message does not contain a signal information record, the Call Control instance shall enter the *Waiting for Answer Substate*.

  3. *Continuous DTMF Tone Order*

  4. *Flash With Information Message*

  5. *Extended Flash With Information Message*

  6. *Maintenance Order:* The Call Control instance shall enter the *Waiting for Answer Substate*.

  7. *Send Burst DTMF Message*

- If the Call Control instance receives one of the following messages from Layer 3, the Call Control instance shall process the message according to the specified requirements, if any:

1. *Continuous DTMF Tone Order*

2. *Flash With Information Message*: If this message contains the Global Emergency Call information record and the call associated with this Call Control instance is a voice call, the base station shall recognize this as an emergency call and should process the message using an implementation-dependent procedure which may include ignoring the dialed digits. If this message contains the Global Emergency Call information record and the call associated with this Call Control instance is not a voice call, the base station may recognize this as an emergency call and should process the message using an implementation-dependent procedure which may include ignoring the dialed digits.

3. *Extended Flash With Information Message*: If this message contains the Global Emergency Call information record and the call associated with this Call Control instance is a voice call, the base station shall recognize this as an emergency call and should process the message using an implementation-dependent procedure which may include ignoring the dialed digits. If this message contains the Global Emergency Call information record and the call associated with this Call Control instance is not a voice call, the base station may recognize this as an emergency call and should process the message using an implementation-dependent procedure which may include ignoring the dialed digits.

4. *Origination Continuation Message*

5. *Send Burst DTMF Message*

3.6.8.3 Call Release Substate

- The Call Control instance may send the following messages:

  1. *Alert With Information Message:* If the message contains a signal information record with the SIGNAL_TYPE field set to ‘01’ or ‘10’, or if the message does not contain a signal information record, the base station shall enter the *Waiting for Answer Substate*.

  2. *Extended Alert With Information Message:* If the message contains a signal information record with the SIGNAL_TYPE field set to ‘01’ or ‘10’, or if the message does not contain a signal information record, the base station shall enter the *Waiting for Answer Substate*.

  3. *Maintenance Order:* The Call Control instance shall enter the *Waiting for Answer Substate*.

- If the Call Control instance receives one of the following messages from Layer 3, the Call Control instance shall process the message according to the specified requirements, if any:

1. *Connect Order*

2. *Continuous DTMF Tone Order*

3. *Flash With Information Message*: If this message contains the Global Emergency Call information record and the call associated with this Call Control instance is a voice call, the base station shall recognize this as an emergency call and should process the message using an implementation-dependent procedure which may include ignoring the dialed digits. If this message contains the Global Emergency Call information record and the call associated with this Call Control instance is not a voice call, the base station may recognize this as an emergency call and should process the message using an implementation-dependent procedure which may include ignoring the dialed digits.

4. *Extended Flash With Information Message*: If this message contains the Global Emergency Call information record and the call associated with this Call Control instance is a voice call, the base station shall recognize this as an emergency call and should process the message using an implementation-dependent procedure which may include ignoring the dialed digits. If this message contains the Global Emergency Call information record and the call associated with this Call Control instance is not a voice call, the base station may recognize this as an emergency call and should process the message using an implementation-dependent procedure which may include ignoring the dialed digits.

5. *Origination Continuation Message*

6. *Send Burst DTMF Message*

3.6.9 MEID procedures when communicating with MOB_P_REV 6, 7, 8, 9, 10 Mobile Stations

The base station shall conform to the requirements in [47] when communicating with a MOB_P_REV 6, 7, 8, 9, or 10 mobile station equipped with an MEID.

3.7 PDU Formats for Messages

The following sections specify the requirements on the PDU formats transmitted on the f-csch, and the f-dsch.

In any multi-bit field in the following messages, the most significant bit (MSB) shall be transmitted first.

3.7.1 Reserved

3.7.2 f-csch

The f-csch is used to send control information to mobile stations that have not been assigned to a Traffic Channel.

3.7.2.1 Reserved

3.7.2.2 Reserved

3.7.2.3 PDU Formats for Messages on the f-csch

The messages sent on the f-csch are summarized in Table 3.7.2.3-1.

Table 3.7.2.3-1. f-csch Messages

Message Name	MSG_TAG	Section Number	Primary BCCH	F-CCCH	PCH	P_REV_IN_USE[9]
System Parameters Message	SPM	3.7.2.3.2.1	N	N	Y	All
Access Parameters Message	APM	3.7.2.3.2.2	N	N	Y	All
Neighbor List Message (Band Class 0 only)	NLM	3.7.2.3.2.3	N	N	Y	All
CDMA Channel List Message	CCLM	3.7.2.3.2.4	N	N	Y	All
Order Message	ORDM	3.7.2.3.2.7	N	Y	Y	All
Channel Assignment Message	CAM	3.7.2.3.2.8	N	N	Y	< 8
Data Burst Message[10]	DBM	3.7.2.3.2.9	N	Y	Y	All
Authentication Challenge Message	AUCM	3.7.2.3.2.10	N	Y	Y	All
SSD Update Message	SSDUM	3.7.2.3.2.11	N	Y	Y	All
Feature Notification Message	FNM	3.7.2.3.2.12	N	Y	Y	All
Extended System Parameters Message	ESPM	3.7.2.3.2.13	N	N	Y	All
Extended Neighbor List Message (band classes other than Band Class 0)	ENLM	3.7.2.3.2.14	N	N	Y	1, ≥ 3
Status Request Message	STRQM	3.7.2.3.2.15	N	Y	Y	1, ≥ 3
Service Redirection Message	SRDM	3.7.2.3.2.16	N	Y	Y	All
General Page Message	GPM	3.7.2.3.2.17	N	Y	Y	All

[9] P_REV_IN_USE in this context means P_REV for overhead messages (see 2.6.2.2). P_REV_IN_USE equal to "All" implies all values applicable to the Band Class.

[10] When the *Data Burst Message* is used as a broadcast message, it can be sent on a Broadcast Control Channel other than the Primary Broadcast Control Channel, or on the Forward Common Control Channel when a secondary Broadcast Control Channel is not allocated, i.e., $NUM\_BCCH\_BCAST_S$ equals 0 (see 2.6.2.1.1.3).

Table 3.7.2.3-1. f-csch Messages

Message Name	MSG_TAG	Section Number	Primary BCCH	F-CCCH	PCH	P_REV_IN_USE
Global Service Redirection Message	GSRDM	3.7.2.3.2.18	N	N	Y	All
TMSI Assignment Message	TASM	3.7.2.3.2.19	N	Y	Y	1, ≥ 4
PACA Message	PACAM	3.7.2.3.2.20	N	Y	Y	≥ 4
Extended Channel Assignment Message	ECAM	3.7.2.3.2.21	N	Y	Y	≥ 4
General Neighbor List Message	GNLM	3.7.2.3.2.22	N	N	Y	≥ 4
User Zone Identification Message	UZIM	3.7.2.3.2.23	Y	N	Y	≥ 6
Private Neighbor List Message	PNLM	3.7.2.3.2.24	Y	N	Y	≥ 6
Sync Channel Message	SCHM	3.7.2.3.2.26	N	N	N	All
Extended Global Service Redirection Message	EGSRDM	3.7.2.3.2.27	Y	N	Y	≥ 6
Extended CDMA Channel List Message	ECCLM	3.7.2.3.2.28	Y	N	Y	≥ 6
User Zone Reject Message	UZRM	3.7.2.3.2.29	N	Y	Y	≥ 6
ANSI-41 System Parameters Message	A41SPM	3.7.2.3.2.30	Y	N	N	≥ 7
MC-RR Parameters Message	MCRRPM	3.7.2.3.2.31	Y	N	N	≥ 7
ANSI-41 RAND Message	A41RANDM	3.7.2.3.2.32	Y	N	N	≥ 7
Enhanced Access Parameters Message	EAPM	3.7.2.3.2.33	Y	N	N	≥ 7
Universal Neighbor List Message	UNLM	3.7.2.3.2.34	Y	N	N	≥ 7
Security Mode Command Message	SMCM	3.7.2.3.2.35	N	Y	Y	≥ 7
Universal Page Message	UPM	3.7.2.3.2.36	N	Y	N	≥ 7
Authentication Request Message	AUREQM	3.7.2.3.2.37	N	Y	Y	≥ 10
BCMC Service Parameters Message	BSPM	3.7.2.3.2.38	Y	N	Y	≥ 11

Message Name	MSG_TAG	Section Number	Primary BCCH	F-CCCH	PCH	P_REV_IN_USE
MEID Extended Channel Assignment Message	MECAM	See [47]	N	Y	Y	≥ 6 but < 9
Alternative Technologies Information Message	ATIM	3.7.2.3.2.45	Y	N	Y	≥ 6
Access Point Identification Message	APIDM	3.7.2.3.2.39	Y	N	Y	≥12
Access Point Identification Text Message	APIDTM	3.7.2.3.2.40	Y	N	Y	≥12
Access Point Pilot Information Message	APPIM	3.7.2.3.2.41	Y	N	Y	≥12
General Overhead Information Message	GOIM	3.7.2.3.2.42	Y	N	Y	≥ 12
Flex Duplex CDMA Channel List Message	FDCCLM	3.7.2.3.2.43	Y	N	Y	≥ 12
General Extension Message	GEM	3.7.2.3.2.44	N	Y	Y	≥ 12

3.7.2.3.1 Reserved

3.7.2.3.2 Message Body Contents

The following sections specify the contents of message body for each message that may be sent on the f-csch.

3.7.2.3.2.1 System Parameters Message

MSG_TAG: SPM

Field	Length (bits)
PILOT_PN	9
CONFIG_MSG_SEQ	6
SID	15
NID	16
REG_ZONE	12
TOTAL_ZONES	3
ZONE_TIMER	3
MULT_SIDS	1
MULT_NIDS	1
BASE_ID	16
BASE_CLASS	4
PAGE_CHAN	3
MAX_SLOT_CYCLE_INDEX	3
HOME_REG	1
FOR_SID_REG	1
FOR_NID_REG	1
POWER_UP_REG	1
POWER_DOWN_REG	1
PARAMETER_REG	1
REG_PRD	7
BASE_LAT	22
BASE_LONG	23
REG_DIST	11
SRCH_WIN_A	4

(continues on next page)

Field	Length (bits)
SRCH_WIN_N	4
SRCH_WIN_R	4
NGHBR_MAX_AGE	4
PWR_REP_THRESH	5
PWR_REP_FRAMES	4
PWR_THRESH_ENABLE	1
PWR_PERIOD_ENABLE	1
PWR_REP_DELAY	5
RESCAN	1
T_ADD	6
T_DROP	6
T_COMP	4
T_TDROP	4
EXT_SYS_PARAMETER	1
EXT_NGHBR_LST	1
GEN_NGHBR_LST	1
GLOBAL_REDIRECT	1
PRI_NGHBR_LST	1
USER_ZONE_ID	1
EXT_GLOBAL_REDIRECT	1
EXT_CHAN_LST	1
T_TDROP_RANGE_INCL	1
T_TDROP_RANGE	0 or 4
NEG_SLOT_CYCLE_INDEX_SUP	1
CRRM_MSG_IND	1
NUM_OPT_MSG_BITS	4
AP_PILOT_INFO	0 or 1
AP_IDT	0 or 1
AP_ID_TEXT	0 or 1
GEN_OVHD_INF_IND	0 or 1
FD_CHAN_LST_IND	0 or 1
ATIM_IND	0 or 1

RESERVED	0 or (NUM_OPT_MSG_BITS – 6)
APPIM_PERIOD_INDEX	0 or 3
GEN_OVHD_CYCLE_INDEX	0 or 3
ATIM_CYCLE_INDEX	0 or 3
ADD_LOC_INFO_INCL	1
LOC_UNC_H	0 or 4
HEIGHT	0 or 14
LOC_UNC_V	0 or 4

PILOT_PN - Pilot PN sequence offset index.

The base station shall set this field to the pilot PN sequence offset for this base station, in units of 64 PN chips.

CONFIG_MSG_SEQ - Configuration message sequence number.

The base station shall set this field to CONFIG_SEQ (see 3.6.2.2).

SID - System identification.

The base station shall set this field to the system identification number for this system (see 2.6.5.2).

NID - Network identification.

This field serves as a sub-identifier of a system as defined by the owner of the SID.

The base station shall set this field to the network identification number for this network (see 2.6.5.2).

REG_ZONE - Registration zone.

The base station shall set this field to its registration zone number (see 2.6.5.1.5).

TOTAL_ZONES - Number of registration zones to be retained.

The base station shall set this field to the number of registration zones the mobile station is to retain for purposes of zone-based registration (see 2.6.5.1.5).

If zone-based registration is to be disabled, the base station shall set this field to ‘000’.

ZONE_TIMER - Zone timer length.

The base station shall set this field to the ZONE_TIMER value shown in Table 3.7.2.3.2.1-1 corresponding to the length of the zone registration timer to be used by mobile stations.

Table 3.7.2.3.2.1-1. Value of Zone Timer

ZONE_TIMER Value (binary)	Timer Length (Minutes)
000	1
001	2
010	5
011	10
100	20
101	30
110	45
111	60

MULT_SIDS - Multiple SID storage indicator.

If mobile stations may store entries of SID_NID_LIST containing different SIDs, the base station shall set this field to ‘1’; otherwise the base station shall set this field to ‘0’.

MULT_NIDS - Multiple NID storage indicator.

If mobile stations may store multiple entries of SID_NID_LIST having the same SID (with different NIDs), the base station shall set this field to ‘1’; otherwise the base station shall set this field to ‘0’.

BASE_ID - Base station identification.

The base station shall set this field to its identification number.

BASE_CLASS - Base station class.

The base station shall set this field as follows:

For Band Class 1 and 4, the base station shall set this field to ‘0001’; otherwise, the base station shall set this field to ‘0000’.

PAGE_CHAN - Number of Paging Channels.

The base station shall set this field to the number of Paging Channels on this CDMA Channel. The base station shall not set this field to ‘000’.

MAX_SLOT_CYCLE_INDEX- Maximum slot cycle index.

The base station shall set this field to the SLOT_CYCLE_INDEX value corresponding to the maximum slot cycle length permitted (see 2.6.2.1.1).

HOME_REG - Home registration indicator.

If mobile stations that are not roaming (see 2.6.5.3) and have MOB_TERM_HOME equal to '1' are to be enabled for autonomous registrations, the base station shall set this field to '1'. If such mobile stations are not to be enabled for autonomous registration, the base station shall set this field to '0'.

FOR_SID_REG - SID roamer registration indicator.

If mobile stations that are foreign SID roamers (see 2.6.5.3) and have MOB_TERM_FOR_SID equal to '1' are to be enabled for autonomous registration, the base station shall set this field to '1'. If such mobile stations are not to be enabled for autonomous registration, the base station shall set this field to '0'.

FOR_NID_REG - NID roamer registration indicator.

If mobile stations that are foreign NID roamers (see 2.6.5.3) and have MOB_TERM_FOR_NID equal to '1' are to be enabled for autonomous registration, the base station shall set this field to '1'. If such mobile stations are not to be enabled for autonomous registration, the base station shall set this field to '0'.

POWER_UP_REG - Power-up registration indicator.

If mobile stations enabled for autonomous registration are to register immediately after powering on and receiving the system overhead messages, the base station shall set this field to '1'; otherwise, the base station shall set this field to '0'.

POWER_DOWN_REG - Power-down registration indicator.

If mobile stations enabled for autonomous registration are to register immediately before powering down, the base station shall set this field to '1'; otherwise, the base station shall set this field to '0'.

PARAMETER_REG - Parameter-change registration indicator.

If mobile stations are to register on parameter change events as specified in 2.6.5.1.6, the base station shall set this field to '1'. If not, the base station shall set this field to '0'.

REG_PRD - Registration period.

If mobile stations are not to perform timer-based registration, the base station shall set this field to '0000000'. If mobile stations are to perform timer-based registration, the base station shall set this field to the value in the range 29 to 85 inclusive, such that the desired timer value is

$$\lfloor 2^{\mathrm{REG\_PRD}/4} \rfloor \times 0.08 \text{ seconds.}$$

BASE_LAT - Base station latitude.

The base station shall set this field to its latitude in units of 0.25 second, expressed as a two's complement signed number with positive numbers signifying North latitudes. The base station shall set this field to a value in the range -1296000 to 1296000 inclusive (corresponding to a range of -90° to +90°).

The base station shall set this field to all zeros if its latitude is not known.

BASE_LONG - Base station longitude.

The base station shall set this field to its longitude in units of 0.25 second, expressed as a two's complement signed number with positive numbers signifying East longitude. The base station shall set this field to a value in the range -2592000 to 2592000 inclusive (corresponding to a range of -180° to +180°).

The base station shall set this field to all zeros if its longitude is not known.

REG_DIST - Registration distance.

If mobile stations are to perform distance-based registration, the base station shall set this field to the non-zero "distance" beyond which the mobile station is to re-register (see 2.6.5.1.4). If mobile stations are not to perform distance-based registration, the base station shall set this field to 0.

SRCH_WIN_A - Search window size for the Active Set and Candidate Set.

The base station shall set this field to the value shown in Table 2.6.6.2.1-1 corresponding to the search window size to be used by mobile stations for the Active Set and Candidate Set.

SRCH_WIN_N - Search window size for the Neighbor Set.

The base station shall set this field to the value shown in Table 2.6.6.2.1-1 corresponding to the search window size to be used by mobile stations for the Neighbor Set.

SRCH_WIN_R - Search window size for the Remaining Set.

The base station shall set this field to the value shown in Table 2.6.6.2.1-1 corresponding to the search window size to be used by mobile stations for the Remaining Set.

NGHBR_MAX_AGE - Neighbor Set maximum AGE.

The base station shall set this field to the maximum AGE value beyond which mobile stations are to drop members from the Neighbor Set (see 2.6.6.2.6.3).

PWR_REP_THRESH - Power control reporting threshold.

The base station shall set this field to the number of bad frames (see [2]) to be received in a measurement period on the channel which carries the Power Control Subchannel before mobile stations are to generate a *Power Measurement Report Message* (see 2.6.4.1.1). If the base station sets PWR_THRESH_ENABLE to '1', it shall not set this field to '00000'.

PWR_REP_FRAMES - Power control reporting frame count.

The base station shall set this field to the value such that the number given by

$$\lfloor 2^{(\mathrm{PWR\_REP\_FRAMES}/2)} \times 5 \rfloor \text{ frames}$$

is the number of frames over which mobile stations are to count frame errors.

PWR_THRESH_ENABLE - Threshold report mode indicator.

If mobile stations are to generate threshold *Power Measurement Report Messages*, the base station shall set this field to '1'. If mobile stations are not to generate threshold *Power Measurement Report Messages*, the base station shall set this field to '0'.

PWR_PERIOD_ENABLE - Periodic report mode indicator.

If mobile stations are to generate periodic *Power Measurement Report Messages*, the base station shall set this field to '1'. If mobile stations are not to generate periodic *Power Measurement Report Messages*, the base station shall set this field to '0'.

PWR_REP_DELAY - Power report delay.

The period that mobile stations wait following a *Power Measurement Report Message* before restarting frame counting for power control purposes.

The base station shall set this field to the power report delay value, in units of 4 frames (see 2.6.4.1.1).

RESCAN - Rescan indicator.

If mobile stations are to re-initialize and re-acquire the system upon receiving this message, the base station shall set this field to '1'; otherwise, the base station shall set this field to '0'.

T_ADD - Pilot detection threshold.

This value is used by the mobile station to trigger the transfer of a pilot from the Neighbor Set or Remaining Set to the Candidate Set (see 2.6.6.2.6) and to trigger the sending of the *Pilot Strength Measurement Message* or *Extended Pilot Strength Measurement Message* initiating the handoff process (see 2.6.6.2.5.2).

The base station shall set this field to the pilot detection threshold, expressed as an unsigned binary number equal to $\lfloor -2 \times 10 \times \log_{10} E_c/I_0 \rfloor$.

T_DROP - Pilot drop threshold.

This value is used by mobile stations to start a handoff drop timer for pilots in the Active Set and the Candidate Set (see 2.6.6.2.3).

The base station shall set this field to the pilot drop threshold, expressed as an unsigned binary number equal to $\lfloor -2 \times 10 \times \log_{10} E_c/I_0 \rfloor$.

T_COMP - Active Set versus Candidate Set comparison threshold.

Mobile stations transmit a *Pilot Strength Measurement Message* or an *Extended Pilot Strength Measurement Message* when the strength of a pilot in the Candidate Set exceeds that of a pilot in the Active Set by this margin (see 2.6.6.2.5.2).

The base station shall set this field to the threshold Candidate Set pilot to Active Set pilot ratio, in units of 0.5 dB.

T_TDROP - Drop timer value.

Timer value after which an action is taken by mobile stations for a pilot that is a member of the Active Set or Candidate Set, and whose strength has not become greater than T_DROP. If the pilot is a member of the Active Set, a *Pilot Strength Measurement Message* or an *Extended Pilot Strength Measurement Message* is issued. If the pilot is a member of the Candidate Set, it will be moved to the Neighbor Set.

The base station shall set this field to the T_TDROP value shown in Table 2.6.6.2.3-1 corresponding to the drop timer value to be used by mobile stations.

EXT_SYS_PARAMETER - *Extended System Parameters Message* indicator.

The base station shall set this field to ‘1’.

EXT_NGHBR_LST - *Extended Neighbor List Message* indicator.

The base station sets this field to ‘1’ when it sends the *Extended Neighbor List Message* on the Paging Channel; otherwise the base station sets this field to ‘0’.

If the base station is operating in Band Class 1, Band Class 3, or Band Class 4 with MIN_P_REV less than seven, it shall set this field to ‘1’. If the base station is operating in Band Class 0, it shall set this field to ‘0’.

GEN_NGHBR_LST - *General Neighbor List Message* indicator.

If the base station is sending the *General Neighbor List Message* on the Paging Channel, it shall set this field to ‘1’; otherwise, it shall set this field to ‘0’.

If the base station is operating in Band Class 1, Band Class 3, or Band Class 4 with MIN_P_REV greater than or equal to seven, and if EXT_NGHBR_LST is set to ‘0’, the base station shall set this field to ‘1’.

If the base station is operating in Band Class 0 with MIN_P_REV greater than or equal to seven and if the *Neighbor List Message* is not sent, the base station shall set this field to ‘1’.

If the base station is operating in a band class other than Band Class 1, Band Class 3, or Band Class 4, and if EXT_NGHBR_LST is set to ‘0’, the base station shall set this field to ‘1’.

GLOBAL_REDIRECT - *Global Service Redirection Message* indicator.

If the base station is sending the *Global Service Redirection Message* on the Paging Channel, it shall set this field to ‘1’; otherwise, it shall set this field to ‘0’.

PRI_NGHBR_LST - *Private Neighbor List Message* indicator.

If the base station is sending the *Private Neighbor List Message* on the Paging Channel, it shall set this field to ‘1’; otherwise, it shall set this field to ‘0’.

USER_ZONE_ID - *User Zone Identification Message* indicator.

If the base station is sending the *User Zone Identification Message* on the Paging Channel, it shall set this field to ‘1’; otherwise, it shall set this field to ‘0’.

EXT_GLOBAL_REDIRECT - Extended *Global Service Redirection Message* indicator.

If the base station is sending the *Extended Global Service Redirection Message* on the Paging Channel, it shall set this field to ‘1’; otherwise, the base station shall set this field to ‘0’.

EXT_CHAN_LST - Extended CDMA Channel List Message indicator.

The base station shall set this field to ‘1’, if the *Extended Channel List Message* is sent on the Paging Channel, otherwise, it shall set this field to ‘0’.

T_TDROP_RANGE_INCL - Drop timer range value included indicator.

The base station shall set this field to '1' if the T_TDROP_RANGE field is included in this message; otherwise, the base station shall set this field to '0'.

T_TDROP_RANGE - Drop timer range value.

Timer range value to use in association with the T_TDROP parameter when determining the drop timer expiration.

If T_TDROP_RANGE_INCL is set to '0', the base station shall omit this field; otherwise, the base station shall set this field to the T_TDROP_RANGE value shown in Table 2.6.6.2.3-2 corresponding to the timer expiration range value to be used by the mobile station.

NEG_SLOT_CYCLE_INDEX_SUP - Negative slot cycle index supported indicator.

The base station shall set this field to '1' if it supports negative values of the preferred slot cycle index ($SLOT\_CYCLE\_INDEX_p$); otherwise, the base station shall set this field to '0'.

CRRM_MSG_IND - *Call Recovery Request Message* supported indicator.

The base station shall set this field to '0' if the mobile station is not allowed to send a *Call Recovery Request Message*; otherwise, the base station shall set this field to '1'.

NUM_OPT_MSG_BITS - Number of optional overhead messages transmission information bits.

The base station shall set this field to the number of optional overhead messages for which transmission information is included in this message.

AP_PILOT_INFO - *Access Point Pilot Information Message* indicator.

If NUM_OPT_MSG_BITS is equal to or greater than 1, the base station shall include the field AP_PILOT_INFO and shall set this field as shown below; otherwise, the base station shall omit this field.

If the base station is sending the *Access Point Pilot Information Message* on the Paging Channel, it shall set this field to '1'; otherwise, the base station shall set this field to '0'.

AP_IDT - *Access Point Identification Message* indicator.

If NUM_OPT_MSG_BITS is equal to or greater than 2, the base station shall include the field AP_IDT and shall set this field as shown below; otherwise, the base station shall omit this field.

If the base station is sending the *Access Point Identification Message* on the Paging Channel, it shall set this field to '1'; otherwise, the base station shall set this field to '0'.

AP_ID_TEXT - *Access Point Identification Text Message* indicator.

If NUM_OPT_MSG_BITS is equal to or greater than 3, the base station shall include the field AP_ID_TEXT and shall set this field as shown below; otherwise, the base station shall omit this field.

If the base station is sending the *Access Point Identification Text Message* on the Paging Channel, it shall set this field to '1'; otherwise, the base station shall set this field to '0'.

GEN_OVHD_INF_IND - *General Overhead Information Message* indicator.

If NUM_OPT_MSG_BITS is equal to or greater than 4, the base station shall include the field GEN_OVHD_INF_IND and shall set this field as shown below; otherwise, the base station shall omit this field.

If the base station is sending the *General Overhead Information Message* on the Paging Channel, it shall set this field to '1'; otherwise, the base station shall set this field to '0'.

FD_CHAN_LST_IND - *Flex Duplex CDMA Channel List Message* indicator.

If NUM_OPT_MSG is equal to or greater than 5, the base station shall include the field FD_CHAN_LST_IND and shall set this field as shown below; otherwise, the base station shall omit this field.

If the base station is sending the *Flex Duplex CDMA Channel List Message* on the Paging Channel, it shall set this field to '1'; otherwise, the base station shall set this field to '0'.

ATIM_IND - *Alternative Technologies Information Message* indicator.

If NUM_OPT_MSG_BITS is equal to or greater than 6, the base station shall include the field ATIM_IND and shall set this field as shown below; otherwise, the base station shall omit this field.

If the base station is sending the *Alternative Technologies Information Message* on the Paging Channel, it shall set this field to '1'; otherwise, the base station shall set this field to '0'.

RESERVED - Reserved bits.

If NUM_OPT_MSG_BITS is greater than 6, the base station shall include the field RESERVED and shall set this field as shown below; otherwise, the base station shall omit this field.

The base station shall add (NUM_OPT_MSG_BITS – 5) reserved bits. The base station shall set these bits to '0'.

APPIM_PERIOD_INDEX – *Access Point Pilot Information Message* transmission frequency.

If the AP_PILOT_INFO is not included or is included and set to 0, the base station shall omit this field. Otherwise, the base station shall include this field if there are any fields following this field or if the base station needs to set this field to a value other than '000'.

The base station shall set this field to the period index value of *Access Point Pilot Information Message*. The base station shall set this field value in the range '000' – '101', both inclusive.

GEN_OVHD_CYCLE_INDEX – *General Overhead Information Message* transmission frequency.

If the GEN_OVHD_INF_IND is included and set to 1, the base station shall include this field. Otherwise, the base station shall omit this field.

The base station shall set this field to the cycle index value of *General Overhead Message*. The base station shall set this field value in the range '000' – '101', both inclusive.

ATIM_CYCLE_INDEX – *Alternative Technologies Information Message* transmission frequency.

If the ATIM_IND is included and set to 1, the base station shall include this field. Otherwise, the base station shall omit this field.

The base station shall set this field to the cycle index value of *Alternative Technologies Information Message*. The base station shall set this field vale in the range '000' – '101', both inclusive.

ADD_LOC_INFO_INCL – Location information included.

The base station shall set this field to '1' to indicate that the LOC_UNC_H, HEIGHT, and LOC_UNC_V fields are included in this message, otherwise, the base station shall set this field to '0.

LOC_UNC_H – Horizontal location uncertainty.

If ADD_LOC_INFO_INCL is set to '1', the base station shall include this field and set it as shown below; otherwise, the base station shall omit this field.

The base station shall set this field to the circular horizontal location uncertainty, as specified in Table 3.7.2.3.2.1-2. The value of this field indicates the radius of a circular 95% confidence coverage area.

Table 3.7.2.3.2.1-2. Horizontal Position Uncertainty

'0000'	LOC_UNC_H < 20 m
'0001'	20 m • LOC_UNC_H < 40 m
'0010'	40 m • LOC_UNC_H < 70 m
'0011'	70 m • LOC_UNC_H < 100 m
'0100'	100 m • LOC_UNC_H < 200 m
'0101'	200 m • LOC_UNC_H < 400 m
'0110'	400 m • LOC_UNC_H < 700 m
'0111'	700 m • LOC_UNC_H < 1,000 m
'1000'	1,000 m • LOC_UNC_H < 2,000 m
'1001'	2,000 m • LOC_UNC_H < 4,000 m
'1010'	4,000 m • LOC_UNC_H < 7,000 m
'1011'	7,000 m • LOC_UNC_H < 10,000 m
'1100'	10,000 m • LOC_UNC_H < 20,000 m

‘1101’	20,000 m • LOC_UNC_H < 40,000 m
‘1110’	40,000 m • LOC_UNC_H < 70,000 m
‘1111’	70,000 m • LOC_UNC_H

HEIGHT – Height.

If ADD_LOC_INFO_INCL is set to ‘1’, the base station shall include this field and set it as shown below; otherwise, the base station shall omit this field.

The base station shall set this field to the height, above the WGS-84 reference ellipsoid, in units of 1 meter, in the range from -500 m to 15,882 m, where the binary value of the field conveys the height plus 500 m.

The base station shall set this field to all ones if its height is not known.

LOC_UNC_V – Vertical location uncertainty.

If ADD_LOC_INFO_INCL is set to ‘1’, the base station shall include this field and set it as shown below; otherwise, the base station shall omit this field.

The base station set this field to the vertical location uncertainty, as specified in Table 3.7.2.3.2.1-3. The value of this field indicates the one-sigma uncertainty of HEIGHT within the corresponding horizontal coverage area.

The base station shall set this field to all ones if its height is not known.

Table 3.7.2.3.2.1-3. Vertical Position Uncertainty

‘0000’	0< LOC_UNC_V < 1 m
‘0001’	1 m • LOC_UNC_V < 2 m
‘0010’	2 m • LOC_UNC_V < 4 m
‘0011’	4 m • LOC_UNC_V < 7 m
‘0100’	7 m • LOC_UNC_V < 10 m
‘0101’	10 m • LOC_UNC_V < 20 m
‘0110’	20 m • LOC_UNC_V < 40 m
‘0111’	40 m • LOC_UNC_V < 70 m
‘1000’	70 m • LOC_UNC_V < 100 m
‘1001’	100 m • LOC_UNC_V < 200 m
‘1010’	200 m • LOC_UNC_V < 400 m

‘1011’	400 m • LOC_UNC_V < 700 m
‘1100’	700 m • LOC_UNC_V < 1,000 m
‘1101’	1,000 m • LOC_UNC_V < 2,000 m
‘1110’	2,000 m • LOC_UNC_V < 4,000 m
‘1111’	4,000 m • LOC_UNC_V

3.7.2.3.2.2 Access Parameters Message

MSG_TAG: APM

Field	Length (bits)
PILOT_PN	9
ACC_MSG_SEQ	6
ACC_CHAN	5
NOM_PWR	4
INIT_PWR	5
PWR_STEP	3
NUM_STEP	4
MAX_CAP_SZ	3
PAM_SZ	4
PSIST(0-9)	6
PSIST(10)	3
PSIST(11)	3
PSIST(12)	3
PSIST(13)	3
PSIST(14)	3
PSIST(15)	3
MSG_PSIST	3
REG_PSIST	3
PROBE_PN_RAN	4
ACC_TMO	4
PROBE_BKOFF	4
BKOFF	4

(continues on next page)

Field	Length (bits)
MAX_REQ_SEQ	4
MAX_RSP_SEQ	4
AUTH	2
RAND	0 or 32
NOM_PWR_EXT	1
PSIST_EMG_INCL	1
PSIST_EMG	0 or 3
ACCT_INCL	1
ACCT_INCL_EMG	0 or 1
ACCT_AOC_BITMAP_INCL	0 or 1
ACCT_SO_INCL	0 or 1
NUM_ACCT_SO	0 or 4

NUM_ACCT_SO + 1 occurrences of the following record:

{ (NUM_ACCT_SO + 1)

ACCT_AOC_BITMAP1	0 or 5
ACCT_SO	16

} (NUM_ACCT_SO + 1)

ACCT_SO_GRP_INCL	0 or 1
NUM_ACCT_SO_GRP	0 or 3

NUM_ACCT_SO_GRP + 1 occurrences of the following record:

{ (NUM_ACCT_SO_GRP + 1)

ACCT_AOC_BITMAP2	0 or 5
ACCT_SO_GRP	5

} (NUM_ACCT_SO_GRP + 1)

PILOT_PN - Pilot PN sequence offset index.

The base station shall set this field to the pilot PN sequence offset for this base station, in units of 64 PN chips.

ACC_MSG_SEQ - Access parameters message sequence number.

The base station shall set this field to ACC_CONFIG_SEQ (see 3.6.2.2).

ACC_CHAN - Number of Access Channels.

The base station shall set this field to one less than the number of Access Channels associated with this Paging Channel.

NOM_PWR - Nominal transmit power offset.

The base station shall set this field to the correction factor to be used by mobile stations in the open loop power estimate, expressed as a two's complement value in units of 1 dB (see [2]).

INIT_PWR - Initial power offset for access.

The base station shall set this field to the correction factor to be used by mobile stations in the open loop power estimate for the initial transmission on an Access Channel, expressed as a two's complement value in units of 1 dB (see [2]).

PWR_STEP - Power increment.

The base station shall set this field to the value by which mobile stations are to increase their transmit power between successive access probes in an access probe sequence, in units of 1 dB.

NUM_STEP - Number of access probes.

The base station shall set this field to one less than the maximum number of access probes mobile stations are to transmit in a single access probe sequence.

MAX_CAP_SZ - Maximum Access Channel message capsule size.

The base station shall set this field to the value in the range 0 to 7, three less than the maximum number of Access Channel frames in an Access Channel message capsule.

PAM_SZ - Access Channel preamble length.

The base station shall set this field to one less than the number of Access Channel frames that mobile stations are to transmit in each Access Channel preamble.

PSIST(0-9) - Persistence value for access overload classes 0 through 9.

If mobile stations in access overload classes 0 through 9 are permitted to transmit requests on the Access Channel, the base station shall set this field to the persistence value to be used. If such mobile stations are not permitted to transmit requests on the Access Channel, the base station shall set this field to '111111'.

PSIST(10) - Persistence value for access overload class 10 (test mobile stations).

If mobile stations in access overload class 10 are permitted to transmit requests on the Access Channel, the base station shall set this field to the persistence value to be used. If such mobile stations are not permitted to transmit requests on the Access Channel, the base station shall set this field to '111'.

PSIST(11) - Persistence value for access overload class 11 (emergency mobile stations).

If mobile stations in access overload class 11 are permitted to transmit requests on the Access Channel, the base station shall set this field to the persistence value to be used. If such mobile stations are not permitted to transmit requests on the Access Channel, the base station shall set this field to '111'.

PSIST(12) - Persistence value for access overload class 12.

If mobile stations in access overload class 12 are permitted to transmit requests on the Access Channel, the base station shall set this field to the persistence value to be used. If such mobile stations are not permitted to transmit requests on the Access Channel, the base station shall set this field to '111'.

PSIST(13) - Persistence value for access overload class 13.

If mobile stations in access overload class 13 are permitted to transmit requests on the Access Channel, the base station shall set this field to the persistence value to be used. If such mobile stations are not permitted to transmit requests on the Access Channel, the base station shall set this field to '111'.

PSIST(14) - Persistence value for access overload class 14.

If mobile stations in access overload class 14 are permitted to transmit requests on the Access Channel, the base station shall set this field to the persistence value to be used. If such mobile stations are not permitted to transmit requests on the Access Channel, the base station shall set this field to '111'.

PSIST(15) - Persistence value for access overload class 15.

If mobile stations in access overload class 15 are permitted to transmit requests on the Access Channel, the base station shall set this field to the persistence value to be used. If such mobile stations are not permitted to transmit requests on the Access Channel, the base station shall set this field to '111'.

MSG_PSIST - Persistence modifier for Access Channel attempts for message transmissions.

A mobile station multiplies its transmission probability by 2^{-MSG_PSIST} for such attempts.

The base station shall set this field to the persistence modifier for Access Channel attempts for message transmissions.

REG_PSIST - Persistence modifier for Access Channel attempts for registrations which are not responses to the *Registration Request Order*.

A mobile station multiplies its transmission probability by 2^{-REG_PSIST} for such attempts.

The base station shall set this field to the persistence modifier for Access Channel attempts for registrations which are not responses to the *Registration Request Order*.

PROBE_PN_RAN - Time randomization for Access Channel probes.

A mobile station delays its transmission from System Time by RN PN chips, where RN is a number determined by hashing between 0 and $2^{PROBE\_PN\_RAN}$ - 1 PN chips.

The base station shall set this field to the value in the range 0 to 9 inclusive such that the time randomization range is $2^{PROBE\_PN\_RAN}$ - 1 PN chips.

ACC_TMO - Acknowledgment timeout.

The base station shall set this field to two less than the length of time mobile stations are to wait after the end of an Access Channel transmission before determining that the base station did not receive the transmission, in units of 80 ms.

PROBE_BKOFF - Access Channel probe backoff range.

The base station shall set this field to one less than the maximum number of slots mobile stations are to delay due to random backoff between consecutive access probes.

BKOFF - Access Channel probe sequence backoff range.

The base station shall set this field to one less than the maximum number of slots mobile stations are to delay due to random backoff between successive access probe sequences.

MAX_REQ_SEQ - Maximum number of access probe sequences for an Access Channel request.

The base station shall set this field to the maximum number of access probe sequences mobile stations are to transmit for an Access Channel request. The base station shall set this field to a value greater than 0.

MAX_RSP_SEQ - Maximum number of access probe sequences for an Access Channel response.

The base station shall set this field to the maximum number of access probe sequences mobile stations are to transmit for an Access Channel response. The base station shall set this field to a value greater than 0.

AUTH - Authentication mode.

If mobile stations are to include standard authentication data in Access Channel messages, the base station shall set this field to '01'. If mobile stations are not to include authentication data in Access Channel messages, the base station shall set this field to '00'. All other values are reserved.

RAND - Random challenge value.

If the AUTH field is set to '01', the base station shall set this field to the random challenge value to be used by mobile stations for authentication. If the AUTH field is set to any other value, the base station shall omit this field.

NOM_PWR_EXT - Extended nominal transmit power.

If the base station is operating in Band Class 0 or Band Class 3, it shall set this field to '0'; otherwise, it shall set this field as follows:

If the correction factor to be used by mobile stations in the open loop power estimate is between -24 dB and -9 dB inclusive, the base station shall set this field to '1'; otherwise (the correction factor is in the range -8 dB to 7 dB inclusive), the base station shall set this field to '0'.

PSIST_EMG_INCL - Emergency persistence included indicator.

If PSIST_EMG is included in this message, the base station shall set this field to '1'; otherwise, the base station shall set this field to '0'. The base station shall not include PSIST_EMG in this message if the base station supports the Enhanced Access Channel.

PSIST_EMG - Persistence value for emergency call for access overload classes 0 through 9.

If PSIST_EMG_INCL is set to '0', the base station shall omit this field; otherwise, the base station shall set this field as follows:

If a mobile station in access overload classes 0 through 9 is permitted to transmit emergency requests on the Access Channel, the base station shall set this field to the persistence value to be used for the emergency calls. If such a mobile station is not permitted to transmit emergency requests on the Access Channel, the base station shall set this field to '111'.

ACCT_INCL - Access Control based on Call Type (ACCT) information included indicator.

If the base station enables ACCT for at least one service option, the base station shall set this field to '1'; otherwise, the base station shall set this field to '0'.

If the base station sets this field to '1', then the base station shall also set at least one of ACCT_SO_INCL or ACCT_SO_GRP_INCL to '1'.

ACCT_INCL_EMG - Access Control based on Call Type (ACCT) includes emergency calls indicator.

If ACCT_INCL is set to '0', the base station shall omit this field; otherwise, the base station shall include this field and set it as follows:

The base station shall set this field to '0' if the mobile station is not to apply ACCT to a call that is recognized by the mobile station to be an emergency call; otherwise, the base station shall set this field to '1'.

ACCT_AOC_BITMAP_INCL - Access Control based on Call Type (ACCT) access overload class bitmap included indicator.

If ACCT_INCL is set to '0', the base station shall omit this field; otherwise, the base station shall include this field and set it as follows:

The base station shall set this field to '0' if all mobile stations are to apply ACCT regardless of their access overload classes; otherwise, the base station shall set this field to '1' to indicate that the mobile station is to apply ACCT according to its access overload class.

ACCT_SO_INCL - Access Control based on Call Type (ACCT) service option included indicator.

If ACCT_INCL is set to '0', the base station shall omit this field; otherwise, the base station shall include this field and set it as follows:

The base station shall set this field to '1' if at least one occurrence of the ACCT_SO field is included in this message; otherwise, the base station shall set this field to '0'.

NUM_ACCT_SO - Number of service options for Access Control based on Call Type (ACCT).

If ACCT_SO_INCL is not included, or is included and set to '0', then the base station shall omit this field; otherwise, the base station shall include this field and set it to one less than the number of occurrences of the ACCT_SO field included in this message.

If ACCT_SO_INCL is included and set to '1', then the base station shall include NUM_ACCT_SO + 1 occurrences of the following variable-field record:

ACCT_AOC_BITMAP1 - Access Control based on Call Type (ACCT) access overload class bitmap.

If ACCT_AOC_BITMAP_INCL is set to '0', then the base station shall omit this field; otherwise, the base station shall include this field and set it as follows:

This field consists of the subfields defined in Table 3.7.2.3.2.2-1.

Table 3.7.2.3.2.2-1. ACCT Access Overload Class Bitmap Subfields.

Subfield	Length (bits)	Subfield Description
ACCOLC_0_1	1	Access overload classes 0 and 1
ACCOLC_2_3	1	Access overload classes 2 and 3
ACCOLC_4_5	1	Access overload classes 4 and 5
ACCOLC_6_7	1	Access overload classes 6 and 7
ACCOLC_8_9	1	Access overload classes 8 and 9

The base station shall set a subfield to ‘1’ to indicate that mobile stations having the corresponding access overload class are not permitted to perform access attempts using the associated service option ACCT_SO; otherwise, the base station shall set the subfield to ‘0’.

ACCT_SO - Access Control based on Call Type (ACCT) service option number.

The base station shall set this field to the value of the service option number (as specified in [30]) that has ACCT enabled.

ACCT_SO_GRP_INCL - Access Control based on Call Type (ACCT) service option group included indicator.

If ACCT_INCL is set to ‘0’, the base station shall omit this field; otherwise, the base station shall include this field and set it as follows:

The base station shall set this field to ‘1’ if at least one occurrence of the ACCT_SO_GRP field is included in this message; otherwise, the base station shall set this field to ‘0’.

NUM_ACCT_SO_GRP - Number of service option groups for Access Control based on Call Type (ACCT).

If ACCT_SO_GRP_INCL is not included, or is included and set to ‘0’, then the base station shall omit this field; otherwise, the base station shall include this field and set it to one less than the number of occurrences of the ACCT_SO_GRP field included in this message.

If ACCT_SO_GRP_INCL is included and set to ‘1’, then the base station shall include NUM_ACCT_SO_GRP + 1 occurrences of the following variable-field record:

ACCT_AOC_BITMAP2 - Access Control based on Call Type (ACCT) access overload class bitmap.

If ACCT_AOC_BITMAP_INCL is set to ‘0’, then the base station shall omit this field; otherwise, the base station shall include this field and set it as follows:

This field consists of the subfields defined in Table 3.7.2.3.2.2-1. The base station shall set a subfield to ‘1’ to indicate that mobile stations having the corresponding access overload class are not permitted to perform access attempts using a service option specified by the associated ACCT_SO_GRP field; otherwise, the base station shall set the subfield to ‘0’.

ACCT_SO_GRP - Access Control based on Call Type (ACCT) service option group number.

The base station shall set this field to the value of the service option group number (as specified in [30]) whose members all have ACCT enabled.

3.7.2.3.2.3 Neighbor List Message

MSG_TAG: NLM

Field	Length (bits)
PILOT_PN	9
CONFIG_MSG_SEQ	6
PILOT_INC	4

Zero or more occurrences of the following record:

{

NGHBR_CONFIG	3
NGHBR_PN	9

}

PILOT_PN - Pilot PN sequence offset index.

The base station shall set this field to the pilot PN sequence offset for this base station, in units of 64 PN chips.

CONFIG_MSG_SEQ - Configuration message sequence number.

The base station shall set this field to CONFIG_SEQ (see 3.6.2.2).

PILOT_INC - Pilot PN sequence offset index increment.

A mobile station searches for Remaining Set pilots at pilot PN sequence index values that are multiples of this value.

The base station shall set this field to the pilot PN sequence increment, in units of 64 PN chips, that mobile stations are to use for searching the Remaining Set. The base station should set this field to the largest increment such that the pilot PN sequence offsets of all its neighbor base stations are integer multiples of that increment.

The base station shall set this field to a value in the range 1 to 15 inclusive.

The base station shall include one occurrence of the following two-field record for each member mobile stations are to place in their Neighbor Sets. The base station may include zero or more occurrences of the following record.

NGHBR_CONFIG - Neighbor configuration.

The base station shall set this field to the value shown in Table 3.7.2.3.2.3-1 corresponding to the configuration of this neighbor.

Table 3.7.2.3.2.3-1. Neighbor Configuration Field

Value (binary)	Neighbor Configuration
000	The neighbor base station has the same number of frequencies having Paging Channels as the current base station. The neighbor base station has a CDMA frequency assignment that is same as this current CDMA frequency assignment and with the same number of Paging Channels. The position of the neighbor CDMA frequency assignment in the *CDMA Channel List Message* or the *Extended CDMA Channel List Message* transmitted by the neighbor base station is the same as the position of this current CDMA frequency assignment in the *CDMA Channel List Message* or the *Extended CDMA Channel List Message* transmitted by the current base station.
001	The neighbor base station has the same number of frequencies having Paging Channels as the current base station. The neighbor base station has a CDMA frequency assignment that is same as this current CDMA frequency assignment but possibly with a different number of Paging Channels. The position of the neighbor CDMA frequency assignment in the *CDMA Channel List Message* or the *Extended CDMA Channel List Message* transmitted by the neighbor base station is the same as the position of this current CDMA frequency assignment in the *CDMA Channel List Message* or the *Extended CDMA Channel List Message* transmitted by the current base station. This corresponding neighbor CDMA frequency assignment does have a Primary Paging Channel.
010	The neighbor base station may have a different number of frequencies having Paging Channels as the current base station. The neighbor base station has a Primary Paging Channel on the first CDMA Channel listed in the *CDMA Channel List Message* or the *Extended CDMA Channel List Message* transmitted by the current base station.

Value (binary)	Neighbor Configuration
011	The neighbor base station configuration is unknown but the neighbor base station has a Pilot Channel on the CDMA frequency assignment that is same as this current CDMA frequency assignment.
100-111	Reserved.

NGHBR_PN - Neighbor pilot PN sequence offset index.

The base station shall set this field to the pilot PN sequence offset for this neighbor, in units of 64 PN chips.

3.7.2.3.2.4 CDMA Channel List Message

MSG_TAG: CCLM

Field	Length (bits)
PILOT_PN	9
CONFIG_MSG_SEQ	6

One or more occurrences of the following field:

{

CDMA_FREQ	11

}

PILOT_PN - Pilot PN sequence offset index.

The base station shall set this field to the pilot PN sequence offset for this base station, in units of 64 PN chips.

CONFIG_MSG_SEQ - Configuration message sequence number.

The base station shall set this field to CONFIG_SEQ (see 3.6.2.2).

CDMA_FREQ - CDMA Channel frequency assignment.

The order in which occurrences of this field are included gives the designations of the supported CDMA Channels as CDMA Channel 1 through CDMA Channel N.

Each occurrence of this field shall correspond to a CDMA Channel containing a Paging Channel that is supported by this base station. If the supported CDMA Channels are in the preferred set of CDMA frequency assignments (see [2]), the base station shall include their occurrences of this field first.

The base station shall set each occurrence of this field to the CDMA channel number corresponding to the CDMA frequency assignment for that CDMA Channel (see [2]).

3.7.2.3.2.5 Reserved

This page intentionally left blank.

3.7.2.3.2.6 Reserved

This page intentionally left blank.

3.7.2.3.2.7 Order Message

MSG_TAG: ORDM

Field	Length (bits)
ORDER	6
ADD_RECORD_LEN	3
Order-specific fields (if used)	8 × ADD_RECORD_LEN

ORDER - Order code.

The base station shall set this field to the ORDER code (see 3.7.4) for this type of order.

ADD_RECORD_LEN - Additional record length.

The base station shall set this field to the number of octets in the order-specific fields included in this order record.

Order-specific fields - Order-specific fields.

The base station shall include order-specific fields as specified in 3.7.4 for this type of order.

3.7.2.3.2.8 Channel Assignment Message

MSG_TAG: CAM

Field	**Length (bits)**
ASSIGN_MODE	3
ADD_RECORD_LEN	3
Additional record fields	8 × ADD_RECORD_LEN

If ASSIGN_MODE = ‘000’, the additional record fields shall be:

FREQ_INCL	1
CODE_CHAN	8
CDMA_FREQ	0 or 11
FRAME_OFFSET	4
ENCRYPT_MODE	2
D_SIG_ENCRYPT_MODE	0 or 3
ENC_KEY_SIZE	0 or 3
C_SIG_ENCRYPT_MODE_INCL	1
C_SIG_ENCRYPT_MODE	0 or 3
RESERVED	0 - 7 (as needed)

If ASSIGN_MODE = ‘001’, the additional record fields shall be:

RESPOND	1
FREQ_INCL	1
CDMA_FREQ	0 or 11

One or more occurrences of the following field:

{

PILOT_PN	9

}

RESERVED	0 - 7 (as needed)

If ASSIGN_MODE = '100', the additional record fields shall be:

FREQ_INCL	1
RESERVED	3
BYPASS_ALERT_ANSWER	1
DEFAULT_CONFIG	3
GRANTED_MODE	2
CODE_CHAN	8
FRAME_OFFSET	4
ENCRYPT_MODE	2
BAND_CLASS	0 or 5
CDMA_FREQ	0 or 11
D_SIG_ENCRYPT_MODE	0 or 3
ENC_KEY_SIZE	0 or 3
C_SIG_ENCRYPT_MODE_INCL	1
C_SIG_ENCRYPT_MODE	0 or 3
RESERVED	0 - 7 (as needed)

If ASSIGN_MODE = '101', the additional record fields shall be:

RESPOND	1
FREQ_INCL	1
BAND_CLASS	0 or 5
CDMA_FREQ	0 or 11

One or more occurrences of the following field:

{

PILOT_PN	9

}

RESERVED	0 - 7 (as needed)

ASSIGN_MODE - Assignment mode.

The base station shall set this field to the value shown in Table 3.7.2.3.2.8-1 corresponding to the assignment mode for this assignment.

Table 3.7.2.3.2.8-1. Assignment Mode

Value (binary)	Assignment Mode
000	Traffic Channel Assignment (Band Class 0 only)
001	Paging Channel Assignment (Band Class 0 only)
010	Reserved (Previously: Acquire Analog System)
011	Reserved (Previously: Analog Voice Channel Assignment)
100	Extended Traffic Channel Assignment
101	Extended Paging Channel Assignment
All other values are reserved.	

ADD_RECORD_LEN - Additional record length.

The base station shall set this field to the number of octets in the additional record fields included in this assignment record.

Additional record fields - Additional record fields.

The additional record fields are determined by the value of ASSIGN_MODE, as described below.

If the ASSIGN_MODE field is set to '000', the base station shall include the following fields:

FREQ_INCL - Frequency included indicator.

If the CDMA_FREQ field is included in this assignment record, the base station shall set this bit to '1'. If the CDMA_FREQ field is not included in this assignment record, the base station shall set this bit to '0'.

CODE_CHAN - Code channel.

The base station shall set this field to the code channel index (see [2]) in the range 1 to 63 inclusive that the mobile station is to use on the Fundamental Channel of the Forward Traffic Channel.

CDMA_FREQ - Frequency assignment.

If the FREQ_INCL bit is set to '1', the base station shall set this field to the CDMA Channel number corresponding to the CDMA frequency assignment for the CDMA Channel containing the Forward Traffic Channel the mobile station is to use. If the FREQ_INCL bit is set to '0', the base station shall omit this field.

FRAME_OFFSET - Frame offset.

The Forward and Reverse Traffic Channel frames are delayed FRAME_OFFSET × 1.25 ms relative to system timing (see [2]).

The base station shall set this field to the Forward and Reverse Traffic Channel frame offset.

ENCRYPT_MODE - Message encryption mode.

The base station shall set this field to the ENCRYPT_MODE value shown in Table 3.7.2.3.2.8-2 corresponding to the encrypting mode that is to be used for signaling messages, as specified in 2.3.12.2.

Table 3.7.2.3.2.8-2. Message Encryption Modes

ENCRYPT_MODE Field (binary)	Encryption Mode Used
00	Encryption disabled
01	Basic encryption of call control messages
10	Enhanced encryption of call control messages
11	Extended encryption of call control messages

D_SIG_ENCRYPT_MODE - Dedicated channel signaling encryption mode indicator.

If ENCRYPT_MODE is set to '11', the base station shall include this field and shall set it to the dedicated channel signaling encryption mode, as shown in Table 3.7.4.5-1; otherwise the base station shall omit this field.

ENC_KEY_SIZE - Encryption key size indication.

If ENCRYPT_MODE is set to '10' or '11', the base station shall include this field and shall set it to the encryption key size, as shown in Table 3.7.4.5-2; otherwise, the base station shall omit this field.

C_SIG_ENCRYPT_MODE_INCL - Common channel signaling encryption mode included indicator.

If common channel signaling encryption information is included in this message, the base station shall set this field to ‘1’; otherwise, the base station shall set this field to ‘0’.

C_SIG_ENCRYPT_MODE - Common channel signaling encryption mode indicator.

If C_SIG_ENCRYPT_MODE_INCL is set to ‘1’, the base station shall include this field and shall set it to the common channel signaling encryption mode, as shown in Table 3.7.4.5-1; otherwise, the base station shall omit this field.

RESERVED - Reserved bits.

The base station shall add reserved bits as needed in order to make the total length of the fields after the preceding ADD_RECORD_LEN field through this RESERVED field equal to an integer number of octets. The base station shall set these bits to ‘0’.

If the ASSIGN_MODE field is set to ‘001’, the base station shall include the following fields:

RESPOND - Respond on new Access Channel indicator.

If the mobile station is to retransmit an *Origination Message* or *Page Response Message* after processing this channel assignment, the base station shall set this field to ‘1’. The base station may set this field to ‘0’ only in response to a *Page Response Message*.

FREQ_INCL - Frequency included indicator.

If the CDMA_FREQ field is included in this assignment record, the base station shall set this bit to ‘1’. If the CDMA_FREQ field is not included in this assignment record, the base station shall set this bit to ‘0’.

CDMA_FREQ - Frequency assignment.

If the FREQ_INCL bit is set to ‘1’, the base station shall set this field to the CDMA Channel number corresponding to the CDMA frequency assignment for the CDMA Channel containing the Paging Channel the mobile station is to use. If the FREQ_INCL bit is set to ‘0’, the base station shall omit this field.

PILOT_PN - Pilot PN sequence offset index.

The base station shall include one occurrence of this field for each base station whose Paging Channel may be monitored by the mobile station. For each occurrence, the base station shall set this field to the pilot PN sequence offset for a base station, in units of 64 PN chips. The base station having this pilot PN sequence offset should support a Primary Paging Channel with the same Paging Channel rate as the current base station.

RESERVED - Reserved bits.

The base station shall add reserved bits as needed in order to make the total length of the fields, after the preceding ADD_RECORD_LEN field through this RESERVED field, equal to an integer number of octets. The base station shall set these bits to '0'.

If the ASSIGN_MODE field is set to '100', the base station shall include the following fields:

FREQ_INCL - Frequency included indicator.

If the BAND_CLASS and CDMA_FREQ fields are included in this assignment record, the base station shall set this bit to '1'. If the BAND_CLASS and CDMA_FREQ fields are not included in this assignment record, the base station shall set this bit to '0'.

RESERVED - Reserved bits.

The base station shall set this field to '000'.

BYPASS_ALERT_ANSWER - Bypass alert indicator.

If the MOB_P_REV of the current band class of the mobile station is less than or equal to three, the base station shall set this field to '0'; otherwise, the base station shall set this field as follows.

If the mobile station is to bypass the *Waiting for Order Substate* and the *Waiting for Mobile Station Answer Substate*, the base station shall set this field to '1'; otherwise, the base station shall set this field to '0'.

DEFAULT_CONFIG - Default Configuration.

If the GRANTED_MODE field is set to '00', the base station shall set this field as specified in Table 3.7.2.3.2.8-3 to indicate an initial multiplex option and radio configuration for the Forward and Reverse Traffic Channels.

Table 3.7.2.3.2.8-3. Default Configuration

Value (binary)	Default Configuration
000	Multiplex Option 1 and Radio Configuration 1 for both the Forward Traffic Channel and the Reverse Traffic Channel
001	Multiplex Option 2 and Radio Configuration 2 for both the Forward Traffic Channel and the Reverse Traffic Channel
010	Multiplex Option 1 and Radio Configuration 1 for the Forward Traffic channel; Multiplex Option 2 and Radio Configuration 2 for the Reverse Traffic channel
011	Multiplex Option 2 and Radio Configuration 2 for the Forward Traffic channel; Multiplex Option 1 and Radio Configuration 1 for the Reverse Traffic channel
All other values are reserved.	

GRANTED_MODE - Granted mode.

The base station shall set this field to ‘00’ to indicate that the mobile station is to use an initial service configuration consisting of the multiplex option and radio configuration defined by the DEFAULT_CONFIG field for the Forward and Reverse Traffic Channels, and to indicate that service negotiation is to take place before the base station sends the first *Service Connect Message*.

The base station shall set this field to ‘01’ to indicate that the mobile station is to use an initial service configuration consisting of the default multiplex option and transmission rates corresponding to the service option requested by the mobile station either in the *Origination Message*, or *Page Response Message*, and to indicate that service negotiation is to take place before the base station sends the first *Service Connect Message*.

The base station shall set this field to '10' to indicate that the mobile station is to use an initial service configuration consisting of the default multiplex option and transmission rates corresponding to the service option requested by the mobile station either in the *Origination Message*, or *Page Response Message*, and to indicate that service negotiation is not to take place before the base station sends the first *Service Connect Message*.

CODE_CHAN - Code channel.

The base station shall set this field to the code channel index (see [2]) in the range 1 to 63 inclusive that the mobile station is to use on the Fundamental Channel of the Forward Traffic Channel.

FRAME_OFFSET - Frame offset.

The Forward and Reverse Traffic Channel frames are delayed FRAME_OFFSET × 1.25 ms relative to system timing (see [2]).

The base station shall set this field to the Forward and Reverse Traffic Channel frame offset.

ENCRYPT_MODE - Message encryption mode.

The base station shall set this field to the ENCRYPT_MODE value shown in Table 3.7.2.3.2.8-2 corresponding to the encrypting mode that is to be used for signaling messages, as specified in 2.3.12.2.

BAND_CLASS - Band class.

If the FREQ_INCL bit is set to '1', the base station shall set this field to the CDMA band class, as specified in [30], corresponding to the CDMA frequency assignment for the CDMA Channel containing the Forward Traffic Channel the mobile station is to use. If the FREQ_INCL bit is set to '0', the base station shall omit this field.

CDMA_FREQ - Frequency assignment.

If the FREQ_INCL bit is set to '1', the base station shall set this field to the CDMA Channel number, in the specified CDMA band class, corresponding to the CDMA frequency assignment for the CDMA Channel containing the Forward Traffic Channel the mobile station is to use. If the FREQ_INCL bit is set to '0', the base station shall omit this field.

D_SIG_ENCRYPT_MODE - Dedicated channel signaling encryption mode indicator.

If ENCRYPT_MODE is set to '11', the base station shall include this field and shall set it to the dedicated channel signaling encryption mode, as shown in Table 3.7.4.5-1; otherwise the base station shall omit this field.

ENC_KEY_SIZE - Encryption key size indication.

If ENCRYPT_MODE is set to ‘10’ or ‘11’, the base station shall include this field and shall set it to the encryption key size, as shown in Table 3.7.4.5-2; otherwise, the base station shall omit this field.

C_SIG_ENCRYPT_MODE_INCL - Common channel signaling encryption mode included indicator.

If common channel signaling encryption information is included in this message, the base station shall set this field to ‘1’; otherwise, the base station shall set this field to ‘0’.

C_SIG_ENCRYPT_MODE - Common channel signaling encryption mode indicator.

If C_SIG_ENCRYPT_MODE_INCL is set to ‘1’, the base station shall include this field and shall set it to the common channel signaling encryption mode, as shown in Table 3.7.4.5-1; otherwise, the base station shall omit this field.

RESERVED - Reserved bits.

The base station shall add reserved bits as needed in order to make the total length of the fields after the preceding ADD_RECORD_LEN field through this RESERVED field equal to an integer number of octets. The base station shall set these bits to ‘0’.

If the ASSIGN_MODE field is set to ‘101’, the base station shall include the following fields:

RESPOND - Respond on new Access Channel indicator.

If the mobile station is to retransmit an *Origination Message* or *Page Response Message* after processing this channel assignment, the base station shall set this field to ‘1’. The base station may set this field to ‘0’ only in response to a *Page Response Message*.

FREQ_INCL - Frequency included indicator.

If the BAND_CLASS and CDMA_FREQ fields are included in this assignment record, the base station shall set this bit to ‘1’. If the BAND_CLASS and CDMA_FREQ fields are not included in this assignment record, the base station shall set this bit to ‘0’.

BAND_CLASS - Band class.

If the FREQ_INCL bit is set to ‘1’, the base station shall set this field to the CDMA band class, as specified in [30], corresponding to the CDMA frequency assignment for the CDMA Channel containing the Paging Channel the mobile station is to use. If the FREQ_INCL bit is set to ‘0’, the base station shall omit this field.

CDMA_FREQ - Frequency assignment.

If the FREQ_INCL bit is set to '1', the base station shall set this field to the CDMA Channel number, in the specified CDMA band class, corresponding to the CDMA frequency assignment for the CDMA Channel containing the Paging Channel the mobile station is to use. If the FREQ_INCL bit is set to '0', the base station shall omit this field.

PILOT_PN - Pilot PN sequence offset index.

The base station shall include one occurrence of this field for each base station whose Paging Channel may be monitored by the mobile station. For each occurrence, the base station shall set this field to the pilot PN sequence offset for a base station, in units of 64 PN chips. The base station having this pilot PN sequence offset should support a Primary Paging Channel with the same Paging Channel rate as the current base station.

RESERVED - Reserved bits.

The base station shall add reserved bits as needed in order to make the total length of the fields after the preceding ADD_RECORD_LEN field through this RESERVED field equal to an integer number of octets. The base station shall set these bits to '0'.

3.7.2.3.2.9 Data Burst Message

MSG_TAG: DBM

Field	Length (bits)
MSG_NUMBER	8
BURST_TYPE	6
NUM_MSGS	8
NUM_FIELDS	8

NUM_FIELDS occurrences of the following field:

{ (NUM_FIELDS)

CHARi	8

} (NUM_FIELDS)

MSG_NUMBER - Message number.

The base station shall set this field to the number of this message within the data burst stream.

BURST_TYPE - Data burst type.

The base station shall set the value of this field for the type of this data burst as defined in [30]. If the mobile station sets this field equal to '111110', it shall set the first two CHARi fields of this message equal to EXTENDED_BURST_TYPE_INTERNATIONAL as described in the definition of CHARi below. If the base station sets this field equal to '111111', it shall set the first two CHARi fields of this message equal to the EXTENDED_BURST_TYPE as described in the definition of CHARi below.

NUM_MSGS - Number of messages in the data burst stream.

The base station shall set this field to the number of messages in this data burst stream.

NUM_FIELDS - Number of characters in this message.

The base station shall set this field to the number of occurrences of the CHARi field included in this message.

CHARi - Character.

The base station shall include NUM_FIELDS occurrences of this field. The base station shall set these fields to the corresponding octet of the data burst stream.

If the BURST_TYPE field of this message is equal to '111110', the first two CHARi octets shall represent a 16 bit EXTENDED_BURST_TYPE_INTERNATIONAL field, which is encoded as shown below. The first ten bits of this field contain a binary mapping of the Mobile Country Code (MCC) associated with the national standards organization administering the use of the remaining octets of the message. Encoding of the MCC shall be as specified in 2.3.1.3. The remaining six bits of the EXTENDED_BURST_TYPE_INTERNATIONAL field shall specify the COUNTRY_BURST_TYPE. The base station shall set the value of the COUNTRY_BURST_TYPE according to the type of this data burst as defined in standards governed by the country where this data burst type is to be used.

Field	**Length (bits)**
Mobile Country Code	10
COUNTRY_BURST_TYPE	6
Remaining CHARi fields	8 × (NUM_FIELDS - 2)

If the BURST_TYPE field of this message is equal to '111111', the first two CHARi octets shall represent a single, 16 bit, EXTENDED_BURST_TYPE field, as shown below. The base station shall set the value of the EXTENDED_BURST_TYPE according to the type of this data burst as defined in [30].

Field	**Length (bits)**
EXTENDED_BURST_TYPE (first two CHARi fields)	16
Remaining CHARi fields	8 × (NUM_FIELDS - 2)

3.7.2.3.2.10 Authentication Challenge Message

MSG_TAG: AUCM

Field	Length (bits)
RANDU	24
GEN_CMEAKEY	1

RANDU - Random challenge data.

The base station shall set this field as specified in 2.3.12.1.4.

GEN_CMEAKEY - Generate CMEAKEY indicator.

The base station shall set this field to ‘1’ if it wants the MS to generate the CMEAKEY during the Unique Challenge-Response procedure (see 2.3.12.1.4); otherwise, the base station shall set this field to ‘0’.

3.7.2.3.2.11 SSD Update Message

MSG_TAG: SSDUM

Field	Length (bits)
RANDSSD	56

RANDSSD - Random data for the computation of SSD.

The base station shall set this field as specified in 2.3.12.1.5.

3.7.2.3.2.12 Feature Notification Message

MSG_TAG: FNM

Field	Length (bits)
RELEASE	1

One or more occurrences of the following record:

{

RECORD_TYPE	8
RECORD_LEN	8
Type-specific fields	8 × RECORD_LEN

}

RELEASE - Origination completion indicator.

The base station shall set this field to '1' if this message is used to complete an origination request from the mobile station (see 2.6.3.5); otherwise, the base station shall set this field to '0'.

The base station shall include occurrences of the following three-field record as specified in 3.7.5.

RECORD_TYPE - Information record type.

The base station shall set this field as specified in 3.7.5.

RECORD_LEN - Information record length.

The base station shall set this field to the number of octets in the type-specific fields included in this record.

Type-specific fields - Type-specific fields.

The base station shall include type-specific fields as specified in 3.7.5.

3.7.2.3.2.13 Extended System Parameters Message

MSG_TAG: ESPM

Field	Length (bits)
PILOT_PN	9
CONFIG_MSG_SEQ	6
DELETE_FOR_TMSI	1
USE_TMSI	1
PREF_MSID_TYPE	2
MCC	10
IMSI_11_12	7
TMSI_ZONE_LEN	4
TMSI_ZONE	8 × TMSI_ZONE_LEN
BCAST_INDEX	3
IMSI_T_SUPPORTED	1
P_REV	8
MIN_P_REV	8
SOFT_SLOPE	6
ADD_INTERCEPT	6
DROP_INTERCEPT	6
PACKET_ZONE_ID	8
MAX_NUM_ALT_SO	3
RESELECT_INCLUDED	1
EC_THRESH	0 or 5
EC_I0_THRESH	0 or 5
PILOT_REPORT	1
NGHBR_SET_ENTRY_INFO	1
ACC_ENT_HO_ORDER	0 or 1
NGHBR_SET_ACCESS_INFO	1
ACCESS_HO	0 or 1
ACCESS_HO_MSG_RSP	0 or 1

(continues on next page)

Field	Length (bits)
ACCESS_PROBE_HO	0 or 1
ACC_HO_LIST_UPD	0 or 1
ACC_PROBE_HO_OTHER_MSG	0 or 1
MAX_NUM_PROBE_HO	0 or 3
NGHBR_SET_SIZE	0 or 6

If NGHBR_SET_ENTRY_INFO = 1, NGHBR_SET_SIZE occurrences of the following record:

{ (NGHBR_SET_SIZE)

ACCESS_ENTRY_HO	1

} (NGHBR_SET_SIZE)

If NGHBR_SET_ACCESS_INFO = 1, NGHBR_SET_SIZE occurrences of the following record:

{ (NGHBR_SET_SIZE)

ACCESS_HO_ALLOWED	1

} (NGHBR_SET_SIZE)

BROADCAST_GPS_ASST	1
QPCH_SUPPORTED	1
NUM_QPCH	0 or 2
QPCH_RATE	0 or 1
QPCH_POWER_LEVEL_PAGE	0 or 3
QPCH_CCI_SUPPORTED	0 or 1
QPCH_POWER_LEVEL_CONFIG	0 or 3
SDB_SUPPORTED	1
RLGAIN_TRAFFIC_PILOT	6
REV_PWR_CNTL_DELAY_INCL	1
REV_PWR_CNTL_DELAY	0 or 2
AUTO_MSG_SUPPORTED	1
AUTO_MSG_INTERVAL	0 or 3

(continues on next page)

1

Field	Length (bits)
MOB_QOS	1
ENC_SUPPORTED	1
SIG_ENCRYPT_SUP	0 or 8
UI_ENCRYPT_SUP	0 or 8
USE_SYNC_ID	1
CS_SUPPORTED	1
BCCH_SUPPORTED	1
MS_INIT_POS_LOC_SUP_IND	1
PILOT_INFO_REQ_SUPPORTED	1
QPCH_BI_SUPPORTED	0 or 1
QPCH_POWER_LEVEL_BCAST	0 or 3
BAND_CLASS_INFO_REQ	1
ALT_BAND_CLASS	0 or 5
CDMA_OFF_TIME_REP_SUP_IND	1
CDMA_OFF_TIME_REP_THRESHOLD _UNIT	0 or 1
CDMA_OFF_TIME_REP_THRESHOLD	0 or 3
CHM_SUPPORTED	1
RELEASE_TO_IDLE_IND	1
RECONNECT_MSG_IND	1
MSG_INTEGRITY_SUP	1
SIG_INTEGRITY_SUP_INCL	0 or 1
SIG_INTEGRITY_SUP	0 or 8
FOR_PDCH_SUPPORTED	1
PDCH_CHM_SUPPORTED	0 or 1
PDCH_PARMS_INCL	0 or 1
FOR_PDCH_RLGAIN_INCL	0 or 1
RLGAIN_ACKCH_PILOT	0 or 6
RLGAIN_CQICH_PILOT	0 or 6
NUM_SOFT_SWITCHING_FRAMES	0 or 4
NUM_SOFTER_SWITCHING_FRAMES	0 or 4

1

Field	Length (bits)
NUM_SOFT_SWITCHING_SLOTS	0 or 2
NUM_SOFTER_SWITCHING_SLOTS	0 or 2
PDCH_SOFT_SWITCHING_DELAY	0 or 8
PDCH_SOFTER_SWITCHING_DELAY	0 or 8
WALSH_TABLE_ID	0 or 3
NUM_PDCCH	0 or 3

NUM_PDCCH+1 occurrences of the following record:

{ (NUM_PDCCH+1)

FOR_PDCCH_WALSH	0 or 6

} (NUM_PDCCH+1)

IMSI_10_INCL	1
IMSI_10	0 or 4
MAX_ADD_SERV_INSTANCE	0 or 3
RER_MODE_SUPPORTED	1
TKZ_MODE_SUPPORTED	1
TKZ_ID	0 or 8
PZ_HYST_ENABLED	0 or 1
PZ_HYST_INFO_INCL	0 or 1
PZ_HYST_LIST_LEN	0 or 4
PZ_HYST_ACT_TIMER	0 or 8
PZ_HYST_TIMER_MUL	0 or 3
PZ_HYST_TIMER_EXP	0 or 5
EXT_PREF_MSID_TYPE	2
MEID_REQD	0 or 1
AUTO_FCSO_ALLOWED	1
REV_PDCH_SUPPORTED	0 or 1
REV_PDCH_PARMS_INCL	0 or 1
REV_PDCH_RLGAIN_INCL	0 or 1
RLGAIN_SPICH_PILOT	0 or 6
RLGAIN_REQCH_PILOT	0 or 6
RLGAIN_PDCCH_PILOT	0 or 6

REV_PDCH_PARMS_1_INCL	0 or 1
REV_PDCH_TABLE_SEL	0 or 1
REV_PDCH_MAX_AUTO_TPR	0 or 8
REV_PDCH_NUM_ARQ_ROUNDS_NORMAL	0 or 2
REV_PDCH_OPER_PARMS_INCL	0 or 1
REV_PDCH_MAX_SIZE_ALLOWED_ENCODER_PACKET	0 or 4
REV_PDCH_DEFAULT_PERSISTENCE	0 or 1
REV_PDCH_RESET_PERSISTENCE	0 or 1
REV_PDCH_GRANT_PRECEDENCE	0 or 1
REV_PDCH_MSIB_SUPPORTED	0 or 1
REV_PDCH_SOFT_SWITCHING_RESET_IND	0 or 1
SDB_IN_RCNM_IND	0 or 1
SENDING_BSPM	1
BSPM_PERIOD_INDEX	0 or 4
CAND_BAND_INFO_REQ	1
NUM_CAND_BAND_CLASS	0 or 3

NUM_CAND_BAND_CLASS + 1 occurrences of the following record:

{ (NUM_CAND_BAND_CLASS + 1)

CAND_BAND_CLASS	5
SUBCLASS_INFO_INCL	1
SUBCLASS_REC_LEN	0 or 5

SUBCLASS_REC_LEN + 1 occurrences of the following subrecord:

{ (SUBCLASS_REC_LEN + 1)

BAND_SUBCLASS_IND	1

} (SUBCLASS_REC_LEN + 1)

} (NUM_CAND_BAND_CLASS + 1)

TX_PWR_LIMIT_INCL	1
TX_PWR_LIMIT	0 or 6
BYPASS_REG_IND	2

PILOT_PN - Pilot PN sequence offset index.

The base station shall set this field to the pilot PN sequence offset for this base station, in units of 64 PN chips.

CONFIG_MSG_SEQ - Configuration message sequence number.

The base station shall set this field to CONFIG_SEQ (see 3.6.2.2).

DELETE_FOR_TMSI - Delete foreign TMSI.

The base station shall set this field to '1' to cause the mobile station to delete its TMSI if the TMSI was assigned in a different TMSI zone from that specified by the TMSI_ZONE field of this message; otherwise, the base station shall set this field to '0'.

USE_TMSI - Use TMSI indicator.

The base station shall set this field to the value shown in Table 3.7.2.3.2.13-1 corresponding to the type of MSID that the mobile station is to use on the Access Channel.

PREF_MSID_TYPE - Preferred Access Channel Mobile Station Identifier Type.

The base station shall set this field to the value shown in Table 3.7.2.3.2.13-1 and Table 3.7.2.3.2.13-1a corresponding to the type of MSID that the mobile station is to use on the Access Channel.

Table 3.7.2.3.2.13-1. Preferred MSID Types for P_REV_IN_USE < 11

USE_TMSI (binary)	PREF_MSID_ TYPE (binary)	EXT_PREF_ MSID_TYPE (binary)	Description
0	00	N/A	IMSI_S and ESN
0	10	N/A	IMSI
0	11	N/A	IMSI and ESN
1	10	N/A	TMSI (valid TMSI is assigned); IMSI (TMSI not assigned)
1	11	N/A	TMSI (valid TMSI is assigned); IMSI and ESN (TMSI not assigned)

Table 3.7.2.3.2.13-1a. Preferred MSID Types for P_REV_IN_USE >= 11

USE_TMSI (binary)	PREF_MSID_ TYPE (binary)	EXT_PREF_ MSID_TYPE (binary)	Description	
			For Origination, Page Response and Registration messages when P_REV_IN_USE >= 11, MEID_REQD='1', mobile station has a R-UIM which indicates that UIM ID is to be used	All other cases with P_REV_IN_USE >= 11
0	00	00	IMSI, ESN and MEID	IMSI and ESN
0	10	00	IMSI and MEID	IMSI
0	11	00	IMSI, ESN and MEID	IMSI and ESN
1	10	00	TMSI (valid TMSI is assigned); IMSI and MEID (TMSI not assigned)	TMSI (valid TMSI is assigned); IMSI (TMSI not assigned)
1	11	00	TMSI (valid TMSI is assigned); IMSI, ESN, and MEID (TMSI not assigned)	TMSI (valid TMSI is assigned); IMSI and ESN (TMSI not assigned)
0	00	01	IMSI, ESN, and MEID	If the mobile station has a R-UIM which indicates that UIM ID is to be used (see [40]): IMSI and ESN; Otherwise: IMSI and MEID

Table 3.7.2.3.2.13-1a. Preferred MSID Types for P_REV_IN_USE >= 11

USE_TMSI (binary)	PREF_MSID_TYPE (binary)	EXT_PREF_MSID_TYPE (binary)	Description	
			For Origination, Page Response and Registration messages when P_REV_IN_USE >= 11, MEID_REQD='1', mobile station has a R-UIM which indicates that UIM ID is to be used	All other cases with P_REV_IN_USE >= 11
0	10	01	IMSI and MEID	IMSI
0	11	01	IMSI, ESN and MEID	If the mobile station has a R-UIM which indicates that UIM ID is to be used (see [40]): IMSI and ESN; Otherwise: IMSI and MEID
1	10	01	TMSI (valid TMSI is assigned); IMSI and MEID (TMSI not assigned)	TMSI (valid TMSI is assigned); IMSI (TMSI not assigned)

Table 3.7.2.3.2.13-1a. Preferred MSID Types for P_REV_IN_USE >= 11

USE_TMSI (binary)	PREF_MSID_TYPE (binary)	EXT_PREF_MSID_TYPE (binary)	Description	
			For Origination, Page Response and Registration messages when P_REV_IN_USE >= 11, MEID_REQD='1', mobile station has a R-UIM which indicates that UIM ID is to be used	All other cases with P_REV_IN_USE >= 11
1	11	01	TMSI (valid TMSI is assigned); IMSI, ESN, and MEID (TMSI not assigned)	TMSI (valid TMSI is assigned); If valid TMSI is not assigned and the mobile station has a R-UIM which indicates that UIM ID is to be used (see [40]): IMSI and ESN; Otherwise: IMSI and MEID
0	00	11	N/A	If the mobile station has a R-UIM which indicates that UIM ID is to be used (see [40]): IMSI, ESN and MEID; Otherwise: IMSI and MEID

Table 3.7.2.3.2.13-1a. Preferred MSID Types for P_REV_IN_USE >= 11

USE_TMSI (binary)	PREF_MSID_ TYPE (binary)	EXT_PREF_ MSID_TYPE (binary)	Description	
			For Origination, Page Response and Registration messages when P_REV_IN_USE >= 11, MEID_REQD='1', mobile station has a R-UIM which indicates that UIM ID is to be used	All other cases with P_REV_IN_USE >= 11
0	10	11	IMSI and MEID	IMSI
0	11	11	N/A	If the mobile station has a R-UIM which indicates that UIM ID is to be used (see [40]): IMSI, ESN and MEID; Otherwise: IMSI and MEID

Table 3.7.2.3.2.13-1a. Preferred MSID Types for P_REV_IN_USE >= 11

USE_TMSI (binary)	PREF_MSID_TYPE (binary)	EXT_PREF_MSID_TYPE (binary)	Description	
			For Origination, Page Response and Registration messages when P_REV_IN_USE >= 11, MEID_REQD='1', mobile station has a R-UIM which indicates that UIM ID is to be used	All other cases with P_REV_IN_USE >= 11
1	10	11	TMSI (valid TMSI is assigned); IMSI and MEID (TMSI not assigned)	TMSI (valid TMSI is assigned); IMSI (TMSI not assigned)
1	11	11	N/A	If valid TMSI is assigned: TMSI. If valid TMSI is not assigned and the mobile station has a R-UIM which indicates that UIM ID is to be used (see [40]): IMSI, ESN and MEID; Otherwise: IMSI and MEID
All other values are reserved.				

MCC - Mobile Country Code.

The base station shall set this field to the MCC (see 2.3.1)

IMSI_11_12 - 11th and 12th digits of the IMSI.

The base station shall set this field to the IMSI_11_12 (see 2.3.1).

TMSI_ZONE_LEN - TMSI zone length.

The base station shall set this field to the number of octets included in the TMSI_ZONE. The base station shall set this field to a value in the range 1 to 8 inclusive.

TMSI_ZONE - TMSI zone.

The base station shall set this field to the TMSI zone number as specified in [27].

BCAST_INDEX - Broadcast slot cycle index.

To enable periodic broadcast paging, the base station shall set this field to an unsigned 3-bit number in the range 1-7, equal to the broadcast slot cycle index as defined in 2.6.2.1.1.3.3. To disable periodic broadcast paging, the base station shall set this field to '000'.

IMSI_T_SUPPORTED - IMSI_T support indicator.

The base station shall set this field to '1' to indicate support for a 15-digit IMSI_T addressing according to [18].

P_REV - Protocol revision level.

The base station shall set this field to '00001100'.

MIN_P_REV - Minimum protocol revision level.

The base station sets this field to prevent mobile stations which cannot be supported by the base station from accessing the system.

The base station shall set this field to the minimum protocol revision level that it supports.

SOFT_SLOPE - The slope in the inequality criterion for adding a pilot to the Active Set, or dropping a pilot from the Active Set (see 2.6.6.2.3 and 2.6.6.2.5.2).

The base station shall set this field as an unsigned binary number.

ADD_INTERCEPT - The intercept in the inequality criterion for adding a pilot to the Active Set (see 2.6.6.2.5.2).

The base station shall set this field as a two's complement signed binary number, in units of 0.5 dB.

DROP_INTERCEPT - The intercept in the inequality criterion for dropping a pilot from the Active Set (see 2.6.6.2.3).

The base station shall set this field as a two's complement signed binary number, in units of 0.5 dB.

PACKET_ZONE_ID - Packet data services zone identifier.

If the base station supports a packet data service zone, the base station shall set this field to its non-zero packet data services zone identifier.

If the base station does not support a packet data service zone, the base station shall set this field to '00000000'.

MAX_NUM_ALT_SO - Maximum number of alternative service options.

The base station shall set this field to the maximum number of alternative service option numbers that the mobile station is allowed to include in the *Origination Message* or the *Page Response Message*.

For mobile stations with $MOB\_P\_REV_S$ less than seven, the alternative service options are those service options defined in [30] and related to SERVICE_OPTION in *Origination Message* and the *Page Response Message*.

For mobile stations with $MOB\_P\_REV_S$ equal to or greater than seven, the alternative service options are those service options defined in [30] without service option group number assigned and related to SERVICE_OPTION in *Origination Message* and the *Page Response Message*.

If the base station sets this field to a value greater than zero, in addition, the base station shall allow the mobile station with MOB_P_REV equal to or greater than seven to include

- a 4 or 8-bit service option bitmap in the *Origination Message* and the *Page Response Message*;
- alternate service option numbers, not limited to MAX_ALT_SO_NUM, in the *Enhanced Origination Message*.

RESELECT_INCLUDED - System reselection parameters included.

If the base station is including system reselection parameters, the base station shall set this field to '1'; otherwise, the base station shall set this field to '0'.

EC_THRESH - Pilot power threshold.

If RESELECT_INCLUDED is set to '1', the base station shall include the field EC_THRESH and set this field to:

$$\lceil (pilot\_power\_threshold + 115) \rceil$$

where *pilot_power_threshold* is the pilot power, E_c, in dBm/1.23 MHz, below which the mobile station is to perform system reselection; otherwise, the base station shall omit this field.

EC_I0_THRESH - Pilot E_c / I_o threshold.

If RESELECT_INCLUDED is set to '1', the base station shall include the field EC_I0_THRESH and set this field to:

$$\lfloor -20 \times \log_{10} (pilot\_threshold) \rfloor$$

where *pilot_threshold* is the pilot E_c/I_0 below which the mobile station is to perform system reselection; otherwise, the base station shall omit this field.

PILOT_REPORT - Pilot reporting indicator.

The base station shall set this field to '1' if the mobile station is to report the additional pilots which have pilot strengths exceeding T_ADD in all Access Channel messages. The base station shall set this field to '0' if the mobile station is to report the additional pilots which have pilot strengths exceeding T_ADD only in the *Origination Message*, the *Reconnect Message*, and the *Page Response Message*.

NGHBR_SET_ENTRY_INFO - Neighbor Set access entry handoff information included indicator.

If the base station is including information on the Neighbor Set access entry handoff, the base station shall set this field to '1'; otherwise, the base station shall set this field to '0'.

ACC_ENT_HO_ORDER - Access entry handoff permitted indicator.

If NGHBR_SET_ENTRY_INFO is set to '1', the base station shall include this field and set it as described below; otherwise, the base station shall omit this field.

The base station shall set this field to '1' if the mobile station is permitted to perform an access entry handoff after receiving a message while performing the *Mobile Station Order and Message Processing Operation* in the *Mobile Station Idle State* (see 2.6.2.4); otherwise, the base station shall set this field to '0'.

NGHBR_SET_ACCESS_INFO - Neighbor Set access handoff included indicator.

If the base station is including information on the Neighbor Set access handoff or access probe handoff, the base station shall set this field to '1', otherwise, the base station shall set this field to '0'.

ACCESS_HO - Access handoff permitted indicator.

If NGHBR_SET_ACCESS_INFO is set to '1', the base station shall include this field and set it as described below; otherwise, the base station shall omit this field.

The base station shall set this field to '1' if the mobile station is permitted to perform an access handoff (see 2.6.3.1.3.2); otherwise, the base station shall set this field to '0'.

ACCESS_HO_MSG_RSP - Access handoff permitted for message response indicator.

If ACCESS_HO is set to '1', the base station shall include this field and set it as described below; otherwise, the base station shall omit this field.

The base station shall set this field to '1' if the mobile station is permitted to perform an access handoff after receiving a message and before responding to that message in the *System Access State*; otherwise, the base station shall set this field to '0'.

ACCESS_PROBE_HO - Access probe handoff permitted indicator.

If NGHBR_SET_ACCESS_INFO is set to '1', the base station shall include this field and set it as described below; otherwise, the base station shall omit this field.

The base station shall set this field to '1' if the mobile station is permitted to perform an access probe handoff (see 2.6.3.1.3.3); otherwise, the base station shall set this field to '0'.

ACC_HO_LIST_UPD - Access handoff list update permitted indicator.

If ACCESS_PROBE_HO is included and is set to '1', the base station shall include this field and set it as described below; otherwise, the base station shall omit this field.

The base station shall set this field to '1' if the mobile station is permitted to update the access handoff list during an access attempt (see 2.6.3.1.7.2); otherwise, the base station shall set this field to '0'.

ACC_PROBE_HO_OTHER_MSG - Access probe handoff permitted for messages other than the *Origination Message*, the *Reconnect Message*, and the *Page Response Message*.

If ACCESS_PROBE_HO is set to '1', the base station shall include this field and set it as described below; otherwise, the base station shall omit this field.

The base station shall set this field to '1' if the mobile station is permitted to perform an access probe handoff for messages other than the *Origination Message*, the *Reconnect Message*, and the *Page Response Message*. The base station shall set this field to '0' if the mobile station is permitted to perform an access probe handoff only for the *Origination Message*, the *Reconnect Message*, and the *Page Response Message*. See 2.6.3.1.3.3.

MAX_NUM_PROBE_HO - Maximum number of times that the mobile station is permitted to perform an access probe handoff.

If ACCESS_PROBE_HO is set to '1', the base station shall include this field and set it as described below; otherwise, the base station shall omit this field.

The base station shall set this field to the maximum number of times the mobile station is allowed to perform an access probe handoff within an access attempt minus one.

NGHBR_SET_SIZE - Size of the Neighbor Set.

If NGHBR_SET_ENTRY_INFO or NGHBR_SET_ACCESS_INFO is equal to '1', the base station shall set this field to the number of pilots included in the *Neighbor List Message*, *Extended Neighbor List Message*, or *General Neighbor List Message;* otherwise, the base station shall omit this field.

If NGHBR_SET_ENTRY_INFO is equal to '1', the base station shall include NGHBR_SET_SIZE occurrences of the following field:

ACCESS_ENTRY_HO - Access entry handoff permitted when entering the System Access State.

The base station shall set this field to '1' if the mobile station is permitted to perform an access entry handoff to the base station associated with the corresponding pilot between the time it receives a message on the Paging Channel when in the *Mobile Station Idle State* and it enters the *System Access State* to respond to the message; otherwise, the base station shall set this field to '0'. The base station shall use the same order for the ACCESS_ENTRY_HO fields in this message as is used for pilots which are listed in the *Neighbor List Message*, *Extended Neighbor List Message*, or *General Neighbor List Message*. Specifically, the ith occurrence of the ACCESS_ENTRY_HO field shall correspond the ith pilot in the *Neighbor List Message*, *Extended Neighbor List Message*, or *General Neighbor List Message*.

If NGHBR_SET_ACCESS_INFO is equal to '1', the base station shall include NGHBR_SET_SIZE occurrences of the following field:

ACCESS_HO_ALLOWED - Access handoff and access probe handoff permitted for the corresponding pilot while in the *System Access State*.

The base station shall set this field to '1' if the mobile station is permitted to perform an access handoff or access probe handoff to the base station associated with the corresponding pilot when the mobile station is in the *System Access State* (see 2.6.3.1.8 and 2.6.3.1.9); otherwise, the base station shall set this field to '0'. The base station shall use the same order for the ACCESS_HO_ALLOWED fields in this message as is used for pilots which are listed in the *Neighbor List Message*, *Extended Neighbor List Message*, or *General Neighbor List Message*. Specifically, the ith occurrence of the ACCESS_HO_ALLOWED field shall correspond the ith pilot in the *Neighbor List Message*, *Extended Neighbor List Message*, or *General Neighbor List Message*.

The base station shall set this field to '0' if this pilot does not support a Reverse Access Channel (R-ACH).

BROADCAST_GPS_ASST - Broadcast GPS Assist Indicator.

The base station shall set this field to '1' if it supports Broadcast GPS Assist capability; otherwise, the base station shall set this field to '0'.

QPCH_SUPPORTED - Quick Paging Channel Supported Indication.

If the base station supports Quick Paging Channel operation, the base station shall set this field to '1'; otherwise the base station shall set this field to '0'.

NUM_QPCH - Number of Quick Paging Channels.

If the base station sets QPCH_SUPPORTED to '1', the base station shall include this field and set it as described below; otherwise, the base station shall omit this field.

The base station shall set this field to the number of Quick Paging Channels on this CDMA Channel. The base station shall not set this field to '00'.

QPCH_RATE - Quick Paging Channel indicator rate.

If the base station sets QPCH_SUPPORTED to '1', the base station shall include this field and set it as described below; otherwise, the base station shall omit this field.

The base station shall set this field to the QPCH_RATE field value shown in Table 3.7.2.3.2.13-2 corresponding to the indicator rate used by the Quick Paging Channel in the system.

Table 3.7.2.3.2.13-2. QPCH Indicator Data Rate

QPCH_RATE Field (binary)	QPCH indicator data rate
0	4800 bps
1	9600 bps

QPCH_POWER_LEVEL_PAGE - Quick Paging Channel paging indicator transmit power level.

If the base station sets QPCH_SUPPORTED to '1', the base station shall include this field and set it as described below; otherwise, the base station shall omit this field.

The base station shall set this field to the Quick Paging Channel paging indicator transmit power level relative to that of the Pilot Channel as specified in Table 3.7.2.3.2.13-3.

Table 3.7.2.3.2.13-3 Quick Paging Channel Transmit Power Level

QPCH_POWER_LEVEL_PAGE QPCH_POWER_LEVEL_CONFIG (binary)	Transmit Power Level
000	5 dB below the Pilot Channel Transmit Power
001	4 dB below the Pilot Channel Transmit Power
010	3 dB below the Pilot Channel Transmit Power
011	2 dB below the Pilot Channel Transmit Power
100	1 dB below the Pilot Channel Transmit Power
101	Same as the Pilot Channel Transmit Power
110	1 dB above the Pilot Channel Transmit Power
111	2 dB above the Pilot Channel Transmit Power

QPCH_CCI_SUPPORTED - Quick Paging Channel configuration change indicator supported.

If QPCH_SUPPORTED is set to '1', the base station shall include this field and set it as described below; otherwise, the base station shall omit this field.

If the base station supports configuration change indicators on the Quick Paging Channel, the base station shall set this field to '1'; otherwise the base station shall set this field to '0'.

QPCH_POWER_LEVEL_CONFIG - Quick Paging Channel configuration change indicator transmit power level.

If the base station includes the QPCH_CCI_SUPPORTED field and sets it to '1', the base station shall include this field and set it as described below; otherwise, the base station shall omit this field.

The base station shall set this field to the Quick Paging Channel configuration change indicator transmit power level relative to that of the Pilot Channel as specified in Table 3.7.2.3.2.13-3.

SDB_SUPPORTED - Short Data Burst supported indicator.

The base station shall set this field to '1' if the mobile station is permitted to send a Short Data Burst; otherwise, the base station shall set this field to '0'.

RLGAIN_TRAFFIC_PILOT - Gain adjustment of the Reverse Traffic Channel relative to the Reverse Pilot Channel for Radio Configurations greater than 2.

The base station shall set this field to the correction factor to be used by mobile stations in setting the power of a reverse traffic channel, expressed as a two's complement value in units of 0.125 dB (see [2]).

REV_PWR_CNTL_DELAY_INCL - Reverse Power Control Delay included indicator.

The base station shall set this field to '1' if the base station includes the REV_PWR_CNTL_DELAY field in this message; otherwise, the base station shall set this field to '0'.

REV_PWR_CNTL_DELAY - The reverse power control delay.

If REV_PWR_CNTL_DELAY_INCL is set to '0', the base station shall omit this field; otherwise, the base station shall include this field and set it as follows:

The base station shall set this field to the closed-loop reverse power control delay minus one (the closed-loop reverse power control delay is the time between the end of a gated-on reverse PCG and the beginning of the reverse PCG where the corresponding feedback is sent on the Forward Power Control Subchannel, see [2]), in units of 1.25 ms.

AUTO_MSG_SUPPORTED - Autonomous message supported indicator.

If the base station allows the autonomous delivery of the *Device Information Message* on the r-csch, the base station shall set this field to '1'; otherwise, the base station shall set this field to '0'.

AUTO_MSG-_INTERVAL - Autonomous message interval.

If AUTO_MSG_SUPPORTED is set to '0', the base station shall omit this field; otherwise, the base station shall include this field and shall set this field to the AUTO_MSG_INTERVAL value shown in Table 3.7.2.3.2.13-4 to indicate the minimum time interval between autonomous messages sent by a mobile station to the infrastructure. This parameter is intended to allow the infrastructure to limit the frequency of autonomous messages sent by a mobile station on the r-csch.

Table 3.7.2.3.2.13-4. AUTO_MSG_INTERVAL Values

AUTO_MSG_INTERVAL (binary)	Interval Length (milliseconds)
000	200
001	500
010	1000
011	1500
100	2000
101	5000
110	10000
111	15000

MOB_QOS - Indicator granting permission to the mobile station to request QoS parameter settings in the *Origination Message*, *Origination Continuation Message*, or *Enhanced Origination Message*.

The base station shall set this field to '1', if the mobile station is allowed to include a QoS record in the *Origination Message*, *Origination Continuation Message*, or *Enhanced Origination Message*; otherwise, the base station shall set this field to '0'.

ENC_SUPPORTED – Encryption fields included.

The base station shall set this field to '1' if the encryption related fields are included; otherwise the base station shall set this field to '0'.

SIG_ENCRYPT_SUP – Signaling encryption supported indicator.

If ENC_SUPPORTED is equal to '1', the base station shall include this field; otherwise, the base station shall omit this field. If this field is included, this field indicates which signaling encryption algorithms are supported by the base station.

This field consists of the subfields shown in Table 2.7.1.3.2.1-5.

If this field is included, the base station shall set the subfields as follows:

The base station shall set the CMEA subfield to '1'.

The base station shall set each other subfield to '1' if the corresponding signaling encryption algorithm is supported by the base station; otherwise, the base station shall set the subfield to '0'.

The base station shall set the RESERVED subfield to '00000'.

UI_ENCRYPT_SUP – User information encryption supported indicator.

If ENC_SUPPORTED is equal to '1', the base station shall include this field; otherwise, the base station shall omit this field. If this field is included, the base station shall set this field to indicate the supported user information encryption algorithms.

This field consists of the subfields shown in Table 2.7.1.3.2.4-9.

The base station shall set each subfield to '1' if the corresponding user information encryption algorithm is supported by the base station; otherwise, the base station shall set the subfield to '0'.

USE_SYNC_ID - Sync ID supported indicator.

The base station shall set this field to '1' to indicate that the mobile station is permitted to include the SYNC_ID field in the *Page Response Message*, the *Reconnect Message*, the *Origination Message*, and the *Enhanced Origination Message*; otherwise, the base station shall set this field to '0'.

CS_SUPPORTED - Concurrent Services supported indicator.

If the base station supports concurrent services, the base station shall set this field to '1'; otherwise, the base station shall set this field to '0'.

BCCH_SUPPORTED - Primary Broadcast Control Channel Supported Indicator.

If the base station supports Primary Broadcast Control

Channel, the base station shall set this field to '1'; otherwise, the base station shall set this field to '0'.

MS_INIT_POS_LOC_SUP_IND - Mobile station initiated position location determination supported indicator.

If the base station supports mobile station initiated position determination, the base station shall set this field to '1'; otherwise, the base station shall set this field to '0'.

PILOT_INFO_REQ_SUPPORTED - Pilot information request supported indicator.

If the base station supports mobile station request for pilot information using the "Pilot Information" record in the *Base Station Status Request Message*, the base station shall set this field to '1'; otherwise, the base station shall set this field to '0'.

QPCH_BI_SUPPORTED – Quick Paging Channel broadcast indicator supported.

If QPCH_SUPPORTED is included and set to '1', the base station shall include this field and set it as described below; otherwise, the base station shall omit this field.

If the base station supports broadcast indicators on the Quick Paging Channel, the base station shall set this field to '1'; otherwise the base station shall set this field to '0'.

QPCH_POWER_LEVEL_BCAST – Quick Paging Channel broadcast indicator transmit power level.

If QPCH_BI_SUPPORTED is included and set to '1', the base station shall include this field and set it as described below; otherwise, the base station shall omit this field.

The base station shall set this field to the Quick Paging Channel broadcast indicator transmit power level relative to that of the Pilot Channel as specified in Table 3.7.2.3.2.31-3.

BAND_CLASS_INFO_REQ – Band class information request indicator.

The base station shall set this field to '1' if the ALT_BAND_CLASS field is included in this message; otherwise, the base station shall set this field to '0'.

ALT_BAND_CLASS – Alternate band class.

If BAND_CLASS_INFO_REQ is set to '0', then the base station shall omit this field; otherwise, the base station shall include this field and set it as follows:

The base station shall set this field to an alternate CDMA band class (see [30]) supported by the base station. The mobile station is to indicate its capability to support the alternate band class in the *Origination Message* and *Page Response Message*.

CDMA_OFF_TIME_REP_SUP_IND – CDMA off time report supported indicator.

If the base station supports mobile station report for CDMA off time information using the *CDMA Off Time Report Message*, the base station shall set this field to '1'; otherwise, the base station shall set this field to '0'.

CDMA_OFF_TIME_REP_THRESHOLD_UNIT – CDMA off time report threshold unit

If CDMA_OFF_TIME_REP_SUP_IND is set to '0', the base station shall omit this field; otherwise, the base station shall include this field and set it as follows:

The base station shall set this field to the time unit used in CDMA_OFF_TIME_REP_THRESHOLD, as specified in Table 3.7.2.3.2.13-5

Table 3.7.2.3.2.13-5. CDMA Off Time Report Threshold Unit

CDMA_OFF_TIME_REP_UNIT (binary)	Time Unit (decimal)
0	80 ms
1	0.5 sec

CDMA_OFF_TIME_REP_THRESHOLD – CDMA off time report threshold

If CDMA_OFF_TIME_REP_SUP_IND is set to '0', the base station shall omit this field; otherwise, the base station shall include this field and set it as follows:

The base station shall set this field to the time in units of CDMA_OFF_TIME_REP_THRESHOLD_UNIT such that if the mobile station goes away from the CDMA traffic channel longer than this value, the mobile station is to send a *CDMA Off Time Report Message*.

CHM_SUPPORTED – Control Hold Mode supported indicator.

The base station shall set this field to '1' to indicate that the base station supports the Control Hold Mode; otherwise, the base station shall set this field to '0'.

RELEASE_TO_IDLE_IND - Release to Idle State allowed indicator.

If the mobile station is allowed to return to the *Mobile Station Idle State* upon call release, the base station shall set this field to '1'; otherwise, the base station shall set this field to '0'.

RECONNECT_MSG_IND - *Reconnect Message* supported indicator.

The base station shall set this field to '0' if the mobile station is not allowed to send a *Reconnect Message* instead of an *Origination Message* or a *Page Response Message*; otherwise, the base station shall set this field to '1'.

MSG_INTEGRITY_SUP - Message integrity supported indicator.

If the base station supports message integrity, the base station shall set this field to ‘1’; otherwise, the base station shall set this field to ‘0’.

SIG_INTEGRITY_SUP_INCL - Signaling message integrity information included indicator.

If MSG_INTEGRITY_SUP is set to ‘1’, the base station shall include this field and set it as follows; otherwise, the base station shall omit this field.

If the base station supports other integrity algorithm(s) in addition to the default integrity algorithm, the base station shall set this field to ‘1’; otherwise, the base station shall set this field to ‘0’.

SIG_INTEGRITY_SUP - Signaling integrity algorithm supported by the base station.

If SIG_INTEGRITY_SUP_INCL is included and set to ‘1’, the base station shall set this field as follows; otherwise, the base station shall omit this field.

The base station shall set this field to indicate the supported message integrity algorithms in addition to the default integrity algorithm.

This field consists of the subfields shown in Table 2.7.1.3.2.1-6.

The base station shall set each subfield to ‘1’ if the corresponding message integrity algorithm is supported by the base station; otherwise, the base station shall set the subfield to ‘0’.

The base station shall set the RESERVED subfield to ‘00000000’.

FOR_PDCH_SUPPORTED - Forward Packet Data Channel supported indicator.

If the base station supports the Forward Packet Data Channel (F-PDCH), the base station shall set this field to ‘1’; otherwise, the base station shall set this field to ‘0’.

PDCH_CHM_SUPPORTED - PDCH Control Hold Mode supported indicator.

If FOR_PDCH_SUPPORTED is set to ‘0’, the base station shall omit this field; otherwise, the base station shall include this field and set it as follows:

The base station shall set this field to ‘1’ to indicate that the base station supports the PDCH Control Hold Mode; otherwise, the base station shall set this field to ‘0’.

PDCH_PARMS_INCL - Forward Packet Data Channel related parameters included indicator.

If FOR_PDCH_SUPPORTED is set to ‘0’, the base station shall omit this field; otherwise, the base station shall set this field as follows:

The base station shall set this field to '1' if the following F-PDCH related fields are included in this message; otherwise, the base station shall set this field to '0'.

FOR_PDCH_RLGAIN_INCL - Forward Packet Data Channel parameters related to reverse link adjustment gains included indicator.

If PDCH_PARMS_INCL is omitted, or if it is included and set to '0', the base station shall omit this field; otherwise, the base station shall include this field, and set it as follows.

The base station shall set this field to '1' if the following F-PDCH gain related fields are included in this message; otherwise, the base station shall set this field to '0'.

RLGAIN_ACKCH_PILOT - Reverse Acknowledgment Channel to pilot adjustment gain.

If FOR_PDCH_RLGAIN_INCL is omitted, or if it is included and set to '0', the base station shall omit this field; otherwise, the base station shall include this field, and set it as follows.

The base station shall set this field to the Reverse Acknowledgment Channel to pilot adjustment gain expressed as a two's complement value in units of 0.125 dB (see [2]).

RLGAIN_CQICH_PILOT - Reverse Channel Quality Indicator Channel to pilot adjustment gain.

If FOR_PDCH_RLGAIN_INCL is omitted, or if it is included and set to '0', the base station shall omit this field; otherwise, the base station shall include this field, and set it as follows.

The base station shall set this field to the Reverse Channel Quality Indicator Channel to pilot adjustment gain expressed as a two's complement value in units of 0.125 dB (see [2]).

NUM_SOFT_SWITCHING_FRAMES - Number of frames for R-CQICH soft switching.

If PDCH_PARMS_INCL is not included, or is included and set to '0', the base station shall omit this field; otherwise, the base station shall include this field and set it as follows:

The base station shall set this field to the duration of the cell switching period, in units of 20 ms, minus one, during which the mobile station is to transmit the cell switch sequence on the R-CQICH when it switches between two pilots which are in different groups (see [3]).

NUM_SOFTER_SWITCHING_FRAMES - Number of frames for R-CQICH softer switching.

If PDCH_PARMS_INCL is not included, or is included and set to '0', the base station shall omit this field; otherwise, the base station shall include this field and set it as follows:

The base station shall set this field to the duration of the cell switching period, in units of 20 ms, minus one, during which the mobile station is to transmit the cell switch sequence on the R-CQICH when it switches between two pilots which are in the same group (see [3]).

NUM_SOFT_SWITCHING_SLOTS - Number of slots per frame for R-CQICH soft switching.

If PDCH_PARMS_INCL is not included, or is included and set to '0', the base station shall omit this field; otherwise, the base station shall include this field and set it as follows:

The base station shall set this field to the duration of the cell switching slots within a switching frame, in units of 1.25 ms as specified in Table 3.7.2.3.2.21-10, during which the mobile station is to transmit the cell switch indication by using Walsh cover of target on the R-CQICH when it switches between two pilots which are in different groups.

NUM_SOFTER_SWITCHING_SLOTS - Number of slots per frame for R-CQICH softer switching.

If PDCH_PARMS_INCL is not included, or is included and set to '0', the base station shall omit this field; otherwise, the base station shall include this field and set it as follows:

The base station shall set this field to the duration of the cell switching slots within a switching frame, in units of 1.25 ms as specified in Table 3.7.2.3.2.21-10, during which the mobile station is to transmit the cell switch indication by using Walsh cover of target on the R-CQICH when it switches between two pilots which are in the same group.

PDCH_SOFT_SWITCHING_DELAY - F-PDCH soft switching delay.

If PDCH_PARMS_INCL is not included, or is included and set to '0', the base station shall omit this field; otherwise, the base station shall include this field and set it as follows:

The base station shall set this field to the minimum interruption seen by the mobile station, in units of 10 ms, minus one, when the mobile station is to transmit the cell switch sequence on the R-CQICH channel when it switches between two pilots which are in different groups (see [3]).

PDCH_SOFTER_SWITCHING_DELAY - F-PDCH softer switching delay.

If PDCH_PARMS_INCL is not included, or is included and set to '0', the base station shall omit this field; otherwise, the base station shall include this field and set it as follows:

The base station shall set this field to the minimum interruption seen by the mobile station, in units of 10 ms, minus one, when the mobile station is to transmit the cell switch sequence on the R-CQICH channel when it switches between two pilots which are in the same group (see [3]).

WALSH_TABLE_ID - The index of the Walsh Table used.

If PDCH_PARMS_INCL is not included, or is included and set to '0', the base station shall omit this field; otherwise, the base station shall set this field as follows:

The base station shall set this field to the index of the Walsh Table being used by the Packet Data Channel. (See [3]).

NUM_PDCCH - The number of Packet Data Control Channels supported.

If PDCH_PARMS_INCL is not included, or is included and set to '0', the base station shall omit this field; otherwise, the base station shall include this field and set it as follows:

The base station shall set this field to '000' if the pilot supports one Packet Data Control Channel. The base station shall set this field to '001' if the pilot supports two Packet Data Control Channels. The base station shall not set this field to any other value.

The base station shall include *NUM_PDCCH+1* occurrences of the field FOR_PDCCH_WALSH:

FOR_PDCCH_WALSH - Forward Packet Data Control Channel Walsh code assignment.

If PDCH_PARMS_INCL is not included, or is included and set to '0', the base station shall omit this field; otherwise, the base station shall include this field and set it as follows:

The base station shall set this field to the Walsh code assignment for the Forward Packet Data Control Channel.

If NUM_PDCCH is set to '001', the Walsh code of PDCCH0 shall be included first, followed by the Walsh code for PDCCH1.

IMSI_10_INCL - IMSI_10 included.

If the MNC is a 3-digit number and the base station wants to convey the third digit of the MNC to the mobile station, the base station shall set this field to '1'; otherwise, the base station shall set this field to '0'.

IMSI_10 - The least significant digit of MNC when the MNC is a 3-digit number.

If IMSI_10_INCL is set to '0', the base station shall omit this field; otherwise, the base station shall set this field to the least significant digit of MNC converted to binary by the standard decimal-to-binary conversion as shown in Table 2.3.1.1-1.

MAX_ADD_SERV_INSTANCE - Maximum number of additional service reference identifiers allowed in origination

If the CS_SUPPORTED field is set to '0', the base station shall omit this field; otherwise, the base station shall include this field and set it as follows:

The base station shall set this field to the maximum number of additional service reference identifiers that can be included in the *Origination Message* or *Enhanced Origination Message*.

RER_MODE_SUPPORTED - Radio environment reporting mode supported indicator.

If the base station supports radio environment reporting mode, the base station shall set this field to '1'; otherwise, the base station shall set this field to '0'.

TKZ_MODE_SUPPORTED - Tracking zone mode supported indicator.

The base station shall set this field to '1' if the tracking zone mode is supported; otherwise, the base station shall set this field to '0'.

TKZ_ID - Tracking zone identifier.

If TKZ_MODE_SUPPORTED is set to '1', the base station shall set this field to its tracking zone identifier; otherwise, the base station shall omit this field.

PZ_HYST_ENABLED - Packet zone hysteresis enabled.

If the PACKET_ZONE_ID field is set to '00000000', the base station shall omit this field; otherwise, the base station shall include this field and set it as follows:

If the packet zone hysteresis feature is to be enabled at the mobile station, the base station shall set this field to '1'; otherwise, the base station shall set this field to '0'.

PZ_HYST_INFO_INCL - Packet zone hysteresis information included indicator.

If the PZ_HYST_ENABLED field is included and is set to '1', the base station shall include this field and set it as follows; otherwise, the base station shall omit this field.

If the base includes the PZ_HYST_LIST_LEN, PZ_HYST_ACT_TIMER and PZ_HYST_TIMER fields, the base station shall set this field to '1'; otherwise, the base station shall set this field to '0'.

PZ_HYST_LIST_LEN - Packet zone hysteresis list length.

If the PZ_HYST_INFO_INCL field is included and is set to '1', the base station shall include this field and set it as follows; otherwise, the base station shall omit this field.

The base station shall set this field to the length of the packet zone hysteresis list. This field shall be within the range '0001' through '1111', inclusive.

PZ_HYST_ACT_TIMER - Packet zone hysteresis activation timer.

If the PZ_HYST_INFO_INCL field is included and is set to '1', the base station shall include this field and set it as follows; otherwise, the base station shall omit this field.

The base station shall set to the value of the packet zone hysteresis activation timer (in units of seconds). This field shall be within the range '00000001' through '11111111', inclusive.

PZ_HYST_TIMER_MUL - Packet zone hysteresis timer multiplier.

If the PZ_HYST_INFO_INCL field is included and is set to '1', the base station shall include this field and set it as follows; otherwise, the base station shall omit this field.

The base station shall set the field to x, where x × 8^y seconds is the value of the hysteresis timer and y is the value indicated in the PZ_HYST_TIMER_EXP field. The base station shall set this field to a value that is between 1 and 7 inclusive. The value 0 is reserved.

PZ_HYST_TIMER_EXP - Packet zone hysteresis timer exponent.

If the PZ_HYST_INFO_INCL field is included and is set to '1', the base station shall include this field and set it as follows; otherwise, the base station shall omit this field.

The base station shall set the field to y, where x × 8^y seconds is the value of the hysteresis timer and x is the value indicated in the PZ_HYST_TIMER_MUL field. The base station shall set this field to a value that is between 0 and 4 inclusive. All the other values are reserved.

EXT_PREF_MSID_TYPE - Extended Preferred Access Channel Mobile Station Identifier Type.

The base station shall set this field to the value shown in Table 3.7.2.3.2.13-1 and Table 3.7.2.3.2.13-1a corresponding to the type of MSID that the mobile station is to use on the Access Channel.

MEID_REQD - MEID Required Indicator.

If EXT_PREF_MSID_TYPE is set to '11' and PREF_MSID_TYPE is set to either '00' or '11', the base station shall omit this field; otherwise, the base station shall include this field and set it as follows:

The base station shall set this field to '1' to indicate that network requires MEID (of mobile stations having R-UIM) in registrations; otherwise the base station shall set this field to '0'.

AUTO_FCSO_ALLOWED - Autonomous *Fast Call Setup Order* allowed indicator.

The base station shall set this field to '1' if the mobile station is allowed to send an autonomous *Fast Call Setup Order*; otherwise, the base station shall set this field to '0'.

REV_PDCH_SUPPORTED - Reverse Packet Data Channel supported indicator.

If FOR_PDCH_SUPPORTED is set to '0', the base station shall omit this field; otherwise, the base station shall include this field and set it as follows:

If the base station supports the Reverse Packet Data Channel (R-PDCH), the base station shall set this field to '1'; otherwise, the base station shall set this field to '0'.

REV_PDCH_PARMS_INCL - Reverse Packet Data Channel related parameters included indicator.

If REV_PDCH_SUPPORTED is omitted, or if it is included and set to '0', the base station shall omit this field; otherwise, the base station shall include this field and set it as follows:

The base station shall set this field to '1' if the R-PDCH parameters are included in this message; otherwise, the base station shall set this field to '0'.

REV_PDCH_RLGAIN_INCL - Reverse Packet Data Channel parameters related to reverse link adjustment gains included indicator.

If REV_PDCH_PARMS_INCL is omitted, or if it is included and set to '0', the base station shall omit this field; otherwise, the base station shall include this field, and set it as follows.

The base station shall set this field to '1' if the following R-PDCH gain related fields are included in this message; otherwise, the base station shall set this field to '0'.

RLGAIN_SPICH_PILOT - Reverse Secondary Pilot Channel to pilot adjustment gain.

If REV_PDCH_RLGAIN_INCL is omitted, or if it is included and set to '0', the base station shall omit this field; otherwise, the base station shall include this field, and set it as follows.

The base station shall set this field to the Reverse Secondary Pilot Channel to pilot adjustment gain expressed as a two's complement value in units of 0.125 dB (see [2]).

RLGAIN_REQCH_PILOT - Reverse Request Channel to pilot adjustment gain.

If REV_PDCH_RLGAIN_INCL is omitted, or if it is included and set to '0', the base station shall omit this field; otherwise, the base station shall include this field, and set it as follows.

The base station shall set this field to the Reverse Request Channel to pilot adjustment gain expressed as a two's complement value in units of 0.125 dB (see [2]).

RLGAIN_PDCCH_PILOT - Reverse Packet Data Control Channel to pilot adjustment gain.

If REV_PDCH_RLGAIN_INCL is omitted, or if it is included and set to '0', the base station shall omit this field; otherwise, the base station shall include this field, and set it as follows.

The base station shall set this field to the Reverse Packet Data Channel to pilot adjustment gain expressed as a two's complement value in units of 0.125 dB (see [2]).

REV_PDCH_PARMS_1_INCL - Reverse Packet Data Channel parameters subset included indicator.

If REV_PDCH_PARMS_INCL is omitted, or if it is included and set to '0', the base station shall omit this field; otherwise, the base station shall include this field, and set it as follows.

The base station shall set this field to '1' if the following R-PDCH parameters are included in this message; otherwise, the base station shall set this field to '0'.

REV_PDCH_TABLE_SEL - Reverse Packet Data Channel Table selector.

If REV_PDCH_PARMS_1_INCL is omitted, or if it is included and set to '0', the base station shall omit this field; otherwise, the base station shall include this field, and set it as follows.

The base station shall set this field to the Reverse Packet Data Channel Table selector (see [2]).

REV_PDCH_MAX_AUTO_TPR - Reverse Packet Data Channel maximum traffic to pilot ratio for autonomous transmission.

If REV_PDCH_PARMS_1_INCL is omitted, or if it is included and set to ‘0’, the base station shall omit this field; otherwise, the base station shall include this field and set it as follows.

The base station shall set this field to the maximum traffic to pilot ratio for autonomous transmission on the Reverse Packet Data Channel (see [2] and [3]).

The base station shall set this field to a value in the range 0 to 18 dB inclusive in units of 0.125 dB.

REV_PDCH_NUM_ARQ_ROUNDS_NORMAL - Maximum number of allowed ARQ rounds on the Reverse PDCH in the non-boosted mode.

If REV_PDCH_PARMS_1_INCL is omitted, or if it is included and set to ‘0’, the base station shall omit this field; otherwise, the base station shall include this field and set it as follows:

The base station shall set this field to one less the maximum number of allowed ARQ rounds on the Reverse PDCH in the non-boosted mode. The base station shall set this field to 0, 1, or 2 corresponding to 1, 2, or 3 rounds respectively (See [3]).

REV_PDCH_OPER_PARMS_INCL- Reverse Packet Data Channel operational parameters included indicator.

If REV_PDCH_PARMS_INCL is omitted, or if it is included and set to ‘0’, the base station shall omit this field; otherwise, the base station shall include this field, and set it as follows.

The base station shall set this field to ‘1’ if the following R-PDCH operational parameters are included in this message; otherwise, the base station shall set this field to ‘0’.

REV_PDCH_MAX_SIZE_ALLOWED_ENCODER_PACKET - Maximum Allowed Reverse PDCH encoder packet size.

If REV_PDCH_OPER_PARMS_INCL is omitted, or if it is included and set to ‘0’, the base station shall omit this field; otherwise, the base station shall include this field and set it as follows.

The base station shall set this field to the maximum size encoder packet that the mobile station is allowed to use. (see [2] and [3]).

The base station shall set this field to a value in the range 0 to 10 inclusive, corresponding to the encoder packet sizes 192, 408, 792, 1560, 3096, 4632, 6168, 9240, 12312, 15384, and 18456 bits respectively.

REV_PDCH_DEFAULT_PERSISTENCE - Reverse Packet Data Channel default initial persistence.

If REV_PDCH_OPER_PARMS_INCL is omitted, or if it is included and set to ‘0’, the base station shall omit this field; otherwise, the base station shall include this field and set it as follows:

The base station shall set this field to ‘1’ if the mobile station is to be persistent at the call setup; otherwise, the base station shall set this field to ‘0’ (See [3]).

REV_PDCH_RESET_PERSISTENCE - Reverse Packet Data Channel reset persistence indicator.

If REV_PDCH_OPER_PARMS_INCL is omitted, or if it is included and set to ‘0’, the base station shall omit this field; otherwise, the base station shall include this field and set it as follows:

The base station shall set this field to ‘1’ if, at the end of a persistent grant, the mobile station shall reset its persistent indicator to persistent; otherwise, the base station shall set this field to ‘0’ if the mobile station shall reset its persistent indicator to non-persistent (See [3]).

REV_PDCH_GRANT_PRECEDENCE - Reverse Packet Data Channel Grant Precedence Indicator.

If REV_PDCH_OPER_PARMS_INCL is omitted, or if it is included and set to ‘0’, the base station shall omit this field; otherwise, the base station shall include this field and set it as follows:

The base station shall set this field to ‘1’ if unicast Forward Grant Channel messages have precedence over Rate Control commands; otherwise, the base station shall set this field to ‘0’ to indicate that Rate Control down commands from non-serving sectors have precedence over Forward Grant Channel messages (see [3]).

REV_PDCH_MSIB_SUPPORTED - Reverse PDCH MSIB usage indicator.

If REV_PDCH_OPER_PARMS_INCL is omitted, or if it is included and set to ‘0’, the base station shall omit this field; otherwise, the base station shall include this field and set it as follows:

The base station shall set this field to ‘1’ if the mobile station is to use the MSIB bit on the Reverse Packet Data Control Channel; otherwise, the base station shall set this field to ‘0’ (see [3]).

REV_PDCH_SOFT_SWITCHING_RESET_IND - Reverse Packet Data Channel soft switching reset indicator.

If REV_PDCH_OPER_PARMS_INCL is omitted, or if it is included and set to ‘0’, the base station shall omit this field; otherwise, the base station shall include this field and set it as follows:

The base station shall set this field to '1' if the mobile station is to initialize RPDCHCF when soft selection occurs in the FPDCHCF; otherwise, the base station shall set this field to '0' (see [3]).

SDB_IN_RCNM_IND - Short Data Burst allowed in *Reconnect Message* indicator.

If RECONNECT_MSG_IND is set to '0' or SDB_SUPPORTED is set to '0', the base station shall omit this field; otherwise, the base station shall include this field and set it as follows:

The base station shall set this field to '1' if the mobile station is allowed to include a Short Data Burst (see [30]) in the *Reconnect Message*; otherwise, the base station shall set this field to '0'.

SENDING_BSPM - *BCMC Service Parameters Message* indicator.

If the base station is sending the *BCMC Service Parameters Message* on the Paging Channel, it shall set this field to '1'; otherwise, it shall set this field to '0'.

BSPM_PERIOD_INDEX - BSPM Transmission Periodicity Index.

If the SENDING_BSPM field is set to '0', the base station shall omit this field; otherwise, the base station shall include this field and set it as follows:

The base station shall set this field to the BSPM transmission periodicity index corresponding to the periodicity with which the BSPM with DIFF_BSPM equal to '0' is transmitted on the paging channel.

CAND_BAND_INFO_REQ - Candidate band class information request indicator

The base station shall set this field to '1' when requesting mobiles to report whether various candidate band class and band subclass (if applicable) combinations are supported; otherwise, the base station shall set this field to '0'.

The base station shall not include more than 16 band class-band subclass queries in this message.

NUM_CAND_BAND_CLASS - Number of candidate band classes

If CAND_BAND_INFO_REQ is set to '0', the base station shall omit this field; otherwise, the base station shall include this field and set it as follows:

The base station shall set this field to the number of candidate band classes included in the record minus one.

If CAND_BAND_INFO_REQ is set to '1', the base station shall include

NUM_CAND_BAND_CLASS + 1 occurrences of the following record:

CAND_BAND_CLASS - Candidate band class

The base station shall set this field (see [30]) to a band class for which the mobile is to report it's capabilities upon system access. It may be used in conjunction with the BAND_SUBCLASS_IND fields to specify band subclass(es) for which the mobile is to report it's capabilities upon system access.

SUBCLASS_INFO_INCL - Band subclass information included

The base station shall set this field to '0' when no band subclasses are associated with CAND_BAND_CLASS or if the base station requires only the band class capabilities of the mobile station. Otherwise, the base station shall set this field to '1'.

SUBCLASS_REC_LEN - Band subclass subrecord length

If SUBCLASS_INFO_INCL is set to '0', the base station shall omit this field; otherwise, the base station shall set this field as follows:

The base station shall set this field to the number of band subclass indicator fields included in the subrecord minus one. The number of subclass indicator fields included depends on the highest band subclass being queried for mobile support for the associated CAND_BAND_CLASS (i.e. if the highest band subclass being queried is K, then SUBCLASS_REC_LEN = K).

If the SUBCLASS_REC_LEN field is included, the base station shall include SUBCLASS_REC_LEN +1 occurrences of the following subrecord. The first field included corresponds to band subclass '0' and the Nth field included corresponds to band subclass 'N-1'.

BAND_SUBCLASS_IND - Band subclass indicator

The base station shall set this field to '1' if it requires the mobile to report whether it supports this band subclass for the associated CAND_BAND_CLASS; otherwise, the base station shall set this field to '0'.

The mobile station is to indicate its capability to support the candidate band class and band subclass (if applicable) combination in the *Registration Message*, *Origination Message*, and *Page Response Message*.

TX_PWR_LIMIT_INCL - Transmit Power Limit Inclusion for the current base station

If the transmit power limit field is included in this message, the base station shall set this field to '1'; otherwise, the base station shall set this field to '0'.

TX_PWR_LIMIT - Transmit Power Limit for the current base station

If TX_PWR_LIMIT_INCL is set to '0', the base station shall omit this field; otherwise, the base station shall include this field and set to as follows.

The base station shall set this field to thirty dB more than transmit power limit in dBm EIRP, in steps of 1 dB. This field can take the values 30 to 53 corresponding to maximum transmit power values 0 dBm to 23 dBm.

BYPASS_REG_IND - Indication to bypass the power up registration upon the change of bands, serving systems and frequency blocks.

The base station shall set this field to '00' if the mobile station is to perform a power up registration upon band, frequency block or serving system change.

The base station shall set this field to '01' if the mobile station is to bypass the power up registration requirement upon band, frequency block or serving system changes due to processing the *Extended CDMA Channel List Message*.

The base station shall set this field to '10' if the mobile station is to bypass the power up registration requirement upon band, frequency block or serving system change when the SID remains the same.

The base station shall set this field to '11' if the mobile station is to bypass the power up registration requirement upon band, frequency block or serving system change.

3.7.2.3.2.14 Extended Neighbor List Message

MSG_TAG: ENLM

Field	**Length (bits)**
PILOT_PN	9
CONFIG_MSG_SEQ	6
PILOT_INC	4

Zero or more occurrences of the following record:

{

NGHBR_CONFIG	3
NGHBR_PN	9
SEARCH_PRIORITY	2
FREQ_INCL	1
NGHBR_BAND	0 or 5
NGHBR_FREQ	0 or 11

}

PILOT_PN - Pilot PN sequence offset index.

The base station shall set this field to the pilot PN sequence offset for this base station, in units of 64 PN chips.

CONFIG_MSG_SEQ - Configuration message sequence number.

The base station shall set this field to CONFIG_SEQ (see 3.6.2.2).

PILOT_INC - Pilot PN sequence offset index increment.

A mobile station searches for Remaining Set pilots at pilot PN sequence index values that are multiples of this value.

The base station shall set this field to the pilot PN sequence increment, in units of 64 PN chips, that mobile stations are to use for searching the Remaining Set. The base station should set this field to the largest increment such that the pilot PN sequence offsets of all its neighbor base stations are integer multiples of that increment.

The base station shall set this field to a value in the range 1 to 15 inclusive.

The base station shall include one occurrence of the following record for each pilot that a mobile station is to place in its Neighbor Set.

NGHBR_CONFIG - Neighbor configuration.

The base station shall set this field to the value shown in Table 3.7.2.3.2.14-1 corresponding to the configuration of this neighbor.

Table 3.7.2.3.2.14-1. Neighbor Configuration Field

Value (binary)	Neighbor Configuration
000	The neighbor base station has the same number of frequencies having Paging Channels as the current base station. The neighbor base station has a CDMA frequency assignment corresponding to this CDMA frequency assignment with the same number of Paging Channels, and the neighbor CDMA frequency is given as follows: • If FREQ_INCL equals ‘0’ for this record, this corresponding CDMA frequency assignment is the current CDMA frequency assignment. • If FREQ_INCL equals ‘1’ for this record, this corresponding CDMA frequency assignment is given by NGHBR_BAND and NGHBR_FREQ. The position of the neighbor CDMA frequency assignment in the *CDMA Channel List Message* or the *Extended CDMA Channel List Message* transmitted by the neighbor base station is the same as the position of this current CDMA frequency assignment in the *CDMA Channel List Message* or the *Extended CDMA Channel List Message* transmitted by the current base station.

001	The neighbor base station has the same number of frequencies having Paging Channels as the current base station. The neighbor base station has a CDMA frequency assignment corresponding to this CDMA frequency assignment with a different number of Paging Channels, and the neighbor CDMA frequency is given as follows: • If FREQ_INCL equals '0' for this record, this corresponding CDMA frequency assignment is the current CDMA frequency assignment. • If FREQ_INCL equals '1' for this record, this corresponding CDMA frequency assignment is given by NGHBR_BAND and NGHBR_FREQ. The position of the neighbor CDMA frequency assignment in the *CDMA Channel List Message* or the *Extended CDMA Channel List Message* transmitted by the neighbor base station is the same as the position of this current CDMA frequency assignment in the *CDMA Channel List Message* or the *Extended CDMA Channel List Message* transmitted by the current base station. This corresponding neighbor CDMA frequency assignment does have a Primary Paging Channel.
010	The neighbor base station may have a different number of frequencies having Paging Channels as the current base station. The neighbor base station has a Primary Paging Channel on the following CDMA frequency: • If FREQ_INCL equals '0' for this record, the neighbor base station has a Primary Paging Channel on the first CDMA Channel listed in the *CDMA Channel List Message* or the *Extended CDMA Channel List Message* transmitted by the current base station. • If FREQ_INCL equals '1' for this record, the neighbor base station has a Primary Paging Channel on the CDMA frequency assignment given by NGHBR_BAND and NGHBR_FREQ.

011	The neighbor base station configuration is unknown but the neighbor base station has a Pilot Channel on the following frequency: • If FREQ_INCL equals '0' for this record, the neighbor CDMA frequency assignment is the same as the current CDMA frequency assignment and has a Pilot Channel. • If FREQ_INCL equals '1' for this record, the CDMA frequency assignment given by NGHBR_BAND and NGHBR_FREQ has a Pilot Channel.
100-111	Reserved.

NGHBR_PN - Neighbor pilot PN sequence offset index.

The base station shall set this field to the pilot PN sequence offset for this neighbor, in units of 64 PN chips.

SEARCH_PRIORITY - Pilot Channel search priority.

The base station shall set this field to the search priority for the Pilot Channel corresponding to NGHBR_PN. The base station shall set the search priority as shown in Table 3.7.2.3.2.14-2.

Table 3.7.2.3.2.14-2. Search Priority Field

Value (binary)	Search Priority
00	Low
01	Medium
10	High
11	Very high

FREQ_INCL - Frequency included indicator.

If the NGHBR_BAND and NGHBR_FREQ fields are included for this neighbor base station, the base station shall set this bit to '1'. If the NGHBR_BAND and NGHBR_FREQ fields are not included for this neighbor base station, the base station shall set this bit to '0'.

NGHBR_BAND - Neighbor band class.

If the FREQ_INCL bit is set to '1', the base station shall set this field to the CDMA band class, as specified in [30], corresponding to the CDMA frequency assignment for the CDMA Channel containing the Paging Channel the mobile station is to search. If the FREQ_INCL bit is set to '0', the base station shall omit this field.

NGHBR_FREQ - Neighbor frequency assignment.

If the FREQ_INCL bit is set to ‘1’, the base station shall set this field to the CDMA Channel number, in the specified CDMA band class, corresponding to the CDMA frequency assignment for the CDMA Channel containing the Paging Channel the mobile station is to search. If the FREQ_INCL bit is set to ‘0’, the base station shall omit this field.

3.7.2.3.2.15 Status Request Message

MSG_TAG: STRQM

Field	Length (bits)
RESERVED	4
QUAL_INFO_TYPE	8
QUAL_INFO_LEN	3
Type-specific fields	8 × QUAL_INFO_LEN
NUM_FIELDS	4

NUM_FIELDS occurrences of the following field:

{ (NUM_FIELDS)

RECORD_TYPE	8

} (NUM_FIELDS)

RESERVED - Reserved bits.

The base station shall set this field to '0000'.

QUAL_INFO_TYPE - Qualification information type.

The base station shall set this field to the value shown in Table 3.7.2.3.2.15-1 to show the inclusion of qualification information in the type-specific fields. The base station shall include the required qualification information in this message.

Table 3.7.2.3.2.15-1. Qualification Information Type

Value (binary)	Included Information
00000000	None
00000001	BAND_CLASS
00000010	BAND_CLASS and OP_MODE
All other values are reserved.	

QUAL_INFO_LEN - Qualification information length.

The base station shall set this field to the number of octets included in the type-specific fields of the qualification information.

Type-specific fields - Type-specific fields.

The base station shall set these fields to the qualification information according to the QUAL_INFO_TYPE field.

If QUAL_INFO_TYPE is equal to '00000000', the type-specific fields are omitted.

If QUAL_INFO_TYPE is equal to '00000001', the base station shall use the following fixed-length format for the type-specific fields:

Type-specific Field	Length (bits)
BAND_CLASS	5
RESERVED	3

If QUAL_INFO_TYPE is equal to '00000010', the base station shall use the following fixed-length format for the type-specific fields:

Type-specific Field	Length (bits)
BAND_CLASS	5
OP_MODE	8
RESERVED	3

BAND_CLASS - Band class.

The base station shall set this field as defined in [30] to specify the band class qualification information.

OP_MODE - Operating mode.

The base station shall set this field as shown in Table 3.7.2.3.2.15-2 to specify the operating mode qualification information if MOB_P_REV of the current band class is less than or equal to three. The base station shall set this field as shown in Table 3.7.2.3.2.15-3 to specify the operating mode qualification information if MOB_P_REV of the current band class is greater than three.

Table 3.7.2.3.2.15-2. Operating Mode for MOB_P_REV Less Than or Equal to Three

Description	Value (binary)
CDMA mode in Band Class 1 or Band Class 4	00000000
CDMA mode in Band Class 0 or Band Class 3	00000001
Reserved (Previously: analog mode)	00000010
Reserved (Previously: wide analog mode)	00000011
Reserved (Previously: Narrow analog mode)	00000100
All other values are reserved.	

Table 3.7.2.3.2.15-3. Operating Mode for MOB_P_REV Greater Than Three

Description	Standards	Value (binary)
CDMA mode		00000000 or 00000001
Reserved (Previously: Analog mode)		00000010
Reserved (Previously: Wide analog mode)		00000011
Reserved (Previously: Narrow analog mode)		00000100
DS-41 mode	[32]	00000101
MC-MAP mode	[31]	00000110
All other values are reserved.		

NUM_FIELDS - Number of requested fields in this message.

The base station shall set this field to the number of occurrences of RECORD_TYPE in this message.

The base station shall only request the status information records qualified by the included qualification information (see Table 2.7.4-1) in this message. The base station shall include one occurrence of the following field for each information record that is requested:

RECORD_TYPE - Information record type.

The base station shall set this field to the record type value shown in Table 2.7.4-1 corresponding to the information record requested.

If MOB_P_REV is equal to or greater than seven, the base station shall not request the Call Mode information record (record type '00000111' in Table2.7.4-1).

3.7.2.3.2.16 Service Redirection Message

MSG_TAG: SRDM

Field	Length (bits)
RETURN_IF_FAIL	1
DELETE_TMSI	1
REDIRECT_TYPE	1
RECORD_TYPE	8
RECORD_LEN	8
Type-specific fields	8 × RECORD_LEN

RETURN_IF_FAIL - Return if fail indicator.

The base station shall set this field to '1' if the mobile station is required to return to the system from which it is being redirected upon failure to obtain service using the redirection criteria specified in this message; otherwise, the base station shall set this field to '0'.

DELETE_TMSI - Delete TMSI indicator.

The base station shall set this field to '1' if the mobile station is required to delete the TMSI assigned to the mobile station; otherwise, the base station shall set this field to '0'.

REDIRECT_TYPE - Redirect indicator.

The base station shall set this field to the REDIRECT_TYPE value shown in table 3.7.2.3.2.16-1 corresponding to the redirection type.

Table 3.7.2.3.2.16-1. Redirection Types

Description	REDIRECT_TYPE (binary)
Normal redirection	0
NDSS redirection	1

RECORD_TYPE - Redirection record type.

The base station shall set this field to the RECORD_TYPE value shown in Table 3.7.2.3.2.16-2 corresponding to the type of redirection specified by this record.

Table 3.7.2.3.2.16-2. Redirection Record Types

Description	RECORD_TYPE (binary)
NDSS off indication	00000000
Reserved (Previously: Redirection to an analog system)	00000001
Redirection to a CDMA system as defined in [24] and [2]	00000010
Reserved (Previously: Redirection to a TACS analog system as defined in Department of Trade and Industry's TACS Mobile Station-Land Station Compatibility Specification, Issue 4, Amendment 1.)	00000011
Reserved (Previously: Redirection to a JTACS analog system as defined in ARIB's RCR STD-36.)	00000100
Redirection to a DS-41 system as defined in [32].	00000101
All other RECORD_TYPE values are reserved	

RECORD_LEN - Redirection record length.

If RECORD_TYPE equals to '00000000', the base station shall set this field to '00000000'; otherwise, the base station shall set this field to the number of octets in the type-specific fields of this redirection record.

Type-specific fields - Redirection record type-specific fields.

The base station shall include type-specific fields based on the RECORD_TYPE of this redirection record.

If RECORD_TYPE is equal to '00000000', the base station shall not include the type-specific fields.

If RECORD_TYPE is equal to '00000010', the base station shall include the following fields:

Subfield	Length (bits)
BAND_CLASS	5
EXPECTED_SID	15
EXPECTED_NID	16
RESERVED	4
NUM_CHANS	4

NUM_CHANS occurrences of the following field:

{ (NUM_CHANS)

CDMA_CHAN	11

} (NUM_CHANS)

RESERVED	0-7 (as needed)

BAND_CLASS - Band class.

The base station shall set this field to the CDMA band class, as specified in [30].

EXPECTED_SID - Expected SID.

If the base station is redirecting the mobile station to a specific system, the base station shall set this field to the SID of that system; otherwise, the base station shall set this field to 0.

EXPECTED_NID - Expected NID.

If the base station is redirecting the mobile station to a specific network, the base station shall set this field to the NID of that network; otherwise, the base station shall set this field to 65535.

RESERVED - Reserved bits.

The base station shall set this field to ‘0000’.

NUM_CHANS - Number of CDMA Channels.

The base station shall set this field to the number of occurrences of the CDMA_CHAN field in this record.

CDMA_CHAN - CDMA Channel number.

For each CDMA Channel on which the mobile station is to attempt to acquire a CDMA system, the base station shall include one occurrence of this field specifying the associated CDMA Channel number.

RESERVED - Reserved bits.

The base station shall add reserved bits as needed in order to make the length of the record equal to an integer number of octets. The base station shall set these bits to ‘0’.

3.7.2.3.2.17 General Page Message

MSG_TAG: GPM

When Layer 3 at the base station sends a PDU corresponding to the *General Page Message* to Layer 2, it also sends the GPM Common fields to Layer 2. These GPM Common fields and PDUs are used by Layer 2 to assemble a Layer 2 PDU corresponding to the *General Page Message* (see [4]).

GPM Common Fields:

Field	**Length (bits)**
CONFIG_MSG_SEQ	6
ACC_MSG_SEQ	6
CLASS_0_DONE	1
CLASS_1_DONE	1
TMSI_DONE	1
ORDERED_TMSIS	1
BROADCAST_DONE	1
RESERVED	4
ADD_LENGTH	3
ADD_PFIELD	8 × ADD_LENGTH

PDU Format for a mobile station-addressed page:

Field	**Length (bits)**
SERVICE_OPTION	0 or 16

PDU Format for a broadcast page: There are no Layer 3 fields associated with this record.

PDU Format for an enhanced broadcast page:

Field	Length (bits)
BCN	3
TIME_OFFSET	10
REPEAT_TIME_OFFSET	0 or 5
ADD_BCAST_RECORD	0 or 8 × EXT_BCAST_-SDU_LENGTH (see [4])

CONFIG_MSG_SEQ - Configuration message sequence number.

The base station shall set this field to CONFIG_SEQ (see 3.6.2.2).

ACC_MSG_SEQ - Access parameters message sequence number.

The base station shall set this field to ACC_CONFIG_SEQ (see 3.6.2.2).

CLASS_0_DONE - Class 0 pages are done.

If all messages and records directed to mobile stations operating in the slotted mode, active in this slot, and having an assigned class 0 IMSI have been sent by the end of this *General Page Message*, the base station shall set this field to '1'; otherwise, the base station shall set this field to '0'.

CLASS_1_DONE - Class 1 pages are done.

If all messages and records directed to mobile stations operating in the slotted mode, active in this slot, and having an assigned class 1 IMSI have been sent by the end of this *General Page Message*, the base station shall set this field to '1'; otherwise, the base station shall set this field to '0'.

TMSI_DONE - TMSI pages are done.

If all the page records having PAGE_CLASS equal to '10' or other directed messages for mobile stations operating in the slotted mode, active in this slot, and having an assigned TMSI have been sent by the end of this *General Page Message*, the base station shall set this field to '1'; otherwise, the base station shall set this field to '0'.

ORDERED_TMSIS - TMSIs sent in numerical order.

If all the page records of PAGE_CLASS equal to '10' are sent such that the TMSI code values of the TMSI_CODE_ADDR fields for the mobile stations operating in the slotted mode are in ascending numerical order in all the *General Page Messages* sent within this slot, the base station shall set this field to '1'; otherwise, the base station shall set this field to '0'.

BROADCAST_DONE - Broadcast pages are done.

If all broadcast page records (PAGE_CLASS equal to '11') have been sent by the end of this *General Page Message*, the base station shall set this field to '1'; otherwise, the base station shall set this field to '0'.

RESERVED - Reserved bits.

The base station shall set this field to '0000'.

ADD_LENGTH - Number of octets in the page message specific fields.

If there are no additional page message specific fields, the base station shall set this field to '000'.

ADD_PFIELD - Additional page message specific fields.

The base station shall not include any additional page message specific fields, if ADD_LENGTH is '000'.

SERVICE_OPTION - Service option.

If the base station requests a special service option (i.e., the SDU_INCLUDED field, see [4], is set to '1'), the base station shall set this field to the service option code shown in [30], corresponding to the requested service option; otherwise, the base station shall omit this field.

BCN - Broadcast Control Channel Number.

If NUM_BCCH_BCAST is equal to '000', base station shall set this field to '000' and this field is to be ignored by the mobile station.

Otherwise, the base station shall set this field to the Broadcast Control Channel number of the F-BCCH to which the mobile station is being redirected. The base station shall not set this field to '000' (reserved) or '001'.

TIME_OFFSET - BCCH time offset.

If NUM_BCCH_BCAST is equal to '000', base station shall set this field to one less than the time offset, in units of 40 ms, from the beginning of the slot in which this message began to the beginning of the Forward Common Control Channel slot to which the mobile station is being directed.

Otherwise,,the base station shall set this field to one less than the time offset, in units of 40 ms, from the beginning of the slot in which this message began to the beginning of the Broadcast Control Channel slot to which the mobile station is being directed.

REPEAT_TIME_OFFSET - BCCH offset of repeat.

If EXT_BCAST_SDU_LENGTH_IND (see [4]) is set to '01' or '11', the base station shall set this field as follows:

- If NUM_BCCH_BCAST is equal to ‘000’, the base station shall set this field to one less than the time offset, in units of 40 ms, from the time specified by TIME_OFFSET to the beginning of the Forward Common Control Channel slot to which the mobile station is being directed for a repeat of the broadcast message.

- Otherwise, the base station shall set this field to one less than the time offset, in units of 40 ms, from the time specified by TIME_OFFSET to the beginning of the Broadcast Control Channel slot to which the mobile station is being directed for a repeat of the broadcast message;

Otherwise, the base station shall omit this field.

ADD_BCAST_RECORD - Additional broadcast information record.

The base station shall omit this field if EXT_BCAST_SDU_LENGTH_IND (see [4]) is set to ‘00’ or ‘01’; otherwise, the base station shall include EXT_BCAST_SDU_LENGTH (see [4]) octets in this field.

3.7.2.3.2.18 Global Service Redirection Message

MSG_TAG: GSRDM

Field	Length (bits)
PILOT_PN	9
CONFIG_MSG_SEQ	6
REDIRECT_ACCOLC	16
RETURN_IF_FAIL	1
DELETE_TMSI	1
EXCL_P_REV_MS	1
RECORD_TYPE	8
RECORD_LEN	8
Type-specific fields	8 × RECORD_LEN

PILOT_PN - Pilot PN sequence offset index.

The base station shall set this field to the pilot PN sequence offset for this base station, in units of 64 PN chips.

CONFIG_MSG_SEQ - Configuration message sequence number.

The base station shall set this field to CONFIG_SEQ (see 3.6.2.2).

REDIRECT_ACCOLC - Redirected access overload classes.

This field consists of the following subfields:

Subfield	Length (bits)	Subfield Description
ACCOLC_0	1	Access overload class 0
ACCOLC_1	1	Access overload class 1
ACCOLC_2	1	Access overload class 2
ACCOLC_3	1	Access overload class 3
ACCOLC_4	1	Access overload class 4
ACCOLC_5	1	Access overload class 5
ACCOLC_6	1	Access overload class 6
ACCOLC_7	1	Access overload class 7
ACCOLC_8	1	Access overload class 8
ACCOLC_9	1	Access overload class 9
ACCOLC_10	1	Access overload class 10
ACCOLC_11	1	Access overload class 11
ACCOLC_12	1	Access overload class 12
ACCOLC_13	1	Access overload class 13
ACCOLC_14	1	Access overload class 14
ACCOLC_15	1	Access overload class 15

The base station shall set the subfields corresponding to the access overload classes of mobile stations which are to be redirected to ‘1’, and shall set the remaining subfields to ‘0’.

RETURN_IF_FAIL - Return if fail indicator.

The base station shall set this field to ‘1’ if the mobile station is required to return to the system from which it is being redirected upon failure to obtain service using the redirection criteria specified in this message; otherwise, the base station shall set this field to ‘0’.

DELETE_TMSI - Delete TMSI indicator.

The base station shall set this field to ‘1’ if the mobile station, which the corresponding REDIRECT_ACCOLC subfield is set to ‘1’, is required to delete the TMSI assigned to the mobile station; otherwise, the base station shall set this field to ‘0’.

EXCL_P_REV_MS - Exclude redirection indicator.

If this message does not apply to mobile stations with MOB_P_REV greater than or equal to six, the base station shall set this field to '1'; otherwise, the base station shall set this field to '0'.

RECORD_TYPE - Redirection record type.

The base station shall set this field to the RECORD_TYPE value shown in Table 3.7.2.3.2.16-2 corresponding to the type of redirection specified by this record.

RECORD_LEN - Redirection record length.

The base station shall set this field to the number of octets in the type-specific fields of this redirection record.

Type-specific fields - Redirection record type-specific fields.

The base station shall include type-specific fields based on the RECORD_TYPE of this redirection record.

If RECORD_TYPE is equal to '00000010', the base station shall include the following fields:

Subfield	**Length (bits)**
BAND_CLASS	5
EXPECTED_SID	15
EXPECTED_NID	16
RESERVED	4
NUM_CHANS	4

NUM_CHANS occurrences of the following field:

{ (NUM_CHANS)

CDMA_CHAN	11

}(NUM_CHANS)

RESERVED	0-7 (as needed)

BAND_CLASS - Band class.

The base station shall set this field to the CDMA band class, as specified in [30].

EXPECTED_SID - Expected SID.

If the base station is redirecting the mobile station to a specific system, the base station shall set this field to the SID of that system; otherwise, the base station shall set this field to 0.

EXPECTED_NID - Expected NID.

If the base station is redirecting the mobile station to a specific network, the base station shall set this field to the NID of that network; otherwise, the base station shall set this field to 65535.

RESERVED - Reserved bits.

The base station shall set this field to ‘0000’.

NUM_CHANS - Number of CDMA Channels.

The base station shall set this field to the number of occurrences of the CDMA_CHAN field in this record.

CDMA_CHAN - CDMA Channel number.

For each CDMA Channel on which the mobile station is to attempt to acquire a CDMA system, the base station shall include one occurrence of this field specifying the associated CDMA Channel number.

RESERVED - Reserved bits.

The base station shall add reserved bits as needed in order to make the length of the record equal to an integer number of octets. The base station shall set these bits to ‘0’.

3.7.2.3.2.19 TMSI Assignment Message

MSG_TAG: TASM

Field	Length (bits)
RESERVED	5
TMSI_ZONE_LEN	4
TMSI_ZONE	8 × TMSI_ZONE_LEN
TMSI_CODE	32
TMSI_EXP_TIME	24

RESERVED - Reserved bits.

The base station shall set this field to '00000'.

TMSI_ZONE_LEN - TMSI zone length.

The base station shall set this field to the number of octets included in the TMSI_ZONE. The base station shall set this field to a value in the range 1 to 8 inclusive.

TMSI_ZONE - TMSI zone.

The base station shall set this field to the TMSI zone number, as specified in [27].

TMSI_CODE - Temporary mobile station identity code.

The base station shall set this field to the 32-bit TMSI code assigned to the mobile station.

If the base station is to deassign the TMSI, the base station shall set all the bits in this field to '1'.

TMSI_EXP_TIME - TMSI expiration time.

The base station shall set this field to the System Time in the units of 80 ms $\times 2^{12}$ when the TMSI is to expire.

3.7.2.3.2.20 PACA Message

MSG_TAG: PACAM

Field	Length (bits)
RESERVED	7
PURPOSE	4
Q_POS	8
PACA_TIMEOUT	3

RESERVED - Reserved bits.

The base station shall set this field to ‘0000000’.

PURPOSE - Purpose of the *PACA Message*.

The base station shall set this field to the appropriate PURPOSE code from Table 3.7.2.3.2.20-1 to indicate the purpose of the message.

Table 3.7.2.3.2.20-1. Purpose of PACA Message

PURPOSE (binary)	Meaning
0000	Indicates that the purpose of the message is to respond to an *Origination Message*.
0001	Indicates that the purpose of the message is to provide the queue position of the PACA call.
0010	Indicates that the purpose of the message is to instruct the mobile station to re-originate the PACA call.
0011	Indicates that the purpose of the message is to cancel the PACA call.
0100 – 1111	Reserved

Q_POS - PACA queue position.

If the PURPOSE field of this message is set to ‘0000’ or ‘0001’, the base station shall set this field to the queue position of the PACA call. If the queue position exceeds 255, the base station shall set this field to ‘11111111’. If the queue position is unknown or the PURPOSE field of this message is set to ‘0010’ or ‘0011’, the base station shall set this field to ‘00000000’.

PACA_TIMEOUT - PACA state timer duration.

The base station shall set this field to the PACA_TIMEOUT value shown in Table 3.7.2.3.2.20-2 corresponding to the length of the PACA state timer to be used by the mobile stations.

Table 3.7.2.3.2.20-2. Value of PACA State Timer

PACA_TIMEOUT Value (binary)	Timer Length (Minutes)
000	1
001	2
010	5
011	10
100	20
101	30
110	45
111	60

3.7.2.3.2.21 Extended Channel Assignment Message

MSG_TAG: ECAM

Field	**Length (bits)**
ASSIGN_MODE	3
DIRECT_CH_ASSIGN_IND	0 or 1
RESERVED_2	4 or 5
Additional record fields	8 × (ADD_RECORD_LEN – 1) See [4]

1 If ASSIGN_MODE = '000', the additional record fields shall be:

FREQ_INCL	1
DEFAULT_CONFIG	3
BYPASS_ALERT_ANSWER	1
RESERVED	1
NUM_PILOTS	3
GRANTED_MODE	2
FRAME_OFFSET	4
ENCRYPT_MODE	2
BAND_CLASS	0 or 5
CDMA_FREQ	0 or 11

NUM_PILOTS plus one occurrences of the following record:

{ (NUM_PILOTS+1)

PILOT_PN	9
PWR_COMB_IND	1
CODE_CHAN	8

} (NUM_PILOTS+1)

FOR_FCH_RC	5
REV_FCH_RC	5
FPC_FCH_INIT_SETPT	8
FPC_SUBCHAN_GAIN	5
RLGAIN_ADJ	4
FPC_FCH_FER	5
FPC_FCH_MIN_SETPT	8
FPC_FCH_MAX_SETPT	8
REV_FCH_GATING_MODE	1
REV_PWR_CNTL_DELAY_INCL	0 or 1
REV_PWR_CNTL_DELAY	0 or 2
D_SIG_ENCRYPT_MODE	0 or 3
ENC_KEY_SIZE	0 or 3

(continues on next page)

2

C_SIG_ENCRYPT_MODE_INCL	1
C_SIG_ENCRYPT_MODE	0 or 3
MSG_INT_INFO_INCL	1
CHANGE_KEYS	0 or 1
USE_UAK	0 or 1
PLCM_TYPE_INCL	1
PLCM_TYPE	0 or 4
PLCM_39	0 or 39
RESERVED	0 – 7 (as needed)

If ASSIGN_MODE = '001', the additional record fields shall be:

RESPOND	1
FREQ_INCL	1
BAND_CLASS	0 or 5
CDMA_FREQ	0 or 11
NUM_PILOTS	6

NUM_PILOTS plus one occurrences of the following field:

{ (NUM_PILOTS+1)

PILOT_PN	9

} (NUM_PILOTS+1)

RESERVED	0 – 7 (as needed)

If ASSIGN_MODE = ‘100’, the additional record fields shall be:

FREQ_INCL	1
BAND_CLASS	0 or 5
CDMA_FREQ	0 or 11
BYPASS_ALERT_ANSWER	1
GRANTED_MODE	2
SR_ID_RESTORE	0 or 3
SR_ID_RESTORE_BITMAP	0 or 6
DEFAULT_CONFIG	3
FOR_RC	5
REV_RC	5
FRAME_OFFSET	4
ENCRYPT_MODE	2
FPC_SUBCHAN_GAIN	5
RLGAIN_ADJ	4
NUM_PILOTS	3
CH_IND	2
CH_RECORD_LEN	5
CH_RECORD_FIELDS	8 × CH_RECORD_LEN
REV_FCH_GATING_MODE	1
REV_PWR_CNTL_DELAY_INCL	0 or 1
REV_PWR_CNTL_DELAY	0 or 2
D_SIG_ENCRYPT_MODE	0 or 3
ENC_KEY_SIZE	0 or 3
C_SIG_ENCRYPT_MODE_INCL	1
C_SIG_ENCRYPT_MODE	0 or 3
3XFL_1XRL_INCL	1
1XRL_FREQ_OFFSET	0 or 2

(continues on next page)

MSG_INT_INFO_INCL	1
CHANGE_KEYS	0 or 1
USE_UAK	0 or 1
PLCM_TYPE_INCL	1
PLCM_TYPE	0 or 4
PLCM_39	0 or 39
SYNC_ID_INCL	0 or 1
SYNC_ID_LEN	0 or 4
SYNC_ID	0 or (8 × SYNC_ID_LEN)
CONFIG_MSG_SEQ	0 or 6
RTC_NOM_PWR	0 or 5
RESPOND_IND	0 or 1
DIRECT_CH_ASSIGN_RECOVER_IND	0 or 1
FIXED_PREAMBLE_TRANSMIT_IND	0 or 1
FIXED_NUM_PREAMBLE	0 or 3
EARLY_RL_TRANSMIT_IND	1
TX_PWR_LIMIT_INCL	1
TX_PWR_LIMIT	0 or 6
RESERVED	0 – 7 (as needed)

If CH_IND = ‘01’, the CH_RECORD_FIELDS shall be:

FPC_FCH_INIT_SETPT	8
FPC_FCH_FER	5
FPC_FCH_MIN_SETPT	8
FPC_FCH_MAX_SETPT	8

NUM_PILOTS plus one occurrences of the following record:

{ (NUM_PILOTS+1)

PILOT_PN	9
ADD_PILOT_REC_INCL	1
PILOT_REC_TYPE	0 or 3
RECORD_LEN	0 or 3
Type-specific fields	0 or (8 × RECORD_LEN)
PWR_COMB_IND	1
CODE_CHAN_FCH	11
QOF_MASK_ID_FCH	2

} (NUM_PILOTS+1)

3X_FCH_INFO_INCL	1

NUM_PILOTS plus one occurrences of the following record if 3X_FCH_INFO_INCL is set to ‘1’:

{ (NUM_PILOTS+1)

3X_FCH_LOW_INCL	1
QOF_MASK_ID_FCH_LOW	0 or 2
CODE_CHAN_FCH_LOW	0 or 11
3X_FCH_HIGH_INCL	1
QOF_MASK_ID_FCH_HIGH	0 or 2
CODE_CHAN_FCH_HIGH	0 or 11

} (NUM_PILOTS+1)

RESERVED	0 – 7 (as needed)

If CH_IND = ‘10’, the CH_RECORD_FIELDS shall be:

FPC_DCCH_INIT_SETPT	8
FPC_DCCH_FER	5
FPC_DCCH_MIN_SETPT	8
FPC_DCCH_MAX_SETPT	8

NUM_PILOTS plus one occurrences of the following record:

{ (NUM_PILOTS+1)

PILOT_PN	9
ADD_PILOT_REC_INCL	1
PILOT_REC_TYPE	0 or 3
RECORD_LEN	0 or 3
Type-specific fields	0 or (8 × RECORD_LEN)
PWR_COMB_IND	1
CODE_CHAN_DCCH	11
QOF_MASK_ID_DCCH	2

} (NUM_PILOTS+1)

3X_DCCH_INFO_INCL	1

NUM_PILOTS plus one occurrences of the following record if 3X_DCCH_INFO_INCL is set to ‘1’:

{ (NUM_PILOTS+1)

3X_DCCH_LOW_INCL	1
QOF_MASK_ID_DCCH_LOW	0 or 2
CODE_CHAN_DCCH_LOW	0 or 11
3X_DCCH_HIGH_INCL	1
QOF_MASK_ID_DCCH_HIGH	0 or 2
CODE_CHAN_DCCH_HIGH	0 or 11

} (NUM_PILOTS+1)

FUNDICATED_BCMC_IND	1

NUM_PILOTS plus one occurrence of the following record if FUNDICATED_BCMC_IND is set to ‘1’:

{ (NUM_PILOTS+1)

FOR_CPCCH_WALSH	7
FOR_CPCSCH	5

} (NUM_PILOTS+1)

RESERVED	0-7 (as needed)

If CH_IND = ‘11’, the CH_RECORD_FIELDS shall be:

FPC_FCH_INIT_SETPT	8
FPC_DCCH_INIT_SETPT	8
FPC_PRI_CHAN	1
FPC_FCH_FER	5
FPC_FCH_MIN_SETPT	8
FPC_FCH_MAX_SETPT	8
FPC_DCCH_FER	5
FPC_DCCH_MIN_SETPT	8
FPC_DCCH_MAX_SETPT	8

NUM_PILOTS plus one occurrences of the following record:

{ (NUM_PILOTS+1)

PILOT_PN	9
ADD_PILOT_REC_INCL	1
PILOT_REC_TYPE	0 or 3
RECORD_LEN	0 or 3
Type-specific fields	0 or (8 × RECORD_LEN)
PWR_COMB_IND	1
CODE_CHAN_FCH	11
QOF_MASK_ID_FCH	2
CODE_CHAN_DCCH	11
QOF_MASK_ID_DCCH	2

} (NUM_PILOTS+1)

3X_FCH_INFO_INCL	1

NUM_PILOTS plus one occurrence of the following record if 3X_FCH_INFO_INCL is set to ‘1’:

{ (NUM_PILOTS+1)

3X_FCH_LOW_INCL	1
QOF_MASK_ID_FCH_LOW	0 or 2
CODE_CHAN_FCH_LOW	0 or 11

(continues on next page)

3X_FCH_HIGH_INCL	1
QOF_MASK_ID_FCH_HIGH	0 or 2
CODE_CHAN_FCH_HIGH	0 or 11

} (NUM_PILOTS+1)

3X_DCCH_INFO_INCL	1

NUM_PILOTS plus one occurrence of the following record if 3X_DCCH_INFO_INCL is set to '1':

{ (NUM_PILOTS+1)

3X_DCCH_LOW_INCL	1
QOF_MASK_ID_DCCH_LOW	0 or 2
CODE_CHAN_DCCH_LOW	0 or 11
3X_DCCH_HIGH_INCL	1
QOF_MASK_ID_DCCH_HIGH	0 or 2
CODE_CHAN_DCCH_HIGH	0 or 11

} (NUM_PILOTS+1)

FUNDICATED_BCMC_IND	1
REV_FCH_ASSIGNED	0 or 1
ADD_PLCM_FOR_FCH_INCL	0 or 1
ADD_PLCM_FOR_FCH_TYPE	0 or 1
ADD_PLCM_FOR_FCH_39	0 or 39
FOR_CPCCH_INFO_INCL	0 or 1

NUM_PILOTS plus one occurrence of the following record if FOR_CPCCH_INFO_INCL is set to '1':

{ (NUM_PILOTS+1)

FOR_CPCCH_WALSH	7
FOR_CPCSCH	5

} (NUM_PILOTS+1)

RESERVED	0 – 7 (as needed)

If ASSIGN_MODE = ‘101’, the additional record fields shall be:

FREQ_INCL	1
BAND_CLASS	0 or 5
CDMA_FREQ	0 or 11
BYPASS_ALERT_ANSWER	1
GRANTED_MODE	2
SR_ID_RESTORE	0 or 3
SR_ID_RESTORE_BITMAP	0 or 6
FRAME_OFFSET	4
ENCRYPT_MODE	2
D_SIG_ENCRYPT_MODE	0 or 3
ENC_KEY_SIZE	0 or 3
C_SIG_ENCRYPT_MODE_INCL	1
C_SIG_ENCRYPT_MODE	0 or 3
MSG_INT_INFO_INCL	1
CHANGE_KEYS	0 or 1
USE_UAK	0 or 1
PLCM_TYPE_INCL	1
PLCM_TYPE	0 or 4
PLCM_39	0 or 39
RLGAIN_ADJ	4
NUM_PILOTS	3
EXT_CH_IND	5
FPC_SUBCHAN_GAIN	0 or 5
REV_FCH_GATING_MODE	0 or 1
REV_PWR_CNTL_DELAY_INCL	0 or 1
REV_PWR_CNTL_DELAY	0 or 2
FULL_CI_FEEDBACK_IND	1
FOR_CPCCH_RATE	0 or 2
FOR_CPCCH_UPDATE_RATE	0 or 2
REV_CQICH_FRAME_OFFSET	4
REV_CQICH_REPS	2
REV_ACKCH_REPS	2
FOR_PDCH_RC	5
REV_PDCH_RC	0 or 5
FOR_FCH_DCCH_RC	0 or 5

REV_FCH_DCCH_RC	0 or 5
FPC_PRI_CHAN	0 or 1
FPC_FCH_INIT_SETPT	0 or 8
FPC_FCH_FER	0 or 5
FPC_FCH_MIN_SETPT	0 or 8
FPC_FCH_MAX_SETPT	0 or 8
FPC_DCCH_INIT_SETPT	0 or 8
FPC_DCCH_FER	0 or 5
FPC_DCCH_MIN_SETPT	0 or 8
FPC_DCCH_MAX_SETPT	0 or 8
PDCH_GROUP_IND_INCL	1
FOR_PDCH_PARMS_INCL	1
FOR_PDCH_RLGAIN_INCL	0 or 1
RLGAIN_ACKCH_PILOT	0 or 6
RLGAIN_CQICH_PILOT	0 or 6
NUM_SOFT_SWITCHING_FRAMES	0 or 4
NUM_SOFTER_SWITCHING_FRAMES	0 or 4
NUM_SOFT_SWITCHING_SLOTS	0 or 2
NUM_SOFTER_SWITCHING_SLOTS	0 or 2
CHM_SWITCHING_PARMS_INCL	0 or 1
NUM_SOFT_SWITCHING_FRAMES_CHM	0 or 4
NUM_SOFTER_SWITCHING_FRAMES_CHM	0 or 4
NUM_SOFT_SWITCHING_SLOTS_CHM	0 or 2
NUM_SOFTER_SWITCHING_SLOTS_CHM	0 or 2
PDCH_SOFT_SWITCHING_DELAY	0 or 8
PDCH_SOFTER_SWITCHING_DELAY	0 or 8
TX_DISABLED_TIMER_INCL	1
TX_DISABLED_TIMER	0 or 8
FOR_GCH_ASSIGNED	0 or 1
FOR_RCCH_ASSIGNED	0 or 1
FOR_RCCH_DRC_MODE	0 or 1
FOR_RCCH_REPETITION	0 or 2
FOR_RCCH_UPDATE_RATE	0 or 2
FOR_ACKCH_ASSIGNED	0 or 1

FOR_ACKCH_MODE	0 or 2
FOR_ACKCH_COMB_SEL	0 or 1
REV_PDCH_PARMS_INCL	0 or 1
REV_PDCH_RLGAIN_INCL	0 or 1
RLGAIN_SPICH_PILOT	0 or 6
RLGAIN_REQCH_PILOT	0 or 6
RLGAIN_PDCCH_PILOT	0 or 6
REV_PDCH_PARMS_1_INCL	0 or 1
REV_PDCH_TABLE_SEL	0 or 1
REV_PDCH_MAX_AUTO_TPR	0 or 8

NUM_PILOTS plus one occurrence of the following record:

{ (NUM_PILOTS+1)

PILOT_PN	9
ADD_PILOT_REC_INCL	1
PILOT_REC_TYPE	0 or 3
RECORD_LEN	0 or 3
Type-specific fields	0 or (8 × RECORD_LEN)
FOR_PDCH_INCL	1
WALSH_TABLE_ID	0 or 3
NUM_PDCCH	0 or 3

NUM_PDCCH+1 occurrences of the following record:

{ (NUM_PDCCH+1)

FOR_PDCCH_WALSH	0 or 6

} (NUM_PDCCH+1)

MAC_ID	0 or 8
REV_CQICH_COVER	0 or 3
FOR_CPCCH_WALSH	0 or 7
FOR_CPCSCH	0 or 7
PWR_COMB_IND	1
PDCH_GROUP_IND	0 or 1
CODE_CHAN_FCH	0 or 11
QOF_MASK_ID_FCH	0 or 2
CODE_CHAN_DCCH	0 or 11
QOF_MASK_ID_DCCH	0 or 2

FOR_ACKCH_WALSH_INDEX	0 or 6
FOR_ACKSCH_INDEX	0 or 8
FOR_RCCH_INCL	0 or 1
FOR_RCCH_WALSH_INDEX	0 or 7
FOR_RCSCH_INDEX	0 or 7
NUM_FOR_GCH	0 or 2

NUM_FOR_GCH occurrences of the following record:

{ (NUM_FOR_GCH)

FOR_GCH_WALSH_INDEX	0 or 8

} (NUM_FOR_GCH)

} (NUM_PILOTS+1)

SYNC_ID_INCL	0 or 1
SYNC_ID_LEN	0 or 4
SYNC_ID	0 or (8 × SYNC_ID_LEN)
CONFIG_MSG_SEQ	0 or 6
RTC_NOM_PWR	0 or 5
RESPOND_IND	0 or 1
DIRECT_CH_ASSIGN_RECOVER_IND	0 or 1
EARLY_RL_TRANSMIT_IND	0 or 1
FUNDICATED_BCMC_IND	1
ADD_PLCM_FOR_FCH_INCL	0 or 1
ADD_PLCM_FOR_FCH_TYPE	0 or 1
ADD_PLCM_FOR_FCH_39	0 or 39
FIXED_PREAMBLE_TRANSMIT_IND	0 or 1
FIXED_NUM_PREAMBLE	0 or 3
TX_PWR_LIMIT_INCL	1
TX_PWR_LIMIT	0 or 6
RESERVED	0~7 (as needed)

ASSIGN_MODE - Assignment mode.

The base station shall set this field to the value shown in Table 3.7.2.3.2.21-1 corresponding to the assignment mode for this assignment.

Table 3.7.2.3.2.21-1. Assignment Mode

Value (binary)	Assignment Mode
000	Traffic Channel Assignment
001	Paging Channel Assignment
010	Reserved (Previously: Acquire Analog System)
011	Reserved (Previously: Analog Voice Channel Assignment)
100	Enhanced Traffic Channel Assignment
101	Packet Data Traffic Channel Assignment
All other values are reserved.	

DIRECT_CH_ASSIGN_IND - Direct Channel Assignment Indicator.

If ASSIGN_MODE is set to a value other than '100' or '101', the base station shall omit this field; otherwise, the base station shall include this field and set it as follows:

If any channel assigned by this message is to use Radio Configuration 1 or 2 (see [2]), then the base station shall set this field to '0'. Otherwise, base station shall set this field as follows:

– If this message is for a mobile station terminated call using direct channel assignment, the base station shall set this field to '1'; otherwise, the base station shall set this field to '0'.

If this field is set to '1', the base station should send this message in unassured mode.

RESERVED_2 - Reserved bits.

If ASSIGN_MODE is set to '100' or '101', the base station shall set this field to '0000'; otherwise, the base station shall set this field to '00000'.

Additional record fields - Additional record fields.

The additional record fields are determined by the value of ASSIGN_MODE, as described below.

If the ASSIGN_MODE field is set to '000', the base station shall include the following fields:

FREQ_INCL - Frequency included indicator.

If the BAND_CLASS and CDMA_FREQ fields are included in this assignment record, the base station shall set this bit to '1'. If the BAND_CLASS and CDMA_FREQ fields are not included in this assignment record, the base station shall set this bit to '0'.

DEFAULT_CONFIG - Default Configuration.

If the GRANTED_MODE field is set to '00', the base station shall set this field as specified in Table 3.7.2.3.2.21-2 to indicate an initial multiplex option and radio configuration for the Forward and Reverse Traffic Channels.

If MOB_P_REV is less than six, the base station shall not set this field to '100'.

Table 3.7.2.3.2.21-2. Default Configuration

Value (binary)	Default Configuration
000	Multiplex Option 1 and Radio Configuration 1 for both the Forward Traffic Channel and the Reverse Traffic Channel
001	Multiplex Option 2 and Radio Configuration 2 for both the Forward Traffic Channel and the Reverse Traffic Channel
010	Multiplex Option 1 and Radio Configuration 1 for the Forward Traffic channel; Multiplex Option 2 and Radio Configuration 2 for the Reverse Traffic channel
011	Multiplex Option 2 and Radio Configuration 2 for the Forward Traffic channel; Multiplex Option 1 and Radio Configuration 1 for the Reverse Traffic channel
100	FOR_FCH_RC or FOR_RC included in this message for the Forward Fundamental Channel or the Forward Dedicated Control Channel and REV_FCH_RC or REV_RC included in this message for the Reverse Fundamental or the Reverse Dedicated Control Channel. Use 20ms frames. Use Multiplex Option 1 for radio configurations that include the bit rate of 9600 bps; Use Multiplex Option 2 for radio configurations that include the bit rate of 14400 bps.
All other values are reserved.	

BYPASS_ALERT_ANSWER - Bypass alert indicator.

If the mobile station is to bypass the *Waiting for Order Substate* and the *Waiting for Mobile Station Answer Substate*, the base station shall set this field to '1'; otherwise, the base station shall set this field to '0'.

RESERVED - Reserved bit.

The base station shall set this field to '0'.

NUM_PILOTS - Number of pilots in the Active Set.

The base station shall set this field to number of pilots that are to be in the mobile station's Active Set on the Traffic Channel minus one. The base station shall set this field to the value in the range 0 to N_{6m}-1 inclusive.

GRANTED_MODE - Granted mode.

The base station shall set this field to '00' to indicate that the mobile station is to use an initial service configuration consisting of the multiplex option and radio configuration defined by the DEFAULT_CONFIG field for the Forward and Reverse Traffic Channels, and to indicate that service negotiation may take place before the base station sends one of the following messages: *Service Connect Message*, *General Handoff Direction Message* (with SCR) or *Universal Handoff Direction Message* (with SCR).

The base station shall set this field to '01' to indicate that the mobile station is to use an initial service configuration consisting of the default multiplex option that is derived from the radio configuration corresponding to Table 3.7.2.3.2.21-3, and to indicate that service negotiation may take place before the base station sends one of the following messages: *Service Connect Message*, *General Handoff Direction Message* (with SCR) or *Universal Handoff Direction Message* (with SCR).

The base station shall set this field to '10' to indicate that the mobile station is to use an initial service configuration consisting of the default multiplex option that is derived from the radio configuration corresponding to Table 3.7.2.3.2.21-3, and to indicate that service negotiation is not to take place before the base station sends one of the following messages: *Service Connect Message*, *General Handoff Direction Message* (with SCR) or *Universal Handoff Direction Message* (with SCR).

Table 3.7.2.3.2.21-3. Mapping between Multiplex Options and Radio Configurations

Multiplex Option	Radio Configuration
Multiplex Option 1	Forward link: RC1, RC3, RC4, RC6, RC7, RC11, or RC12 Reverse Link: RC1, RC3, RC5, or RC8
Multiplex Option2	Forward link: RC2, RC5, RC 8, or RC9 Reverse Link: RC2, RC4 or RC 6
Multiplex Option 0xf00	Forward link: RC10
Multiplex Option 0xf00 is used for the Reverse Packet Data Channel Multiplex Option for Higher Data Rates and Multiplex Option 1 is used for the Reverse Packet Data Channel Multiplex Option for Lower Data Rate (see [3])	Reverse Link: RC7

FRAME_OFFSET - Frame offset.

The Forward and Reverse Traffic Channel frames are delayed FRAME_OFFSET × 1.25 ms relative to system timing (see [2]).

The base station shall set this field to the Forward and Reverse Traffic Channel frame offset.

ENCRYPT_MODE - Message encryption mode.

The base station shall set this field to the ENCRYPT_MODE value shown in Table 3.7.2.3.2.8-2 corresponding to the encrypting mode that is to be used for signaling messages, as specified in 2.3.12.2.

BAND_CLASS - Band class.

If the FREQ_INCL bit is set to ‘1’, the base station shall set this field to the CDMA band class, as specified in [30], corresponding to the CDMA frequency assignment for the CDMA Channel containing the Forward Traffic Channel the mobile station is to use. If the FREQ_INCL bit is set to ‘0’, the base station shall omit this field.

CDMA_FREQ - Frequency assignment.

If the FREQ_INCL bit is set to '1', the base station shall set this field to the CDMA Channel number, in the specified CDMA band class, corresponding to the CDMA frequency assignment for the CDMA Channel containing the Forward Traffic Channel the mobile station is to use. If the FREQ_INCL bit is set to '0', the base station shall omit this field.

The base station shall include NUM_PILOTS plus one occurrences of the following three-field record, one for each member of the mobile station's Active Set on the Traffic Channel.

PILOT_PN - Pilot PN sequence offset index.

The base station shall set this field to the pilot PN sequence offset for this pilot in units of 64 PN chips.

PWR_COMB_IND - Power control symbol combining indicator.

If the Forward Traffic Channel associated with this pilot will carry the same closed-loop power control subchannel bits as that of the previous pilot in this message, the base station shall set this field to '1'; otherwise, the base station shall set this field to '0'. For the first occurrence of this record in the message, the base station shall set this field to '0'.

CODE_CHAN - Code channel index.

The base station shall set this field to the code channel index (see [2]) that the mobile station is to use on the Forward Traffic Channel associated with this pilot. If Radio Configuration 1, 2, 3, or 5 (see [2]) is used, the base station shall set this field in the range 1 to 63 inclusive. If Radio Configuration 4, 6, 8, 11 or 12 is used, the base station shall set this field in the range 1 to 127 inclusive. If Radio Configuration 7 or 9 is used, the base station shall set this field in the range 1 to 255 inclusive.

FOR_FCH_RC - Forward Fundamental Channel radio configuration

The base station shall set this field to the radio configuration (see Table 3.7.2.3.2.21-4) to be used by the mobile station on the Forward Fundamental Channel before the first *Service Connect Message* is sent to the mobile station.

If GRANTED_MODE is set to '00', and DEFAULT_CONFIG is not set to '100' (see Table 3.7.2.3.2.21-2), the base station shall set this field to either '00001' or '00010' (see Table 3.7.2.3.2.21-4).

REV_FCH_RC - Reverse Fundamental Channel radio configuration

The base station shall set this field to the radio configuration (see Table 3.7.2.3.2.21-4) to be used by the mobile station on the Reverse Fundamental Channel before the first *Service Connect Message* is sent to the mobile station.

If GRANTED_MODE is set to '00', and DEFAULT_CONFIG is not set to '100' (see Table 3.7.2.3.2.21-2), the base station shall set this field to either '00001' or '00010' (see Table 3.7.2.3.2.21-4).

Table 3.7.2.3.2.21-4. Radio Configurations

Value (binary)	Radio Configuration
00001	RC 1
00010	RC 2
00011	RC 3
00100	RC 4
00101	RC 5
00110	RC 6
00111	RC 7
01000	RC 8
01001	RC 9
01010	RC 10
01011	RC 11
01100	RC 12
All other values are reserved.	

FPC_FCH_INIT_SETPT - Initial Fundamental Channel outer loop E_b/N_t setpoint.

The base station shall set this field to initial Fundamental Channel outer loop E_b/N_t setpoint, in units of 0.125 dB.

FPC_SUBCHAN_GAIN - Forward power control subchannel relative gain.

The base station shall set FPC_SUBCHAN_GAIN equal to the power level of the forward link power control subchannel relative to the power level of 20 ms frames at a 9600 bps or 14400 bps rate of the Forward Fundamental Channel that the Forward Power Control Subchannel is punctured on. The base station shall set the value in units of 0.25 dB.

RLGAIN_ADJ - Reverse Traffic Channel power relative to access power.

The base station shall set this field to adjust the initial Traffic Channel transmission power relative to the Access Channel or Enhanced Access Channel transmission power. The base station shall set this field as a two's complement signed binary number, in units of 1 dB.

FPC_FCH_FER - Fundamental Channel target Frame Error Rate.

The base station shall set this field to the target Frame Error Rate on the Forward Fundamental Channel, as specified in Table 3.7.3.3.2.25-2.

FPC_FCH_MIN_SETPT - Minimum Fundamental Channel Outer Loop E_b/N_t setpoint.

The base station shall set this field to minimum Fundamental Channel Outer Loop E_b/N_t setpoint, in units of 0.125 dB.

FPC_FCH_MAX_SETPT - Maximum Fundamental Channel Outer Loop E_b/N_t setpoint.

The base station shall set this field to maximum Fundamental Channel Outer Loop E_b/N_t setpoint, in units of 0.125 dB.

REV_FCH_GATING_MODE - Reverse eighth gating mode indicator.

The base station shall set this field to '1' if the mobile station is allowed to perform the reverse eighth gating mode where the $1/8^{th}$ rate frames on the Reverse Fundamental Channel are gated off for 10 ms per frame (see [2]); otherwise, the base station shall set this field to '0'.

The base station shall not set this field to '1' if REV_FCH_GATING_REQ included in the *Origination Message* or *Page Response Message* is set to '0'.

REV_PWR_CNTL_DELAY_INCL - Reverse power control delay included indicator.

If REV_FCH_GATING_MODE is set to '0', the base station shall omit this field; otherwise, the base station shall include this field and set it as follows.

The base station shall set this field to '1' if REV_PWR_CNTL_DELAY is included in this message; otherwise, the base station shall set this field to '0'.

If the REV_FCH_GATING_MODE field in this message is set to '1' and the REV_PWR_CNTL_DELAY_INCL field in the *Extended System Parameters Message* or *MC-RR Parameters Message* is set to '0', the base station shall set this field to '1'.

REV_PWR_CNTL_DELAY - The reverse power control delay.

If REV_PWR_CNTL_DELAY_INCL is set to '0', the base station shall omit this field; otherwise, the base station shall include this field and set it as follows:

The base station shall set this field to the closed-loop reverse power control delay minus one (the closed-loop reverse power control delay is the time between the end of a gated-on reverse PCG and the beginning of the reverse PCG where the corresponding feedback is sent on the Forward Power Control Subchannel, see [2]) in units of 1.25 ms.

D_SIG_ENCRYPT_MODE - Dedicated channel signaling encryption mode indicator.

If ENCRYPT_MODE is set to '11', the base station shall include this field and shall set it to the dedicated channel signaling encryption mode, as shown in Table 3.7.4.5-1; otherwise the base station shall omit this field.

ENC_KEY_SIZE - Encryption key size indication.

If ENCRYPT_MODE is set to ‘10’ or ‘11’, the base station shall include this field and shall set it to the encryption key size, as shown in Table 3.7.4.5-2; otherwise, the base station shall omit this field.

C_SIG_ENCRYPT_MODE_INCL - Common channel signaling encryption mode included indicator.

If common channel signaling encryption information is included in this message, the base station shall set this field to ‘1’; otherwise, the base station shall set this field to ‘0’.

C_SIG_ENCRYPT_MODE - Common channel signaling encryption mode indicator.

If C_SIG_ENCRYPT_MODE_INCL is set to ‘1’, the base station shall include this field and shall set it to the common channel signaling encryption mode, as shown in Table 3.7.4.5-1; otherwise, the base station shall omit this field.

MSG_INT_INFO_INCL – Message integrity information included indicator

The base station shall set this field to ‘1’ if the base station supports message integrity; otherwise, the base station shall set this field to ‘0’. If this field is set to ‘1’, the base station shall require the LAC Layer to include a MACI in this message; otherwise, the base station shall require the LAC Layer not to include a MACI in this message.

CHANGE_KEYS – Change keys indicator

If MSG_INT_INFO_INCL is set to ‘0’, the base station shall omit this field; otherwise, the base station shall include this field and set it as follows:

The base station shall set this field to ‘0’ to command the mobile station not to update the encryption key and integrity key. The base station shall set this field to ‘1’ to command the mobile station to update the encryption key and integrity key to the latest being generated.

USE_UAK – Use UAK indicator

If MSG_INT_INFO_INCL is set to ‘0’, the base station shall omit this field; otherwise, the base station shall include this field and set it as follows:

If the base station receives an authentication vector with a UAK, the base station shall set this field to ‘1’ to indicate that the mobile station is to use UMAC; otherwise, the base station shall set this field to ‘0’ to indicate that the mobile station is to use MAC-I.

PLCM_TYPE_INCL - The Public Long Code Mask type included indicator.

The base station shall set this field to ‘1’ if the base station include PLCM_TYPE in the message; otherwise, the base station shall set this field to ‘0’.

PLCM_TYPE - The Public Long Code Mask type indicator.

If PLCM_TYPE_INCL is set to '0', the base station shall omit this field; otherwise, the base station shall include this field and set it as follows.

The base station shall set this field to the corresponding Public Long Code Mask type as specified in Table 3.7.2.3.2.21-5.

PLCM_TYPE '0010' shall not be used when the mobile station is not in its home country (i.e., the MCC of the mobile station is different from the MCC of this base station).

PLCM_TYPE '0011' shall not be used when the mobile station is not in its home network (i.e., the MCC or MNC of the mobile station is different from the MCC or MNC of this base station).

Table 3.7.2.3.2.21-5. The Public Long Code Mask Type

PLCM_TYPE (binary)	Descriptions
0000	PLCM derived from ESN
0001	PLCM specified by the base station
0010	PLCM derived from IMSI_O_S when IMSI_O is derived from IMSI_M
0011	PLCM derived from IMSI_O_S when IMSI_O is derived from IMSI_T
0100	PLCM derived from MEID
All other values	Reserved

PLCM_39 - The 39 LSBs bits of the Public Long Code Mask.

If PLCM_TYPE is not set to '0001', the base station shall omit this field; otherwise, the base station shall include this field and set it to the 39 least significant bits of the public long code mask as defined in 3.6.4.1.10.

RESERVED - Reserved bits.

The base station shall add reserved bits as needed in order to make the total length of the fields after the preceding ADD_RECORD_LEN field through this RESERVED field equal to an integer number of octets. The base station shall set these bits to '0'.

If the ASSIGN_MODE field is set to '001', the base station shall include the following fields:

RESPOND - Respond on new Access Channel indicator.

If the mobile station is to retransmit an *Origination Message* or *Page Response Message* after processing this channel assignment, the base station shall set this field to '1'. The base station may set this field to '0' only in response to a *Page Response Message*.

FREQ_INCL - Frequency included indicator.

If the BAND_CLASS and CDMA_FREQ fields are included in this assignment record, the base station shall set this bit to '1'. If the BAND_CLASS and CDMA_FREQ fields are not included in this assignment record, the base station shall set this bit to '0'.

BAND_CLASS - Band class.

If the FREQ_INCL bit is set to '1', the base station shall set this field to the CDMA band class, as specified in [30], corresponding to the CDMA frequency assignment for the CDMA Channel containing the Paging Channel the mobile station is to use. If the FREQ_INCL bit is set to '0', the base station shall omit this field.

CDMA_FREQ - Frequency assignment.

If the FREQ_INCL bit is set to '1', the base station shall set this field to the CDMA Channel number, in the specified CDMA band class, corresponding to the CDMA frequency assignment for the CDMA Channel containing the Paging Channel the mobile station is to use. If the FREQ_INCL bit is set to '0', the base station shall omit this field.

NUM_PILOTS - Number of pilots whose Paging Channel may be monitored.

The base station shall set this field to the number of pilots whose Paging Channel may be monitored by the mobile station minus one. The base station shall set this field to the value in the range 0 to $N_{8m} - 1$ inclusive.

The base station shall include NUM_PILOTS plus one occurrences of the following field record for each pilot whose Paging Channel may be monitored by the mobile station.

PILOT_PN - Pilot PN sequence offset index.

The base station shall include one occurrence of this field for each base station whose Paging Channel may be monitored by the mobile station. For each occurrence, the base station shall set this field to the pilot PN sequence offset for a base station, in units of 64 PN chips. The base station having this pilot PN sequence offset should support a Primary Paging Channel with the same Paging Channel rate as the current base station.

RESERVED - Reserved bits.

The base station shall add reserved bits as needed in order to make the total length of the fields after the preceding ADD_RECORD_LEN field through this RESERVED field equal to an integer number of octets. The base station shall set these bits to '0'.

If the ASSIGN_MODE field is set to '100', the base station shall include the following fields:

FREQ_INCL - Frequency included indicator.

If the BAND_CLASS and CDMA_FREQ fields are included in this assignment record, the base station shall set this bit to '1'. If the BAND_CLASS and CDMA_FREQ fields are not included in this assignment record, the base station shall set this bit to '0'.

BAND_CLASS - Band class.

If the FREQ_INCL bit is set to '1', the base station shall set this field to the CDMA band class, as specified in [30], corresponding to the CDMA frequency assignment for the CDMA Channel containing the Forward Traffic Channel(s) the mobile station is to use. If the FREQ_INCL bit is set to '0', the base station shall omit this field.

CDMA_FREQ - Frequency assignment.

If the FREQ_INCL bit is set to '0', the base station shall omit this field; otherwise, the base station shall include this field and set it as follows:

If FOR_RC is set to a Radio Configuration associated with Spreading Rate 1, the FREQ_INCL bit is set to '1', the base station shall set this field to the CDMA Channel number, in the specified CDMA band class, corresponding to the CDMA frequency assignment for the CDMA Channel containing the Forward Traffic Channel(s) the mobile station is to use. If FOR_RC is set to a Radio Configuration associated with Spreading Rate 3, the base station shall set this field to the center SR3 frequency assignment containing the Forward Traffic Channel(s) the mobile station is to use.

BYPASS_ALERT_ANSWER - Bypass alert indicator.

If the mobile station is to bypass the *Waiting for Order Substate* and the *Waiting for Mobile Station Answer Substate*, the base station shall set this field to '1'; otherwise, the base station shall set this field to '0'.

GRANTED_MODE - Granted mode.

The base station shall set this field to ‘00’ to indicate that the mobile station is to use an initial service configuration consisting of the multiplex option and Radio Configuration defined by the DEFAULT_CONFIG field for the Forward and Reverse Traffic channels, and to indicate that service negotiation may take place before the base station sends one of the following messages: *Service Connect Message*, *General Handoff Direction Message* (with SCR) or *Universal Handoff Direction Message* (with SCR).

The base station shall set this field to ‘01’ to indicate that the mobile station is to use an initial service configuration consisting of the default multiplex option that is derived from the radio configuration corresponding to Table 3.7.2.3.2.21-3, and to indicate that service negotiation may take place before the base station sends one of the following messages: *Service Connect Message*, *General Handoff Direction Message* (with SCR) or *Universal Handoff Direction Message* (with SCR).

The base station shall set this field to ‘10’ to indicate that the mobile station is to use an initial service configuration consisting of the default multiplex option that is derived from the radio configuration corresponding to Table 3.7.2.3.2.21-3, and to indicate that service negotiation is not to take place before the base station sends one of the following messages: *Service Connect Message*, *General Handoff Direction Message* (with SCR) or *Universal Handoff Direction Message* (with SCR).

The base station shall set this field to ‘11’ to instruct the mobile station to use the stored service configuration (that is, both the Service Configuration information record and the Non-negotiable Service Configuration information record).

SR_ID_RESTORE – Service reference identifier to be restored.

If the GRANTED_MODE field is not set to ’11’, the base station shall omit this field; otherwise, the base station shall include this field and set it as follows:

- If the mobile station is to restore all the service option connections from the stored service configuration, the base station shall set this field to ‘111’.
- If the mobile station is to restore more than one but not all the service option connections from the stored service configuration, the base station shall set this field to ‘000’.
- Otherwise, the base station shall set this field to the service reference identifier corresponding to the service option connection to be restored.

SR_ID_RESTORE_BITMAP – Bitmap of service reference identifiers to be restored.

If the SR_ID_RESTORE field is included and set to '000', the base station shall include this field and set it as follows; otherwise, the base station shall omit this field.

This field consists of the subfields defined in Table 3.7.2.3.2.21-6. The base station shall set a subfield to '1' to indicate that the mobile station is to restore the service option connection of the corresponding service reference identifier; otherwise, the base station shall set the subfield to '0'.

Table 3.7.2.3.2.21-6. SR_ID_RESTORE_BITMAP Subfields.

Subfield	Length (bits)	Subfield Description
SR_ID_1	1	sr_id 1 to be restored
SR_ID_2	1	sr_id 2 to be restored
SR_ID_3	1	sr_id 3 to be restored
SR_ID_4	1	sr_id 4 to be restored
SR_ID_5	1	sr_id 5 to be restored
SR_ID_6	1	sr_id 6 to be restored

DEFAULT_CONFIG - Default Configuration.

If the GRANTED_MODE field is set to '00', the base station shall set this field as specified in Table 3.7.2.3.2.21-2 to indicate an initial multiplex option and Radio Configuration for the Forward and Reverse Traffic Channels.

FOR_RC - Forward Traffic Channel radio configuration.

The base station shall set this field to the radio configuration (see Table 3.7.2.3.2.21-4) to be used by the mobile station on the Forward Traffic (Fundamental and Dedicated Control) Channel before the first *Service Connect Message* is sent to the mobile station.

If GRANTED_MODE is set to '00', and DEFAULT_CONFIG is not set to '100' (see Table 3.7.2.3.2.21-2), the base station shall set this field to either '00001' or '00010' (see Table 3.7.2.3.2.21-4).

REV_RC - Reverse Traffic Channel radio configuration.

The base station shall set this field to the radio configuration (see Table 3.7.2.3.2.21-4) to be used by the mobile station on the Reverse Traffic (Fundamental and Dedicated Control) Channel before the first *Service Connect Message* is sent to the mobile station.

If GRANTED_MODE is set to '00', and DEFAULT_CONFIG is not set to '100' (see Table 3.7.2.3.2.21-2), the base station shall set this field to either '0001' or '0010' (see Table 3.7.2.3.21-3).

FRAME_OFFSET - Frame offset.

The Forward and Reverse Traffic Channel frames are delayed FRAME_OFFSET × 1.25 ms relative to system timing (see [2]).

The base station shall set this field to the Forward and Reverse Traffic Channel frame offset.

ENCRYPT_MODE - Message encryption mode.

The base station shall set this field to the ENCRYPT_MODE value shown in Table 3.7.2.3.2.8-2 corresponding to the encrypting mode that is to be used for signaling messages, as specified in 2.3.12.2.

FPC_SUBCHAN_GAIN - Forward Power Control Subchannel relative gain.

The base station shall set FPC_SUBCHAN_GAIN equal to the power level of the forward link power control subchannel relative to the power level of 20 ms frames at a 9600 bps or 14400 bps rate on the Forward Fundamental Channel or the Forward Dedicated Control Channel indicated by $FPC\_PRI\_CHAN_S$. The base station shall set the value in units of 0.25 dB.

RLGAIN_ADJ - Reverse Traffic Channel power.

If DIRECT_CH_ASSIGN_IND field is set to '0', the base station shall set this field to adjust the initial Traffic Channel transmission power relative to the Access Channel or Enhanced Access Channel transmission power. The base station shall set this field as a two's complement signed binary number, in units of 1 dB.

If DIRECT_CH_ASSIGN_IND field is set to '1', the base station shall set this field to adjust the initial Traffic Channel transmission power as specified 2.6.4.2. The base station shall set this field as a two's complement signed binary number, in units of 1 dB.

NUM_PILOTS - Number of pilots in the Active Set.

The base station shall set this field to number of pilots that are to be in the mobile station's Active Set on the Traffic Channel minus one. The base station shall set this field to the value in the range 0 to N_{6m}-1 inclusive.

CH_IND - Channel indicator.

The base station shall set this field as shown in Table 3.7.2.3.2.21-7.

Table 3.7.2.3.2.21-7. Channel Indicator

Value (Binary)	Channels Being Assigned
00	Reserved
01	Fundamental Channel only
10	Dedicated Control Channel only
11	Both Fundamental Channel and Dedicated Control Channel

CH_RECORD_LEN - Channel record length.

The base station shall set this field to the number of octets in the CH_RECORD_FIELDS included in this channel record.

CH_RECORD_FIELDS - Channel record fields.

The channel record fields are determined by the value of CH_IND, as described below.

REV_FCH_GATING_MODE - Reverse eighth gating mode indicator.

The base station shall set this field to '1' if the mobile station is allowed to perform the reverse eighth gating mode where the 1/8th rate frames on the Reverse Fundamental Channel are gated off for 10 ms per frame (see [2]); otherwise, the base station shall set this field to '0'.

The base station shall not set this field to '1' if REV_FCH_GATING_REQ included in the *Origination Message* or *Page Response Message* is set to '0'.

REV_PWR_CNTL_DELAY_INCL - Reverse power control delay included indicator.

If REV_FCH_GATING_MODE is set to '0', the base station shall omit this field; otherwise, the base station shall include this field and set it as follows.

The base station shall set this field to '1' if REV_PWR_CNTL_DELAY is included in this message; otherwise, the base station shall set this field to '0'.

If the REV_FCH_GATING_MODE field in this message is set to '1' and the REV_PWR_CNTL_INCL field in the *Extended System Parameters Message* is set to '0', the base station shall set this field to '1'.

REV_PWR_CNTL_DELAY - The reverse power control delay.

If REV_PWR_CNTL_DELAY_INCL is set to '0', the base station shall omit this field; otherwise, the base station shall include this field and set it as follows:

The base station shall set this field to the closed-loop reverse power control delay minus one (the closed-loop reverse power control delay is the time between the end of a gated-on reverse PCG and the beginning of the reverse PCG where the corresponding feedback is sent on the Forward Power Control Subchannel, see [2]), in units of 1.25 ms.

D_SIG_ENCRYPT_MODE - Dedicated channel encryption mode indicator.

If ENCRYPT_MODE is set to '11', the base station shall include this field and shall set it to the dedicated channel signaling encryption mode, as shown in Table 3.7.4.5-1; otherwise the base station shall omit this field.

ENC_KEY_SIZE - Encryption key size indication.

If ENCRYPT_MODE is set to '10' or '11', the base station shall include this field and shall set it to the encryption key size, as shown in Table 3.7.4.5-2; otherwise, the base station shall omit this field.

C_SIG_ENCRYPT_MODE_INCL - Common channel signaling encryption mode included indicator.

If common channel signaling encryption information is included in this message, the base station shall set this field to '1'; otherwise, the base station shall set this field to '0'.

C_SIG_ENCRYPT_MODE - Common channel signaling encryption mode indicator.

If C_SIG_ENCRYPT_MODE_INCL is set to '1', the base station shall include this field and shall set it to the common channel signaling encryption mode, as shown in Table 3.7.4.5-1; otherwise, the base station shall omit this field.

3XFL_1XRL_INCL - 3X Forward Link and 1X Reverse Link indicator.

The base station shall set this field to '1' if the base station is assigning 3X traffic channel on the Forward Link and 1X traffic channel on the Reverse Link; otherwise, the base station shall set this field to '0'.

1XRL_FREQ_OFFSET - 1X Reverse Link frequency offset.

If 3XFL_1XRL_INCL is set to '0', the base station shall omit this field; otherwise, the base station shall set this field as follows:

The base station shall set this field to the value shown in Table 3.7.2.3.2.21-8 corresponding to the frequency offset of the 1X reverse link.

Table 3.7.2.3.2.21-8. 1X Reverse Link Frequency Offset

1XRL_FREQ_OFFSET (Binary)	1X Reverse Link frequency offset
00	The Reverse Link is on the lowest SR3 frequency
01	The Reverse Link is on the center SR3 frequency
10	The Reverse Link is on the highest SR3 frequency
11	Reserved

MSG_INT_INFO_INCL – Message integrity information included indicator

The base station shall set this field to ‘1’ if the base station supports message integrity; otherwise, the base station shall set this field to ‘0’. If this message is to include a MACI in the LAC Layer, the base station shall set this field to ‘1’.

CHANGE_KEYS – Change keys indicator

If MSG_INT_INFO_INCL is set to ‘0’, the base station shall omit this field; otherwise, the base station shall include this field and set it as follows:

The base station shall set this field to ‘0’ to command the mobile station not to update the encryption key and integrity key. The base station shall set this field to ‘1’ to command the mobile station to update the encryption key and integrity key to the latest being generated.

USE_UAK – Use UAK indicator

If MSG_INT_INFO_INCL is set to ‘0’, the base station shall omit this field; otherwise, the base station shall include this field and set it as follows:

If the base station receives an authentication vector with a UAK, the base station shall set this field to ‘1’ to indicate that the mobile station is to use UMAC; otherwise, the base station shall set this field to ‘0’ to indicate that the mobile station is to use MAC-I.

PLCM_TYPE_INCL - The Public Long Code Mask type included indicator.

The base station shall set this field to ‘1’ if the base station include PLCM_TYPE in the message; otherwise, the base station shall set this field to ‘0’.

PLCM_TYPE - The Public Long Code Mask type indicator.

If PLCM_TYPE_INCL is set to ‘0’, the base station shall omit this field; otherwise, the base station shall include this field and set it as follows.

The base station shall set this field to the corresponding Public Long Code Mask type as specified in Table 3.7.2.3.2.21-5.

PLCM_TYPE ‘0010’ shall not be used when the mobile station is not in its home country (i.e., the MCC of the mobile station is different from the MCC of this base station).

PLCM_TYPE ‘0011’ shall not be used when the mobile station is not in its home network (i.e., the MCC or MNC of the mobile station is different from the MCC or MNC of this base station).

PLCM_39 - The 39 LSB bits of the Public Long Code Mask.

If PLCM_TYPE is not set to ‘0001’, the base station shall omit this field; otherwise, the base station shall include this field and set it to the 39 least significant bits of the public long code mask as defined in 3.6.4.1.10.

SYNC_ID_INCL - Service Configuration synchronization identifier included indicator.

The base station shall omit this field if the GRANTED_MODE field is not set to ’11’; otherwise, the base station shall include this field and set it as follows:

If the mobile station is to use a stored service configuration corresponding to SYNC_ID field included in this message, the base station shall set this field to ‘1’, otherwise, the base station shall set this field to ‘0’.

SYNC_ID_LEN - Service Configuration synchronization identifier length indicator.

If the SYNC_ID_INCL field is not included or is included and is set to ‘0’, the base station shall omit this field; otherwise the base station shall include this field and set it as follows:

The base station shall set this field to the length of the SYNC_ID field included in this message.

SYNC_ID - Service Configuration synchronization identifier.

If the SYNC_ID_INCL field is not included or is included and is set to ‘0’, the base station shall omit this field; otherwise, the base station shall include this field and set it as follows:

The base station shall set this field to the Service Configuration synchronization identifier corresponding to the stored service configuration that the mobile station is to use.

CONFIG_MSG_SEQ - Configuration message sequence number.

If the DIRECT_CH_ASSIGN_IND is to ‘0’, the base station shall omit this field; otherwise the base station shall include this field and set it as follows:

The base station shall set this field to CONFIG_SEQ (see 3.6.2.2).

RTC_NOM_PWR - Reverse Traffic Channel Nominal Power.

If DIRECT_CH_ASSIGN_IND is set to ‘0’, the base station shall omit this field; otherwise, the base station shall include this field and set it as follows:

The base station shall set this field to the value of the nominal power correction to be used by the mobile station when transmitting on the Reverse Traffic Channel after the Direct Channel Assignment call setup procedure as specified in 2.6.4.2. The base station shall set this field as a two’s complement signed binary number, in units of 1 dB.

RESPOND_IND - Response requested indicator.

If DIRECT_CH_ASSIGN_IND is set to ‘0’, the base station shall omit this field; otherwise, the base station shall include this field and set it as follows:

The base station shall set this field to ‘1’ if the mobile station is to respond to the *Extended Channel Assignment Message* with a *Page Response Message* or *Reconnect Message* in unassured mode on the r-csch; otherwise, the base station shall set this field to ‘0’ to indicate that the mobile station is not to respond on the r-csch.

DIRECT_CH_ASSIGN_RECOVER_IND - Direct Channel Assignment Recover Indicator

If DIRECT_CH_ASSIGN_IND is set to ‘0’, the base station shall omit this field; otherwise, the base station shall include this field and set it as follows:

The base station shall set this field to ‘1’ if the mobile station is to transmit a *Page Response Message* or a *Reconnect Message* after failing to acquire the forward traffic channel assigned in this message; otherwise, the base station shall set this field to ‘0’.

FIXED_PREAMBLE_TRANSMIT_IND - Fixed Preamble Length Transmission Indicator.

If GRANTED_MODE is not set to ‘11’, the base station shall omit this field; otherwise, the base station shall include this field and set it as follows:

The base station shall set this field to ‘1’ to indicate if the mobile station is allowed to enter the *Traffic Channel Substate* of the *Mobile Station Control on the Traffic Channel State* after sending the number of preambles specified in this message; otherwise the base station shall set this field to ‘0’.

If any channel assigned by this message is to use Radio Configuration 1 or 2 (see [2]), then the base station shall set this field to ‘0’.

FIXED_NUM_PREAMBLE - Traffic Channel preamble length.

If FIXED_PREAMBLE_TRANSMIT_IND is not included, or is included and set to '0', the base station shall omit this field; otherwise, the base station shall include this field and set it to the minimum length of Traffic Channel preamble that the mobile station is to transmit, before entering the *Traffic Channel Substate* of the *Mobile Station Control on the Traffic Channel State* without having received a *forward dedicated channel acquired* indication from Layer 2 (see [4]).

The base station shall set FIXED_NUM_PREAMBLE to the value shown in Table 3.7.2.3.2.21-13 corresponding to the Traffic Channel preamble length in ms.

Table 3.7.2.3.2.21-13 Traffic Channel Preamble Length

FIXED_NUM_ PREAMBLE (binary)	Preamble Length in ms
000	0
001	20
010	40
011	60
100	80
101	100
110	200
111	300

EARLY_RL_TRANSMIT_IND - Early Reverse Link Transmission indicator.

The base station shall set this field to '1' if, upon channel assignment, the mobile station is to enable the transmitter prior to receiving sufficient signal quality on the forward link; otherwise, the base station shall set this field to '0'.

TX_PWR_LIMIT_INCL - Transmit Power Limit Inclusion for the current base station

If the transmit power limit field is included in this message, the base station shall set this field to '1'; otherwise, the base station shall set this field to '0'.

TX_PWR_LIMIT - Transmit Power Limit for the current base station

If TX_PWR_LIMIT_INCL is set to '0', the base station shall omit this field; otherwise, the base station shall include this field and set to as follows.

The base station shall set this field to thirty dB more than transmit power limit in dBm EIRP, in steps of 1 dB. This field can take the values 30 to 53 corresponding to maximum transmit power values 0 dBm to 23 dBm.

RESERVED - Reserved bits.

The base station shall set all the bits of this field to '0' to make the entire record octet-aligned.

If the CH_IND field is set to '01', the base station shall include the following fields:

FPC_FCH_INIT_SETPT - Initial Fundamental Channel outer loop E_b/N_t setpoint.

The base station shall set this field to initial Fundamental Channel outer loop E_b/N_t setpoint, in units of 0.125 dB.

FPC_FCH_FER - Fundamental Channel target Frame Error Rate.

The base station shall set this field to the target Frame Error Rate on the Forward Fundamental Channel, as specified in Table 3.7.3.3.2.25-2.

FPC_FCH_MIN_SETPT - Minimum Fundamental Channel Outer Loop E_b/N_t setpoint.

The base station shall set this field to minimum Fundamental Channel Outer Loop E_b/N_t setpoint, in units of 0.125 dB.

FPC_FCH_MAX_SETPT - Maximum Fundamental Channel Outer Loop E_b/N_t setpoint.

The base station shall set this field to maximum Fundamental Channel Outer Loop E_b/N_t setpoint, in units of 0.125 dB.

The base station shall include NUM_PILOTS plus one occurrences of the following record, one for each member of the mobile station's Active Set on the Traffic Channel.

PILOT_PN - Pilot PN sequence offset index.

The base station shall set this field to the pilot PN sequence offset for this pilot in units of 64 PN chips.

ADD_PILOT_REC_INCL - Additional pilot information included indicator.

The base station shall set this field to '1' if additional pilot information listed in PILOT_REC_TYPE and RECORD_LEN fields are included. The base station shall set this field to '0' if the corresponding pilot is the common pilot and there is no additional pilot information included.

PILOT_REC_TYPE - Pilot record type.

If ADD_PILOT_REC_INCL is set to '1', the base station shall set this field to the PILOT_REC_TYPE value shown in Table 3.7.2.3.2.21-9 corresponding to the type of Pilot Record specified by this record.

If ADD_PILOT_REC_INCL is set to '0', the base station shall omit this field.

Table 3.7.2.3.2.21-9. Pilot Record Types

Description	PILOT_REC_TYPE (binary)
1X Common Pilot with Transmit Diversity	000
1X Auxiliary Pilot	001
1X Auxiliary Pilot with Transmit Diversity	010
3X Common Pilot	011
3X Auxiliary Pilot	100
All other PILOT_REC_TYPE values are reserved	

RECORD_LEN - Pilot record length.

If ADD_PILOT_REC_INCL is set to '1', the base station shall set this field to the number of octets in the type-specific fields of this pilot record.

If ADD_PILOT_REC_INCL is set to '0', the base station shall omit this field.

Type-specific fields - Pilot record type-specific fields.

If ADD_PILOT_REC_INCL is set to '1', the base station shall include type-specific fields based on the PILOT_REC_TYPE of this pilot record as described in 3.7.6.1.

If ADD_PILOT_REC_INCL is set to '0', the base station shall omit this field.

PWR_COMB_IND - Power control symbol combining indicator.

If the Forward Fundamental Traffic Channel associated with this pilot will carry the same closed-loop power control subchannel bits as that of the previous pilot in this message, the base station shall set this field to '1'; otherwise, the base station shall set this field to '0'. For the first occurrence of this record in the message, the base station shall set this field to '0'.

CODE_CHAN_FCH - Code channel index for the Fundamental Channel.

If FOR_RC is set to a Radio Configuration associated with Spreading Rate 1, the base station shall set this field to the code channel index (see [2]) that the mobile station is to use on the Forward Fundamental Channel associated with this pilot. If FOR_RC is set to a Radio Configuration associated with Spreading Rate 3, the base station shall set this field to the code channel index that the mobile station is to use on the Forward Fundamental on the center SR3 frequency.

If Radio Configuration 1, 2, 3, or 5 (see [2]) is used, the base station shall set this field in the range 1 to 63 inclusive. If Radio Configuration 4, 6, 8, 11, or 12 is used, the base station shall set this field in the range 1 to 127 inclusive. If Radio Configuration 7 or 9 is used, the base station shall set this field in the range 1 to 255 inclusive.

QOF_MASK_ID_FCH - Quasi-Orthogonal Function Mask Identifier for the Fundamental Channel.

If FOR_RC is set to a Radio Configuration associated with Spreading Rate 1, the base station shall set this field to the quasi-orthogonal function mask identifier (see [2]) that the mobile station is to use on the Forward Fundamental Channel associated with this pilot. If FOR_RC is set to a Radio Configuration associated with Spreading Rate 3, the base station shall set this field to the quasi-orthogonal function mask identifier that the mobile station is to use on the Forward Fundamental Channel on the center SR3 frequency.

3X_FCH_INFO_INCL – 3X Fundamental Channel information included indicator.

If the 3X Fundamental Channel information is included, the base station shall set this field to ‘1’; otherwise, the base station shall set this field to ‘0’.

The base station shall include NUM_PILOTS plus one occurrences of the following record if 3X_FCH_INFO_INCL is set to ‘1’. The base station shall use the same order for the following fields as is used for the PILOT_PN fields listed in this message.

3X_FCH_LOW_INCL – FCH code channel on the lowest SR3 frequency included indicator.

If the Fundamental Channel on the lowest SR3 frequency has a different code channel than the Fundamental Channel on the center SR3 frequency, the base station shall set this field to ‘1’; otherwise, the base station shall set this field to ‘0’.

QOF_MASK_ID_FCH_LOW – QOF index for the Fundamental Channel on the lowest SR3 frequency.

If 3X_FCH_LOW_INCL is set to ‘0’, the base station shall omit this field; otherwise, the base station shall set this field as follows:

The base station shall set this field to the index of the Quasi-orthogonal function (see [2]) corresponding to the QOF index for the Fundamental Channel on the lowest SR3 frequency.

CODE_CHAN_FCH_LOW - Code channel for the Fundamental Channel on the lowest SR3 frequency.

If 3X_FCH_LOW_INCL is set to ‘0’, the base station shall omit this field; otherwise, the base station shall set this field as follows:

The base station shall set this field to the code channel index (see [2]) that the mobile station is to use on the Fundamental Channel on the lowest SR3 frequency. If Radio Configuration 6 or 8 is used, the base station shall set this field in the range 1 to 127 inclusive. If Radio Configuration 7 or 9 is used, the base station shall set this field in the range 1 to 255 inclusive.

3X_FCH_HIGH_INCL – FCH code channel on the highest SR3 frequency included indicator.

If the Fundamental Channel on the highest SR3 frequency has a different code channel than the Fundamental Channel on the center SR3 frequency, the base station shall set this field to '1'; otherwise, the base station shall set this field to '0'.

QOF_MASK_ID_FCH_HIGH – QOF index for the Fundamental Channel on the highest SR3 frequency.

If 3X_FCH_HIGH_INCL is set to '0', the base station shall omit this field; otherwise, the base station shall set this field as follows:

The base station shall set this field to the index of the Quasi-orthogonal function (see [2] corresponding to the QOF index for the Fundamental Channel on the highest SR3 frequency.

CODE_CHAN_FCH_HIGH – Code channel for the Fundamental Channel on the highest SR3 frequency.

If 3X_FCH_HIGH_INCL is set to '0', the base station shall omit this field; otherwise, the base station shall set this field as follows:

The base station shall set this field to the code channel index (see [2]) that the mobile station is to use on the Fundamental Channel on the highest SR3 frequency. If Radio Configuration 6 or 8 is used, the base station shall set this field in the range 1 to 127 inclusive. If Radio Configuration 7 or 9 is used, the base station shall set this field in the range 1 to 255 inclusive.

RESERVED - Reserved bits.

The base station shall add reserved bits as needed in order to make the total length of the fields after the preceding CH_RECORD_LEN field through this RESERVED field equal to an integer number of octets. The base station shall set these bits to '0'.

If the CH_IND field is set to '10', the base station shall include the following fields:

FPC_DCCH_INIT_SETPT - Initial Dedicated Control Channel outer loop E_b/N_t setpoint.

The base station shall set this field to initial Dedicated Control Channel outer loop E_b/N_t setpoint, in units of 0.125 dB.

FPC_DCCH_FER - Dedicated Control Channel target Frame Error Rate.

The base station shall set this field to the target Frame Error Rate on the Dedicated Control Channel, as specified in Table 3.7.3.3.2.25-2.

FPC_DCCH_MIN_SETPT - Minimum Dedicated Control Channel Outer Loop E_b/N_t setpoint.

The base station shall set this field to minimum Dedicated Control Channel Outer Loop E_b/N_t setpoint, in units of 0.125 dB.

FPC_DCCH_MAX_SETPT - Maximum Dedicated Control Channel Outer Loop E_b/N_t setpoint.

The base station shall set this field to maximum Dedicated Control Channel Outer Loop E_b/N_t setpoint, in units of 0.125 dB.

The base station shall include NUM_PILOTS plus one occurrences of the following three-field record for each member of the mobile station's Active Set on the Traffic Channel.

PILOT_PN - Pilot PN sequence offset index.

The base station shall set this field to the pilot PN sequence offset for this pilot in units of 64 PN chips.

ADD_PILOT_REC_INCL - Additional pilot information included indicator.

The base station shall set this field to '1' if additional pilot information listed in PILOT_REC_TYPE and RECORD_LEN fields are included. The base station shall set this field to '0' if the corresponding pilot is the common pilot and there is no additional pilot information included.

PILOT_REC_TYPE - Pilot record type.

If ADD_PILOT_REC_INCL is set to '1', the base station shall set this field to the PILOT_REC_TYPE value shown in Table 3.7.2.3.2.21-9 corresponding to the type of Pilot Record specified by this record.

If ADD_PILOT_REC_INCL is set to '0', the base station shall omit this field.

RECORD_LEN - Pilot record length.

If ADD_PILOT_REC_INCL is set to '1', the base station shall set this field to the number of octets in the type-specific fields of this pilot record.

If ADD_PILOT_REC_INCL is set to '0', the base station shall omit this field.

Type-specific fields - Pilot record type-specific fields.

If ADD_PILOT_REC_INCL is set to '1', the base station shall include type-specific fields based on the PILOT_REC_TYPE of this pilot record.

If ADD_PILOT_REC_INCL is set to '0', the base station shall omit this field as described in 3.7.6.1.

PWR_COMB_IND - Power control symbol combining indicator.

If this pilot will carry the same closed-loop power control subchannel bits as that of the previous pilot in this message, the base station shall set this field to '1'; otherwise, the base station shall set this field to '0'. The base station shall set this field to '0' in the first record in the pilot list.

CODE_CHAN_DCCH - Code channel index for the Dedicated Control Channel.

If FOR_RC is set to a Radio Configuration associated with Spreading Rate 1, the base station shall set this field to the code channel index (see [2]), in the range of 1 to 127 inclusive, that the mobile station is to use on the Forward Dedicated Control Channel associated with this pilot. If FOR_RC is set to a Radio Configuration associated with Spreading Rate 3, the base station shall set this field to the code channel index in the range of 1 to 255 inclusive, that the mobile station is to use on the Forward Dedicated Control Channel on the center SR3 frequency.

If Radio Configuration 3 or 5 (see [2]) is used, the base station shall set this field in the range 1 to 63 inclusive. If Radio Configuration 4, 6 or 8 is used, the base station shall set this field in the range 1 to 127 inclusive. If Radio Configuration 7 or 9 is used, the base station shall set this field in the range 1 to 255 inclusive.

QOF_MASK_ID_DCCH - Quasi-Orthogonal Function Mask Identifier for the Dedicated Control Channel.

If FOR_RC is set to a Radio Configuration associated with Spreading Rate 1, the base station shall set this field to the quasi-orthogonal function mask identifier (see [2]) that the mobile station is to use on the Forward Dedicated Control Channel associated with this pilot. If FOR_RC is set to a Radio Configuration associated with Spreading Rate 3, the base station shall set this field to the quasi-orthogonal function mask identifier (see [2]) that the mobile station is to use on the Forward Dedicated Control Channel on the center SR3 frequency.

3X_DCCH_INFO_INCL – 3X Dedicated Control Channel information included indicator.

If the 3X Dedicated Control Channel information is included, the base station shall set this field to '1'; otherwise, the base station shall set this field to '0'.

The base station shall include NUM_PILOTS plus one occurrences of the following record if 3X_DCCH_INFO_INCL is set to '1'. The base station shall use the same order for the following fields as is used for the PILOT_PN fields listed in this message.

3X_DCCH_LOW_INCL – DCCH code channel on the lowest SR3 frequency included indicator.

If the Dedicated Control Channel on the lowest SR3 frequencies has a different code channel than the Dedicated Control Channel on the center SR3 frequency, the base station shall set this field to '1'; otherwise, the base station shall set this field to '0'.

QOF_MASK_ID_DCCH_LOW – QOF index for the Dedicated Control Channel on the lowest SR3 frequency.

If 3X_DCCH_LOW_INCL is set to '0', the base station shall omit this field; otherwise, the base station shall set this field as follows:

The base station shall set this field to the index of the Quasi-orthogonal function (see [2]) corresponding to the QOF index for the Dedicated Control Channel on the lowest SR3 frequency.

CODE_CHAN_DCCH_LOW - Code channel for the Dedicated Control Channel on the lowest SR3 frequency.

If 3X_DCCH_LOW_INCL is set to '0', the base station shall omit this field; otherwise, the base station shall set this field as follows:

The base station shall set this field to the code channel index (see [2]) that the mobile station is to use on the Dedicated Control Channel on the lowest SR3 frequency. If Radio Configuration 6 or 8 is used, the base station shall set this field in the range 1 to 127 inclusive. If Radio Configuration 7 or 9 is used, the base station shall set this field in the range 1 to 255 inclusive.

3X_DCCH_HIGH_INCL – DCCH code channel on the highest SR3 frequency included indicator.

If the Dedicated Control Channel on the highest SR3 frequencies has a different code channel than the Dedicated Control Channel on the center SR3 frequency, the base station shall set this field to '1'; otherwise, the base station shall set this field to '0'.

QOF_MASK_ID_DCCH_HIGH – QOF index for the Dedicated Control Channel on the highest SR3 frequency.

If 3X_DCCH_HIGH_INCL is set to '0', the base station shall omit this field; otherwise, the base station shall set this field as follows:

The base station shall set this field to the index of the Quasi-orthogonal function (see [2]) corresponding to the QOF index for the Dedicated Control Channel on the highest SR3 frequency.

CODE_CHAN_DCCH_HIGH – Code channel for the Dedicated Control Channel on the highest SR3 frequency.

If 3X_DCCH_HIGH_INCL is set to '0', the base station shall omit this field; otherwise, the base station shall set this field as follows:

The base station shall set this field to the code channel index (see [2]) that the mobile station is to use on the Dedicated Control Channel on the highest SR3 frequency. If Radio Configuration 6 or 8 is used, the base station shall set this field in the range 1 to 127 inclusive. If Radio Configuration 7 or 9 is used, the base station shall set this field in the range 1 to 255 inclusive.

FUNDICATED_BCMC_IND – BCMC on fundicated channel Indicator.

If the channel assignment in this message contains a Forward Fundicated Channel used for BCMC transmission, the base station shall set this field to '1'; otherwise, the base station shall set this field to '0'.

If FUNDICATED_BCMC_IND is set to '1', the base station shall include NUM_PILOT plus 1 occurrences of the following record:

FOR_CPCCH_WALSH - The Forward Common Power Control Channel Walsh code assignment.

The base station shall set this field to the Walsh code assignment for the Forward Common Power Control Channel.

FOR_CPCSCH - The Forward Common Power Control Channel Subchannel.

The base station shall set this field to the Forward Common Power Control Channel Subchannel associated with this base station.

RESERVED - Reserved bits.

The base station shall add reserved bits as needed in order to make the total length of the fields after the preceding CH_RECORD_LEN field through this RESERVED field equal to an integer number of octets. The base station shall set these bits to '0'.

If the CH_IND field is set to '11', the base station shall include the following fields:

FPC_FCH_INIT_SETPT - Initial Fundamental Channel outer loop E_b/N_t setpoint.

The base station shall set this field to initial Fundamental Channel outer loop E_b/N_t setpoint, in units of 0.125 dB.

FPC_DCCH_INIT_SETPT - Initial Dedicated Control Channel outer loop E_b/N_t setpoint.

The base station shall set this field to initial Dedicated Control Channel outer loop E_b/N_t setpoint, in units of 0.125 dB.

FPC_PRI_CHAN - Power Control Subchannel indicator.

The base station shall set this field to '0' if the mobile station is to perform the primary inner loop estimation on the received Forward Fundamental Channel. The base station shall set this field to '1' if the mobile station is to perform the primary inner loop estimation on the received Forward Dedicated Control Channel.

If the F-CPCCH is assigned, the base station shall multiplex the Power Control Subchannel on the F-CPCCH; otherwise:

If this field is set to '0', the base station shall multiplex the Power Control Subchannel on the Forward Fundamental Channel; otherwise, the base station shall multiplex the Power Control Subchannel on the Forward Dedicated Control Channel.

FPC_FCH_FER - Fundamental Channel target Frame Error Rate.

The base station shall set this field to the target Frame Error Rate on the Forward Fundamental Channel.

FPC_FCH_MIN_SETPT - Minimum Fundamental Channel Outer Loop E_b/N_t setpoint.

The base station shall set this field to minimum Fundamental Channel Outer Loop E_b/N_t setpoint, in units of 0.125 dB.

FPC_FCH_MAX_SETPT - Maximum Fundamental Channel Outer Loop E_b/N_t setpoint.

The base station shall set this field to maximum Fundamental Channel Outer Loop E_b/N_t setpoint, in units of 0.125 dB.

FPC_DCCH_FER - Dedicated Control Channel target Frame Error Rate.

The base station shall set this field to the target Frame Error Rate on the Dedicated Control Channel.

FPC_DCCH_MIN_SETPT - Minimum Dedicated Control Channel Outer Loop E_b/N_t setpoint.

The base station shall set this field to minimum Dedicated Control Channel Outer Loop E_b/N_t setpoint, in units of 0.125 dB.

FPC_DCCH_MAX_SETPT - Maximum Dedicated Control Channel Outer Loop E_b/N_t setpoint.

The base station shall set this field to maximum Dedicated Control Channel Outer Loop E_b/N_t setpoint, in units of 0.125 dB.

The base station shall include NUM_PILOTS plus one occurrences of the following three-field record, one for each member of the mobile station's Active Set on the Traffic Channel.

PILOT_PN - Pilot PN sequence offset index.

The base station shall set this field to the pilot PN sequence offset for this pilot in units of 64 PN chips.

ADD_PILOT_REC_INCL - Additional pilot information included indicator.

The base station shall set this field to '1' if additional pilot information listed in PILOT_REC_TYPE and RECORD_LEN fields are included. The base station shall set this field to '0' if the corresponding pilot is the common pilot and there is no additional pilot information included.

PILOT_REC_TYPE - Pilot record type.

If ADD_PILOT_REC_INCL is set to '1', the base station shall set this field to the PILOT_REC_TYPE value shown in Table 3.7.2.3.2.21-9 corresponding to the type of Pilot Record specified by this record.

If ADD_PILOT_REC_INCL is set to '0', the base station shall omit this field.

RECORD_LEN - Pilot record length.

If ADD_PILOT_REC_INCL is set to '1', the base station shall set this field to the number of octets in the type-specific fields of this pilot record.

If ADD_PILOT_REC_INCL is set to '0', the base station shall omit this field.

Type-specific fields - Pilot record type-specific fields.

If ADD_PILOT_REC_INCL is set to '1', the base station shall include type-specific fields based on the PILOT_REC_TYPE of this pilot record as described in 3.7.6.1.

If ADD_PILOT_REC_INCL is set to '0', the base station shall omit this field.

PWR_COMB_IND - Power control symbol combining indicator.

If this pilot will carry the same closed-loop power control subchannel bits as that of the previous pilot in this message, the base station shall set this field to '1'; otherwise, the base station shall set this field to '0'. The base station shall set this field to '0' in the first record in the pilot list.

CODE_CHAN_FCH - Code channel index for the Fundamental Channel.

If FOR_RC is set to a Radio Configuration associated with Spreading Rate 1, the base station shall set this field to the code channel index (see [2]) that the mobile station is to use on the Forward Channel associated with this pilot. If FOR_RC is set to a Radio Configuration associated with Spreading Rate 3, the base station shall set this field to the code channel index that the mobile station is to use on the Forward Channel on the center SR3 frequency.

If Radio Configuration 1, 2, 3, or 5 (see [2]) is used, the base station shall set this field in the range 1 to 63 inclusive. If Radio Configuration 4, 6, 8, 11, or 12 is used, the base station shall set this field in the range 1 to 127 inclusive. If Radio Configuration 7 or 9 is used, the base station shall set this field in the range 1 to 255 inclusive.

QOF_MASK_ID_FCH - Quasi-Orthogonal Function Mask Identifier for the Fundamental Channel.

If FOR_RC is set to a Radio Configuration associated with Spreading Rate 1, the base station shall set this field to the quasi-orthogonal function mask identifier (see [2]) that the mobile station is to use on the Forward Fundamental Channel associated with this pilot. If FOR_RC is set to a Radio Configuration associated with Spreading Rate 3, the base station shall set this field to the quasi-orthogonal function mask identifier that the mobile station is to use on the Forward Fundamental Channel on the center SR3 frequency.

CODE_CHAN_DCCH - Code channel index for the Dedicated Control Channel.

If FOR_RC is set to a Radio Configuration associated with Spreading Rate 1, the base station shall set this field to the code channel index (see [2]), in the range of 1 to 127 inclusive, that the mobile station is to use on the Dedicated Control Channel associated with this pilot. If FOR_RC is set to a Radio Configuration associated with Spreading Rate 3, the base station shall set this field to the code channel index in the range of 1 to 255 inclusive, that the mobile station is to use on the Dedicated Control Channel on the center SR3 frequency.

If Radio Configuration 3 or 5 (see [2]) is used, the base station shall set this field in the range 1 to 63 inclusive. If Radio Configuration 4, 6 or 8 is used, the base station shall set this field in the range 1 to 127 inclusive. If Radio Configuration 7 or 9 is used, the base station shall set this field in the range 1 to 255 inclusive.

QOF_MASK_ID_DCCH - Quasi-Orthogonal Function Mask Identifier for the Dedicated Control Channel.

If FOR_RC is set to a Radio Configuration associated with Spreading Rate 1, the base station shall set this field to the quasi-orthogonal function mask identifier (see [2]) that the mobile station is to use on the Forward Dedicated Control Channel associated with this pilot. If FOR_RC is set to a Radio Configuration associated with Spreading Rate 1, the base station shall set this field to the quasi-orthogonal function mask identifier that the mobile station is to use on the Forward Dedicated Control Channel on the center SR3 frequency.

3X_FCH_INFO_INCL – 3X Fundamental Channel information included indicator.

If the 3X Fundamental Channel information is included, the base station shall set this field to ‘1’; otherwise, the base station shall set this field to ‘0’.

The base station shall include NUM_PILOTS plus one occurrences of the following record if 3X_FCH_INFO_INCL is set to ‘1’. The base station shall use the same order for the following fields as is used for the PILOT_PN fields listed in this message.

3X_FCH_LOW_INCL – FCH code channel on the lowest SR3 frequency included indicator.

If the Fundamental Channel on the lowest SR3 frequencies has a different code channel than the Fundamental Channel on the center SR3 frequency, the base station shall set this field to '1'; otherwise, the base station shall set this field to '0'.

QOF_MASK_ID_FCH_LOW – QOF index for the Fundamental Channel on the lowest SR3 frequency.

If 3X_FCH_LOW_INCL is set to '0', the base station shall omit this field; otherwise, the base station shall set this field as follows:

The base station shall set this field to the index of the Quasi-orthogonal function (see [2]) corresponding to the QOF index for the Fundamental Channel on the lowest SR3 frequency.

CODE_CHAN_FCH_LOW - Code channel for the Fundamental Channel on the lowest SR3 frequency.

If 3X_FCH_LOW_INCL is set to '0', the base station shall omit this field; otherwise, the base station shall set this field as follows:

The base station shall set this field to the code channel index (see [2]) that the mobile station is to use on the Fundamental Channel on the lowest SR3 frequency. If Radio Configuration 6 or 8 is used, the base station shall set this field in the range 1 to 127 inclusive. If Radio Configuration 7 or 9 is used, the base station shall set this field in the range 1 to 255 inclusive.

3X_FCH_HIGH_INCL – FCH code channel on the highest SR3 frequency included indicator.

If the Fundamental Channel on the highest SR3 frequencies has a different code channel than the Fundamental Channel on the center SR3 frequency, the base station shall set this field to '1'; otherwise, the base station shall set this field to '0'.

QOF_MASK_ID_FCH_HIGH – QOF index for the Fundamental Channel on the highest SR3 frequency.

If 3X_FCH_HIGH_INCL is set to '0', the base station shall omit this field; otherwise, the base station shall set this field as follows:

The base station shall set this field to the index of the Quasi-orthogonal function (see [2] corresponding to the QOF index for the Fundamental Channel on the highest SR3 frequency.

CODE_CHAN_FCH_HIGH – Code channel for the Fundamental Channel on the highest SR3 frequency.

If 3X_FCH_HIGH_INCL is set to '0', the base station shall omit this field; otherwise, the base station shall set this field as follows:

The base station shall set this field to the code channel index (see [2]) that the mobile station is to use on the Fundamental Channel on the highest SR3 frequency. If Radio Configuration 6 or 8 is used, the base station shall set this field in the range 1 to 127 inclusive. If Radio Configuration 7 or 9 is used, the base station shall set this field in the range 1 to 255 inclusive.

3X_DCCH_INFO_INCL – 3X Dedicated Control Channel information included indicator.

If the 3X Dedicated Control Channel information is included, the base station shall set this field to '1'; otherwise, the base station shall set this field to '0'.

The base station shall include NUM_PILOTS plus one occurrences of the following record if 3X_DCCH_INFO_INCL is set to '1'. The base station shall use the same order for the following fields as is used for the PILOT_PN fields listed in this message.

3X_DCCH_LOW_INCL – DCCH code channel on the lowest SR3 frequency included indicator.

If the Dedicated Control Channel on the lowest SR3 frequencies has a different code channel than the Dedicated Control Channel on the center SR3 frequency, the base station shall set this field to '1'; otherwise, the base station shall set this field to '0'.

QOF_MASK_ID_DCCH_LOW – QOF index for the Dedicated Control Channel on the lowest SR3 frequency.

If 3X_DCCH_LOW_INCL is set to '0', the base station shall omit this field; otherwise, the base station shall set this field as follows:

The base station shall set this field to the index of the Quasi-orthogonal function (see [2]) corresponding to the QOF index for the Dedicated Control Channel on the lowest SR3 frequency.

CODE_CHAN_DCCH_LOW - Code channel for the Dedicated Control Channel on the lowest SR3 frequency.

If 3X_DCCH_LOW_INCL is set to '0', the base station shall omit this field; otherwise, the base station shall set this field as follows:

The base station shall set this field to the code channel index (see [2]) that the mobile station is to use on the Dedicated Control Channel on the lowest SR3 frequency. If Radio Configuration 6 or 8 is used, the base station shall set this field in the range 1 to 127 inclusive. If Radio Configuration 7 or 9 is used, the base station shall set this field in the range 1 to 255 inclusive.

3X_DCCH_HIGH_INCL – DCCH code channel on the highest SR3 frequency included indicator.

If the Dedicated Control Channel on the highest SR3 frequencies has a different code channel than the Dedicated Control Channel on the center SR3 frequency, the base station shall set this field to '1'; otherwise, the base station shall set this field to '0'.

QOF_MASK_ID_DCCH_HIGH– QOF index for the Dedicated Control Channel on the highest SR3 frequency.

If 3X_DCCH_HIGH_INCL is set to '0', the base station shall omit this field; otherwise, the base station shall set this field as follows:

The base station shall set this field to the index of the Quasi-orthogonal function (see [2]) corresponding to the QOF index for the Dedicated Control Channel on the highest SR3 frequency.

CODE_CHAN_DCCH_HIGH – Code channel for the Dedicated Control Channel on the highest SR3 frequency.

If 3X_DCCH_HIGH_INCL is set to '0', the base station shall omit this field; otherwise, the base station shall set this field as follows:

The base station shall set this field to the code channel index (see [2]) that the mobile station is to use on the Dedicated Control Channel on the highest SR3 frequency. If Radio Configuration 6 or 8 is used, the base station shall set this field in the range 1 to 127 inclusive. If Radio Configuration 7 or 9 is used, the base station shall set this field in the range 1 to 255 inclusive.

FUNDICATED_BCMC_IND – BCMC on fundicated channel Indicator.

If the channel assignment in this message contains a Forward Fundicated Channel used for BCMC transmission, the base station shall set this field to '1'; otherwise, the base station shall set this field to '0'.

REV_FCH_ASSIGNED – Reverse FCH channel assigned indicator.

If the FUNDICATED_BCMC_IND field is set to '0', the base station shall omit this field; otherwise, the base station shall include this field and set it as follows:

If the reverse FCH is assigned in this message, the base station shall set this field to '1'; otherwise, the base station shall set this field to '0'.

ADD_PLCM_FOR_FCH_INCL – Additional PLCM for forward FCH included indicator.

If the FUNDICATED_BCMC_IND field is set to '0', the base station shall omit this field; otherwise, the base station shall include this field and set it as follows:

If the additional PLCM for forward FCH is included in this message, the base station shall set this field to '1'; otherwise, the base station shall set this field to '0'.

ADD_PLCM_FOR_FCH_TYPE - The Additional Public Long Code Mask for forward FCH type indicator.

If ADD_PLCM_FOR_FCH_INCL is not included or is included and is set to '0', the base station shall omit this field; otherwise, the base station shall include this field and set it as follows.

The base station shall set this field to '1' to indicate PLCM specified by the base station. The field value '0' is reserved.

ADD_PLCM_FOR_FCH_39 - The 39 LSB bits of the additional Public Long Code Mask for forward FCH.

If ADD_PLCM_FOR_FCH_TYPE field is included and is set to '1', the base station shall include this field and set it to the 39 least significant bits of the public long code mask used by the mobile station; otherwise, the base station shall omit this field.

FOR_CPCCH_INFO_INCL – CPCCH information included indicator.

If the FUNDICATED_BCMC_IND field is set to '0', the base station shall omit this field; otherwise, the base station shall include this field and set it as follows:

If the F-CPCCH information is included in this message, the base station shall set this field to '1'; otherwise, the base station shall set this field to '0'.

If FOR_CPCCH_INFO_INCL field is included and is set to '1', the base station shall include NUM_PILOT plus one occurrences of the following record:

FOR_CPCCH_WALSH - The Forward Common Power Control Channel Walsh code assignment.

The base station shall set this field to the Walsh code assignment for the Forward Common Power Control Channel.

FOR_CPCSCH - The Forward Common Power Control Channel Subchannel.

The base station shall set this field to the Forward Common Power Control Channel Subchannel associated with this base station.

RESERVED - Reserved bits.

The base station shall add reserved bits as needed in order to make the total length of the fields after the preceding CH_RECORD_LEN field through this RESERVED field equal to an integer number of octets. The base station shall set these bits to '0'.

If the ASSIGN_MODE field is set to '101', the base station shall include the following fields:

FREQ_INCL - Frequency included indicator.

If the BAND_CLASS and CDMA_FREQ fields are included in this assignment record, the base station shall set this bit to '1'. If the BAND_CLASS and CDMA_FREQ fields are not included in this assignment record, the base station shall set this bit to '0'.

BAND_CLASS - Band class.

If the FREQ_INCL bit is set to '1', the base station shall set this field to the CDMA band class, as specified in [30], corresponding to the CDMA frequency assignment for the CDMA Channel containing the Forward Traffic Channel(s) the mobile station is to use. If the FREQ_INCL bit is set to '0', the base station shall omit this field.

CDMA_FREQ - Frequency assignment.

If the FREQ_INCL bit is set to '0', the base station shall omit this field; otherwise, the base station shall set this field as follows:

If the FREQ_INCL bit is set to '1', the base station shall set this field to the CDMA Channel number, in the specified CDMA band class, corresponding to the CDMA frequency assignment for the CDMA Channel containing the Forward Traffic Channel(s) the mobile station is to use.

BYPASS_ALERT_ANSWER - Bypass alert indicator.

If the mobile station is to bypass the *Waiting for Order Substate* and the *Waiting for Mobile Station Answer Substate*, the base station shall set this field to '1'; otherwise, the base station shall set this field to '0'.

GRANTED_MODE - Granted mode.

The base station shall set this field to '01' to indicate that the mobile station is to use an initial service configuration consisting of the default multiplex option that is derived from the radio configuration corresponding to Table 3.7.2.3.2.21-3, and to indicate that service negotiation may take place before the base station sends one of the following messages: *Service Connect Message*, *General Handoff Direction Message* (with SCR) or *Universal Handoff Direction Message* (with SCR).

The base station shall set this field to '10' to indicate that the mobile station is to use an initial service configuration consisting of the default multiplex option that is derived from the radio configuration corresponding to Table 3.7.2.3.2.21-3, and to indicate that service negotiation is not to take place before the base station sends one of the following messages: Service Connect Message, General Handoff Direction Message (with SCR) or Universal Handoff Direction Message (with SCR).

The base station shall set this field to '11' to instruct the mobile station to use the stored service configuration (that is, both the Service Configuration information record and the Non-negotiable Service Configuration information record)

The base station shall not set this field to '00'.

SR_ID_RESTORE – Service reference identifier to be restored.

If the GRANTED_MODE field is not set to '11', the base station shall omit this field; otherwise, the base station shall include this field and set it as follows:

- o If the mobile station is to restore all the service option connections from the stored service configuration, the base station shall set this field to '111'.
- o If the mobile station is to restore more than one but not all the service option connections from the stored service configuration, the base station shall set this field to '000'.
- o Otherwise, the base station shall set this field to the service reference identifier corresponding to the service option connection to be restored.

SR_ID_RESTORE_BITMAP – Bitmap of service reference identifiers to be restored.

If the SR_ID_RESTORE field is included and set to '000', the base station shall include this field and set it as follows; otherwise, the base station shall omit this field.

This field consists of the subfields defined in Table 3.7.2.3.2.21-6. The base station shall set a subfield to '1' to indicate that the mobile station is to restore the service option connection of the corresponding service reference identifier; otherwise, the base station shall set the subfield to '0'.

FRAME_OFFSET - Frame offset.

The Forward and Reverse Traffic Channel frames are delayed FRAME_OFFSET × 1.25 ms relative to system timing (see [2]).

The base station shall set this field to the Forward and Reverse Traffic Channel frame offset (the frame offset does not apply to the F-PDCH).

ENCRYPT_MODE - Message encryption mode.

The base station shall set this field to the ENCRYPT_MODE value shown in Table 3.7.2.3.2.8-2 corresponding to the encrypting mode that is to be used for signaling messages, as specified in 2.3.12.2.

D_SIG_ENCRYPT_MODE - Dedicated channel encryption mode indicator.

If ENCRYPT_MODE is set to '11', the base station shall include this field and shall set it to the dedicated channel signaling message mode, as shown in Table 3.7.4.5-1; otherwise the base station shall omit this field.

ENC_KEY_SIZE - Encryption key size indication.

If ENCRYPT_MODE is set to ‘10’ or ‘11’, the base station shall include this field and shall set it to the encryption key size, as shown in Table 3.7.4.5-2; otherwise, the base station shall omit this field.

C_SIG_ENCRYPT_MODE_INCL - Common channel signaling encryption mode included indicator.

If common channel signaling encryption information is included in this message, the base station shall set this field to ‘1’; otherwise, the base station shall set this field to ‘0’.

C_SIG_ENCRYPT_MODE - Common channel signaling encryption mode indicator.

If C_SIG_ENCRYPT_MODE_INCL is set to ‘1’, the base station shall include this field and shall set it to the common channel signaling encryption mode, as shown in Table 3.7.4.5-1; otherwise, the base station shall omit this field.

MSG_INT_INFO_INCL – Message integrity information included indicator

The base station shall set this field to ‘1’ if the base station supports message integrity; otherwise, the base station shall set this field to ‘0’. If this message is to include a MACI in the LAC Layer, the base station shall set this field to ‘1’.

CHANGE_KEYS – Change keys indicator

If MSG_INT_INFO_INCL is set to ‘0’, the base station shall omit this field; otherwise, the base station shall include this field and set it as follows:

The base station shall set this field to ‘0’ to command the mobile station not to update the encryption key and integrity key. The base station shall set this field to ‘1’ to command the mobile station to update the encryption key and integrity key to the latest being generated.

USE_UAK – Use UAK indicator

If MSG_INT_INFO_INCL is set to ‘0’, the base station shall omit this field; otherwise, the base station shall include this field and set it as follows:

If the base station receives an authentication vector with a UAK, the base station shall set this field to ‘1’ to indicate that the mobile station is to use UMAC; otherwise, the base station shall set this field to ‘0’ to indicate that the mobile station is to use MAC-I.

PLCM_TYPE_INCL - The Public Long Code Mask type included indicator.

The base station shall set this field to ‘1’ if the base station include PLCM_TYPE in the message; otherwise, the base station shall set this field to ‘0’.

PLCM_TYPE - The Public Long Code Mask type indicator.

If PLCM_TYPE_INCL is set to ‘0’, the base station shall omit this field; otherwise, the base station shall include this field and set it as follows.

The base station shall set this field to the corresponding Public Long Code Mask type as specified in Table 3.7.2.3.2.21-5.

PLCM_TYPE '0010' shall not be used when the mobile station is not in its home country (i.e., the MCC of the mobile station is different from the MCC of this base station).

PLCM_TYPE '0011' shall not be used when the mobile station is not in its home network (i.e., the MCC or MNC of the mobile station is different from the MCC or MNC of this base station).

PLCM_39 - The 39 LSB bits of the Public Long Code Mask.

If PLCM_TYPE is not set to '0001', the base station shall omit this field; otherwise, the base station shall include this field and set it to the 39 least significant bits of the public long code mask as defined in 3.6.4.1.10.

RLGAIN_ADJ - Reverse Traffic Channel power .

If DIRECT_CH_ASSIGN_IND field is set to '0', the base station shall set this field to adjust the initial Traffic Channel transmission power relative to the Access Channel or Enhanced Access Channel transmission power. The base station shall set this field as a two's complement signed binary number, in units of 1 dB.

If DIRECT_CH_ASSIGN_IND field is set to '1', the base station shall set this field to adjust the initial Traffic Channel transmission power. The base station shall set this field as a two's complement signed binary number, in units of 1 dB.

NUM_PILOTS - Number of pilots in the Active Set.

The base station shall set this field to number of pilots that are to be in the mobile station's Active Set on the Traffic Channel minus one. The base station shall set this field to the value in the range 0 to N_{6m}-1 inclusive.

EXT_CH_IND - Extended Channel Indicator.

The base station shall set this field as shown in Table2.7.1.3.2.4-11.

FPC_SUBCHAN_GAIN - Forward Power Control Subchannel relative gain.

If EXT_CH_IND signals the allocation of a F-FCH, or a F-DCCH, the base station shall include this field and shall set it as follows; otherwise, the base station shall omit this field.

The base station shall set this field to the power level of the forward link power control subchannel relative to the power level of 20 ms frames at a 9600 bps or 14400 bps rate on the Forward Fundamental Channel or the Forward Dedicated Control Channel indicated by $FPC\_PRI\_CHAN_S$.

The base station shall set the value in units of 0.25 dB.

REV_FCH_GATING_MODE - Reverse eighth gating mode indicator.

If EXT_CH_IND signals the allocation of R-FCH, the base station shall include this field and shall set it as follows; otherwise, the base station shall omit this field.

The base station shall set this field to '1' if the mobile station is allowed to perform the reverse eighth gating mode where the 1/8th rate frames on the Reverse Fundamental Channel are gated off for 10 ms per frame (see [2]); otherwise, the base station shall set this field to '0'.

The base station shall not set this field to '1' if REV_FCH_GATING_REQ included in the *Origination Message* or *Page Response Message* is set to '0'.

REV_PWR_CNTL_DELAY_INCL - Reverse power control delay included indicator.

If REV_FCH_GATING_MODE is not included, or is included and set to '0', then the base station shall omit this field; otherwise, the base station shall include this field and set it as follows.

The base station shall set this field to '1' if REV_PWR_CNTL_DELAY is included in this message; otherwise, the base station shall set this field to '0'.

If the REV_FCH_GATING_MODE field in this message is set to '1' and the REV_PWR_CNTL_INCL field in the *Extended System Parameters Message* is set to '0', the base station shall set this field to '1'.

REV_PWR_CNTL_DELAY - The reverse power control delay.

If REV_PWR_CNTL_DELAY_INCL is not included, or is included and set to '0', then the base station shall omit this field; otherwise, the base station shall include this field and set it as follows:

The base station shall set this field to the closed-loop reverse power control delay minus one (the closed-loop reverse power control delay is the time between the end of a gated-on reverse PCG and the beginning of the reverse PCG where the corresponding feedback is sent on the Forward Power Control Subchannel, see [2]), in units of 1.25 ms.

FULL_CI_FEEDBACK_IND - Full C/I feedback rate indicator.

If the mobile station is to send full C/I feedback every 1.25 ms, the base station shall set this field to '1'. If the mobile station is to transmit full C/I feedback every 20 ms, the base station shall set this field to '0'.

FOR_CPCCH_RATE - The Forward Common Power Control Channel Rate.

If EXT_CH_IND equals '01000', the base station shall include this field and shall set it as follows; otherwise, the base station shall omit this field.

The base station shall set this field to the rate of the Forward Common Power Control Channel as specified in Table 3.7.2.3.2.21-12.

Table 3.7.2.3.2.21-12 Rate of the Forward Common Power Control Channel.

FOR_CPCCH_RATE (binary)	Rate of the F-CPCCH (Hz)
00	800
01	400
10	200
11	Reserved

FOR_CPCCH_UPDATE_RATE - Forward Common Power Control update rate.

If EXT_CH_IND equals '01000', the base station shall include this field and shall set it as follows; otherwise, the base station shall omit this field.

The base station shall set this field to the update rate of the Forward Common Power Control as specified in Table 3.7.2.3.2.21-13 (see [2]).

Table 3.7.2.3.2.21-13 CPCCH/RCCH Update rate.

Encoded update rate (binary)	CPCCH/RCCH Update rate (Hz)
00	800
01	400
10	200
11	Reserved

REV_CQICH_FRAME_OFFSET - Reverse Channel Quality Indicator Channel Frame Offset.

The C/I feedback reports on the Reverse Channel Quality Indicator Channel are delayed REV_CQICH_FRAME_OFFSET × 1.25 ms relative to system timing (see [2]).

The base station shall set this field to the Reverse Channel Quality Indicator Channel frame offset.

REV_CQICH_REPS - Reverse Channel Quality Indicator Channel repetition factor.

The base station shall set this field according to Table 3.7.3.3.2.49-1.

REV_ACKCH_REPS - Reverse Acknowledgment Channel repetition factor.

The base station shall set this field according to Table 3.7.3.3.2.49-2.

FOR_PDCH_RC - Forward Packet Data Channel radio configuration.

The base station shall set this field to the radio configuration (see Table 3.7.2.3.2.21-4) to be used by the mobile station on the Forward Packet Data Channel.

REV_PDCH_RC - Reverse Packet Data Channel radio configuration.

If EXT_CH_IND signals the allocation of a R-PDCH, the base station shall include this field and shall set it as follows; otherwise, the base station shall omit this field.

The base station shall set this field to the radio configuration (see Table 3.7.2.3.2.21-4) to be used by the mobile station on the Reverse Packet Data Channel.

FOR_FCH_DCCH_RC - Forward Fundamental Channel or Forward Dedicated Control Channel radio configuration.

If EXT_CH_IND signals the allocation of a F-FCH, or a F-DCCH, the base station shall include this field and shall set it as follows; otherwise, the base station shall omit this field.

The base station shall set this field to the radio configuration (see Table 3.7.2.3.2.21-4) to be used by the mobile station on the Forward Fundamental Channel, or on the Forward Dedicated Control Channel, or on both.

The initial service configuration consisting of the default multiplex option that is to be used by the mobile station is derived from the radio configuration corresponding to Table 3.7.2.3.2.21-3.

REV_FCH_DCCH_RC - Reverse Fundamental Channel or Reverse Dedicated Control Channel radio configuration.

If EXT_CH_IND signals the allocation of a R-FCH, or a R-DCCH, the base station shall include this field and shall set it as follows; otherwise, the base station shall omit this field.

The base station shall set this field to the radio configuration (see Table 3.7.2.3.2.21-4) to be used by the mobile station on the Reverse Fundamental Channel, or on the Reverse Dedicated Control Channel, or on both.

The initial service configuration consisting of the default multiplex option that is to be used by the mobile station is derived from the radio configuration corresponding to Table 3.7.2.3.2.21-3.

FPC_PRI_CHAN - Power Control Subchannel indicator.

If EXT_CH_IND signals the allocation of a F-FCH and a F-DCCH, the base station shall set this field as follows; otherwise, the base station shall omit this field.

The base station shall set this field to ‘0’ if the mobile station is to perform the primary inner loop estimation on the received Forward Fundamental Channel. The base station shall set this field to ‘1’ if the mobile station is to perform the primary inner loop estimation on the received Forward Dedicated Control Channel.

If the F-CPCCH is assigned, the base station shall multiplex the Power Control Subchannel on the F-CPCCH; otherwise:

If this field is set to '0', the base station shall multiplex the Power Control Subchannel on the Forward Fundamental Channel; otherwise, the base station shall multiplex the Power Control Subchannel on the Forward Dedicated Control Channel.

FPC_FCH_INIT_SETPT - Initial Fundamental Channel outer loop E_b/N_t setpoint.

If EXT_CH_IND signals the allocation of a F-FCH, the base station shall include this field and shall set it as follows; otherwise, the base station shall omit this field.

The base station shall set this field to initial Fundamental Channel outer loop E_b/N_t setpoint, in units of 0.125 dB.

FPC_FCH_FER - Fundamental Channel target Frame Error Rate.

If EXT_CH_IND signals the allocation of a F-FCH, the base station shall include this field and shall set it as follows; otherwise it shall be omitted.

The base station shall set this field to the target Frame Error Rate on the Forward Fundamental Channel, as specified in Table 3.7.3.3.2.25-2.

FPC_FCH_MIN_SETPT - Minimum Fundamental Channel Outer Loop E_b/N_t setpoint.

If EXT_CH_IND signals the allocation of a F-FCH, the base station shall include this field and shall set it as follows; otherwise it shall be omitted.

The base station shall set this field to minimum Fundamental Channel Outer Loop E_b/N_t setpoint, in units of 0.125 dB.

FPC_FCH_MAX_SETPT - Maximum Fundamental Channel Outer Loop E_b/N_t setpoint.

If EXT_CH_IND signals the allocation of a F-FCH, the base station shall include this field and shall set it as follows; otherwise it shall be omitted.

The base station shall set this field to maximum Fundamental Channel Outer Loop E_b/N_t setpoint, in units of 0.125 dB.

FPC_DCCH_INIT_SETPT - Initial Dedicated Control Channel outer loop E_b/N_t setpoint.

If EXT_CH_IND signals the allocation of a F-DCCH, the base station shall include this field and shall set it as follows; otherwise it shall be omitted.

The base station shall set this field to initial Dedicated Control Channel outer loop E_b/N_t setpoint, in units of 0.125 dB.

FPC_DCCH_FER - Dedicated Control Channel target Frame Error Rate.

If EXT_CH_IND signals the allocation of a F-DCCH, the base station shall include this field and shall set it as follows; otherwise it shall be omitted.

The base station shall set this field to the target Frame Error Rate on the Dedicated Control Channel, as specified in Table 3.7.3.3.2.25-2.

FPC_DCCH_MIN_SETPT - Minimum Dedicated Control Channel Outer Loop E_b/N_t setpoint.

If EXT_CH_IND signals the allocation of a F-DCCH, the base station shall include this field and shall set it as follows; otherwise it shall be omitted.

The base station shall set this field to minimum Dedicated Control Channel Outer Loop E_b/N_t setpoint, in units of 0.125 dB.

FPC_DCCH_MAX_SETPT - Maximum Dedicated Control Channel Outer Loop E_b/N_t setpoint.

If EXT_CH_IND signals the allocation of a F-DCCH, the base station shall include this field and shall set it as follows; otherwise it shall be omitted.

The base station shall set this field to maximum Dedicated Control Channel Outer Loop E_b/N_t setpoint, in units of 0.125 dB.

PDCH_GROUP_IND_INCL - Packet Data Channel Group Indicator included flag.

The base station shall set this field to ‘1’ if the PDCH_GROUP_IND fields are included; otherwise, the base station shall set this field to ‘0’.

If this field is set to ‘0’, the mobile station is to use PWR_COMB_IND to determine whether the softer or soft reselection parameters are used when re-pointing between pilots in its Active Set (see [3]).

FOR_PDCH_PARMS_INCL - Indicator of the inclusion of Forward Packet Data Channel configuration fields.

The base station shall set this field to ‘1’ if the Forward Packet Data Channel configuration fields are included; otherwise, the base station shall set this field to ‘0’.

FOR_PDCH_RLGAIN_INCL - Forward Packet Data Channel parameters related to reverse link adjustment gains included indicator.

If FOR_PDCH_PARMS_INCL is omitted, or if it is included and set to ‘0’, the base station shall omit this field; otherwise, the base station shall include this field, and set it as follows.

The base station shall set this field to ‘1’ if the following F-PDCH gain related fields are included in this message; otherwise, the base station shall set this field to ‘0’.

RLGAIN_ACKCH_PILOT - Reverse Acknowledgment Channel to pilot adjustment gain.

If FOR_PDCH_RLGAIN_INCL is omitted, or if it is included and set to '0', the base station shall omit this field; otherwise, the base station shall include this field, and set it as follows.

The base station shall set this field to the Reverse Acknowledgment Channel to pilot adjustment gain expressed as a two's complement value in units of 0.125 dB (see [2]).

RLGAIN_CQICH_PILOT - Reverse Channel Quality Indicator Channel to pilot adjustment gain.

If FOR_PDCH_RLGAIN_INCL is omitted, or if it is included and set to '0', the base station shall omit this field; otherwise, the base station shall include this field, and set it as follows.

The base station shall set this field to the Reverse Channel Quality Indicator Channel to pilot adjustment gain expressed as a two's complement value in units of 0.125 dB (see [2]).

NUM_SOFT_SWITCHING_FRAMES - Number of frames for R-CQICH soft switching.

If FOR_PDCH_PARMS_INCL is equal to '0', the base station shall omit this field; otherwise, the base station shall include this field and set it as follows:

The base station shall set this field to the duration of the cell switching period, in units of 20 ms, minus one, during which the mobile station is to transmit the cell switch sequence on the R-CQICH channel when it switches between two pilots which are in different groups.

If PDCH_GROUP_IND_INCL is set to '1', these groups are indicated by PDCH_GROUP_IND; otherwise, they are indicated by PWR_COMB_IND.

NUM_SOFTER_SWITCHING_FRAMES - Number of frames for R-CQICH softer switching.

If FOR_PDCH_PARMS_INCL is equal to '0', the base station shall omit this field; otherwise, the base station shall include this field and set it as follows:

The base station shall set this field to the duration of the cell switching period, in units of 20 ms, minus one, during which the mobile station is to transmit the cell switch sequence on the R-CQICH channel when it switches between two pilots which are in the same group.

If PDCH_GROUP_IND_INCL is set to '1', these groups are indicated by PDCH_GROUP_IND; otherwise, they are indicated by PWR_COMB_IND.

NUM_SOFT_SWITCHING_SLOTS - Number of slots per frame for R-CQICH soft switching.

If FOR_PDCH_PARMS_INCL is equal to '0', the base station shall omit this field; otherwise, the base station shall include this field and set it as follows:

The base station shall set this field to the duration of the cell switching slots within a switching frame, in units of 1.25 ms as specified in Table 3.7.2.3.2.21-10, during which the mobile station is to transmit the cell switch indication by using Walsh cover of target on the R-CQICH when it switches between two pilots which are in different groups.

If PDCH_GROUP_IND_INCL is set to '1', these groups are indicated by PDCH_GROUP_IND; otherwise, they are indicated by PWR_COMB_IND.

Table 3.7.2.3.2.21-10 Number of slots per frame for R-CQICH switching.

NUM_SOFT/SOFTER_SWITCHING_SLOTS (binary)	Number of slots per frame for R-CQICH switching.
00	2
01	4
10	7
11	Reserved

NUM_SOFTER_SWITCHING_SLOTS - Number of slots per frame for R-CQICH softer switching.

If FOR_PDCH_PARMS_INCL is equal to '0', the base station shall omit this field; otherwise, the base station shall include this field and set it as follows:

The base station shall set this field to the duration of the cell switching slots within a switching frame, in units of 1.25 ms as specified in Table 3.7.2.3.2.21-10, during which the mobile station is to transmit the cell switch indication by using Walsh cover of target on the R-CQICH when it switches between two pilots which are in the same group.

If PDCH_GROUP_IND_INCL is set to '1', these groups are indicated by PDCH_GROUP_IND; otherwise, they are indicated by PWR_COMB_IND.

CHM_SWITCHING_PARMS_INCL - Control Hold Mode fields included indicator.

If FOR_PDCH_PARMS_INCL is equal to '0', the base station shall omit this field; otherwise, the base station shall include this field and set it as follows.

The base station shall set this field to '1' if the switching parameters for Control Hold Mode are included; otherwise, the base station shall set this field to '0'.

NUM_SOFT_SWITCHING_FRAMES_CHM - Number of frames for R-CQICH soft switching while in Control Hold.

If CHM_SWITCHING_PARMS_INCL is omitted or equal to '0', the base station shall omit this field; otherwise, the base station shall include this field and set it as follows:

The base station shall set this field to the duration of the cell switching period, in units of 20 ms, minus one, during which the mobile station, while in Control Hold, is to transmit the cell switch sequence on the R-CQICH when it switches between two pilots which are in different groups.

If PDCH_GROUP_IND_INCL is set to '1', these groups are indicated by PDCH_GROUP_IND; otherwise, they are indicated by PWR_COMB_IND.

NUM_SOFTER_SWITCHING_FRAMES_CHM - Number of frames for R-CQICH softer switching while in Control Hold.

If CHM_SWITCHING_PARMS_INCL is omitted or equal to '0', the base station shall omit this field; otherwise, the base station shall include this field and set it as follows:

The base station shall set this field to the duration of the cell switching period, in units of 20 ms, minus one, during which the mobile station, while in Control Hold, is to transmit the cell switch sequence on the R-CQICH when it switches between two pilots which are in the same group.

If PDCH_GROUP_IND_INCL is set to '1', these groups are indicated by PDCH_GROUP_IND; otherwise, they are indicated by PWR_COMB_IND.

NUM_SOFT_SWITCHING_SLOTS_CHM - Number of slots per frame for R-CQICH soft switching while in Control Hold.

If CHM_SWITCHING_PARMS_INCL is omitted or equal to '0', the base station shall omit this field; otherwise, the base station shall include this field and set it as follows:

The base station shall set this field to the duration of the cell switching slots within a switching frame, in units of 1.25 ms as specified in Table 3.7.2.3.2.21-10, during which the mobile station, while in Control Hold, is to transmit the cell switch indication by using Walsh cover of target on the R-CQICH when it switches between two pilots which are in different groups.

If PDCH_GROUP_IND_INCL is set to '1', these groups are indicated by PDCH_GROUP_IND; otherwise, they are indicated by PWR_COMB_IND.

NUM_SOFTER_SWITCHING_SLOTS_CHM - Number of slots per frame for R-CQICH softer switching while in Control Hold.

If CHM_SWITCHING_PARMS_INCL is omitted or equal to '0', the base station shall omit this field; otherwise, the base station shall include this field and set it as follows:

The base station shall set this field to the duration of the cell switching slots within a switching frame, in units of 1.25 ms as specified in Table 3.7.2.3.2.21-10, during which the mobile station, while in Control Hold, is to transmit the cell switch indication by using Walsh cover of target on the R-CQICH when it switches between two pilots which are in the same group.

If PDCH_GROUP_IND_INCL is set to '1', these groups are indicated by PDCH_GROUP_IND; otherwise, they are indicated by PWR_COMB_IND.

PDCH_SOFT_SWITCHING_DELAY - F-PDCH Soft Switching Delay.

If FOR_PDCH_PARMS_INCL is equal to '0', the base station shall omit this field; otherwise, the base station shall include this field and set it as follows:

The base station shall set this field to the minimum interruption seen by the mobile station, in units of 10 ms, minus one, when the mobile station is to transmit the cell switch sequence on the R-CQICH when it switches between two pilots which are in different groups.

If PDCH_GROUP_IND_INCL is set to '1', these groups are indicated by PDCH_GROUP_IND; otherwise, they are indicated by PWR_COMB_IND.

PDCH_SOFTER_SWITCHING_DELAY - F-PDCH Soft Switching Delay.

If FOR_PDCH_PARMS_INCL is equal to '0', the base station shall omit this field; otherwise, the base station shall include this field and set it as follows:

The base station shall set this field to the minimum interruption seen by the mobile station, in units of 10 ms, minus one, when the mobile station is to transmit the cell switch sequence on the R-CQICH when it switches between two pilots which are in the same group.

If PDCH_GROUP_IND_INCL is set to '1', these groups are indicated by PDCH_GROUP_IND; otherwise, they are indicated by PWR_COMB_IND.

TX_DISABLED_TIMER_INCL - Transmitter disabled timer included flag.

The base station shall set this field to '1' if the following TX_DISABLED_TIMER field is included; otherwise, the base station shall set this field to '0'.

TX_DISABLED_TIMER - Transmitter disabled timer.

If TX_DISABLED_TIMER_INCL is equal to '0', the base station shall omit this field; otherwise, the base station shall include this field and set it as follows:

The base station shall set this field to the maximum time, in units of 20ms, the mobile station's transmitter can be disabled before the MAC Layer is to perform Forward Packet Data Channel initialization.(See [3])

FOR_GCH_ASSIGNED - Forward Grant Channel assignment indicator.

If EXT_CH_IND signals the allocation of a R-PDCH, the base station shall include this field and shall set it as follows; otherwise, the base station shall omit this field.

The base station shall set this field to '1' if the mobile station is to listen to grants on the Forward Grant Channel; otherwise, the base station shall set this field to '0' (see [3]).

FOR_RCCH_ASSIGNED - Forward Rate Control Channel assignment indicator.

If EXT_CH_IND signals the allocation of a R-PDCH, the base station shall include this field and shall set it as follows; otherwise, the base station shall omit this field.

The base station shall set this field to '1' if the mobile station is to follow rate control indicators on the Forward Rate Control Channel; otherwise, the base station shall set this field to '0' (see [3]).

FOR_RCCH_DRC_MODE - Forward Rate Control Channel Dedicated Rate Control Mode Indicator.

If FOR_RCCH_ASSIGNED is omitted, or if it is included and set to '0', the base station shall omit this field; otherwise, the base station shall include this field and set it as follows.

The base station shall set this field to '1' if the dedicated rate control mode is being used on the Forward Rate Control Channel; otherwise, the base station shall set this field to '0' if the common rate control mode is being used (see [3]).

FOR_RCCH_REPETITION - Forward Rate Control Subchannel repetition factor.

If FOR_RCCH_ASSIGNED is omitted, or if it is included and set to '0', the base station shall omit this field; otherwise, the base station shall include this field and set it as follows.

The base station shall set this field to the subchannel repetition factor of the Rate Control Subchannel on all pilots.

as specified in Table 3.7.2.3.2.21-11. See [2].

Table 3.7.2.3.2.21-11 Repetition factor for the F-RCCH.

FOR_RCCH_ REPETITION (binary)	Repetition factor for the F-RCCH.
00	2
01	4
10	8
11	Reserved

FOR_RCCH_UPDATE_RATE - Forward Rate Control Subchannel update rate.

If FOR_RCCH_ASSIGNED is omitted, or if it is included and set to ‘0’, the base station shall omit this field; otherwise, the base station shall include this field and set it as follows.

The base station shall set this field to the update rate of the Rate Control Subchannel on all pilots as specified in Table 3.7.2.3.2.21-13. See [2].

FOR_ACKCH_ASSIGNED - Forward Acknowledgment Channel assignment indicator.

If EXT_CH_IND signals the allocation of a R-PDCH, the base station shall include this field and shall set it as follows; otherwise, the base station shall omit this field.

The base station shall set this field to ‘1’ if the mobile station is to listen to acknowledgments on the Forward Acknowledgment Channel; otherwise, the base station shall set this field to ‘0’ (see [2] and [3]).

FOR_ACKCH_MODE - Forward Acknowledgment Channel Mode.

If FOR_ACKCH_ASSIGNED is omitted, or if it is included and set to ‘0’, the base station shall omit this field; otherwise, the base station shall include this field and set it as follows.

The base station shall set this field to the Acknowledgment Channel operation mode identifier that governs how the Acknowledgment channel is demodulated. See [2] and [3] for the details.

The base station shall set this field to ‘00’ if the mobile station is to attempt the reception of the Forward Acknowledgment Channel from all members of the reduced active set of the Forward Packet Data Channel, and is not to softer combine acknowledgments.

The base station shall set this field to ‘01’ if the mobile station is to attempt reception of the Forward Acknowledgment Channel from all members of the reduced active set, and is to combine the acknowledgments from all sectors in the same combining indicator set.

The base station shall set this field to '10' if the mobile station is to attempt reception of the Forward Acknowledgment Channel from the serving sector only.

The base station shall set this field to '11' if the mobile station is to combine the Forward Acknowledgment Channel from all sectors in the same combining indicator set as the serving sector.

FOR_ACKCH_COMB_SEL - Forward Acknowledgment Channel Combining method selector.

If FOR_ACKCH_ASSIGNED is omitted, or if it is included and set to '0', or if FOR_ACKCH_MODE is omitted, or if it is included and set to '00' or '10', or if PDCH_GROUP_IND_INCL is set to '0', the base station shall omit this field; otherwise, it shall include it and set it as follows.

The base station shall set this field to '0' if the mobile station is to use PWR_COMB_IND as a combining indicator when receiving the Forward Acknowledgment Channel; otherwise, it shall set it to '1' if the mobile station is to use PDCH_GROUP_IND as the indicator for combining sectors.

REV_PDCH_PARMS_INCL - Reverse Packet Data Channel related parameters included indicator.

If EXT_CH_IND signals the allocation of a R-PDCH, the base station shall include this field and shall set it as follows; otherwise, the base station shall omit this field.

The base station shall set this field to '1' if the following R-PDCH parameters are included in this message; otherwise, the base station shall set this field to '0'.

REV_PDCH_RLGAIN_INCL - Reverse Packet Data Channel parameters related to reverse link adjustment gains included indicator.

If REV_PDCH_PARMS_INCL is omitted, or if it is included and set to '0', the base station shall omit this field; otherwise, the base station shall include this field, and set it as follows.

The base station shall set this field to '1' if the following R-PDCH gain related fields are included in this message; otherwise, the base station shall set this field to '0'.

RLGAIN_SPICH_PILOT - Reverse Secondary Pilot Channel to pilot adjustment gain.

If REV_PDCH_RLGAIN_INCL is omitted, or if it is included and set to '0', the base station shall omit this field; otherwise, the base station shall include this field, and set it as follows.

The base station shall set this field to the Reverse Secondary Pilot Channel to pilot adjustment gain expressed as a two's complement value in units of 0.125 dB (see [2]).

RLGAIN_REQCH_PILOT - Reverse Request Channel to pilot adjustment gain.

If REV_PDCH_RLGAIN_INCL is omitted, or if it is included and set to '0', the base station shall omit this field; otherwise, the base station shall include this field, and set it as follows.

The base station shall set this field to the Reverse Request Channel to pilot adjustment gain expressed as a two's complement value in units of 0.125 dB (see [2]).

RLGAIN_PDCCH_PILOT - Reverse Packet Data Control Channel to pilot adjustment gain.

If REV_PDCH_RLGAIN_INCL is omitted, or if it is included and set to '0', the base station shall omit this field; otherwise, the base station shall include this field, and set it as follows.

The base station shall set this field to the Reverse Packet Data Channel to pilot adjustment gain expressed as a two's complement value in units of 0.125 dB (see [2]).

REV_PDCH_PARMS_1_INCL - Reverse Packet Data Channel parameters subset included indicator.

If REV_PDCH_PARMS_INCL is omitted, or if it is included and set to '0', the base station shall omit this field; otherwise, the base station shall include this field, and set it as follows.

The base station shall set this field to '1' if the following R-PDCH parameters are included in this message; otherwise, the base station shall set this field to '0'.

REV_PDCH_TABLE_SEL - Reverse Packet Data Channel Table selector.

If REV_PDCH_PARMS_1_INCL is omitted, or if it is included and set to '0', the base station shall omit this field; otherwise, the base station shall include this field, and set it as follows.

The base station shall set this field to the Reverse Packet Data Channel Table selector (see [2]).

REV_PDCH_MAX_AUTO_TPR - Reverse Packet Data Channel maximum traffic to pilot ratio for autonomous transmission.

If REV_PDCH_PARMS_1_INCL is omitted, or if it is included and set to '0', the base station shall omit this field; otherwise, the base station shall include this field and set it as follows.

The base station shall set this field to the maximum traffic to pilot ratio for autonomous transmission on the Reverse Packet Data Channel (see [2] and [3]).

The base station shall set this field to a value in the range 0 to 18 dB inclusive in units of 0.125 dB.

The base station shall include NUM_PILOTS plus one occurrences of the following record, one for each member of the mobile station's Active Set on the Traffic Channel.

PILOT_PN - Pilot PN sequence offset index.

The base station shall set this field to the pilot PN sequence offset for this pilot in units of 64 PN chips.

ADD_PILOT_REC_INCL - Additional pilot information included indicator.

The base station shall set this field to ‘1’ if additional pilot information listed in PILOT_REC_TYPE and RECORD_LEN fields are included. The base station shall set this field to ‘0’ if the corresponding pilot is the common pilot and there is no additional pilot information included.

PILOT_REC_TYPE - Pilot record type.

If ADD_PILOT_REC_INCL is set to ‘1’, the base station shall set this field to the PILOT_REC_TYPE value shown in Table 3.7.2.3.2.21-9 corresponding to the type of Pilot Record specified by this record.

If ADD_PILOT_REC_INCL is set to ‘0’, the base station shall omit this field.

RECORD_LEN - Pilot record length.

If ADD_PILOT_REC_INCL is set to ‘1’, the base station shall set this field to the number of octets in the type-specific fields of this pilot record.

If ADD_PILOT_REC_INCL is set to ‘0’, the base station shall omit this field.

Type-specific fields - Pilot record type-specific fields.

If ADD_PILOT_REC_INCL is set to ‘1’, the base station shall include type-specific fields based on the PILOT_REC_TYPE of this pilot record as described in 3.7.6.1.

If ADD_PILOT_REC_INCL is set to ‘0’, the base station shall omit this field.

FOR_PDCH_INCL - Forward Packet Data Channel assignment included indicator.

The base station shall set this field to ‘1’ if the MS is assigned resources on the F-PDCH channel; otherwise, the base station shall set this field to ‘0’. This field shall be set to '1' for at least one of the pilots included in this message.

WALSH_TABLE_ID - The index of the Walsh Table used.

If FOR_PDCH_PARMS_INCL is set to ‘1’, and FOR_PDCH_INCL is set to ‘1’, the base station shall include this field and set it as follows; otherwise, the base station shall omit this field.

The base station shall set this field to the index of the Walsh Table being used by the Packet Data Channel. (See [3]).

NUM_PDCCH - The number of Packet Data Control Channels supported.

If FOR_PDCH_PARMS_INCL is set to ‘1’, and FOR_PDCH_INCL is set to ‘1’, the base station shall include this field and set it as follows; otherwise, the base station shall omit this field.

The base station shall set this field to ‘000’ if the pilot supports one Packet Data Control Channel. The base station

shall set this field to '001' if the pilot supports two Packet Data Control Channels. The base station shall not set this field to any other value.

The base station shall include *NUM_PDCCH+1* occurrences of the following one-field record:

FOR_PDCCH_WALSH - Forward Packet Data Control Channel Walsh code assignment.

If FOR_PDCH_PARMS_INCL is set to '1', and FOR_PDCH_INCL is set to '1', the base station shall include this field and set it as follows; otherwise, the base station shall omit this field.

The base station shall set this field to the Walsh code assignment for the Forward Packet Data Control Channel.

If NUM_PDCCH is set to '001', the Walsh code of PDCCH0 shall be included first, followed by the Walsh code for PDCCH1

MAC_ID - Medium Access Control index.

If FOR_PDCH_INCL is set to '0', the base station shall omit this field; otherwise, the base station shall include this field and set it as follows:

The base station shall set this field to the MAC index assigned to the mobile station by this pilot.

The base station shall set this field to an integer value larger than 63.

REV_CQICH_COVER - Reverse Channel Quality Indicator Channel cover.

If FOR_PDCH_INCL is set to '0', the base station shall omit this field; otherwise, the base station shall include this field and set it as follows:

The base station shall set this field to the index of the R-CQICH cover associated with this pilot (See [2]).

FOR_CPCCH_WALSH - The Forward Common Power Control Channel Walsh code assignment.

If EXT_CH_IND signals the allocation of a F-CPCCH, and either of the following conditions is true:

- EXT_CH_IND signals the allocation of a F-FCH or a F-DCCH
- all of the following conditions are true:
  - FOR_PDCH_INCL is set to '1'
  - EXT_CH_IND does not signal allocation of a F-FCH
  - EXT_CH_IND does not signal allocation of a F-DCCH

the base station shall include this field and shall set it as follows; otherwise, the base station shall omit this field

The base station shall set this field to the Walsh code assignment for the Forward Common Power Control Channel.

FOR_CPCSCH - The Forward Common Power Control Channel Subchannel.

If EXT_CH_IND signals the allocation of a F-CPCCH, and either of the following conditions is true:

– EXT_CH_IND signals the allocation of a F-FCH or a F-DCCH

– all of the following conditions are true:

+ FOR_PDCH_INCL is set to ‘1’

+ EXT_CH_IND does not signal allocation of a F-FCH

+ EXT_CH_IND does not signal allocation of a F-DCCH

the base station shall include this field and shall set it as follows; otherwise, the base station shall omit this field.

The base station shall set this field to the Forward Common Power Control Channel Subchannel associated with this base station.

If FOR_CPCCH_RATE is omitted, or if it is included and set to ‘00’, the base station shall set this field to a value in the range 0 to 23 inclusive. If FOR_CPCCH_RATE is included and set set to ‘01’, the base station shall set this field to a value in the range 0 to 47 inclusive. If FOR_CPCCH_RATE is included and set set to ‘10’, the base station shall set this field to a value in the range 0 to 95 inclusive.

PWR_COMB_IND - Power control symbol combining indicator.

If this pilot will carry the same closed-loop power control subchannel bits as that of the previous pilot in this message, the base station shall set this field to ‘1’; otherwise, the base station shall set this field to ‘0’. The base station shall set this field to ‘0’ in the first record in the pilot list.

PDCH_GROUP_IND - Packet Data Channel Group Indicator.

If PDCH_GROUP_IND_INCL is set to ‘0’, the base station shall omit this field; otherwise, the base station shall include this field and set it as follows.

If the mobile station is to use the softer reselection parameters when re-pointing between this pilot and the previous pilot that has a F-PDCH assigned to this mobile station in this message (i.e. FOR_PDCH_INCL is set to ‘1’), the base station shall set this field to ‘1’ (see [3]).

If the mobile station is to use the soft reselection parameters when re-pointing between this pilot and the previous pilot in this message that has a F-PDCH assigned to this mobile station (i.e. FOR_PDCH_INCL is set to ‘1’), the base station shall set this field to ‘0’ (see [3]).

The base station shall set this field to '0' in the first record in the pilot list that has a F-PDCH assigned to this mobile station (i.e. FOR_PDCH_INCL is set to '1').

CODE_CHAN_FCH - Code channel on the Fundamental Channel.

If EXT_CH_IND signals the allocation of a F-FCH, the base station shall include this field and shall set it as follows; otherwise it shall be omitted.

The base station shall set this field to the code channel index (see [2]) that the mobile station is to use on the Fundamental Channel of the Forward Traffic Channel.

If Radio Configuration 1, 2, 3, or 5 (see [2]) is used, the base station shall set this field in the range 1 to 63 inclusive. If Radio Configuration 4, 11, or 12 is used, the base station shall set this field in the range 1 to 127 inclusive.

QOF_MASK_ID_FCH - Quasi-orthogonal function index on the Fundamental Channel.

If EXT_CH_IND signals the allocation of a F-FCH, the base station shall include this field and shall set it as follows; otherwise it shall be omitted.

The base station shall set this field to the index of the Quasi-orthogonal function (see [2]).

CODE_CHAN_DCCH - Code channel on the Dedicated Control Channel.

If EXT_CH_IND signals the allocation of a F-DCCH, the base station shall include this field and shall set it as follows; otherwise it shall be omitted.

The base station shall set this field to the code channel index (see [2]), in the range of 1 to 127 inclusive, that the mobile station is to use on the Dedicated Control Channel of the Forward Traffic Channel.

If Radio Configuration 3 or 5 (see [2]) is used, the base station shall set this field in the range 1 to 63 inclusive. If Radio Configuration 4 is used, the base station shall set this field in the range 1 to 127 inclusive.

QOF_MASK_ID_DCCH - Quasi-orthogonal function index on the Dedicated Control Channel.

If EXT_CH_IND signals the allocation of a F-DCCH, the base station shall include this field and shall set it as follows; otherwise it shall be omitted.

The base station shall set this field to the index of the Quasi-orthogonal function (see [2]).

FOR_ACKCH_WALSH_INDEX - Walsh Code for the Forward Acknowledgment Channel.

If FOR_ACKCH_ASSIGNED is omitted, or if it is included and set to ‘0’, or if FOR_PDCH_INCL is set to ‘0’, or if EXT_CH_IND does not signal the allocation of a R-PDCH, the base station shall omit this field; otherwise, it shall include it and set it as follows.

The base station shall set this field to the Walsh code of the Forward Acknowledgment Channel (see [2]).

FOR_ACKSCH_INDEX - Forward Acknowledgment Subchannel Index.

If FOR_ACKCH_ASSIGNED is omitted, or if it is included and set to ‘0’, or if FOR_PDCH_INCL is set to ‘0’, or if EXT_CH_IND does not signal the allocation of a R-PDCH, the base station shall omit this field; otherwise, it shall include it and set it as follows.

The base station shall set this field to the subchannel index of the Forward Acknowledgment Channel (see [2]). The base station should not use FOR_ACKSCH_INDEX = 0, 1, 2, 96, 97, or 98.

FOR_RCCH_INCL - Forward Rate Control Subchannel included flag.

If FOR_PDCH_INCL is set to ‘0’, or if FOR_RCCH_ASSIGNED is omitted, or if it is included and set to ‘0’, the base station shall omit this field; otherwise, the base station shall include this field and set it as follows.

The base station shall set this field to ‘1’ if a Forward Rate Control Channel Subchannel is allocated on this pilot (see [2]); otherwise, the base station shall set this field to ‘0’.

The base station shall set this field to a non zero value for at least one pilot in this message.

FOR_RCCH_WALSH_INDEX - Walsh Code for the Forward Rate Control Channel Subchannel.

If FOR_RCCH_INCL is omitted, or if it is included and set to ‘0’, the base station shall omit this field; otherwise, the base station shall include this field and set it as follows.

The base station shall set this field to the Walsh code of the Forward Rate Control Channel Subchannel (see [2]).

FOR_RCSCH_INDEX - Forward Rate Control Subchannel.

If FOR_RCCH_INCL is omitted, or if it is included and set to ‘0’, the base station shall omit this field; otherwise, the base station shall include this field and set it as follows.

The base station shall set this field to the subchannel index of the Rate Control Subchannel on this pilot (see [2]).

If FOR_RCCH_REPETITION is set to ‘00’, the base station shall set this field to a value in the range 0 to 95 inclusive. If FOR_RCCH_REPETITION is set to ‘01’, the base station shall set this field to a value in the range 0 to 47 inclusive. If FOR_RCCH_REPETITION is set to ‘10’, the base station shall set this field to a value in the range 0 to 23 inclusive.

The base station shall set this field to the subchannel offset of the Rate Control Subchannel on this pilot.

NUM_FOR_GCH - Number of Forward Grant Channels

If FOR_PDCH_INCL is set to ‘0’, or if FOR_GCH_ASSIGNED is omitted, or if it is included and set to ‘0’, the base station shall omit this field; otherwise, the base station shall include this field and set it as follows.

The base station shall set this field to the number of assigned Forward Grant Channels on this pilot. The base station shall set this field to 0, 1, or 2.

The base station shall set this field to a non zero value for at least one pilot in this message.

If FOR_PDCH_INCL is set to ‘1’, and if FOR_GCH_ASSIGNED is included and set to ‘1’, the base station shall include NUM_FOR_GCH occurrences of the field FOR_GCH_WALSH_INDEX:

FOR_GCH_WALSH_INDEX - Walsh Code for the Forward Grant Channel.

The base station shall set this field to the Walsh code of the Forward Grant Channels (see [2]).

SYNC_ID_INCL - Service Configuration synchronization identifier included indicator.

The base station shall omit this field if the GRANTED_MODE field is not set to ’11’; otherwise, the base station shall include this field and set it as follows:

If the mobile station is to use a stored service configuration corresponding to SYNC_ID field included in this message, the base station shall set this field to ‘1’, otherwise, the base station shall set this field to ‘0’.

SYNC_ID_LEN - Service Configuration synchronization identifier length indicator.

If the SYNC_ID_INCL field is not included or is included and is set to ‘0’, the base station shall omit this field; otherwise the base station shall include this field and set it as follows:

The base station shall set this field to the length of the SYNC_ID field included in this message.

SYNC_ID - Service Configuration synchronization identifier.

If the SYNC_ID_INCL field is not included or is included and is set to ‘0’, the base station shall omit this field; otherwise, the base station shall include this field and set it as follows:

The base station shall set this field to the Service Configuration synchronization identifier corresponding to the stored service configuration that the mobile station is to use.

CONFIG_MSG_SEQ - Configuration message sequence number.

If the DIRECT_CH_ASSIGN_IND is set to ‘0’, the base station shall omit this field; otherwise the base station shall include this field and set it as follows:

The base station shall set this field to CONFIG_SEQ (see 3.6.2.2).

RTC_NOM_PWR - Reverse Traffic Channel Nominal Power.

If DIRECT_CH_ASSIGN_IND is set to ‘0’, the base station shall omit this field; otherwise, the base station shall include this field and set it as follows:

The base station shall set this field to the value of the nominal power correction to be used by the mobile station when transmitting on the Reverse Traffic Channel after the Direct Channel Assignment call setup procedure. The base station shall set this field as a two’s complement signed binary number, in units of 1 dB.

RESPOND_IND - Response requested indicator.

If DIRECT_CH_ASSIGN_IND is set to ‘0’, the base station shall omit this field; otherwise, the base station shall include this field and set it as follows:

The base station shall set this field to ‘1’ if the mobile station is to respond to the *Extended Channel Assignment Message* with a *Page Response Message* or *Reconnect Message* in unassured mode on the r-csch; otherwise, the base station shall set this field to ‘0’ to indicate that the mobile station is not to respond on the r-csch.

DIRECT_CH_ASSIGN_RECOVER_IND - Direct Channel Assignment Recover Indicator.

If DIRECT_CH_ASSIGN_IND is set to ‘0’, the base station shall omit this field; otherwise, the base station shall include this field and set it as follows:

The base station shall set this field to ‘1’ if the mobile station is to transmit a *Page Response Message* or a *Reconnect Message* after failing to acquire the forward traffic channel assigned in this message; otherwise, the base station shall set this field to ‘0’.

EARLY_RL_TRANSMIT_IND - Early Reverse Link Transmission indicator.

If FOR_CPCCH_RATE is included and not set to ‘00’, the base station shall omit this field; otherwise, the base station shall include this field and set it as follows.

The base station shall set this field to ‘1’ if, upon channel assignment, the mobile station is to enable the transmitter prior to receiving sufficient signal quality on the forward link; otherwise, the base station shall set this field to ‘0’.

FUNDICATED_BCMC_IND – BCMC on fundicated channel Indicator.

If the channel assignment in this message contains a Forward Fundicated Channel used for BCMC transmission, the base station shall set this field to ‘1’; otherwise, the base station shall set this field to ‘0’.

ADD_PLCM_FOR_FCH_INCL – Additional PLCM for forward FCH included indicator.

If the FUNDICATED_BCMC_IND field is set to ‘0’, the base station shall omit this field; otherwise, the base station shall include this field and set it as follows:

If the additional PLCM for forward FCH is included in this message, the base station shall set this field to ‘1’; otherwise, the base station shall set this field to ‘0’.

ADD_PLCM_FOR_FCH_TYPE - The Additional Public Long Code Mask for forward FCH type indicator.

If ADD_PLCM_FOR_FCH_INCL is not included or is included and is set to ‘0’, the base station shall omit this field; otherwise, the base station shall include this field and set it as follows.

The base station shall set this field to ‘1’ to indicate PLCM specified by the base station. The field value ‘0’ is reserved.

ADD_PLCM_FOR_FCH_39 - The 39 LSB bits of the additional Public Long Code Mask for forward FCH.

If ADD_PLCM_FOR_FCH_TYPE field is included and is set to ‘1’, the base station shall include this field and set it to the 39 least significant bits of the public long code mask used by the mobile station; otherwise, the base station shall omit this field.

FIXED_PREAMBLE_TRANSMIT_IND - Fixed Number of Preambles Transmission Indicator.

If GRANTED_MODE is not set to ‘11’, the base station shall omit this field; otherwise, the base station shall include this field and set it as follows:

The base station shall set this field to ‘1’ to indicate if the mobile station is allowed to enter *Traffic Channel Substate* of the *Mobile Station Control on the Traffic Channel State* after sending the number of preambles specified in this message; otherwise the base station shall set this field to ‘0’.

If any channel assigned by this message is to use Radio Configuration 1 or 2 (see [2]), then the base station shall set this field to ‘0’.

FIXED_NUM_PREAMBLE - Traffic Channel preamble length.

If FIXED_PREAMBLE_TRANSMIT_IND is not included, or is included and set to '0', the base station shall omit this field; otherwise, the base station shall include this field and set it to the minimum length of Traffic Channel preamble that the mobile station is to transmit, before entering the *Traffic Channel Substate* of the *Mobile Station Control on the Traffic Channel State* without having received a *forward dedicated channel acquired* indication from Layer 2 (see [4]).

The base station shall set FIXED_NUM_PREAMBLE to the value shown in Table 3.7.2.3.2.21-13 corresponding to the Traffic Channel preamble length in ms.

TX_PWR_LIMIT_INCL - Transmit Power Limit inclusion for the current base station

If the transmit power limit field is included in this message, the base station shall set this field to '1'; otherwise, the base station shall set this field to '0'.

TX_PWR_LIMIT - Transmit Power Limit for the current base station

If TX_PWR_LIMIT_INCL is set to '0', the base station shall omit this field; otherwise, the base station shall include this field and set to as follows.

The base station shall set this field to thirty dB more than transmit power limit in dBm EIRP, in steps of 1 dB. This field can take the values 30 to 53 corresponding to maximum transmit power values 0 dBm to 23 dBm.

1 3.7.2.3.2.22 General Neighbor List Message

2 MSG_TAG: GNLM

Field	Length (bits)
PILOT_PN	9
CONFIG_MSG_SEQ	6
PILOT_INC	4
NGHBR_SRCH_MODE	2
NGHBR_CONFIG_PN_INCL	1
FREQ_FIELDS_INCL	1
USE_TIMING	1
GLOBAL_TIMING_INCL	0 or 1
GLOBAL_TX_DURATION	0 or 4
GLOBAL_TX_PERIOD	0 or 7
NUM_NGHBR	6

NUM_NGHBR occurrences of the following record:

{ (NUM_NGHBR)

NGHBR_CONFIG	0 or 3
NGHBR_PN	0 or 9
SEARCH_PRIORITY	0 or 2
SRCH_WIN_NGHBR	0 or 4
FREQ_INCL	0 or 1
NGHBR_BAND	0 or 5
NGHBR_FREQ	0 or 11
TIMING_INCL	0 or 1
NGHBR_TX_OFFSET	0 or 7
NGHBR_TX_DURATION	0 or 4
NGHBR_TX_PERIOD	0 or 7

} (NUM_NGHBR)

NUM_ANALOG_NGHBR	3

NUM_ANALOG_NGHBR occurrences of the following record:

{ (NUM_ANALOG_NGHBR)

(continues on next page)

3

Field	Length (bits)
BAND_CLASS	5
SYS_A_B	2

} (NUM_ANALOG_NGHBR)

SRCH_OFFSET_INCL	1

NUM_NGHBR occurrences of the following record:

{ (NUM_NGHBR)

ADD_PILOT_REC_INCL	1
NGHBR_PILOT_REC_TYPE	0 or 3
RECORD_LEN	0 or 3
Type-specific fields	0 or 8 × RECORD_LEN
SRCH_OFFSET_NGHBR	0 or 3

} (NUM_NGHBR)

BCCH_IND_INCL	1

If BCCH_IND_INCL is set to ‘1’, NUM_NGHBR occurrences of the following record:

{ (NUM_NGHBR)

BCCH_SUPPORT	0 or 1

} (NUM_NGHBR)

RESQ_ENABLED	1
RESQ_DELAY_TIME	0 or 6
RESQ_ALLOWED_TIME	0 or 6
RESQ_ATTEMPT_TIME	0 or 6
RESQ_CODE_CHAN	0 or 11
RESQ_QOF	0 or 2
RESQ_MIN_PERIOD_INCL	0 or 1
RESQ_MIN_PERIOD	0 or 5
RESQ_NUM_TOT_TRANS_INCL	0 or 1
RESQ_NUM_TOT_TRANS_20MS	0 or 4
RESQ_NUM_TOT_TRANS_5MS	0 or 4

(continues on next page)

Field	Length (bits)
RESQ_NUM_PREAMBLE_RC1_RC2	0 or 3
RESQ_NUM_PREAMBLE	0 or 3
RESQ_POWER_DELTA	0 or 3

If RESQ_ENABLED is set to '1', NUM_NGHBR occurrences of the following one-field record:

{ (NUM_NGHBR)

NGHBR_RESQ_CONFIGURED	1

} (NUM_NGHBR)

{ (NUM_NGHBR)

NGHBR_PDCH_SUPPORTED	1

} (NUM_NGHBR)

HRPD_NGHBR_INCL	1
NUM_HRPD_NGHBR	0 or 6

NUM_HRPD_NGHBR occurrences of the following subrecord:

{ (NUM_HRPD_NGHBR)

HRPD_NGHBR_REC_LEN	8
NGHBR_PN	9
NGHBR_FREQ_INCL	1
NGHBR_BAND	0 or 5
NGHBR_FREQ	0 or 11
PN_ASSOCIATION_IND	1
DATA_ASSOCIATION_IND	1
HRPD_NGHBR_REC_RESERVED	0-7 (as needed)

} (NUM_HRPD_NGHBR)

PILOT_PN - Pilot PN sequence offset index.

The base station shall set this field to the pilot PN sequence offset for this base station, in units of 64 PN chips.

CONFIG_MSG_SEQ - Configuration message sequence number.

The base station shall set this field to CONFIG_SEQ (see 3.6.2.2).

PILOT_INC - Pilot PN sequence offset index increment.

A mobile station searches for Remaining Set pilots at pilot PN sequence index values that are multiples of this value.

The base station shall set this field to the pilot PN sequence increment, in units of 64 PN chips, that mobile stations are to use for searching the Remaining Set. The base station should set this field to the largest increment such that the pilot PN sequence offsets of all its neighbor base stations are integer multiples of that increment.

The base station shall set this field to a value in the range 1 to 15 inclusive.

NGHBR_SRCH_MODE - Search mode.

The base station shall set this field to the value shown in Table 3.7.2.3.2.22-1 corresponding to the search mode.

Table 3.7.2.3.2.22-1. Search Mode Field

Value (binary)	Description
00	No search priorities or search windows
01	Search priorities
10	Search windows
11	Search windows and search priorities

NGHBR_CONFIG_PN_INCL - Neighbor configuration and PN offset included.

If neighbor configuration and PN offset fields are included in this message, the base station shall set this field to ‘1’; otherwise, the base station shall set this field to ‘0’.

FREQ_FIELDS_INCL - Frequency fields included.

If frequency fields are included in this message, the base station shall set this field to ‘1’; otherwise, the base station shall set this field to ‘0’.

USE_TIMING - Use timing indicator.

If base station timing information is included for neighbor base stations, the base station shall set this field to ‘1’; otherwise, the base station shall set this field to ‘0’.

GLOBAL_TIMING_INCL - Global timing included.

If USE_TIMING is set to ‘1’, the base station shall include the field GLOBAL_TIMING_INCL and set this field as described below; otherwise, the base station shall omit this field.

If base station timing information is included globally for all neighbor base stations with TIMING_INCL equal to ‘1’, the base station shall set this field to ‘1’; otherwise, the base station shall set this field to ‘0’.

GLOBAL_TX_DURATION - Global neighbor transmit time duration.

If GLOBAL_TIMING_INCL is included and is set to '1', the base station shall include the field GLOBAL_TX_DURATION and shall set this field as described below; otherwise, the base station shall omit this field.

The base station shall set this field to the duration of the base station transmit window, during each period, in units of 80 ms. The base station should set this field to a value of 3 or greater.

GLOBAL_TX_PERIOD - Global neighbor transmit time period.

If GLOBAL_TIMING_INCL is included and is set to '1', the base station shall include the field GLOBAL_TX_PERIOD and shall set this field as described below; otherwise, the base station shall omit this field.

The base station shall set this field to duration of the period, in units of 80 ms.

NUM_NGHBR - Number of neighbor pilot PN sequences.

The base station shall set this field to the number of neighbors included in the message.

The base station shall include one occurrence of the following record for each pilot that a mobile station is to place in its Neighbor Set. The base station shall use the same order for the following record in this message as is used for pilots which are listed in the *Neighbor List Message* or *Extended Neighbor List Message*. Specifically, the ith occurrence of the following record shall correspond the ith pilot in the *Neighbor List Message* or in the *Extended Neighbor List Message*.

NGHBR_CONFIG - Neighbor configuration.

If NGHBR_CONFIG_PN_INCL = '1', the base station shall set this field to the value shown in Table 3.7.2.3.2.22-2 corresponding to the configuration of this neighbor; otherwise, the base station shall omit this field.

Table 3.7.2.3.2.22-2. Neighbor Configuration Field

Value (binary)	Neighbor Configuration
000	The neighbor base station has the same number of frequencies having Paging Channels as the current base station. The neighbor base station has a CDMA frequency assignment corresponding to this current CDMA frequency assignment with the same number of Paging Channels, and the neighbor CDMA frequency is given as follows: • If FREQ_INCL equals '0' for this record, this corresponding CDMA frequency assignment is the current CDMA frequency assignment. • If FREQ_INCL equals '1' for this record, this corresponding CDMA frequency assignment is given by NGHBR_BAND and NGHBR_FREQ. The position of the neighbor CDMA frequency assignment in the *CDMA Channel List Message* or the *Extended CDMA Channel List Message* transmitted by the neighbor base station is the same as the position of this current CDMA frequency assignment in the *CDMA Channel List Message* or the *Extended CDMA Channel List Message* transmitted by the current base station.
001	The neighbor base station has the same number of frequencies having Paging Channels as the current base station. The neighbor base station has a CDMA frequency assignment corresponding to this current CDMA frequency assignment but possibly with a different number of Paging Channels, and the neighbor CDMA frequency is given as follows: • If FREQ_INCL equals '0' for this record, this corresponding CDMA frequency assignment is the current CDMA frequency assignment. • If FREQ_INCL equals '1' for this record, this corresponding CDMA frequency assignment is given by NGHBR_BAND and NGHBR_FREQ. The position of the neighbor CDMA frequency assignment in the *CDMA Channel List Message* or the *Extended CDMA Channel List Message* transmitted by the neighbor base station is the same as the position of this current CDMA frequency assignment in the *CDMA Channel List Message* or the *Extended CDMA Channel List Message* transmitted by the current base station. This corresponding neighbor CDMA frequency assignment does have a Primary Paging Channel.

010	The neighbor base station may have a different number of frequencies having Paging Channels as the current base station. The neighbor base station has a Primary Paging Channel on the following CDMA frequency: • If FREQ_INCL equals '0' for this record, the neighbor base station has a Primary Paging Channel on the first CDMA Channel listed in the *CDMA Channel List Message* or the *Extended CDMA Channel List Message* transmitted by the current base station. • If FREQ_INCL equals '1' for this record, the neighbor base station has a Primary Paging Channel on the CDMA frequency assignment given by NGHBR_BAND and NGHBR_FREQ.
011	The neighbor base station configuration is unknown but the neighbor base station has a Pilot Channel on the following frequency: • If FREQ_INCL equals '0' for this record, the neighbor CDMA frequency assignment is the same as the current CDMA frequency assignment and has a Pilot Channel. • If FREQ_INCL equals '1' for this record, the CDMA frequency assignment given by NGHBR_BAND and NGHBR_FREQ has a Pilot Channel.
100-111	Reserved.

NGHBR_PN - Neighbor pilot PN sequence offset index.

If NGHBR_CONFIG_PN_INCL = '1', the base station shall set this field to the pilot PN sequence offset for this neighbor, in units of 64 PN chips; otherwise, the base station shall omit this field.

SEARCH_PRIORITY - Pilot Channel search priority.

If NGHBR_SRCH_MODE = '01' or NGHBR_SRCH_MODE = '11', then the base station shall set this field to the search priority for the Pilot Channel corresponding to NGHBR_PN. The base station shall set the search priority as shown in Table 3.7.2.3.2.22-3. If NGHBR_SRCH_MODE is set to any other value, the base station shall omit this field.

Table 3.7.2.3.2.22-3. Search Priority Field

Value (binary)	Search Priority
00	Low
01	Medium
10	High
11	Very High

SRCH_WIN_NGHBR - Neighbor pilot channel search window size.

If NGHBR_SRCH_MODE = '10' or '11', then the base station shall set this field to the value shown in Table 2.6.6.2.1-1 corresponding to the search window size to be used by mobile stations for this neighbor. If NGHBR_SRCH_MODE is set to any other value, the base station shall omit this field.

FREQ_INCL - Frequency included indicator.

If FREQ_FIELDS_INCL is set to '0', the base station shall omit this field; otherwise, the base station shall set this field as follows:

If the NGHBR_BAND and NGHBR_FREQ fields are included for this neighbor base station, the base station shall set this bit to '1'. If the NGHBR_BAND and NGHBR_FREQ fields are not included in this assignment record, the base station shall set this bit to '0'.

NGHBR_BAND - Neighbor band class.

If the FREQ_INCL bit is included and is set to '1', the base station shall set this field to the CDMA band class, as specified in [30], corresponding to the CDMA frequency assignment for the CDMA Channel containing the Paging Channel the mobile station is to search. If the FREQ_INCL bit is omitted or is set to '0', the base station shall omit this field.

NGHBR_FREQ - Neighbor frequency assignment.

If the FREQ_INCL bit is omitted or is set to '0', the base station shall omit this field.

If the FREQ_INCL bit is included and is set to '1' and the corresponding neighbor has a 1X neighbor pilot record type, the base station shall set this field to the CDMA Channel number, in the specified CDMA band class, corresponding to the CDMA frequency assignment for the CDMA Channel containing the Paging Channel the mobile station is to search.

If the FREQ_INCL bit is included and is set to '1' and the corresponding neighbor has a 3X neighbor pilot record type, the base station shall set this field to the CDMA Channel number, in the specified CDMA band class, corresponding to the center SR3 frequency assignment containing the Paging Channel the mobile station is to search.

TIMING_INCL - Timing included indicator.

If USE_TIMING is set to '1', the base station shall include the field TIMING_INCL and set this field as described below; otherwise, the base station shall omit this field.

If base station timing information is included for this neighbor base station, the base station shall set this field to '1'; otherwise, the base station shall set this field to '0'.

NGHBR_TX_OFFSET - Neighbor transmit time offset.

If TIMING_INCL is included and is set to '1', the base station shall include the field NGHBR_TX_OFFSET and set this field as described below; otherwise, the base station shall omit this field.

The base station shall set this field to the time offset, in units of 80 ms, from the beginning of the neighbor timing period to the beginning of the first base station transmit window within the period. The beginning of the neighbor timing period occurs when $\lfloor t/4 \rfloor \bmod (16384) = 0$.

NGHBR_TX_DURATION - Neighbor transmit time duration.

If TIMING_INCL is included and is set to '1' and GLOBAL_TIMING_INCL is set to '0', the base station shall include the field NGHBR_TX_DURATION and set this field as described below; otherwise, the base station shall omit this field.

The base station shall set this field to duration of the base station transmit window, during each period, in units of 80 ms. The base station should set this field to a value of 3 or greater.

NGHBR_TX_PERIOD - Neighbor transmit time period.

If TIMING_INCL is included and is set to '1' and GLOBAL_TIMING_INCL is set to '0', the base station shall include the field NGHBR_TX_PERIOD and set this field as described below; otherwise, the base station shall omit this field.

The base station shall set this field to duration of the period, in units of 80 ms.

NUM_ANALOG_NGHBR - Number of neighboring analog systems.

The base station shall set this field to the number of neighboring analog systems included in the message. The base station shall set this field to '000'.

The base station shall include one occurrence of the following record for each neighboring analog system included in the message:

BAND_CLASS - Band class.

The base station shall set this field to the CDMA band class, as specified in [30].

SYS_A_B - System A/B.

If BAND_CLASS is set to '00000' or to '00011', the base station shall set this field to the value shown in Table 3.7.2.3.2.22-4 corresponding to the availability of neighboring analog systems; otherwise, the base station shall set this field to '00'.

Table 3.7.2.3.2.22-4. Cellular System A/B

Cellular System A/B	Value
RESERVED	00
System A	01
System B	10
System A and B	11

SRCH_OFFSET_INCL - Neighbor pilot channel search window offset included.

If NGHBR_SRCH_MODE = '10' or '11' and if the SRCH_OFFSET_NGHBR field is included in the following records, the base station shall set this bit to '1'; otherwise, the base station shall set this bit to '0'.

The base station shall include one occurrence of the following record for each pilot that a mobile station is to place in its Neighbor Set. The base station shall use the same order for the following record in this message as is used for pilots which are listed in the *Neighbor List Message* or *Extended Neighbor List Message*. Specifically, the ith occurrence of the following record shall correspond the ith pilot in the *Neighbor List Message* or in the *Extended Neighbor List Message*.

ADD_PILOT_REC_INCL - Additional pilot information included indicator.

The base station shall set this field to '1' if additional pilot information listed in the NGHBR_PILOT_REC_TYPE and RECORD_LEN fields are included. The base station shall set this field to '0' if the corresponding pilot is the common pilot and there is no additional pilot information included.

NGHBR_PILOT_REC_TYPE - Neighbor Pilot record type

If ADD_PILOT_REC_INCL is set to '1', the base station shall set this field to the NGHBR_PILOT_REC_TYPE value shown in Table 3.7.2.3.2.22-5 corresponding to the type of Pilot Record specified by this record.

Table 3.7.2.3.2.22-5. Neighbor Pilot Record Types

Description	NGHBR_PILOT_REC_TYPE (binary)
1X Common Pilot with Transmit Diversity	000
1X Auxiliary Pilot	001
1X Auxiliary Pilot with Transmit Diversity	010
3X Common Pilot	011
3X Auxiliary Pilot	100
All other NGHBR_PILOT_REC_TYPE values are reserved	

If ADD_PILOT_REC_INCL is set to '0', the base station shall omit this field.

RECORD_LEN - Pilot record length.

If ADD_PILOT_REC_INCL is set to '1', the base station shall set this field to the number of octets in the type-specific fields of this pilot record.

If ADD_PILOT_REC_INCL is set to '0', the base station shall omit this field.

Type-specific fields - Pilot record type-specific fields.

If ADD_PILOT_REC_INCL is set to '1', the base station shall include type-specific fields based on the NGHBR_PILOT_REC_TYPE of this pilot record.

If ADD_PILOT_REC_INCL is set to '0', the base station shall omit this field.

If NGHBR_PILOT_REC_TYPE is equal to '000', the base station shall include the following fields:

Field	Length (bits)
TD_POWER_LEVEL	2
TD_MODE	2
RESERVED	4

TD_POWER_LEVEL - TD Transmit Power Level.

The base station shall set this field to the TD transmit power level relative to that of the Forward Pilot Channel as specified in Table 3.7.2.3.2.26-4.

TD_MODE - Transmit Diversity mode.

The base station shall set this field to the Transmit Diversity mode, as specified in Table 3.7.2.3.2.26-3.

RESERVED - Reserved bits.

The base station shall set this field to '0000'.

If NGHBR_PILOT_REC_TYPE is equal to '001', the base station shall include the following fields:

Field	**Length (bits)**
QOF	2
WALSH_LENGTH	3
AUX_PILOT_WALSH	WALSH_LENGTH+6
RESERVED	0 to 7 (as needed)

QOF - Quasi-orthogonal function index.

The base station shall set this field to the index of the Quasi-orthogonal function (see [2].

WALSH_LENGTH - Length of the Walsh Code.

The base station shall set this field to the WALSH_LENGTH value shown in Table 3.7.2.3.2.22–6 corresponding to the length of the Walsh code for the pilot that is used in as the Auxiliary pilot.

Table 3.7.2.3.2.22-6. Walsh Code Length

WALSH_LENGTH (binary)	**Length of the Walsh Code**
'000'	64
'001'	128
'010'	256
'011'	512
'100' – '111'	Reserved

AUX_PILOT_WALSH - Walsh Code for the Auxiliary Pilot.

The base station shall set this field to the Walsh code corresponding to the Auxiliary pilot.

RESERVED - Reserved bits.

The base station shall set all the bits of this field to '0' to make the entire record octet-aligned.

If NGHBR_PILOT_REC_TYPE is equal to '010', the base station shall include the following fields:

Field	**Length (bits)**
QOF	2
WALSH_LENGTH	3
AUX_WALSH	WALSH_LENGTH+6
AUX_TD_POWER_LEVEL	2
TD_MODE	2
RESERVED	0 to 7 (as needed)

QOF - Quasi-orthogonal function index for the Auxiliary Transmit Diversity Pilot.

The base station shall set this field to the index of the Quasi-orthogonal function (see [2]).

WALSH_LENGTH - Length of the Walsh Code.

The base station shall set this field to the WALSH_LENGTH value shown in 3.7.2.3.2.22-6 corresponding to the length of the Walsh code for the pilots that are used as Auxiliary pilot in the transmit diversity mode.

AUX_WALSH - Walsh Code for the Auxiliary Pilot.

The base station shall set this field to the Walsh code corresponding to the Auxiliary Pilot.

AUX_TD_POWER_LEVEL - Auxiliary Transmit Diversity Pilot Power Level.

The base station shall set this field to the Auxiliary Transmit Diversity Pilot transmit power level relative to that of the Auxiliary Pilot as specified in Table 3.7.2.3.2.22-7.

Table 3.7.2.3.2.22-7. Auxiliary Transmit Diversity Pilot Transmit Power Level

AUX_TD_POWER_LEVEL	Transmit Power Level
00	9 dB below the Auxiliary Pilot Channel transmit power
01	6 dB below the Auxiliary Pilot Channel transmit power
10	3 dB below the Auxiliary Pilot Channel transmit power
11	Same as the Auxiliary Pilot Channel transmit power

TD_MODE - Transmit Diversity mode.

The base station shall set this field to the Transmit Diversity mode, as specified in Table 3.7.2.3.2.26-3.

RESERVED - Reserved bits.

The base station shall set all the bits of this field to '0' to make the entire record octet-aligned.

If NGHBR_PILOT_REC_TYPE is equal to '011', the base station shall include the following fields:

Field	Length (bits)
SR3_PRIMARY_PILOT	2
SR3_PILOT_POWER1	3
SR3_PILOT_POWER2	3

SR3_PRIMARY_PILOT – Primary SR3 pilot.

The base station shall set this field to the value shown in Table 3.7.2.3.2.26-5 corresponding to the position of the primary SR3 pilot.

SR3_PILOT_POWER1 – The primary SR3 pilot power level relative to that of the pilot on the lower frequency of the two remaining SR3 frequencies.

The base station shall set this field to the value shown in Table 3.7.2.3.2.26-6 corresponding to the power level of the primary pilot with respect to the pilot on the lower frequency of the two remaining SR3 frequencies.

SR3_PILOT_POWER2 – The primary SR3 pilot power level relative to that of the pilot on the higher frequency of the two remaining SR3 frequencies.

The base station shall set this field to the value shown in Table 3.7.2.3.2.26-6 corresponding to the power level of the primary pilot with respect to the pilot on the higher frequency of the two remaining SR3 frequencies.

If NGHBR_PILOT_REC_TYPE is equal to '100', the base station shall include the following fields:

Field	Length (bits)
SR3_PRIMARY_PILOT	2
SR3_PILOT_POWER1	3
SR3_PILOT_POWER2	3
QOF	2
WALSH_LENGTH	3
AUX_PILOT_WALSH	WALSH_LENGTH+6
ADD_INFO_INCL1	1
QOF1	0 or 2
WALSH_LENGTH1	0 or 3
AUX_PILOT_WALSH1	0 or WALSH_LENGTH1+6
ADD_INFO_INCL2	1
QOF2	0 or 2
WALSH_LENGTH2	0 or 3
AUX_PILOT_WALSH2	0 or WALSH_LENGTH2+6
RESERVED	0 – 7 (as needed)

SR3_PRIMARY_PILOT – Primary SR3 pilot.

The base station shall set this field to the value shown in Table 3.7.2.3.2.26-5 corresponding to the position of the primary SR3 pilot.

SR3_PILOT_POWER1 – The primary SR3 pilot power level relative to that of the pilot on the lower frequency of the two remaining SR3 frequencies.

The base station shall set this field to the value shown in Table 3.7.2.3.2.26-6 corresponding to the power level of the primary pilot with respect to the pilot on the lower frequency of the two remaining SR3 frequencies.

SR3_PILOT_POWER2 – The primary SR3 pilot power level relative to that of the pilot on the higher frequency of the two remaining SR3 frequencies.

The base station shall set this field to the value shown in Table 3.7.2.3.2.26-6 corresponding to the power level of the primary pilot with respect to the pilot on the higher frequency of the two remaining SR3 frequencies.

QOF - Quasi-orthogonal function index.

The base station shall set this field to the index of the Quasi-orthogonal function (see [2] on the frequency of the primary pilot.

WALSH_LENGTH - Length of the Walsh Code.

The base station shall set this field to the WALSH_LENGTH value shown in Table 3.7.2.3.2.22–6 corresponding to the length of the Walsh code for the pilot that is used as the Auxiliary pilot on the frequency of the primary pilot.

AUX_PILOT_WALSH - Walsh Code for the Auxiliary Pilot.

The base station shall set this field to the Walsh code corresponding to the Auxiliary pilot on the frequency of the primary pilot.

ADD_INFO_INCL1 - Additional information included for the pilot on the lower frequency of the two remaining SR3 frequencies.

If the additional information for the pilot on the lower frequencies of the two remaining SR3 frequencies is the same as pilot on the primary frequency, the base station shall set this field to ‘0’; otherwise, the base station shall set this field to ‘1’.

QOF1 - Quasi-orthogonal function index for the pilot on the lower frequency of the two remaining SR3 frequencies.

If ADD_INFO_INCL1 is set to ‘0’, the base station shall omit this field; otherwise, the base station shall set this field as follows:

The base station shall set this field to the index of the Quasi-orthogonal function (see [2]) on the lower frequency of the two remaining SR3 frequencies.

WALSH_LENGTH1 - Length of the Walsh Code for the pilot on the lower frequency of the two remaining SR3 frequencies.

If ADD_INFO_INCL1 is set to ‘0’, the base station shall omit this field; otherwise, the base station shall set this field as follows:

The base station shall set this field to the WALSH_LENGTH value shown in Table 3.7.2.3.2.22–6 corresponding to the length of the Walsh code for the pilot that is used as the Auxiliary pilot on the lower frequency of the two remaining SR3 frequencies.

AUX_PILOT_WALSH1 - Walsh Code for the Auxiliary Pilot on the lower frequency of the two remaining SR3 frequencies.

If ADD_INFO_INCL1 is set to ‘0’, the base station shall omit this field; otherwise, the base station shall set this field as follows:

The base station shall set this field to the Walsh code corresponding to the Auxiliary pilot on the lower frequency of the two remaining SR3 frequencies.

ADD_INFO_INCL2 - Additional information included for the pilot on the higher frequency of the two remaining SR3 frequencies.

If the additional information for the pilot on the higher frequencies of the two remaining SR3 frequencies is the same as pilot on the primary frequency, the base station shall set this field to ‘0’; otherwise, the base station shall set this field to ‘1’.

QOF2 - Quasi-orthogonal function index for the pilot on the higher frequency of the two remaining SR3 frequencies.

If ADD_INFO_INCL2 is set to ‘0’, the base station shall omit this field; otherwise, the base station shall set this field as follows:

The base station shall set this field to the index of the Quasi-orthogonal function (see [2]) on the higher frequency of the two remaining SR3 frequencies.

WALSH_LENGTH2 - Length of the Walsh Code for the pilot on the higher frequency of the two remaining SR3 frequencies.

If ADD_INFO_INCL2 is set to ‘0’, the base station shall omit this field; otherwise, the base station shall set this field as follows:

The base station shall set this field to the WALSH_LENGTH value shown in Table 3.7.2.3.2.22–6 corresponding to the length of the Walsh code for the pilot that is used as the Auxiliary pilot on the higher frequency of the two remaining SR3 frequencies.

AUX_PILOT_WALSH2 - Walsh Code for the Auxiliary Pilot on the higher frequency of the two remaining SR3 frequencies.

If ADD_INFO_INCL2 is set to ‘0’, the base station shall omit this field; otherwise, the base station shall set this field as follows:

The base station shall set this field to the Walsh code corresponding to the Auxiliary pilot on the higher frequency of the two remaining SR3 frequencies.

RESERVED - Reserved bits.

The base station shall set all the bits of this field to ‘0’ to make the entire record octet-aligned.

SRCH_OFFSET_NGHBR - Neighbor pilot channel search window size offset.

If SRCH_OFFSET_INCL equals to ‘1’, then the base station shall set this field to the value shown in Table 2.6.6.2.1-2 corresponding to the search window offset to be used by mobile stations for this neighbor; otherwise, the base station shall omit this field.

BCCH_IND_INCL - BCCH support included indicator.

If the BCCH_SUPPORT field is included in the following records, the base station shall set this field to ‘1’; otherwise, the base station shall set this field to ‘0’.

If BCCH_IND_INCL is set to '1', the base station shall include one occurrence of the following field for each pilot that a mobile station is to place in its Neighbor Set. The base station shall use the same order for the following record in this message as is used for pilots which are listed in the *Neighbor List Message* or *Extended Neighbor List Message*. Specifically, the ith occurrence of the following record shall correspond the ith pilot in the *Neighbor List Message* or in the *Extended Neighbor List Message*.

BCCH_SUPPORT - BCCH support indicator.

If this neighbor base station supports Broadcast Control Channel, the base station shall set this field to '1'; otherwise, the base station shall set this field to '0'.

RESQ_ENABLED – Call rescue feature enabled indicator.

The base station shall set this field to '1' if the call rescue feature is enabled and there is at least one occurrence of NGHBR_RESQ_CONFIGURED set to '1' in this message; otherwise, the base station shall set this field to '0'.

RESQ_DELAY_TIME – Call rescue delay timer value.

If RESQ_ENABLED is set to '0', the base station shall omit this field; otherwise, the base station shall include this field and set it as follows:

The base station shall set this field to the value of the call rescue delay timer to be used by the mobile station, in units of 80 ms.

RESQ_ALLOWED_TIME – Call rescue allowed timer value.

If RESQ_ENABLED is set to '0', the base station shall omit this field; otherwise, the base station shall include this field and set it as follows:

The base station shall set this field to the value of the call rescue allowed timer to be used by the mobile station, in units of 80 ms.

RESQ_ATTEMPT_TIME – Call rescue attempt timer value.

If RESQ_ENABLED is set to '0', the base station shall omit this field; otherwise, the base station shall include this field and set it as follows:

The base station shall set this field to the value of the call rescue attempt timer to be used by the mobile station, in units of 40 ms.

RESQ_CODE_CHAN – Code channel index for the Rescue Channel.

If RESQ_ENABLED is set to '0', the base station shall omit this field; otherwise, the base station shall include this field and set it as follows:

The base station shall set this field to the code channel index (see [2]) that the mobile station is to use on the Forward Fundamental Channel when attempting Call Rescue Soft Handoff with the associated neighbor pilot.

If Radio Configuration 1, 2, 3, or 5 (see [2]) is used, the base station shall set this field in the range 1 to 63 inclusive. If Radio Configuration 4, 6, 8, 11, or 12 is used, the base station shall set this field in the range 1 to 127 inclusive. If Radio Configuration 7 or 9 is used, the base station shall set this field in the range 1 to 255 inclusive.

RESQ_QOF – Quasi-Orthogonal Function mask identifier for the Rescue Channel.

If RESQ_ENABLED is set to '0', the base station shall omit this field; otherwise, the base station shall include this field and set it as follows:

The base station shall set this field to the quasi-orthogonal function mask identifier (see [2]) that the mobile station is to use on the Forward Fundamental Channel when attempting Call Rescue Soft Handoff with the associated neighbor pilot.

RESQ_MIN_PERIOD_INCL – Minimum time between consecutive rescues included indicator.

If RESQ_ENABLED is set to '0', the base station shall omit this field; otherwise, the base station shall include this field and set it as follows:

The base station shall set this field to '1' if the RESQ_MIN_PERIOD field is included in this message; otherwise, the base station shall set this field to '0'.

This field is set to '0' if there is no minimum time restriction between consecutive rescues.

RESQ_MIN_PERIOD – Minimum time between consecutive rescues.

If RESQ_MIN_PERIOD_INCL is not included, or is included and set to '0', the base station shall omit this field; otherwise, the base station shall include this field and set it as follows:

The base station shall set this field to one less than the minimum time after a successful call rescue (i.e. receipt of N_{3m} good frames by the mobile station after the rescue attempt timer is enabled) before any subsequent call rescue attempts can be initiated, in units of 2 seconds.

RESQ_NUM_TOT_TRANS_INCL – The required number of transmissions before declaring L2 Acknowledgment Failure when Call Rescue is enabled included indicator.

If RESQ_ENABLED is set to '0', the base station shall omit this field; otherwise, the base station shall include this field and set it as follows:

If the required number of transmissions of a regular PDU and mini PDU before declaring L2 Acknowledgment Failure when Call Rescue is enabled is included in this message, the base station shall set this field to '1'; otherwise, the base station shall set this field to '0'.

RESQ_NUM_TOT_TRANS_20MS – The required number of transmissions of a regular PDU before declaring L2 Acknowledgment Failure when Call Rescue is enabled.

If RESQ_NUM_TOT_TRANS_INCL field is not included or is included and is set to '0', the base station shall omit this field; otherwise, the base station shall include this field and set it as follows:

The base station shall set this field to the required number of transmissions of a regular PDU before declaring L2 Acknowledgment Failure when Call Rescue is enabled.

The base station shall not set this field to a value greater than N_{1m}.

RESQ_NUM_TOT_TRANS_5MS – The required number of transmissions of a mini PDU before declaring L2 Acknowledgment Failure when Call Rescue is enabled.

If RESQ_NUM_TOT_TRANS_INCL field is not included or is included and is set to '0', the base station shall omit this field; otherwise, the base station shall include this field and set it as follows:

The base station shall set this field to the required number of transmissions of a mini PDU before declaring L2 Acknowledgment Failure when Call Rescue is enabled.

The base station shall not set this field to a value greater than N_{15m}.

RESQ_NUM_PREAMBLE_RC1_RC2 – The Traffic Channel preamble length for Call Rescue Soft Handoff when operating in Radio Configuration 1 or 2.

If RESQ_ENABLED is set to '0', the base station shall omit this field; otherwise, the base station shall include this field and set it to the length of Traffic Channel preamble, in 20 ms units, that the mobile station is to send when performing a call rescue soft handoff.

RESQ_NUM_PREAMBLE – The Traffic Channel preamble Length for Call Rescue Soft Handoff when operating in Radio Configuration greater than 2.

If RESQ_ENABLED is set to '0', the base station shall omit this field; otherwise, the base station shall include this field and set it to the length of Traffic Channel preamble that the mobile station is to send when performing a call rescue soft handoff, as follows:

The base station shall set this field to the value shown in Table 3.7.3.3.2.17-1 corresponding to the Traffic Channel preamble length in 1.25 ms units.

RESQ_POWER_DELTA – The power level adjustment to be applied to the last closed-loop power level when re-enabling the transmitter for call rescue soft handoff.

If RESQ_ENABLED is set to ‘0’, the base station shall omit this field; otherwise, the base station shall set this field to a value by which mobile stations are to adjust the last closed-loop power level when re-enabling the transmitter for call rescue, expressed as a two’s complement value in units of 1 dB.

The base station shall include NUM_NGHBR occurrences of the following one-field record if RESQ_ENABLED is set to ‘1’. The base station shall use the same order for the following field as is used for the NGHBR_PN fields listed in this message.

NGHBR_RESQ_CONFIGURED – Neighbor Rescue Channel configured indicator.

The base station shall set this field to ‘1’ if a Rescue Channel is configured for this neighbor pilot; otherwise, the base station shall set this field to ‘0’.

The base station shall include NUM_NGHBR occurrences of the following variable length record. The base station shall use the same order for the following field as is used for the NGHBR_PN fields listed in this message.

NGHBR_PDCH_SUPPORTED – Neighbor PDCH supported indicator.

The base station shall set this field to ‘1’ if PDCH is configured for this neighbor pilot; otherwise, the base station shall set this field to ‘0’.

HRPD_NGHBR_INCL - HRPD neighbor information included indicator.

If this message contains information on HRPD neighbors, the base station shall set this field to ‘1’; otherwise, the base station shall set this field to ‘0’.

NUM_HRPD_NGHBR - Number of HRPD neighbor pilot PN sequences.

If the HRPD_NGHBR_INCL field is set to ‘0’, the base station shall omit this field; otherwise, the base station shall include this field and set it to the number of HRPD neighbors included in the message.

The base station shall include one occurrence of the following subrecord for each pilot that a mobile station is to place in its HRPD Neighbor Set.

HRPD_NGHBR_REC_LEN - HRPD neighbor record length

The base station shall set this field to one less than the number of octets included in this HRPD neighbor record including this field.

NGHBR_PN - Neighbor pilot PN sequence offset index.

The base station shall set this field to the pilot PN sequence offset for this neighbor, in units of 64 PN chips.

NGHBR_FREQ_INCL - Neighbor frequency information included indicator.

The base station shall set this field to '1' if the neighbor frequency information is included in this message; otherwise, the base station shall set this field to '0'.

NGHBR_BAND - Neighbor band class.

If the NGHBR_FREQ_INCL field is set to '0', the base station shall omit this field; otherwise, the base station shall include this field and set it as follows:

The base station shall set this field to the CDMA band class, as specified in [30], corresponding to the CDMA frequency assignment for the CDMA Channel containing this neighbor.

NGHBR_FREQ - Neighbor frequency assignment.

If the NGHBR_FREQ_INCL field is set to '0', the base station shall omit this field; otherwise, the base station shall include this field and set it as follows:

The base station shall set this field to the CDMA Channel number, in the specified CDMA band class, corresponding to the CDMA frequency assignment for this neighbor.

PN_ASSOCIATION_IND - Neighbor PN association indicator.

The base station shall set this field to '1' if the system identified by this system record has the same PN assignment as the MC system to which this BS belongs; otherwise, the base station shall set this field to '0'.

DATA_ASSOCIATION_IND - Neighbor data association indicator.

The base station shall set this field to '1' if the system identified by this system record can reach the same set of PDSNs as the MC system to which this BS belongs; otherwise, the base station shall set this field to '0'.

HRPD_NGHBR_REC_RESERVED - HRPD neighbor record reserved bits.

The base station shall add reserved bits as needed in order to make the length of this record equal to an integer number of octets. The base station shall set these bits to '0'.

3.7.2.3.2.23 User Zone Identification Message

MSG_TAG: UZIM

Field	Length (bits)
PILOT_PN	9
CONFIG_MSG_SEQ	6
UZ_EXIT	4
NUM_UZID	4

NUM_UZID occurrences of the following record:

{ (NUM_UZID)

UZID	16
UZ_REV	4
TEMP_SUB	1

} (NUM_UZID)

PILOT_PN - Pilot PN sequence offset index.

The base station shall set this field to the pilot PN sequence offset for this base station, in units of 64 PN chips.

CONFIG_MSG_SEQ - Configuration message sequence number.

The base station shall set this field to CONFIG_SEQ (see 3.6.2.2).

UZ_EXIT - User Zone Exit parameter.

The base station shall set this field to the User Zone exit parameter (see 2.6.9.2.1). The base station shall set this field to a value (in dB) in the range 0 to 15.

NUM_UZID - Number of User Zone identifiers.

The base station shall set this field to the number of user zone identifiers included in this message.

The base station shall include NUM_UZID occurrences of the following record.

UZID - User Zone identifier.

The base station shall set this field to the User Zone identifier (see 3.6.7) supported by the base station.

UZ_REV - User Zone update revision number.

The base station shall set this field to the User Zone update revision number.

TEMP_SUB - Temporary subscription flag.

If the corresponding User Zone allows for temporary subscription, the base station shall set this field to ‘1’; otherwise, the base station shall set this field to ‘0’.

3.7.2.3.2.24 Private Neighbor List Message

MSG_TAG: PNLM

Field	Length (bits)
PILOT_PN	9
CONFIG_MSG_SEQ	6
NUM_RADIO_INTERFACE	4

NUM_RADIO_INTERFACE occurrences of the following record:

{ (NUM_RADIO_INTERFACE)

RADIO_INTERFACE_TYPE	4
RADIO_INTERFACE_LEN	8
Radio Interface Type-specific fields	8× RADIO_INTERFACE_LEN

} (NUM_RADIO_INTERFACE)

PILOT_PN - Pilot PN sequence offset index.

The base station shall set this field to the pilot PN sequence offset for this base station, in units of 64 PN chips.

CONFIG_MSG_SEQ - Configuration message sequence number.

The base station shall set this field to CONFIG_SEQ (see 3.6.2.2).

NUM_RADIO_INTERFACE - Number of interface types.

The base station shall set this field to the number of radio interface types for which private neighbors are included in this message.

The base station shall include NUM_RADIO_INTERFACE occurrences of the following record, one occurrence for each radio interface for which private neighbors are included in this message.

RADIO_INTERFACE_TYPE - The radio interface type.

The base station shall set this field to the radio interface type of this record as specified in Table 3.7.2.3.2.24-1.

Table 3.7.2.3.2.24-1. Radio Interface Type

RADIO_INTERFACE_TYPE (binary)	Descriptions
0000	MC system
0001-1111	Reserved

RADIO_INTERFACE_LEN - The length of the Radio Interface Type-specific fields.

The base station shall set this field to the number of octets in the Radio Interface Type-specific fields of this record.

If RADIO_INTERFACE_TYPE is equal to ‘0000’, the base station shall set the radio interface type-specific fields as follows:

Field	Length (bits)
COMMON_INCL	1
COMMON_BAND_CLASS	0 or 5
COMMON_NGHBR_FREQ	0 or 11
SRCH_WIN_PN	4
NUM_PRI_NGHBR	6

NUM_PRI_NGHBR occurrences of the following record:

{ (NUM_PRI_NGHBR)

SID	15
NID	16
PRI_NGHBR_PN	9
ADD_PILOT_REC_INCL	1
NGHBR_PILOT_REC_TYPE	0 or 3
RECORD_LEN	0 or 3
Type-specific fields	0 or 8× RECORD_LEN
BAND_CLASS	0 or 5
NGHBR_FREQ	0 or 11
UZID_INCL	1
NUM_UZID	0 or 4

(continues on next page)

Field	Length (bits)
NUM_UZID occurrences of the following subrecord:	
{ (NUM_UZID or 0)	
UZID	0 or 16
UZ_REV	0 or 4
TEMP_SUB	0 or 1
} (NUM_UZID or 0)	
} (NUM_PRI_NGHBR)	
RESERVED	0 - 7 (as needed)

COMMON_INCL - Common configuration included indicator.

If all private neighbor base stations included in this message are on the same CDMA band class and CDMA Channel number as specified in the COMMON_BAND_CLASS and COMMON_NGHBR_FREQ fields, the base station shall set this field to '1'; otherwise, the base station shall set this field to '0'.

COMMON_BAND_CLASS - Neighbor band class.

If COMMON_INCL is set to '1', the base station shall set this field to the CDMA band class as specified in [30] corresponding to the CDMA frequency assignment for the CDMA Channel containing the Paging Channel or the Forward Common Control Channel for all private neighbors; otherwise, the base station shall omit this field.

COMMON_NGHBR_FREQ - Neighbor frequency assignment.

If the COMMON_INCL bit is set to '1', the base station shall set this field to the CDMA Channel number, in the specified CDMA band class, corresponding to the CDMA frequency assignment for the CDMA Channel containing the Paging Channel or the Forward Common Control Channel for all private neighbor base station; otherwise, the base station shall omit this field.

SRCH_WIN_N - Search window size for the Private Neighbor Set.

The base station shall set this field to the value shown in Table 2.6.6.2.1-1 corresponding to the search window size to be used by mobile stations for the Private Neighbor Set.

NUM_PRI_NGHBR - Number of private neighbor pilot PN sequences.

The base station shall set this field to the number of private neighbors included in the message.

The base station shall include NUM_PRI_NGHBR occurrences of the following record.

SID - System Identification.

The base station shall set this field to the system identification number for this private neighbor system (see 2.6.5.2).

NID - Network Identification.

This field serves as a sub-identifier of a system as defined by the owner of the SID.

The base station shall set this field to the system identification number for this private neighbor network (see 2.6.5.2).

PRI_NGHBR_PN - Private neighbor pilot PN sequence offset index.

The base station shall set this field to the pilot PN sequence offset for this private neighbor, in units of 64 PN chips.

ADD_PILOT_REC_INCL - Additional pilot information included indicator.

The base station shall set this field to '1' if additional pilot information listed in the NGHBR_PILOT_REC_TYPE and RECORD_LEN fields are included. The base station shall set this field to '0' if the corresponding pilot is the common pilot and there is no additional pilot information included.

NGHBR_PILOT_REC_TYPE - Neighbor Pilot record type

If ADD_PILOT_REC_INCL is set to '1', the base station shall set this field to the NGHBR_PILOT_REC_TYPE value shown in Table 3.7.2.3.2.22-5 corresponding to the type of Pilot Record specified by this record.

If ADD_PILOT_REC_INCL is set to '0', the base station shall omit this field.

RECORD_LEN - Pilot record length.

If ADD_PILOT_REC_INCL is set to '1', the base station shall set this field to the number of octets in the type-specific fields of this pilot record.

If ADD_PILOT_REC_INCL is set to '0', the base station shall omit this field.

Type-specific fields - Pilot record type-specific fields.

If ADD_PILOT_REC_INCL is set to '1', the base station shall include type-specific fields based on the NGHBR_PILOT_REC_TYPE of this pilot record.

If ADD_PILOT_REC_INCL is set to '0', the base station shall omit this field.

If NGHBR_PILOT_REC_TYPE is equal to '000', the base station shall include the following fields:

Field	Length (bits)
TD_POWER_LEVEL	2
TD_MODE	2
RESERVED	4

TD_POWER_LEVEL - TD Transmit Power Level.

The base station shall set this field to the TD transmit power level relative to that of the Forward Pilot Channel as specified in Table 3.7.2.3.2.26-4.

TD_MODE - Transmit Diversity mode.

The base station shall set this field to the Transmit Diversity mode, as specified in Table 3.7.2.3.2.26-3.

RESERVED - Reserved bits.

The base station shall set this field to '0000'.

If NGHBR_PILOT_REC_TYPE is equal to '001', the base station shall include the following fields:

Field	Length (bits)
QOF	2
WALSH_LENGTH	3
AUX_PILOT_WALSH	WALSH_LENGTH+6
RESERVED	0 to 7 (as needed)

QOF - Quasi-orthogonal function index.

The base station shall set this field to the index of the Quasi-orthogonal function (see [2]).

WALSH_LENGTH - Length of the Walsh Code.

The base station shall set this field to the WALSH_LENGTH value shown in Table 3.7.2.3.2.22–6 corresponding to the length of the Walsh code for the pilot that is used in as the Auxiliary pilot.

AUX_PILOT_WALSH - Walsh Code for the Auxiliary Pilot.

The base station shall set this field to the Walsh code corresponding to the Auxiliary pilot.

RESERVED - Reserved bits.

The base station shall set all the bits of this field to '0' to make the entire record octet-aligned.

If NGHBR_PILOT_REC_TYPE is equal to '010', the base station shall include the following fields:

Field	Length (bits)
QOF	2
WALSH_LENGTH	3
AUX_WALSH	WALSH_LENGTH+6
AUX_TD_POWER_LEVEL	2
TD_MODE	2
RESERVED	0 to 7 (as needed)

QOF - Quasi-orthogonal function index for the Auxiliary Transmit Diversity Pilot.

The base station shall set this field to the index of the Quasi-orthogonal function (see [2]).

WALSH_LENGTH - Length of the Walsh Code.

The base station shall set this field to the WALSH_LENGTH value shown in 3.7.2.3.2.22-6 corresponding to the length of the Walsh code for the pilots that are used as Auxiliary pilot in the transmit diversity mode.

AUX_WALSH - Walsh Code for the Auxiliary Pilot.

The base station shall set this field to the Walsh code corresponding to the Auxiliary Pilot.

AUX_TD_POWER_LEVEL - Auxiliary Transmit Diversity Pilot Power Level.

The base station shall set this field to the Auxiliary Transmit Diversity Pilot transmit power level relative to that of the Auxiliary Pilot as specified in Table 3.7.2.3.2.22-7.

TD_MODE - Transmit Diversity mode.

The base station shall set this field to the Transmit Diversity mode, as specified in Table 3.7.2.3.2.26-3.

RESERVED - Reserved bits.

The base station shall set all the bits of this field to ‘0’ to make the entire record octet-aligned.

If NGHBR_PILOT_REC_TYPE is equal to ‘011’, the base station shall include the following fields:

Field	Length (bits)
SR3_PRIMARY_PILOT	2
SR3_PILOT_POWER1	3
SR3_PILOT_POWER2	3

SR3_PRIMARY_PILOT – Primary SR3 pilot.

The base station shall set this field to the value shown in Table 3.7.2.3.2.26-5 corresponding to the position of the primary SR3 pilot.

SR3_PILOT_POWER1 – The primary SR3 pilot power level relative to that of the pilot on the lower frequency of the two remaining SR3 frequencies.

The base station shall set this field to the value shown in Table 3.7.2.3.2.26-6 corresponding to the power level of the primary pilot with respect to the pilot on the lower frequency of the two remaining SR3 frequencies.

SR3_PILOT_POWER2 – The primary SR3 pilot power level relative to that of the pilot on the higher frequency of the two remaining SR3 frequencies.

The base station shall set this field to the value shown in Table 3.7.2.3.2.26-6 corresponding to the power level of the primary pilot with respect to the pilot on the higher frequency of the two remaining SR3 frequencies.

If NGHBR_PILOT_REC_TYPE is equal to '100', the base station shall include the following fields:

Field	**Length (bits)**
SR3_PRIMARY_PILOT	2
SR3_PILOT_POWER1	3
SR3_PILOT_POWER2	3
QOF	2
WALSH_LENGTH	3
AUX_PILOT_WALSH	WALSH_LENGTH+6
ADD_INFO_INCL1	1
QOF1	0 or 2
WALSH_LENGTH1	0 or 3
AUX_PILOT_WALSH1	0 or WALSH_LENGTH1+6
ADD_INFO_INCL2	1
QOF2	0 or 2
WALSH_LENGTH2	0 or 3
AUX_PILOT_WALSH2	0 or WALSH_LENGTH2+6
RESERVED	0 – 7 (as needed)

SR3_PRIMARY_PILOT – Primary SR3 pilot.

The base station shall set this field to the value shown in Table 3.7.2.3.2.26-5 corresponding to the position of the primary SR3 pilot.

SR3_PILOT_POWER1 – The primary SR3 pilot power level relative to that of the pilot on the lower frequency of the two remaining SR3 frequencies.

The base station shall set this field to the value shown in Table 3.7.2.3.2.26-6 corresponding to the power level of the primary pilot with respect to the pilot on the lower frequency of the two remaining SR3 frequencies.

SR3_PILOT_POWER2 – The primary SR3 pilot power level relative to that of the pilot on the higher frequency of the two remaining SR3 frequencies.

The base station shall set this field to the value shown in Table 3.7.2.3.2.26-6 corresponding to the power level of the primary pilot with respect to the pilot on the higher frequency of the two remaining SR3 frequencies.

QOF - Quasi-orthogonal function index.

The base station shall set this field to the index of the Quasi-orthogonal function (see [2]) on the frequency of the primary pilot.

WALSH_LENGTH - Length of the Walsh Code.

The base station shall set this field to the WALSH_LENGTH value shown in Table 3.7.2.3.2.22–6 corresponding to the length of the Walsh code for the pilot that is used as the Auxiliary pilot on the frequency of the primary pilot.

AUX_PILOT_WALSH - Walsh Code for the Auxiliary Pilot.

The base station shall set this field to the Walsh code corresponding to the Auxiliary pilot on the frequency of the primary pilot.

ADD_INFO_INCL1 - Additional information included for the pilot on the lower frequency of the two remaining SR3 frequencies.

If the additional information for the pilot on the lower frequencies of the two remaining SR3 frequencies is the same as pilot on the primary frequency, the base station shall set this field to ‘0’; otherwise, the base station shall set this field to ‘1’.

QOF1 - Quasi-orthogonal function index for the pilot on the lower frequency of the two remaining SR3 frequencies.

If ADD_INFO_INCL1 is set to ‘0’, the base station shall omit this field; otherwise, the base station shall set this field as follows:

The base station shall set this field to the index of the Quasi-orthogonal function (see [2]) on the lower frequency of the two remaining SR3 frequencies.

WALSH_LENGTH1 - Length of the Walsh Code for the pilot on the lower frequency of the two remaining SR3 frequencies.

If ADD_INFO_INCL1 is set to ‘0’, the base station shall omit this field; otherwise, the base station shall set this field as follows:

The base station shall set this field to the WALSH_LENGTH value shown in Table 3.7.2.3.2.22–6 corresponding to the length of the Walsh code for the pilot that is used as the Auxiliary pilot on the lower frequency of the two remaining SR3 frequencies.

AUX_PILOT_WALSH1 - Walsh Code for the Auxiliary Pilot on the lower frequency of the two remaining SR3 frequencies.

If ADD_INFO_INCL1 is set to ‘0’, the base station shall omit this field; otherwise, the base station shall set this field as follows:

The base station shall set this field to the Walsh code corresponding to the Auxiliary pilot on the lower frequency of the two remaining SR3 frequencies.

ADD_INFO_INCL2 - Additional information included for the pilot on the higher frequency of the two remaining SR3 frequencies.

If the additional information for the pilot on the higher frequencies of the two remaining SR3 frequencies is the same as pilot on the primary frequency, the base station shall set this field to ‘0’; otherwise, the base station shall set this field to ‘1’.

QOF2 - Quasi-orthogonal function index for the pilot on the higher frequency of the two remaining SR3 frequencies.

If ADD_INFO_INCL2 is set to ‘0’, the base station shall omit this field; otherwise, the base station shall set this field as follows:

The base station shall set this field to the index of the Quasi-orthogonal function (see [2]) on the higher frequency of the two remaining SR3 frequencies.

WALSH_LENGTH2 - Length of the Walsh Code for the pilot on the higher frequency of the two remaining SR3 frequencies.

If ADD_INFO_INCL2 is set to ‘0’, the base station shall omit this field; otherwise, the base station shall set this field as follows:

The base station shall set this field to the WALSH_LENGTH value shown in Table 3.7.2.3.2.22–6 corresponding to the length of the Walsh code for the pilot that is used as the Auxiliary pilot on the higher frequency of the two remaining SR3 frequencies.

AUX_PILOT_WALSH2 - Walsh Code for the Auxiliary Pilot on the higher frequency of the two remaining SR3 frequencies.

If ADD_INFO_INCL2 is set to ‘0’, the base station shall omit this field; otherwise, the base station shall set this field as follows:

The base station shall set this field to the Walsh code corresponding to the Auxiliary pilot on the higher frequency of the two remaining SR3 frequencies.

RESERVED - Reserved bits.

The base station shall set all the bits of this field to ‘0’ to make the entire record octet-aligned.

BAND_CLASS - Neighbor band class.

If COMMON_INCL is set to ‘0’, the base station shall set this field to the CDMA band class as specified in [30] corresponding to the CDMA frequency assignment for the CDMA Channel containing the Paging Channel for the private neighbor; otherwise, the base station shall omit this field.

NGHBR_FREQ - Neighbor frequency assignment.

If the COMMON_INCL bit is set to ‘0’, the base station shall set this field to the CDMA Channel number, in the specified CDMA band class, corresponding to the CDMA frequency assignment for the CDMA Channel containing the Paging Channel for the private neighbor base station; otherwise, the base station shall omit this field.

UZID_INCL - User Zone identifier included indicator.

If the UZID information is included, the base station shall set this field to ‘1’; otherwise, the base station shall set this field to ‘0’.

NUM_UZID - Number of User Zone identifiers.

If UZID_INCL is set to ‘1’, the base station shall set this field to the number of occurrences of UZID supported by the private neighbor base station; otherwise, the base station shall omit this field.

If UZID_INCL is set to ‘1’, the base station shall include NUM_UZID occurrences of the following three-field subrecord; otherwise, the base station shall omit this subrecord.

UZID - User Zone identifiers.

The base station shall set this field to the User Zone identifier supported by the private neighbor base station.

UZ_REV - User Zone update revision number.

The base station shall set this field to the User Zone update revision number.

TEMP_SUB - Temporary subscription flag.

If the corresponding User Zone allows for temporary subscription, the base station shall set this field to ‘1’; otherwise, the base station shall set this field to ‘0’.

RESERVED - Reserved bits.

The base station shall add reserved bits as needed in order to make the length of the entire record equal to an integer number of octets. The base station shall set these bits to '0'.

3.7.2.3.2.25 Reserved

3.7.2.3.2.26 Sync Channel Message

MSG_TAG: SCHM

Field	Length (bits)
P_REV	8
MIN_P_REV	8
SID	15
NID	16
PILOT_PN	9
LC_STATE	42
SYS_TIME	36
LP_SEC	8
LTM_OFF	6
DAYLT	1
PRAT	2
CDMA_FREQ	11
EXT_CDMA_FREQ	11
SR1_BCCH_NON_TD_INCL	1
SR1_NON_TD_FREQ_INCL	0 or 1
SR1_CDMA_FREQ_NON_TD	0 or 11
SR1_BRAT_NON_TD	0 or 2
SR1_CRAT_NON_TD	0 or 1
SR1_BCCH_CODE_CHAN_NON_TD	0 or 6
SR1_TD_INCL	1
SR1_CDMA_FREQ_TD	0 or 11
SR1_BRAT_TD	0 or 2
SR1_CRAT_TD	0 or 1
SR1_BCCH_CODE_CHAN_TD	0 or 6

(continues on next page)

Field	Length (bits)
SR1_TD_MODE	0 or 2
SR1_TD_POWER_LEVEL	0 or 2
SR3_INCL	1
SR3_CENTER_FREQ_INCL	0 or 1
SR3_CENTER_FREQ	0 or 11
SR3_BRAT	0 or 2
SR3_BCCH_CODE_CHAN	0 or 7
SR3_PRIMARY_PILOT	0 or 2
SR3_PILOT_POWER1	0 or 3
SR3_PILOT_POWER2	0 or 3
DS_INCL	1
DS_BLOB	0 or 24

P_REV - Protocol revision level.

The base station shall set this field to '00001100'.

MIN_P_REV - Minimum protocol revision level.

The base station sets this field to prevent mobile stations which cannot be supported by the base station from accessing the system.

The base station shall set this field to the minimum protocol revision level that it supports.

SID - System identification.

The base station shall set this field to the system identification number for this system (see 2.6.5.2).

NID - Network identification.

This field serves as a sub-identifier of a system as defined by the owner of the SID.

The base station shall set this field to the network identification number for this network (see 2.6.5.2).

PILOT_PN - Pilot PN sequence offset index.

The base station shall set this field to the pilot PN sequence offset for this base station, in units of 64 PN chips.

LC_STATE - Long code state.

The base station shall set this field to the long code state at the time given by the SYS_TIME field of this message.

SYS_TIME - System time.

The base station shall set this field to the System Time as of four Sync Channel superframes (320 ms) after the end of the last superframe containing any part of this *Sync Channel Message*, minus the pilot PN sequence offset, in units of 80 ms (see [2]).

LP_SEC - The number of leap seconds that have occurred since the start of System Time.

The base station shall set this field to the number of leap seconds that have occurred since the start of System Time, as of the time given by the SYS_TIME field of this message.

LTM_OFF - Offset of local time from System Time.

The base station shall set this field to the two's complement offset of local time from System Time, in units of 30 minutes.

The local time of day, in units of 80 ms, as of four Sync Channel superframes (320 ms) after the end of the last superframe containing any part of this *Sync Channel Message*, minus the pilot PN sequence offset, is equal to SYS_TIME - (LP_SEC × 12.5) + (LTM_OFF × 22500).

DAYLT - Daylight savings time indicator.

If daylight savings time is in effect, the base station shall set this field to '1'; otherwise, the base station shall set this field to '0'.

PRAT - Paging Channel data rate.

The base station shall set this field to the PRAT field value shown in Table 3.7.2.3.2.26-1 corresponding to the data rate used by the Paging Channels in the system.

Table 3.7.2.3.2.26-1. Paging Channel Data Rate

PRAT Field (binary)	Paging Channel data rate
00	9600 bps
01	4800 bps
10	Reserved
11	Reserved

CDMA_FREQ - Frequency assignment.

The base station shall set this field to the CDMA Channel number corresponding to the CDMA frequency assignment for the CDMA Channel containing a Primary Paging Channel.[11]

EXT_CDMA_FREQ - Extended frequency assignment.

The base station shall set this field to the CDMA Channel number corresponding to the CDMA frequency assignment for the CDMA Channel containing a Primary Paging Channel that a mobile station capable of Radio Configurations greater than 2 or capable of supporting Quick Paging Channel will use.

SR1_BCCH_NON_TD_INCL - Common Channel in non TD mode on Spreading Rate 1 information included indicator.

The base station shall set this field to '1' if the base station includes common channels (BCCH/F-CCCH/EACH) information in non TD mode; otherwise, the base station shall set this field to '0'.

SR1_NON_TD_FREQ_INCL - Non Transmit Diversity frequency included indicator.

If SR1_BCCH_NON_TD_INCL is set to '0', the base station shall omit this field; otherwise, the base station shall set this field as follows:

The base station shall set this field to '1' if SR1_CDMA_FREQ_NON_TD is included in the message. The base station shall set this field to '0' if the frequency specified by the EXT_CDMA_FREQ field is used for BCCH frequency assignment.

SR1_CDMA_FREQ_NON_TD - Frequency assignment for non-transmit diversity operation.

If SR1_NON_TD_FREQ_INCL is not included, or is included and set to '0', the base station shall omit this field; otherwise, the base station shall set this field as follows:

The base station shall set this field to the CDMA Channel number corresponding to the CDMA frequency assignment for the CDMA Channel containing a Broadcast Control Channel that does not support the TD operation.

SR1_BRAT_NON_TD - BCCH data rate in non-TD mode for Spreading Rate 1.

If SR1_BCCH_NON_TD_INCL is set to '0', the base station shall omit this field; otherwise, the base station shall set this field as follows:

[11] If compatibility with IS-95-A mobile stations is desired in a Band Class 0 system, the CDMA_FREQ field is set to the CDMA frequency assignment containing this Sync Channel.

The base station shall set this field to the BRAT field value shown in Table 3.7.2.3.2.26-2 corresponding to the data rate used by the Primary Broadcast Control Channel in the system.

Table 3.7.2.3.2.26-2. Broadcast Control Channel Data Rate

BRAT Field (binary)	Broadcast Control Channel data rate
00	4800 bps
01	9600 bps
10	19200bps
11	Reserved

SR1_CRAT_NON_TD – BCCH code rate in non Transmit Diversity mode for Spreading Rate 1.

If SR1_BCCH_NON_TD_INCL is set to ‘0’, the base station shall omit this field; otherwise, the base station shall set this field as follows:

The base station shall set this field to ‘0’ if the BCCH Code Rate is 1/4 (see [2]). The base station shall set this field to ‘1’ if the BCCH code rate is 1/2 (see [2]).

SR1_BCCH_CODE_CHAN_NON_TD – Walsh code for the Spreading Rate 1 BCCH in non Transmit Diversity mode.

If SR1_BCCH_NON_TD_INCL is set to ‘0’, the base station shall omit this field; otherwise, the base station shall set this field as follows:

The base station shall set this field to the Walsh code corresponding to the Spreading Rate 1 BCCH in non Transmit Diversity mode.

SR1_TD_INCL - Spreading Rate 1 Transmit Diversity frequency information included indicator.

The base station shall set this field to ‘1’ if SR1_CDMA_FREQ_TD, SR1_BRAT_TD, SR1_CRAT_TD, SR1_TD_MODE, and SR1_TD_POWER_LEVEL are included in the message; otherwise, the base station shall set this field to ‘0’.

SR1_CDMA_FREQ_TD - Spreading Rate 1 frequency assignment for Transmit Diversity operation.

If SR1_TD_INCL is set to ‘0’, the base station shall omit this field; otherwise, the base station shall set this field as follows:

The base station shall set this field to the CDMA Channel number corresponding to the CDMA frequency assignment for the CDMA Channel containing a BCCH Channel that supports the TD operation.

SR1_BRAT_TD - BCCH data rate in Transmit Diversity mode for Spreading Rate 1.

If SR1_TD_INCL is set to '0', the base station shall omit this field; otherwise, the base station shall set this field as follows:

The base station shall set this field to the BRAT field value shown in Table 3.7.2.3.2.26-2 corresponding to the data rate used by the Primary Broadcast Control Channel in the system.

SR1_CRAT_TD – BCCH code rate in Transmit Diversity mode for Spreading Rate 1.

If SR1_TD_INCL is set to '0', the base station shall omit this field; otherwise, the base station shall set this field as follows:

The base station shall set this field to '0' if the BCCH Code Rate is 1/4 (see [2]). The base station shall set this field to '1' if the BCCH Code Rate is 1/2 (see [2]).

SR1_BCCH_CODE_CHAN_TD – Walsh code for the Spreading Rate 1 BCCH in Transmit Diversity mode.

If SR1_TD_INCL is set to '0', the base station shall omit this field; otherwise, the base station shall set this field as follows:

The base station shall set this field to the Walsh code corresponding to the Spreading Rate 1 BCCH in Transmit Diversity mode.

SR1_TD_MODE - Spreading Rate 1 Transmit Diversity Mode.

If SR1_TD_INCL is set to '0', the base station shall omit this field; otherwise, the base station shall set this field as follows:

The base station shall set this field corresponding to Table 3.7.2.3.2.26-3.

Table 3.7.2.3.2.26-3. TD Mode

TD_MODE	Descriptions
00	OTD (Orthogonal Transmit Diversity) mode
01	STS (Space Time Spreading) mode
10-11	Reserved

SR1_TD_POWER_LEVEL - Spreading Rate 1 TD transmit power level.

If SR1_TD_INCL is set to '0', the base station shall omit this field; otherwise, the base station shall set this field as follows:

The base station shall set this field to the TD transmit power level relative to that of the Forward Pilot Channel, as specified in Table 3.7.2.3.2.26-4.

Table 3.7.2.3.2.26-4. TD Transmit Power Level

TD_POWER_LEVEL	Transmit Power Level
00	9 dB below the Forward Pilot Channel transmit power
01	6 dB below the Forward Pilot Channel transmit power
10	3 dB below the Forward Pilot Channel transmit power
11	Same as the Forward Pilot Channel transmit power

SR3_INCL - Spreading Rate 3 information included indicator.

The base station shall set this field to '1' if the Spreading Rate 3 information is included in this message; otherwise, the base station shall set this field to '0'.

SR3_CENTER_FREQ_INCL - Center SR3 frequency assignment included.

If SR3_INCL is set to '0', the base station shall omit this field; otherwise, the base station shall set this field as follows:

The base station shall set this field to '1', if the CDMA Channel number corresponding to the SR3 center frequency assignment for the CDMA Channel containing a Broadcast Control Channel is different to EXT_CDMA_FREQ. Otherwise, the base station shall set this field to '0'.

SR3_CENTER_FREQ - Center SR3 frequency assignment.

If SR3_CENTER_FREQ_INCL is not included or is included but is set to '0', the base station shall omit this field; otherwise, the base station shall set this field as follows:

The base station shall set this field to the CDMA Channel number corresponding to the SR3 center frequency assignment for the CDMA Channel containing a Broadcast Control Channel.

SR3_BRAT – Spreading Rate 3 BCCH data rate.

If SR3_INCL is set to '0', the base station shall omit this field; otherwise, the base station shall set this field as follows:

The base station shall set this field to the BCCH rate field value shown in Table 3.7.2.3.2.26-2 corresponding to the data rate used by the Primary Broadcast Control Channel in the system.

SR3_BCCH_CODE_CHAN – Spreading Rate 3 BCCH Walsh code.

If SR3_INCL is set to '0', the base station shall omit this field; otherwise, the base station shall set this field as follows:

The base station shall set this field to the Walsh code corresponding to the Spreading Rate 3 BCCH.

SR3_PRIMARY_PILOT – Primary SR3 pilot.

If SR3_INCL is set to ‘0’, the base station shall omit this field; otherwise, the base station shall set this field as follows:

The base station shall set this field to the value shown in Table 3.7.2.3.2.26-5 corresponding to the position of the primary SR3 pilot.

Table 3.7.2.3.2.26-5. The Position of the Primary SR3 Pilot

SR3_PRIMARY_PILOT (Binary)	Position
00	The primary pilot is on the lowest SR3 frequency
01	The primary pilot is on the center SR3 frequency
10	The primary pilot is on the highest SR3 frequency
11	Reserved

SR3_PILOT_POWER1 – The primary SR3 pilot power level relative to that of the pilot on the lower frequency of the two remaining SR3 frequencies.

If SR3_INCL is set to ‘0’, the base station shall omit this field; otherwise, the base station shall set this field to the value shown in Table 3.7.2.3.2.26-6 corresponding to the power level of the primary pilot with respect to the pilot on the lower frequency of the two remaining SR3 frequencies.

Table 3.7.2.3.2.26-6. Pilot Transmission Power

SR3_PILOT_POWER1, SR3_PILOT_POWER2 (Binary)	Relative Transmission Power
000	0dB
001	1dB
010	2dB
011	3dB
100	4dB
101	5dB
110	6dB
111	7dB

SR3_PILOT_POWER2 – The primary SR3 pilot power level relative to that of the pilot on the higher frequency of the two remaining SR3 frequencies.

If SR3_INCL is set to ‘0’, the base station shall omit this field; otherwise, the base station shall set this field to the value shown in Table 3.7.2.3.2.26-6 corresponding to the power level of the primary pilot with respect to the pilot on the higher frequency of the two remaining SR3 frequencies.

DS_INCL - Direct Spread (DS) System and Information Available.

If the base station is a pilot beacon and includes the DS_BLOB field (containing information on how to access a DS system, see [32]), the base station shall set this field to ‘1’; otherwise the base shall set this field to ‘0’.

DS_BLOB - Access Information about a Direct Spread (DS) System.

If DS_INCL is set to ‘1’, the base station shall include this field and set it as described in [32].

If DS_INCL is set to ‘0’, the base station shall omit this field.

3.7.2.3.2.27 Extended Global Service Redirection Message

MSG_TAG: EGSRDM

Field	Length (bits)
PILOT_PN	9
CONFIG_MSG_SEQ	6
REDIRECT_ACCOLC	16
RETURN_IF_FAIL	1
DELETE_TMSI	1
REDIRECT_P_REV_INCL	1
EXCL P_REV_IND	0 or 1
REDIRECT_P_MIN	0 or 8
REDIRECT_P_MAX	0 or 8
RECORD_TYPE	8
RECORD_LEN	8
Type-specific fields	8 × RECORD_LEN
LAST_SEARCH_RECORD_IND	1
NUM_ADD_RECORD	3

{(NUM_ADD_RECORD)

ADD_REDIRECT_ACCOLC	16
ADD_DELETE_TMSI	1
ADD_REDIRECT_P_REV_INCL	1
ADD_EXCL P_REV_IND	0 or 1
ADD_REDIRECT_P_MIN	0 or 8
ADD_REDIRECT_P_MAX	0 or 8
ADD_RECORD_TYPE	8
ADD_RECORD_LEN	8
Type-specific fields	8 × ADD_RECORD_LEN
ADD_LAST_SEARCH_RECORD_IND	1

}(NUM_ADD_RECORD)

PILOT_PN - Pilot PN sequence offset index.

The base station shall set this field to the pilot PN sequence offset for this base station, in units of 64 PN chips.

CONFIG_MSG_SEQ - Configuration message sequence number.

The base station shall set this field to CONFIG_SEQ (see 3.6.2.2).

REDIRECT_ACCOLC - Redirected access overload classes.

See REDIRECT_ACCOLC field defined in 3.7.2.3.2.18.

The base station shall set the subfields corresponding to the access overload classes of mobile stations which are to be redirected to '1', and shall set the remaining subfields to '0'.

RETURN_IF_FAIL - Return if fail indicator.

The base station shall set this field to '1' if the mobile station is required to return to the system from which it is being redirected upon failure to obtain service after attempting all qualified redirection records in this message; otherwise, the base station shall set this field to '0'.

DELETE_TMSI - Delete TMSI indicator.

The base station shall set this field to '1' if the mobile station is required to delete the TMSI assigned to the mobile station; otherwise, the base station shall set this field to '0'.

REDIRECT_P_REV_INCL - Redirection mobile protocol revision included.

If the redirection specified in this message applies to the mobile stations of some specific protocol revisions, the base station shall set this field to '1'; otherwise, if this redirection applies to all mobile stations, the base station shall set this field to '0'.

EXCL_P_REV_IND - Excluding mobile protocol revision indicator.

If the REDIRECT_P_REV_INCL is set to '1', the base station shall include this field and set this field as described below; otherwise, the base station shall omit this field.

If mobile stations with MOB_P_REV in the range between REDIRECT_P_MIN and REDIRECT_P_MAX inclusive are excluded from this Global Service Redirection, the base station shall set this field to '1'. Otherwise, if the mobile stations with MOB_P_REV in the protocol revision range specified in REDIRECT_P_MIN and REDIRECT_P_MAX are subjected to the redirection, the base station shall set this field to '0'.

REDIRECT_P_MIN - Minimum redirection protocol revision.

If REDIRECT_P_REV_INCL is set to '0', the base station shall omit this field; otherwise, the base station shall include this field and set it as follows.

The base station shall set this field to the minimum protocol revision of which mobile stations are subjected to as specified by the action contained in EXCL_P_REV_IND (i.e., to be redirected or excluded from redirection). The base station shall set this field to a protocol revision equal to or greater than six.

REDIRECT_P_MAX - Maximum redirection protocol revision.

If REDIRECT_P_REV_INCL is set to '0', the base station shall omit this field; otherwise, the base station shall include this field and set it as follows.

The base station shall set this field to the maximum protocol revision of which mobile stations are subjected to as specified by the action contained in EXCL_P_REV_IND (i.e., to be redirected or excluded from redirection). The base station shall set this field to a protocol revision equal to or greater than six.

RECORD_TYPE - Redirection record type.

The base station shall set this field to the RECORD_TYPE value shown in Table 3.7.2.3.2.16-2 corresponding to the type of redirection specified by this record.

RECORD_LEN - Redirection record length.

The base station shall set this field to the number of octets in the type-specific fields of this redirection record.

Type-specific fields - Redirection record type-specific fields.

The base station shall include type-specific fields based on the RECORD_TYPE of this redirection record, as specified below.

LAST_SEARCH_RECORD_IND - Last search record indicator.

The base station shall set this field to '0' if the mobile station is to attempt redirection per the next qualified redirection record in the message following failure to acquire the target system for the current redirection record; otherwise, the base station shall set this field to '1'.

NUM_ADD_RECORD - Number of additional redirection records.

The base station shall set this field to the number of additional redirection records.

The base station shall include NUM_ADD_RECORD occurrences of the following variable length additional redirection record.

ADD_REDIRECT_ACCOLC - Additional redirected access overload classes.

See REDIRECT_ACCOLC field defined in 3.7.2.3.2.18.

The base station shall set the subfields corresponding to the access overload classes of mobile stations which are to be redirected to ‘1’ and shall set the remaining subfields to ‘0’.

ADD_DELETE_TMSI - Additional delete TMSI indicator.

The base station shall set this field to ‘1’ if the mobile station is required to delete the TMSI assigned to the mobile station; otherwise, the base station shall set this field to ‘0’.

ADD_REDIRECT_P_REV_INCL - Additional redirection mobile protocol revision included.

If the redirection specified in this message applies to the mobile stations of some specific protocol revisions, the base station shall set this field to ‘1’; otherwise, if this redirection applies to all mobile stations, the base station shall set this field to ‘0’.

ADD_EXCL_P_REV_IND - Additional excluding mobile protocol revision indicator.

If the ADD_REDIRECT_P_REV_INCL is set to '1', the base station shall include this field and set this field as described below; otherwise, the base station shall omit this field.

If mobile stations with MOB_P_REV in the range between ADD_REDIRECT_P_MIN and ADD_REDIRECT_P_MAX inclusive are excluded from this global service redirection, the base station shall set this field to '1'. Otherwise, if the mobile stations with MOB_P_REV in the protocol revision range specified in ADD_REDIRECT_P_MIN and ADD_REDIRECT_P_MAX are subjected to the redirection, the base station shall set this field to '0'.

ADD_REDIRECT_P_MIN - Additional minimum redirection protocol revision.

If ADD_REDIRECT_P_REV_INCL is set to '0', the base station shall omit this field; otherwise, the base station shall include this field and set it as follows.

The base station shall set this field to the minimum protocol revision of which mobile stations are subjected to as specified by the action contained in ADD_EXCL_P_REV_IND (i.e., to be redirected or excluded from redirection). The base station shall set this field to a protocol revision equal to or greater than six.

ADD_REDIRECT_P_MAX - Additional maximum redirection protocol revision.

If ADD_REDIRECT_P_REV_INCL is set to '0', the base station shall omit this field; otherwise, the base station shall include this field and set it as follows.

The base station shall set this field to the maximum protocol revision of which mobile stations are subjected to as specified by the action contained in ADD_EXCL_P_REV_IND (i.e., to be redirected or excluded from redirection). The base station shall set this field to a protocol revision equal to or greater than six.

ADD_RECORD_TYPE - Additional redirection record type.

The base station shall set this field to the RECORD_TYPE value shown in Table 3.7.2.3.2.16-2 corresponding to the type of redirection specified by this record.

ADD_RECORD_LEN - Additional redirection record length.

The base station shall set this field to the number of octets in the type-specific fields of this redirection record.

Type-specific fields - Redirection record type-specific fields.

The base station shall include type-specific fields based on the ADD_RECORD_TYPE of this redirection record, as specified below.

ADD_LAST_SEARCH_RECORD_IND - Additional last search record indicator.

The base station shall set this field to '0' if the mobile station is to attempt redirection per the next qualified redirection record in the message following failure to acquire the target system for the current redirection record; otherwise, the base station shall set this field to '1'.

If RECORD_TYPE or ADD_RECORD_TYPE is equal to ‘00000010’, the base station shall include the following type specific fields:

Subfield	**Length (bits)**
BAND_CLASS	5
EXPECTED_SID	15
EXPECTED_NID	16
RESERVED	4
NUM_CHANS	4

NUM_CHANS occurrences of the following field:

{ (NUM_CHANS)

CDMA_CHAN	11

} (NUM_CHANS)

SUBCLASS_INFO_INCL	1
SUBCLASS_REC_LEN	0 or 5

SUBCLASS_REC_LEN + 1 occurrences of the following subrecord:

{ (SUBCLASS_REC_LEN + 1)

REDIRECT_SUBCLASS	1

} (SUBCLASS_REC_LEN + 1)

RESERVED	0 - 7 (as needed)

BAND_CLASS - Band class.

The base station shall set this field to the CDMA band class, as specified in [30].

EXPECTED_SID - Expected SID.

If the base station is redirecting the mobile station to a specific system, the base station shall set this field to the SID of that system; otherwise, the base station shall set this field to ‘0’.

EXPECTED_NID - Expected NID.

If the base station is redirecting the mobile station to a specific network, the base station shall set this field to the NID of that network; otherwise, the base station shall set this field to 65535.

RESERVED - Reserved bits.

The base station shall set this field to '0'

NUM_CHANS - Number of CDMA Channels.

The base station shall set this field to the number of occurrences of the CDMA_CHAN field in this record.

CDMA_CHAN - CDMA Channel number.

For each CDMA Channel on which the mobile station is to attempt to acquire a CDMA system, the base station shall include one occurrence of this field specifying the associated CDMA Channel number.

SUBCLASS_INFO_INCL - Band subclass information included

The base station shall set this field to '0' when band subclass information is not included for the redirection record; otherwise, the base station shall set this field to '1'.

SUBCLASS_REC_LEN - Band subclass subrecord length

If SUBCLASS_INFO_INCL is set to '0', the base station shall omit this field; otherwise, the base station shall set this field as follows:

The base station shall set this field to the number of redirection band subclass indicator fields included in the subrecord minus one. The number of redirection band subclass indicator fields included is limited to the highest band subclass associated with this redirection record (i.e. if the highest band subclass is K, then SUBCLASS_REC_LEN = K).

If the SUBCLASS_REC_LEN field is included, the base station shall include SUBCLASS_REC_LEN + 1 occurrences of the following subrecord. The first field included corresponds to band subclass '0' and the Nth field included corresponds to band subclass 'N-1'.

REDIRECT_SUBCLASS - Redirection band subclass indicator

The base station shall set this field to '1' if the corresponding band subclass is associated with this redirection record; otherwise, the base station shall set this field to '0'.

RESERVED - Reserved bits.

The base station shall add reserved bits as needed in order to make the length of the entire record equal to an integer number of octets. The base station shall set these bits to '0'.

3.7.2.3.2.28 Extended CDMA Channel List Message

MSG_TAG: ECCLM

Field	Length (bits)
PILOT_PN	9
CONFIG_MSG_SEQ	6
NUM_FREQ	4

NUM_FREQ occurrences of the following field:

{ (NUM_FREQ)

CDMA_FREQ	11

} (NUM_FREQ)

RC_QPCH_SEL_INCL	1

If RC_QPCH_SEL_INCL is equal to '1', include NUM_FREQ occurrences of the following field:

{ (NUM_FREQ)

RC_QPCH_HASH_IND	1

} (NUM_FREQ)

TD_SEL_INCL	1
TD_MODE	0 or 2

If TD_SEL_INCL is equal to '1', include NUM_FREQ occurrences of the following fields:

{ (NUM_FREQ)

TD_HASH_IND	1
TD_POWER_LEVEL	0 or 2

} (NUM_FREQ)

CDMA_BAND	5
SUBCLASS_INFO_INCL	1
SUBCLASS_REC_LEN	0 or 5

SUBCLASS_REC_LEN + 1 occurrences of the following subrecord:

{ (SUBCLASS_REC_LEN + 1)

CDMA_SUBCLASS	1

} (SUBCLASS_REC_LEN + 1)

CDMA_FREQ_WEIGHT_INCL	1

If CDMA_FREQ_WEIGHT_INCL is equal to '1', include NUM_FREQ occurrences of the following field:

{ (NUM_FREQ)

CDMA_FREQ_WEIGHT	3

} (NUM_FREQ)

NUM_BAND	3

{ (NUM_BAND)

ADD_CDMA_BAND	5
ADD_SUBCLASS_INFO_INCL	1
ADD_SUBCLASS_REC_LEN	0 or 5

ADD_SUBCLASS_REC_LEN + 1 occurrences of the following subrecord:

{ (ADD_SUBCLASS_REC_LEN + 1)

ADD_CDMA_SUBCLASS	1

} (ADD_SUBCLASS_REC_LEN + 1)

ADD_TD_MODE	0 or 2
BYPASS_SYS_DET_IND	1
NUM_ADD_FREQ	4

NUM_ADD_FREQ occurrences of the following field:

{ (NUM_ADD_FREQ)

ADD_CDMA_FREQ	11
ADD_RC_QPCH_HASH_IND	0 or 1
ADD_TD_HASH_IND	0 or 1
ADD_TD_POWER_LEVEL	0 or 2
ADD_CDMA_FREQ_WEIGHT	0 or 3

} (NUM_ADD_FREQ)

} (NUM_BAND)

PILOT_PN - Pilot PN sequence offset index.

The base station shall set this field to the pilot PN sequence offset for this base station, in units of 64 PN chips.

CONFIG_MSG_SEQ - Configuration message sequence number.

The base station shall set this field to CONFIG_SEQ (see 3.6.2.2).

NUM_FREQ - Number of CDMA Frequencies

The base station shall set this field to the number of occurrences of the CDMA_FREQ field included in this message.

The base station shall not set this field to '0000'.

The base station shall include NUM_FREQ occurrences of the following one-field record:

CDMA_FREQ - CDMA Channel frequency assignment.

If this message is sent on the Paging Channel:

The base station shall set this field to the CDMA channel number corresponding to the CDMA frequency assignment for a CDMA Channel containing a Paging Channel (see [2]).

This CDMA channel shall reside in the same band class as the band class where this message is being transmitted. If SUBCLASS_INFO_INCL is equal to '1', this CDMA channel shall also reside in at least one supported CDMA_SUBCLASS included in the message.

If this message is sent on the Primary Broadcast Control Channel:

The base station shall set this field to the CDMA Channel number corresponding to the CDMA frequency assignment for a CDMA Channel containing a Primary Broadcast Control Channel and Forward Common Control Channel (see [2]).

This CDMA channel shall reside in the same band class as the band class where this message is being transmitted. If SUBCLASS_INFO_INCL is equal to '1', this CDMA channel shall also reside in at least one supported CDMA_SUBCLASS included in the message.

If the base station supports a CDMA frequency assignment without transmit diversity, the base station should not set the first occurrence of this field to a CDMA channel number corresponding to a transmit diversity frequency assignment.

RC_QPCH_SEL_INCL - RC and QPCH Selection included indicator

The base station shall set this field to '1', if NUM_FREQ occurrences of RC_QPCH_HASH_IND are included; otherwise, it shall set this field to '0'.

If the base station sets this field to '1', the base station shall set the RC_QPCH_HASH_IND field to '1' in at least one of the following one-field records:

RC_QPCH_HASH_IND - RC_QPCH channel hashing indicator

If RC_QPCH_SEL_INCL is set to '1', the base station shall include NUM_FREQ occurrences of this field and set this field as follow; otherwise, the base station shall omit this field.

The base station shall set this field to ‘1’, if the corresponding CDMA channel is to be selected for channel hashing by mobile stations capable of Radio Configurations greater than two or capable of supporting Quick Paging Channel.

TD_SEL_INCL - Transmit diversity selection indicator included.

The base station shall set this field to ‘1’, if the base station includes transmit diversity selection information in this message; otherwise, the base station shall set this field to ‘0’.

When the *Extended CDMA Channel List Message* is sent on the Paging Channel, the base station shall set this field to ‘0’.

TD_MODE - Transmit diversity mode.

If TD_SEL_INCL is set to ‘0’, the base station shall omit this field; otherwise, the base station shall include this field and set it as follows:

The base station shall set this field to the Transmit Diversity mode used on the band class where this message is being transmitted, as specified in Table 3.7.2.3.2.26-3.

If TD_SEL_INCL is set to ‘1’, the base station shall include NUM_FREQ occurrences of the following two-field record, and shall set the TD_HASH_IND field to ‘1’ in at least one of the records:

TD_HASH_IND - Transmit diversity hash indicator.

If the associated CDMA_FREQ is to be selected for CDMA channel hashing by mobile stations capable of supporting transmit diversity [TD_MODE], the base station shall set the field to ‘1’; otherwise, the base station shall set this field to ‘0’.

TD_POWER_LEVEL - Transmit diversity power level.

If TD_HASH_IND is set to ‘0’, the base station shall omit this field; otherwise, the base station shall include this field and set it to the transmit diversity transmission power level relative to that of the Forward Pilot Channel, as specified in Table 3.7.2.3.2.26-4.

CDMA_BAND – Current band class.

The base station shall set this field to the CDMA band class (see [30]) corresponding to the CDMA frequency assignment for the CDMA Channel where this message is being transmitted.

SUBCLASS_INFO_INCL - Band subclass information included

The base station shall set this field to ‘0’ when no band subclasses are associated with the listed CDMA_FREQ channels or when band subclasses are not to be factored into the mobile station’s hashing algorithm; otherwise, the base station shall set this field to ‘1’.

SUBCLASS_REC_LEN - Band subclass subrecord length

If SUBCLASS_INFO_INCL is set to '0', the base station shall omit this field; otherwise, the base station shall set this field as follows:

The base station shall set this field to the number of band subclass indicator fields included in the subrecord minus one. The number of band subclass indicator fields included is limited to the highest band subclass supported on any of the CDMA_FREQ channels listed above for the current band (i.e. if the highest band subclass is K, then SUBCLASS_REC_LEN = K).

If the SUBCLASS_REC_LEN field is included, the base station shall include SUBCLASS_REC_LEN + 1 occurrences of the following subrecord. The first field included corresponds to band subclass '0' and the Nth field included corresponds to band subclass 'N-1'.

CDMA_SUBCLASS - Band subclass indicator

The base station shall set this field to '1' if the corresponding band subclass is supported on any of the CDMA_FREQ channels listed above; otherwise, the base station shall set this field to '0'.

CDMA_FREQ_WEIGHT_INCL - CDMA frequency weight included indicator

The base station shall set this field to '1' if the CDMA_FREQ_WEIGHT fields are included in this message; otherwise, it shall set this field to '0'.

If CDMA_FREQ_WEIGHT_INCL is included and set to '1', the base station shall include NUM_FREQ occurrences of the following one-field record:

CDMA_FREQ_WEIGHT - CDMA frequency weight

The base station shall set this field to one less than the weight for this CDMA channel to be used in channel hashing by the mobile station.

NUM_BAND - Number of CDMA Bands

The base station shall set this field to the number of additional bands listed in this message.

The base station shall include NUM_BAND occurrences of the following record:

ADD_CDMA_BAND - Band class.

The base station shall set this field to the CDMA band class, as specified in [30], corresponding to the additional CDMA frequencies (ADD_CDMA_FREQ) included in this record.

ADD_SUBCLASS_INFO_INCL - Band subclass information included

The base station shall set this field to '0' when no band subclasses are associated with the listed band or when band subclasses are not to be factored into the mobile station's hashing algorithm; otherwise, the base station shall set this field to '1'.

ADD_SUBCLASS_REC_LEN - Band subclass subrecord length

If ADD_SUBCLASS_INFO_INCL is set to '0', the base station shall omit this field; otherwise, the base station shall set this field as follows:

The base station shall set this field to the number of band subclass indicator fields included in the subrecord minus one. The number of band subclass indicator fields included is limited to the highest band subclass supported on the band listed above (i.e. if the highest band subclass is K, then ADD_SUBCLASS_REC_LEN = K).

If the ADD_SUBCLASS_REC_LEN field is included, the base station shall include ADD_SUBCLASS_REC_LEN + 1 occurrences of the following subrecord. The first field included corresponds to band subclass '0' and the Nth field included corresponds to band subclass 'N-1'.

ADD_CDMA_SUBCLASS - Band subclass indicator

The base station shall set this field to '1' if the corresponding band subclass is supported on the band listed above; otherwise, the base station shall set this field to '0'.

ADD_TD_MODE - Transmit diversity mode.

If TD_SEL_INCL is set to '0', the base station shall omit this field; otherwise, the base station shall include this field and set it as follows:

The base station shall set this field to the Transmit Diversity mode on the ADD_CDMA_BAND listed above, as specified in Table 3.7.2.3.2.26-3.

BYPASS_SYS_DET_IND - Direct to idle allowed indicator.

The base station shall set this field to '1' if the mobile station is allowed to go directly to idle state on any CDMA channel belonging to the ADD_CDMA_BAND listed above.

NUM_ADD_FREQ - Number of additional CDMA Frequencies

The base station shall set this field to the number of occurrences of the ADD_CDMA_FREQ field included herafter.

The mobile station shall include NUM_ADD_FREQ occurrences of the following record:

ADD_CDMA_FREQ - CDMA Channel frequency assignment.

If this message is sent on the Paging Channel:

The base station shall set this field to the CDMA channel number corresponding to the CDMA frequency assignment for a CDMA Channel containing a Paging Channel (see [2]).

This CDMA channel resides in the band class listed in this ADD_CDMA_BAND record. If ADD_SUBCLASS_INFO_INCL is equal to '1', this CDMA channel shall also reside in at least one supported ADD_CDMA_SUBCLASS included in this ADD_CDMA_BAND record.

If this message is sent on the Primary Broadcast Control Channel:

The base station shall set this field to the CDMA Channel number corresponding to the CDMA frequency assignment for a CDMA Channel containing a Primary Broadcast Control Channel and Forward Common Control Channel (see [2]).

This CDMA channel resides in the band class listed in this ADD_CDMA_BAND record. If ADD_SUBCLASS_INFO_INCL is equal to '1', this CDMA channel shall also reside in at least one supported ADD_CDMA_SUBCLASS included in this ADD_CDMA_BAND record.

If the base station supports a CDMA frequency assignment without transmit diversity, the base station should not set the first occurrence of this field to a CDMA channel number corresponding to a transmit diversity frequency assignment.

ADD_RC_QPCH_HASH_IND - RC QPCH channel hashing indicator

If RC_QPCH_SEL_INCL is set to '0', the base station shall omit this field; otherwise, the base station shall include this field and set it as follows:

The base station shall set this field to '1', if the corresponding CDMA channel is to be selected for channel hashing by mobile stations capable of Radio Configurations greater than two or capable of supporting Quick Paging Channel.

ADD_TD_HASH_IND - Transmit diversity hash indicator.

If TD_SEL_INCL is set to '0', the base station shall omit this field; otherwise, the base station shall include this field and set it as follows:

If the associated ADD_CDMA_FREQ is to be selected for CDMA channel hashing by mobile stations capable of supporting transmit diversity [TD_MODE], the base station shall set the field to '1'; otherwise, the base station shall set this field to '0'.

ADD_TD_POWER_LEVEL - Transmit diversity power level.

If ADD_TD_HASH_IND is not included or is included and set to '0', the base station shall omit this field; otherwise, the base station shall include this field and set it to the transmit diversity transmission power level relative to that of the Forward Pilot Channel, as specified in Table 3.7.2.3.2.26-4.

ADD_CDMA_FREQ_WEIGHT - CDMA frequency weight

If CDMA_FREQ_WEIGHT_INCL is set to '0', the base station shall omit this field; otherwise, the base station shall include this field and set it as follows:

The base station shall set this field to one less than the weight for this CDMA channel to be used in channel hashing by the mobile station.

3.7.2.3.2.29 User Zone Reject Message

MSG_TAG: UZRM

Field	Length (bits)
REJECT_UZID	16
REJECT_ACTION_INDI	3
UZID_ASSIGN_INCL	1
ASSIGN_UZID	0 or 16

REJECT_UZID - Rejected User Zone identifier.

The base station shall set this field to the User Zone identifier of the User Zone rejected by the base station.

REJECT_ACTION_INDI - Rejection action indicator.

The base station shall set this field to the value shown in Table 3.7.2.3.2.29-1 corresponding to the User Zone rejection action field to identify the mobile station action.

Table 3.7.2.3.2.29-1. Rejection Action Indicators

Description	REJECT_ACTION_INDI (binary)
Disable UZID until Next Update	000
Disable UZID until next power cycle	001
Disable UZID until new SID	010
Disable UZID until new SID/NID	011
Disable UZID until next BASE_ID	100
All other REJECT_ACTION_INDI values are reserved	

UZID_ASSIGN_INCL - User Zone identifier assignment included indicator.

If assigned UZID information is included, the base station shall set this field to ‘1’; otherwise, the base station shall set this field to ‘0’.

ASSIGN_UZID - Assigned User Zone identifiers.

The base station shall set this field to the User Zone identifier of the User Zone assigned to the mobile station.

3.7.2.3.2.30 ANSI-41 System Parameters Message

MSG_TAG: A41SPM

Field	Length (bits)
PILOT_PN	9
CONFIG_MSG_SEQ	6
SID	15
NID	16
PACKET_ZONE_ID	8
REG_ZONE	12
TOTAL_ZONES	3
ZONE_TIMER	3
MULT_SIDS	1
MULT_NIDS	1
HOME_REG	1
FOR_SID_REG	1
FOR_NID_REG	1
POWER_UP_REG	1
POWER_DOWN_REG	1
PARAMETER_REG	1
REG_PRD	7
DIST_REG_INCL	1
REG_DIST	0 or 11
DELETE_FOR_TMSI	1
USE_TMSI	1
PREF_MSID_TYPE	2

(continues on next page)

Field	Length (bits)
TMSI_ZONE_LEN	4
TMSI_ZONE	8 × TMSI_ZONE_LEN
IMSI_T_SUPPORTED	1
MAX_NUM_ALT_SO	3
AUTO_MSG_SUPPORTED	1
AUTO_MSG_INTERVAL	0 or 3
OTHER_INFO_INCL	1
BASE_ID	0 or 16
MCC	0 or 10
IMSI_11_12	0 or 7
BROADCAST_GPS_ASST	0 or 1
SIG_ENCRYPT_SUP	0 or 8
CS_SUPPORTED	1
MS_INIT_POS_LOC_SUP_IND	1
MSG_INTEGRITY_SUP	1
SIG_INTEGRITY_SUP_INCL	0 or 1
SIG_INTEGRITY_SUP	0 or 8
IMSI_10_INCL	1
IMSI_10	0 or 4
MAX_ADD_SERV_INSTANCE	0 or 3
TKZ_MODE_SUPPORTED	1
TKZ_ID	0 or 8
PZ_HYST_ENABLED	0 or 1
PZ_HYST_INFO_INCL	0 or 1
PZ_HYST_LIST_LEN	0 or 4
PZ_HYST_ACT_TIMER	0 or 8
PZ_HYST_TIMER_MUL	0 or 3
PZ_HYST_TIMER_EXP	0 or 5
EXT_PREF_MSID_TYPE	2
MEID_REQD	0 or 1

PILOT_PN - Pilot PN sequence offset index.

The base station shall set this field to the pilot PN sequence offset for this base station, in units of 64 PN chips.

CONFIG_MSG_SEQ - Configuration message sequence number.

The base station shall set this field to CONFIG_SEQ (see 3.6.2.2).

SID - System identification.

The base station shall set this field to the system identification number for this system (see 2.6.5.2).

NID - Network identification.

This field serves as a sub-identifier of a system as defined by the owner of the SID.

The base station shall set this field to the network identification number for this network (see 2.6.5.2).

PACKET_ZONE_ID - Packet data services zone identifier.

If the base station supports a packet data service zone, the base station shall set this field to its non-zero packet data services zone identifier.

If the base station does not support a packet data service zone, the base station shall set this field to '00000000'.

REG_ZONE - Registration zone.

The base station shall set this field to its registration zone number (see 2.6.5.1.5).

TOTAL_ZONES - Number of registration zones to be retained.

The base station shall set this field to the number of registration zones the mobile station is to retain for purposes of zone-based registration (see 2.6.5.1.5).

If zone-based registration is to be disabled, the base station shall set this field to '000'.

ZONE_TIMER - Zone timer length.

The base station shall set this field to the ZONE_TIMER value shown in Table 3.7.2.3.2.30-1 corresponding to the length of the zone registration timer to be used by mobile stations.

Table 3.7.2.3.2.30-1. Value of Zone Timer

ZONE_TIMER Value (binary)	Timer Length (Minutes)
000	1
001	2
010	5
011	10
100	20
101	30
110	45
111	60

MULT_SIDS - Multiple SID storage indicator.

If mobile stations may store entries of SID_NID_LIST containing different SIDs, the base station shall set this field to ‘1’; otherwise the base station shall set this field to ‘0’.

MULT_NIDS - Multiple NID storage indicator.

If mobile stations may store multiple entries of SID_NID_LIST having the same SID (with different NIDs), the base station shall set this field to ‘1’; otherwise the base station shall set this field to ‘0’.

HOME_REG - Home registration indicator.

If mobile stations that are not roaming (see 2.6.5.3) and have MOB_TERM_HOME equal to ‘1’ are to be enabled for autonomous registrations, the base station shall set this field to ‘1’. If such mobile stations are not to be enabled for autonomous registration, the base station shall set this field to ’0’.

FOR_SID_REG - SID roamer registration indicator.

If mobile stations that are foreign SID roamers (see 2.6.5.3) and have MOB_TERM_FOR_SID equal to ‘1’ are to be enabled for autonomous registration, the base station shall set this field to ‘1’. If such mobile stations are not to be enabled for autonomous registration, the base station shall set this field to ’0’.

FOR_NID_REG - NID roamer registration indicator.

If mobile stations that are foreign NID roamers (see 2.6.5.3) and have MOB_TERM_FOR_NID equal to ‘1’ are to be enabled for autonomous registration, the base station shall set this field to ‘1’. If such mobile stations are not to be enabled for autonomous registration, the base station shall set this field to ‘0’.

POWER_UP_REG - Power-up registration indicator.

If mobile stations enabled for autonomous registration are to register immediately after powering on and receiving the system overhead messages, the base station shall set this field to '1'; otherwise, the base station shall set this field to '0'.

POWER_DOWN_REG - Power-down registration indicator.

If mobile stations enabled for autonomous registration are to register immediately before powering down, the base station shall set this field to '1'; otherwise, the base station shall set this field to '0'.

PARAMETER_REG - Parameter-change registration indicator.

If mobile stations are to register on parameter change events as specified in 2.6.5.1.6, the base station shall set this field to '1'. If not, the base station shall set this field to '0'.

REG_PRD - Registration period.

If mobile stations are not to perform timer-based registration, the base station shall set this field to '0000000'. If mobile stations are to perform timer-based registration, the base station shall set this field to the value in the range 29 to 85 inclusive, such that the desired timer value is

$$\lfloor 2^{\mathrm{REG\_PRD}/4} \rfloor \times 0.08 \text{ seconds.}$$

DIST_REG_INCL - Distance-Based Registration Information Included.

The base station shall set this field to '1' if it includes distance-based registration information in the message and mobile stations are to perform distance-based registration; otherwise the base station shall set this field to '0'.

REG_DIST - Registration distance.

If DIST_REG_INCL is set to '1', the base station shall include the field REG_DIST and shall set this field as shown below; otherwise, the base station shall omit this field.

The base station shall set this field to the non-zero "distance" beyond which the mobile station is to re-register (see 2.6.5.1.4).

DELETE_FOR_TMSI - Delete foreign TMSI.

The base station shall set this field to '1' to cause the mobile station to delete its TMSI if the TMSI was assigned in a different TMSI zone from that specified by the TMSI_ZONE field of this message; otherwise, the base station shall set this field to '0'.

USE_TMSI - Use TMSI indicator.

The base station shall set this field to the value shown in Table 3.7.2.3.2.13-1 corresponding to the type of MSID that the mobile station is to use on the Enhanced Access Channel.

PREF_MSID_TYPE - Preferred Enhanced Access Channel Mobile Station Identifier Type.

The base station shall set this field to the value shown in Table 3.7.2.3.2.13-1 and Table 3.7.2.3.2.13-1a corresponding to the type of MSID that the mobile station is to use on the Enhanced Access Channel.

TMSI_ZONE_LEN - TMSI zone length.

The base station shall set this field to the number of octets included in the TMSI_ZONE. The base station shall set this field to a value in the range 1 to 8 inclusive.

TMSI_ZONE - TMSI zone.

The base station shall set this field to the TMSI zone number as specified in [27].

IMSI_T_SUPPORTED - IMSI_T support indicator.

The base station shall set this field to '1' to indicate support for a 15-digit IMSI_T addressing according to [18].

MAX_NUM_ALT_SO - Maximum number of alternative service options.

The base station shall set this field to the maximum number of service option numbers defined in [30], corresponding to alternative service options with no service option group number assigned, that the mobile station is allowed to include in the *Origination Message*, and the *Page Response*.

If the base station sets this field to a value greater than zero, in addition, the base station shall allow the mobile station to include

- a 4-bit or 8-bit service option bitmap in the *Origination Message* and the *Page Response Message*;
- alternate service option numbers, not limited to MAX_ALT_SO_NUM, in the *Enhanced Origination Message*.

AUTO_MSG_SUPPORTED - Autonomous message supported indicator.

If the base station allows the autonomous delivery of the *Device Information Message* on the r-csch, the base station shall set this field to '1'; otherwise, the base station shall set this field to '0'.

AUTO_MSG_INTERVAL - Autonomous message interval.

If AUTO_MSG_SUPPORTED is set to '0', the base station shall omit this field; otherwise, the base station shall include this field and shall set this field to the AUTO_MSG_INTERVAL value shown in Table 3.7.2.3.2.13-4 to indicate the minimum time interval between autonomous messages sent by a mobile station to the infrastructure. This parameter is intended to allow the infrastructure to limit the frequency of autonomous messages sent by a mobile station on the r-csch.

OTHER_INFO_INCL - Other information included indicator.

The base station shall set this field to ‘1’ if the MC-RR Parameters Message is not sent (see [32]); otherwise, the base station shall set this field to ‘0’.

BASE_ID - Base station identification.

If OTHER_INFO_INCL is set to ‘1’, the base station shall include this field and set it as follows; otherwise, the base station shall omit this field.

The base station shall set this field to its identification number.

MCC - Mobile Country Code.

If OTHER_INFO_INCL is set to ‘1’, the base station shall include this field and set it as follows; otherwise, the base station shall omit this field.

The base station shall set this field to the MCC (see 2.3.1)

IMSI_11_12 - 11th and 12th digits of the IMSI.

If OTHER_INFO_INCL is set to ‘1’, the base station shall include this field and set it as follows; otherwise, the base station shall omit this field.

The base station shall set this field to the IMSI_11_12 (see 2.3.1).

BROADCAST_GPS_ASST - Broadcast GPS Assist Indicator.

If OTHER_INFO_INCL is set to ‘1’, the base station shall include this field and set it as follows; otherwise, the base station shall omit this field.

The base station shall set this field to ‘1’ if it supports Broadcast GPS Assist capability; otherwise, the base station shall set this field to ‘0’.

SIG_ENCRYPT_SUP – Signaling encryption supported indicator.

If OTHER_INFO_INCL is set to ‘1’, the base station shall include this field and set it as follows; otherwise, the base station shall omit this field.

This field consists of the subfields shown in Table 2.7.1.3.2.1-5.

If this field is included, the base station shall set the subfields as follows:

The base station shall set the CMEA subfield to ‘1’.

The base station shall set each other subfield to ‘1’ if the corresponding signaling encryption algorithm is supported by the base station; otherwise, the base station shall set the subfield to ‘0’.

The base station shall set the RESERVED subfield to ‘00000’.

CS_SUPPORTED – Concurrent Services supported indicator.

If the base station supports concurrent services, the base station shall set this field to '1'; otherwise, the base station shall set this field to '0'.

MS_INIT_POS_LOC_SUP_IND - Mobile station initiated position location determination supported indicator.

If the base station supports mobile station initiated position determination, the base station shall set this field to '1'; otherwise, the base station shall set this field to '0'.

MSG_INTEGRITY_SUP - Message integrity supported indicator.

If the base station supports message integrity the base station shall set this field to '1'; otherwise, the base station shall set this field to '0'.

SIG_INTEGRITY_SUP_INCL - Signaling message integrity information included indicator.

If MSG_INTEGRITY_SUP is set to '1', the base station shall include this field and set it as follows; otherwise, the base station shall omit this field.

If the base station supports other integrity algorithm(s) in addition to the default integrity algorithm, the base station shall set this field to '1'; otherwise, the base station shall set this field to '0'.

SIG_INTEGRITY_SUP - Signaling integrity algorithm supported by the base station.

If SIG_INTEGRITY_SUP_INCL is included and is set to '1', the base station shall set this field as follows; otherwise, the base station shall omit this field.

The base station shall set this field to indicate the supported message integrity algorithms in addition to the default integrity algorithm.

This field consists of the subfields shown in Table 2.7.1.3.2.1-6.

The base station shall set each subfield to '1' if the corresponding message integrity algorithm is supported by the base station; otherwise, the base station shall set the subfield to '0'.

The base station shall set the RESERVED subfield to '00000000'.

IMSI_10_INCL - IMSI_10 included.

If the MNC is a 3-digit number and the base station wants to convey the third digit of the MNC to the mobile station, the base station shall set this field to '1'; otherwise, the base station shall set this field to '0'.

IMSI_10 - The least significant digit of MNC when the MNC is a 3-digit number.

If IMSI_10_INCL is set to ‘0’, the base station shall omit this field; otherwise, the base station shall set this field to the least significant digit of MNC converted to binary by the standard decimal-to-binary conversion as shown in Table 2.3.1.1-1.

MAX_ADD_SERV_INSTANCE - Maximum number of additional service reference identifiers allowed in origination

If the CS_SUPPORTED field is set to ‘0’, the base station shall omit this field; otherwise, the base station shall include this field and set it as follows:

The base station shall set this field to the maximum number of additional service reference identifiers that can be included in the *Origination Message* or *Enhanced Origination Message*.

TKZ_MODE_SUPPORTED - Tracking zone mode supported indicator.

The base station shall set this field to ‘1’ if tracking zone mode is supported; otherwise, the base station shall set this field to ‘0’.

TKZ_ID - Tracking zone identifier.

If TKZ_MODE_SUPPORTED is set to ‘1’, the base station shall set this field to its tracking zone identifier; otherwise, the base station shall omit this field.

PZ_HYST_ENABLED - Packet zone hysteresis enabled.

If the PACKET_ZONE_ID field is set to ‘00000000’, the base station shall omit this field; otherwise, the base station shall include this field and set it as follows:

If the packet zone hysteresis feature is to be enabled at the mobile station, the base station shall set this field to ‘1’; otherwise, the base station shall set this field to ‘0’.

PZ_HYST_INFO_INCL - Packet zone hysteresis information included indicator.

If the PZ_HYST_ENABLED field is included and is set to ‘1’, the base station shall include this field and set it as follows; otherwise, the base station shall omit this field.

If the base includes the PZ_HYST_LIST_LEN, PZ_HYST_ACT_TIMER and packet zone hysteresis timer related fields, the base station shall set this field to ‘1’; otherwise, the base station shall set this field to ‘0’.

PZ_HYST_LIST_LEN - Packet zone hysteresis list length.

If the PZ_HYST_INFO_INCL field is included and is set to ‘1’, the base station shall include this field and set it as follows; otherwise, the base station shall omit this field.

The base station shall set this field to the length of the packet zone hysteresis list. This field shall be within the range ‘0001’ through ‘1111’, inclusive.

PZ_HYST_ACT_TIMER - Packet zone hysteresis activation timer.

If the PZ_HYST_INFO_INCL field is included and is set to ‘1’, the base station shall include this field and set it as follows; otherwise, the base station shall omit this field.

The base station shall set to the value of the packet zone hysteresis activation timer (in units of seconds). This field shall be within the range ‘00000001’ through ‘11111111’, inclusive.

PZ_HYST_TIMER_MUL - Packet zone hysteresis timer multiplier.

If the PZ_HYST_INFO_INCL field is included and is set to ‘1’, the base station shall include this field and set it as follows; otherwise, the base station shall omit this field.

The base station shall set the field to x, where x × 8^y seconds is the value of the hysteresis timer and y is the value indicated in the PZ_HYST_TIMER_EXP field. The base station shall set this field to a value that is between 1 and 7 inclusive. The value 0 is reserved.

PZ_HYST_TIMER_EXP - Packet zone hysteresis timer exponent.

If the PZ_HYST_INFO_INCL field is included and is set to ‘1’, the base station shall include this field and set it as follows; otherwise, the base station shall omit this field.

The base station shall set the field to y, where x × 8^y seconds is the value of the hysteresis timer and x is the value indicated in the PZ_HYST_TIMER_MUL field. The base station shall set this field to a value that is between 0 and 4 inclusive. All the other values are reserved.

EXT_PREF_MSID_TYPE - Extended Preferred Enhanced Access Channel Mobile Station Identifier Type.

The base station shall set this field to the value shown in Table 3.7.2.3.2.13-1 and Table 3.7.2.3.2.13-1a corresponding to the type of MSID that the mobile station is to use on the Enhanced Access Channel.

MEID_REQD - MEID Required Indicator.

If EXT_PREF_MSID_TYPE is set to ‘11’ and PREF_MSID_TYPE is set to either ‘00’ or ‘11’, the base station shall omit this field; otherwise, the base station shall include this field and set it as follows:

The base station shall set this field to ‘1’ to indicate that network requires MEID (of mobile stations having R-UIM) in registrations; otherwise the base station shall set this field to ‘0’.

3.7.2.3.2.31 MC-RR Parameters Message

MSG_TAG: MCRRPM

Field	Length (bits)
PILOT_PN	9
CONFIG_MSG_SEQ	6
BASE_ID	16
P_REV	8
MIN_P_REV	8
SR3_INCL	1
SR3_CENTER_FREQ_INCL	0 or 1
SR3_CENTER_FREQ	0 or 11
SR3_BRAT	0 or 2
SR3_BCCH_CODE_CHAN	0 or 7
SR3_PRIMARY_PILOT	0 or 2
SR3_PILOT_POWER1	0 or 3
SR3_PILOT_POWER2	0 or 3
SRCH_WIN_A	4
SRCH_WIN_R	4
T_ADD	6
T_DROP	6
T_COMP	4
T_TDROP	4
NGHBR_MAX_AGE	4
SOFT_SLOPE	6
ADD_INTERCEPT	6
DROP_INTERCEPT	6
ENC_SUPPORTED	1
SIG_ENCRYPT_SUP	0 or 8
UI_ENCRYPT_SUP	0 or 8

(continues on next page)

Field	Length (bits)
ADD_FIELDS_LEN	8
ADD_FIELDS	8 × ADD_FIELDS_LEN
CCH_INFO_INCL	1
MCC	0 or 10
IMSI_11_12	0 or 7
MAX_SLOT_CYCLE_INDEX	0 or 3
PWR_REP_THRESH	0 or 5
PWR_REP_FRAMES	0 or 4
PWR_THRESH_ENABLE	0 or 1
PWR_PERIOD_ENABLE	0 or 1
PWR_REP_DELAY	0 or 5
RESELECT_INCLUDED	0 or 1
EC_THRESH	0 or 5
EC_I0_THRESH	0 or 5
BASE_LAT	0 or 22
BASE_LONG	0 or 23
PILOT_REPORT	0 or 1
ACC_ENT_HO_ORDER	0 or 1
ACCESS_HO	0 or 1
ACCESS_HO_MSG_RSP	0 or 1
ACCESS_PROBE_HO	0 or 1
ACC_HO_LIST_UPD	0 or 1
ACC_PROBE_HO_OTHER_MSG	0 or 1
MAX_NUM_PROBE_HO	0 or 3
NUM_FCCCH	0 or 3
FCCCH_RATE	0 or 3
FCCCH_CODE_RATE	0 or 1

NUM_FCCCH occurrences of the following one field record:

{ (NUM_FCCCH)

FCCCH_CODE_CHAN	8
} (NUM_FCCCH)	

(continues on next page)

1

Field	Length (bits)
BCAST_INDEX	0 or 3
NUM_BCCH_BCAST	0 or 3
NUM_BCCH_BCAST occurrences of the following three-field record: *{ (NUM_BCCH_BCAST)*	
BCCH_CODE_CHAN	7
BRAT	2
BCCH_CODE_RATE	1
} (NUM_BCCH_BCAST)	
QPCH_SUPPORTED	0 or 1
NUM_QPCH	0 or 2
QPCH_RATE	0 or 1
QPCH_POWER_LEVEL_PAGE	0 or 3
QPCH_CCI_SUPPORTED	0 or 1
QPCH_POWER_LEVEL_CONFIG	0 or 3
NUM_QPCH occurrences of the following one field record if SR3_INCL is set to ‘1’ : *{ (NUM_QPCH)*	
QPCH_CODE_CHAN	0 or 8
} (NUM_QPCH)	
QPCH_BI_SUPPORTED	0 or 1
QPCH_POWER_LEVEL_BCAST	0 or 3
SDB_SUPPORTED	0 or 1
BROADCAST_GPS_ASST	0 or 1
RLGAIN_TRAFFIC_PILOT	0 or 6
REV_PWR_CNTL_DELAY_INCL	0 or 1
REV_PWR_CNTL_DELAY	0 or 2
MOB_QOS	0 or 1
USE_SYNC_ID	0 or 1
NUM_OPT_MSG_BITS	0 or 4

(continues on next page)

Field	Length (bits)
SENDING_RAND	0 or 1
PRI_NGHBR_LST	0 or 1
USER_ZONE_ID	0 or 1
EXT_GLOBAL_REDIRECT	0 or 1
AP_PILOT_INFO	0 or 1
AP_IDT	0 or 1
AP_ID_TEXT	0 or 1
GEN_OVHD_INF_IND	0 or 1
FD_CHAN_LST_IND	0 or 1
ATIM_IND	0 or 1
RESERVED	0 or (NUM_OPT_MSG_ BITS – 10)
PILOT_INFO_REQ_SUPPORTED	0 or 1
BAND_CLASS_INFO_REQ	0 or 1
ALT_BAND_CLASS	0 or 5
CDMA_OFF_TIME_REP_SUP_IND	1
CDMA_OFF_TIME_REP_THRESHOLD _UNIT	0 or 1
CDMA_OFF_TIME_REP_THRESHOLD	0 or 3
CHM_SUPPORTED	1
RELEASE_TO_IDLE_IND	1
RECONNECT_MSG_IND	1
T_TDROP_RANGE_INCL	1
T_TDROP_RANGE	0 or 4
FOR_PDCH_SUPPORTED	1
PDCH_CHM_SUPPORTED	0 or 1
PDCH_PARMS_INCL	0 or 1
FOR_PDCH_RLGAIN_INCL	0 or 1
RLGAIN_ACKCH_PILOT	0 or 6
RLGAIN_CQICH_PILOT	0 or 6
NUM_SOFT_SWITCHING_FRAMES	0 or 4
NUM_SOFTER_SWITCHING_FRAMES	0 or 4

NUM_SOFT_SWITCHING_SLOTS	0 or 2
NUM_SOFTER_SWITCHING_SLOTS	0 or 2
PDCH_SOFT_SWITCHING_DELAY	0 or 8
PDCH_SOFTER_SWITCHING_DELAY	0 or 8

Field	Length (bits)
WALSH_TABLE_ID	0 or 3
NUM_PDCCH	0 or 3

NUM_PDCCH+1 occurrences of the following record:

{ (NUM_PDCCH+1)

FOR_PDCCH_WALSH	0 or 6

} (NUM_PDCCH+1)

IMSI_10_INCL	0 or 1
IMSI_10	0 or 4
NEG_SLOT_CYCLE_INDEX_SUP	1
RER_MODE_SUPPORTED	1
AUTO_FCSO_ALLOWED	1
SENDING_BSPM	1
BSPM_PERIOD_INDEX	0 or 4
REV_PDCH_SUPPORTED	0 or 1
REV_PDCH_PARMS_INCL	0 or 1
REV_PDCH_RLGAIN_INCL	0 or 1
RLGAIN_SPICH_PILOT	0 or 6
RLGAIN_REQCH_PILOT	0 or 6
RLGAIN_PDCCH_PILOT	0 or 6
REV_PDCH_PARMS_1_INCL	0 or 1
REV_PDCH_TABLE_SEL	0 or 1
REV_PDCH_MAX_AUTO_TPR	0 or 8
REV_PDCH_NUM_ARQ_ROUNDS_NORMAL	0 or 2
REV_PDCH_OPER_PARMS_INCL	0 or 1
REV_PDCH_MAX_SIZE_ALLOWED_ENCODER_PACKET	0 or 4
REV_PDCH_DEFAULT_PERSISTENCE	0 or 1
REV_PDCH_RESET_PERSISTENCE	0 or 1
REV_PDCH_GRANT_PRECEDENCE	0 or 1
REV_PDCH_MSIB_SUPPORTED	0 or 1
REV_PDCH_SOFT_SWITCHING_RESET_IND	0 or 1

SDB_IN_RCNM_IND	0 or 1
CAND_BAND_INFO_REQ	0 or 1
NUM_CAND_BAND_CLASS	0 or 3

NUM_CAND_BAND_CLASS +1 occurrences of the following record:

{(NUM_CAND_BAND_CLASS + 1)

CAND_BAND_CLASS	5
SUBCLASS_INFO_INCL	1
SUBCLASS_REC_LEN	0 or 5

SUBCLASS_REC_LEN +1 occurrences of the following subrecord:

{(SUBCLASS_REC_LEN + 1)

BAND_SUBCLASS_IND	0 or 1

}(SUBCLASS_REC_LEN + 1)

}(NUM_CAND_BAND_CLASS + 1)

RESCAN	1
TX_PWR_LIMIT_INCL	1
TX_PWR_LIMIT	0 or 6
BYPASS_REG_IND	2
CRRM_MSG_IND	1
APPIM_PERIOD_INDEX	0 or 3
GEN_OVHD_CYCLE_INDEX	0 or 3
ATIM_CYCLE_INDEX	0 or 3
ADD_LOC_INFO_INCL	0 or 1
LOC_UNC_H	0 or 4
HEIGHT	0 or 14
LOC_UNC_V	0 or 4

PILOT_PN - Pilot PN sequence offset index.

The base station shall set this field to the pilot PN sequence offset for this base station, in units of 64 PN chips.

CONFIG_MSG_SEQ - Configuration message sequence number.

The base station shall set this field to CONFIG_SEQ (see 3.6.2.2).

BASE_ID - Base station identification.

The base station shall set this field to its identification number.

P_REV - Protocol revision level.

The base station shall set this field to '00001100'.

MIN_P_REV - Minimum protocol revision level.

The base station sets this field to prevent mobile stations, which cannot be supported by the base station from accessing the system.

The base station shall set this field to the minimum protocol revision level that it supports.

SR3_INCL - Spreading Rate 3 common channel parameters included indicator.

The base station shall set this field to '1' if the base station includes SR3 related parameters in this message; otherwise, the base station shall set this field to '0'.

SR3_CENTER_FREQ_INCL - Center SR3 frequency assignment included.

If SR3_INCL is set to '0', the base station shall omit this field; otherwise, the base station shall set this field as follows:

The base station shall set this field to '1', if the CDMA Channel number corresponding to the SR3 center frequency assignment for the CDMA Channel containing a Broadcast Control Channel is different from the current SR1 frequency assignment. Otherwise, the base station shall set this field to '0'.

SR3_CENTER_FREQ - Center SR3 frequency assignment.

If SR3_CENTER_FREQ_INCL is not included or is included but is set to '0', the base station shall omit this field; otherwise, the base station shall set this field as follows:

The base station shall set this field to the CDMA Channel number corresponding to the SR3 center frequency assignment for the CDMA Channel containing a Broadcast Control Channel.

SR3_BRAT - Spreading Rate 3 BCCH data rate.

If SR3_INCL is set to '0', the base station shall omit this field; otherwise, the base station shall set this field as follows:

The base station shall set this field to the BCCH rate field value shown in Table 3.7.2.3.2.26-2 corresponding to the data rate used by the Primary Broadcast Control Channel in the system.

SR3_BCCH_CODE_CHAN - Spreading Rate 3 BCCH Walsh code index.

If SR3_INCL is set to '0', the base station shall omit this field; otherwise, the base station shall set this field as follows:

The base station shall set this field to the Walsh code index corresponding to the Spreading Rate 3 BCCH.

SR3_PRIMARY_PILOT - Primary SR3 pilot.

If SR3_INCL is set to '0', the base station shall omit this field; otherwise, the base station shall set this field as follows:

The base station shall set this field to the value shown in Table 3.7.2.3.2.26-5 corresponding to the position of the primary SR3 pilot.

SR3_PILOT_POWER1 - The primary SR3 pilot power level relative to that of the pilot on the lower frequency of the two remaining SR3 frequencies.

If SR3_INCL is set to '0', the base station shall omit this field; otherwise, the base station shall set this field to the value shown in Table 3.7.2.3.2.26-6 corresponding to the power level of the primary pilot with respect to the pilot on the lower frequency of the two remaining SR3 frequencies.

SR3_PILOT_POWER2 - The primary SR3 pilot power level relative to that of the pilot on the higher frequency of the two remaining SR3 frequencies.

If SR3_INCL is set to '0', the base station shall omit this field; otherwise, the base station shall set this field to the value shown in Table 3.7.2.3.2.26-6 corresponding to the power level of the primary pilot with respect to the pilot on the higher frequency of the two remaining SR3 frequencies.

SRCH_WIN_A - Search window size for the Active Set and Candidate Set.

The base station shall set this field to the value shown in Table 2.6.6.2.1-1 corresponding to the search window size to be used by mobile stations for the Active Set and Candidate Set.

SRCH_WIN_R - Search window size for the Remaining Set.

The base station shall set this field to the value shown in Table 2.6.6.2.1-1 corresponding to the search window size to be used by mobile stations for the Remaining Set.

T_ADD - Pilot detection threshold.

This value is used by the mobile station to trigger the transfer of a pilot from the Neighbor Set or Remaining Set to the Candidate Set (see 2.6.6.2.6) and to trigger the sending of the *Pilot Strength Measurement Message* or *Extended Pilot Strength Measurement Message* initiating the handoff process (see 2.6.6.2.5.2).

The base station shall set this field to the pilot detection threshold, expressed as an unsigned binary number equal to $\lfloor - 2 \times 10 \times \log_{10} E_c/I_0 \rfloor$.

T_DROP - Pilot drop threshold.

This value is used by mobile stations to start a handoff drop timer for pilots in the Active Set and the Candidate Set (see 2.6.6.2.3).

The base station shall set this field to the pilot drop threshold, expressed as an unsigned binary number equal to $\lfloor - 2 \times 10 \times \log_{10} E_c/I_0 \rfloor$.

T_COMP - Active Set versus Candidate Set comparison threshold.

Mobile stations transmit a *Pilot Strength Measurement Message* or *Extended Pilot Strength Measurement Message* when the strength of a pilot in the Candidate Set exceeds that of a pilot in the Active Set by this margin (see 2.6.6.2.5.2).

The base station shall set this field to the threshold Candidate Set pilot to Active Set pilot ratio, in units of 0.5 dB.

T_TDROP - Drop timer value.

Timer value after which an action is taken by mobile stations for a pilot that is a member of the Active Set or Candidate Set, and whose strength has not become greater than T_DROP. If the pilot is a member of the Active Set, a *Pilot Strength Measurement Message* or *Extended Pilot Strength Measurement Message* is issued. If the pilot is a member of the Candidate Set, it will be moved to the Neighbor Set.

The base station shall set this field to the T_TDROP value shown in Table 2.6.6.2.3-1 corresponding to the drop timer value to be used by mobile stations.

NGHBR_MAX_AGE - Neighbor Set maximum AGE.

The base station shall set this field to the maximum AGE value beyond which mobile stations are to drop members from the Neighbor Set (see 2.6.6.2.6.3).

SOFT_SLOPE - The slope in the inequality criterion for adding a pilot to the Active Set, or dropping a pilot from the Active Set (see 2.6.6.2.3 and 2.6.6.2.5.2).

The base station shall set this field as an unsigned binary number.

ADD_INTERCEPT - The intercept in the inequality criterion for adding a pilot to the Active Set (see 2.6.6.2.5.2).

The base station shall set this field as a two's complement signed binary number, in units of 0.5 dB.

DROP_INTERCEPT - The intercept in the inequality criterion for dropping a pilot from the Active Set (see 2.6.6.2.3).

The base station shall set this field as a two's complement signed binary number, in units of 0.5 dB.

ENC_SUPPORTED – Encryption fields included.

The base station shall set this field to ‘1’ if the encryption related fields are included; otherwise the base station shall set this field to ‘0’.

SIG_ENCRYPT_SUP – Signaling encryption supported indicator.

If ENC_SUPPORTED is equal to ‘1’, the base station shall include this field; otherwise, the base station shall omit this field. If this field is included, this field indicates which signaling encryption algorithms are supported by the base station.

This field consists of the subfields shown in Table 2.7.1.3.2.1-5.

If this field is included, the base station shall set the subfields as follows:

The base station shall set the CMEA subfield to ‘1’.

The base station shall set each other subfield to ‘1’ if the corresponding signaling encryption algorithm is supported by the base station; otherwise, the base station shall set the subfield to ‘0’.

The base station shall set the RESERVED subfield to ‘00000’.

UI_ENCRYPT_SUP – User information encryption supported indicator.

If ENC_SUPPORTED is equal to ‘1’, the base station shall include this field; otherwise, the base station shall omit this field. If this field is included, the base station shall set this field to indicate the supported user information encryption algorithms.

This field consists of the subfields shown in Table 2.7.1.3.2.4-9.

The base station shall set each subfield to ‘1’ if the corresponding user information encryption algorithm is supported by the base station; otherwise, the base station shall set the subfield to ‘0’.

ADD_FIELDS_LEN - Additional fields length.

The base station shall set this field to the number of octets included in the ADD_FIELDS.

ADD_FIELDS - Additional fields.

If the ADD_FIELDS_LEN field is not equal to ‘00000000’, the base station shall include the following fields as additional fields.

Field	Length (bits)
RESERVED	0 – 7 (as needed)

CCH_INFO_INCL - Common Channel information included indicator.

If the message is sent on the f-csch and additional information is included, the base station shall set this field to '1'; otherwise, the base station shall set this field to '0'.

The base station shall set this field to '1'.

MCC - Mobile Country Code.

If CCH_INFO_INCL is set to '1', the base station shall include this field and set it as follows; otherwise, the base station shall omit this field.

The base station shall set this field to the MCC (see 2.3.1)

IMSI_11_12 - 11th and 12th digits of the IMSI.

If CCH_INFO_INCL is set to '1', the base station shall include this field and set it as follows; otherwise, the base station shall omit this field.

The base station shall set this field to the IMSI_11_12 (see 2.3.1).

MAX_SLOT_CYCLE_INDEX - Maximum slot cycle index.

If CCH_INFO_INCL is set to '1', the base station shall include the field MAX_SLOT_CYCLE_INDEX and shall set this field as shown below; otherwise, the base station shall omit this field.

The base station shall set this field to the SLOT_CYCLE_INDEX value corresponding to the maximum slot cycle length permitted (see 2.6.2.1.1).

PWR_REP_THRESH - Power control reporting threshold.

If CCH_INFO_INCL is set to '1', the base station shall include the field PWR_REP_THRESH and shall set this field as shown below; otherwise, the base station shall omit this field.

The base station shall set this field to the number of bad frames (see [2]) to be received in a measurement period on the channel which carries the Power Control Subchannel before mobile stations are to generate a *Power Measurement Report Message* (see 2.6.4.1.1). If the base station sets PWR_THRESH_ENABLE to '1', it shall not set this field to '00000'.

PWR_REP_FRAMES - Power control reporting frame count.

If CCH_INFO_INCL is set to '1', the base station shall include the field PWR_REP_FRAMES and shall set this field as shown below; otherwise, the base station shall omit this field.

The base station shall set this field to the value such that the number given by

$$\lfloor 2^{(\text{PWR\_REP\_FRAMES}/2)} \times 5 \rfloor \text{ frames}$$

is the number of frames over which mobile stations are to count frame errors.

PWR_THRESH_ENABLE - Threshold report mode indicator.

If CCH_INFO_INCL is set to '1', the base station shall include the field PWR_THRESH_ENABLE and shall set this field as shown below; otherwise, the base station shall omit this field.

If mobile stations are to generate threshold *Power Measurement Report Messages*, the base station shall set this field to '1'. If mobile stations are not to generate threshold *Power Measurement Report Messages*, the base station shall set this field to '0'.

PWR_PERIOD_ENABLE - Periodic report mode indicator.

If CCH_INFO_INCL is set to '1', the base station shall include the field PWR_PERIOD_ENABLE and shall set this field as shown below; otherwise, the base station shall omit this field.

If mobile stations are to generate periodic *Power Measurement Report Messages*, the base station shall set this field to '1'. If mobile stations are not to generate periodic *Power Measurement Report Messages*, the base station shall set this field to '0'.

PWR_REP_DELAY - Power report delay.

The period that mobile stations wait following a *Power Measurement Report Message* before restarting frame counting for power control purposes.

If CCH_INFO_INCL is set to '1', the base station shall include the field PWR_REP_DELAY and shall set this field as shown below; otherwise, the base station shall omit this field.

The base station shall set this field to the power report delay value, in units of 4 frames (see 2.6.4.1.1).

RESELECT_INCLUDED - System reselection parameters included.

If CCH_INFO_INCL is set to '1', the base station shall include the field RESELECT_INCLUDED and shall set this field as shown below; otherwise, the base station shall omit this field.

If the base station is including system reselection parameters, the base station shall set this field to '1'; otherwise, the base station shall set this field to '0'.

EC_THRESH - Pilot power threshold.

If RESELECT_INCLUDED is included and is set to '1', the base station shall include the field EC_THRESH and shall set this field as shown below; otherwise, the base station shall omit this field.

The base station shall set this field to:

$$\lceil (pilot\_power\_threshold + 115) \rceil$$

where *pilot_power_threshold* is the pilot power, E_c, in dBm/1.23 MHz, below which the mobile station is to perform system reselection.

EC_I0_THRESH - Pilot E_c / I_o threshold.

If RESELECT_INCLUDED is included and is set to '1', the base station shall include the field EC_I0_THRESH and shall set this field as shown below; otherwise, the base station shall omit this field.

The base station shall set this field to:

$$\lfloor -20 \times \log_{10} (pilot\_threshold) \rfloor$$

where *pilot_threshold* is the pilot E_c/I_0 below which the mobile station is to perform system reselection.

BASE_LAT - Base station latitude.

If CCH_INFO_INCL is set to '1', the base station shall include this field and set it as shown below; otherwise, the base station shall omit this field.

The base station shall set this field to its latitude in units of 0.25 second, expressed as a two's complement signed number with positive numbers signifying North latitudes. The base station shall set this field to a value in the range -1296000 to 1296000 inclusive (corresponding to a range of -90° to +90°).

The base station shall set this field to all zeros if its latitude is not known.

BASE_LONG - Base station longitude.

If CCH_INFO_INCL is set to '1', the base station shall include this field and set it as shown below; otherwise, the base station shall omit this field.

The base station shall set this field to its longitude in units of 0.25 second, expressed as a two's complement signed number with positive numbers signifying East longitude. The base station shall set this field to a value in the range -2592000 to 2592000 inclusive (corresponding to a range of -180° to +180°).

The base station shall set this field to all zeros if its longitude is not known.

PILOT_REPORT - Pilot reporting indicator.

If CCH_INFO_INCL is set to '1', the base station shall include the field PILOT_REPORT and shall set this field as shown below; otherwise, the base station shall omit this field.

The base station shall set this field to '1' if the mobile station is to report the additional pilots which have pilot strengths exceeding T_ADD in all Enhanced Access Channel messages. The base station shall set this field to '0' if the mobile station is to report the additional pilots which have pilot strengths exceeding T_ADD only in the *Origination Message*, *Reconnect Message*, and the *Page Response Message*.

ACC_ENT_HO_ORDER - Access entry handoff permitted indicator.

If CCH_INFO_INCL is set to '1', the base station shall include this field and set it as described below; otherwise, the base station shall omit this field.

The base station shall set this field to '1' if the mobile station is permitted to perform an access entry handoff after receiving a message while performing the *Mobile Station Order and Message Processing Operation* in the *Mobile Station Idle State* (see 2.6.2.4); otherwise, the base station shall set this field to '0'.

ACCESS_HO - Access handoff permitted indicator.

If CCH_INFO_INCL is set to '1', the base station shall include this field and set it as described below; otherwise, the base station shall omit this field.

The base station shall set this field to '1' if the mobile station is permitted to perform an access handoff (see 2.6.3.1.3.2); otherwise, the base station shall set this field to '0'.

ACCESS_HO_MSG_RSP - Access handoff permitted for message response indicator.

If ACCESS_HO is included and set to '1', the base station shall include this field and set it as described below; otherwise, the base station shall omit this field.

The base station shall set this field to '1' if the mobile station is permitted to perform an access handoff after receiving a message and before responding to that message in the *System Access State*; otherwise, the base station shall set this field to '0'.

ACCESS_PROBE_HO - Access probe handoff permitted indicator.

If CCH_INFO_INCL is set to '1', the base station shall include this field and set it as described below; otherwise, the base station shall omit this field.

The base station shall set this field to '1' if the mobile station is permitted to perform an access probe handoff (see 2.6.3.1.3.3); otherwise, the base station shall set this field to '0'.

ACC_HO_LIST_UPD - Access handoff list update permitted indicator.

If ACCESS_PROBE_HO is included and is set to '1', the base station shall include this field and set it as described below; otherwise, the base station shall omit this field.

The base station shall set this field to '1' if the mobile station is permitted to update the access handoff list during an access attempt (see 2.6.3.1.7.2); otherwise, the base station shall set this field to '0'.

ACC_PROBE_HO_OTHER_MSG - Access probe handoff permitted for messages other than the *Origination Message*, *Reconnect Message*, and the *Page Response Message*.

If ACCESS_PROBE_HO is included and set to '1', the base station shall include this field and set it as described below; otherwise, the base station shall omit this field.

The base station shall set this field to '1' if the mobile station is permitted to perform an access probe handoff for messages other than the *Origination Message*, *Reconnect Message*, and the *Page Response Message*. The base station shall set this field to '0' if the mobile station is permitted to perform an access probe handoff only for the *Origination Message*, *Reconnect Message*, and the *Page Response Message*. See 2.6.3.1.3.3.

MAX_NUM_PROBE_HO - Maximum number of times that the mobile station is permitted to perform an access probe handoff.

If ACCESS_PROBE_HO is included and set to '1', the base station shall include this field and set it as described below; otherwise, the base station shall omit this field.

The base station shall set this field to the maximum number of times the mobile station is allowed to perform an access probe handoff within an access attempt minus one.

NUM_FCCCH - Total number of Forward Common Control Channels.

If CCH_INFO_INCL is set to '1', the base station shall include this field and shall set it as shown below; otherwise, the base station shall omit this field.

The base station shall set this field to the total number of Forward Common Control Channels on this CDMA Channel.

If this is not a pilot beacon base station, the base station shall set this field to an integer value greater than 0.

FCCCH_RATE – Rate words for the Forward Common Control Channels.

If CCH_INFO_INCL is set to '1' and NUM_FCCCH is not equal to '0', the base station shall include this field and shall set it as shown below; otherwise, the base station shall omit this field.

The base station shall set this field to the FCCCH rate field value shown in Table 3.7.2.3.2.31-1 corresponding to the data rate used on the Forward Common Control Channels in the system.

Table 3.7.2.3.2.31-1. Forward Common Control Channel Rate Words

FCCCH Rate Field (binary)	Forward Common Control Channel rate word
000	9600 bps, 20 ms frame size
001	19200 bps, 20 ms frame size
010	19200 bps, 10 ms frame size
011	38400 bps, 20 ms frame size
100	38400 bps, 10 ms frame size
101	38400 bps, 5 ms frame size
110 – 111	Reserved

FCCCH_CODE_RATE - Code Rate for the Forward Common Control Channels.

If CCH_INFO_INCL is set to ‘1’ and NUM_FCCCH is not equal to ‘0’, the base station shall include this field and shall set it as shown below; otherwise, the base station shall omit this field.

If the FCCCH is operating in Spreading Rate 1, the base station shall set this field to ‘0’ if the FCCCH Code Rate is 1/4 (see [2]). The base station shall set this field to ‘1’ if the FCCCH Code Rate is 1/2 (see [2]).

If the FCCCH is operating in Spreading Rate 3, the base station shall set this field to ‘0’.

The base station shall include NUM_FCCCH occurrences of the following one field record:

FCCCH_CODE_CHAN - Code channel index for the Forward Common Control Channel.

The base station shall set this field to the code channel index (see [2]) in the range 1 to 255 inclusive that the mobile station is to use on the Forward Common Control Channel.

BCAST_INDEX - Broadcast index.

If CCH_INFO_INCL is set to ‘1’, the base station shall include the field BCAST_INDEX and shall set this field as shown below; otherwise, the base station shall omit this field.

If Periodic Enhanced Broadcast Paging is disabled, the base station shall set this field to ‘000’; otherwise, the base station shall set this field to the Broadcast Index (see 2.6.2.1.1.3.3.2).

NUM_BCCH_BCAST - The number of Broadcast Control Channels used for transmitting broadcast messages.

If CCH_INFO_INCL is set to '1', the base station shall include this field and set it as shown below; otherwise, the base station shall omit this field.

The base station shall set this field to the number of Broadcast Control Channels used for transmitting broadcast messages.

If the NUM_BCCH_BCAST field is included, the base station shall set NUM_BCCH_BCAST occurrences of the following three-field record, where the ith occurrence corresponds to a BCCH indexed by BCN of i+1:

BCCH_CODE_CHAN - The Walsh Code index for the Broadcast Control Channel.

The base station shall set this field to the Walsh code corresponding to the Broadcast Control Channel.

BRAT - BCCH data rate.

The base station shall set this field to the BRAT field value shown in Table 3.7.2.3.2.31-2 corresponding to the data rate used by the Broadcast Control Channel to which the mobile station is being directed.

Table 3.7.2.3.2.31-2. Broadcast Control Channel Data Rate

BRAT Field (binary)	Broadcast Control Channel data rate
00	4800 bps
01	9600 bps
10	19200 bps
11	Reserved

BCCH_CODE_RATE - BCCH code rate.

For spreading rate 1, the base station shall set this field to '0' if the BCCH Code Rate is 1/4 (see [2]). For spreading rate 1, the base station shall set this field to '1' if the BCCH code rate is 1/2 (see [2]). For spreading rate 3, the base station shall set this field to '0'.

QPCH_SUPPORTED - Quick Paging Channel Supported Indication.

If CCH_INFO_INCL is set to '1', the base station shall include the field QPCH_SUPPORTED and shall set this field as shown below; otherwise, the base station shall omit this field.

If the base station supports Quick Paging Channel operation, the base station shall set this field to '1'; otherwise the base station shall set this field to '0'.

NUM_QPCH - Number of Quick Paging Channels.

If QPCH_SUPPORTED is included and set to '1', the base station shall include this field and set it as described below; otherwise, the base station shall omit this field.

The base station shall set this field to the number of Quick Paging Channels on this CDMA Channel. The base station shall not set this field to '00'.

QPCH_RATE - Quick Paging Channel indicator rate.

If QPCH_SUPPORTED is included and set to '1', the base station shall include this field and set it as described below; otherwise, the base station shall omit this field.

The base station shall set this field to the QPCH_RATE field value shown in Table 3.7.2.3.2.13-2 corresponding to the indicator rate used by the Quick Paging Channel in the system.

QPCH_POWER_LEVEL_PAGE - Quick Paging Channel paging indicator transmit power level.

If QPCH_SUPPORTED is included and set to '1', the base station shall include this field and set it as described below; otherwise, the base station shall omit this field.

The base station shall set this field to the Quick Paging Channel paging indicator transmit power level relative to that of the Pilot Channel as specified in Table 3.7.2.3.2.31-3.

Table 3.7.2.3.2.31-3. Quick Paging Channel Transmit Power Level

QPCH_POWER_LEVEL_PAGE QPCH_POWER_LEVEL_CONFIG QPCH_POWER_LEVEL_BCAST (binary)	Transmit Power Level
000	5 dB below the Pilot Channel Transmit Power
001	4 dB below the Pilot Channel Transmit Power
010	3 dB below the Pilot Channel Transmit Power
011	2 dB below the Pilot Channel Transmit Power
100	1 dB below the Pilot Channel Transmit Power
101	Same as the Pilot Channel Transmit Power
110	1 dB above the Pilot Channel Transmit Power
111	2 dB above the Pilot Channel Transmit Power

QPCH_CCI_SUPPORTED - Quick Paging Channel configuration change indicator supported.

If QPCH_SUPPORTED is included and set to ‘1’, the base station shall include this field and set it as described below; otherwise, the base station shall omit this field.

If the base station supports configuration change indicators on the Quick Paging Channel, the base station shall set this field to ‘1’; otherwise the base station shall set this field to ‘0’.

QPCH_POWER_LEVEL_CONFIG - Quick Paging Channel configuration change indicator transmit power level.

If QPCH_CCI_SUPPORTED is included and set to ‘1’, the base station shall include this field and set it as described below; otherwise, the base station shall omit this field.

The base station shall set this field to the Quick Paging Channel configuration change indicator transmit power level relative to that of the Pilot Channel as specified in Table 3.7.2.3.2.31-3.

If SR3_INCL is set to ‘1’ and QPCH_SUPPORTED is included and set to ‘1’, the base station shall include NUM_QPCH occurrences of the following one field record:

QPCH_CODE_CHAN - Code channel index of the Quick Paging Channel for Spreading Rate 3.

The base station shall set this field to the code channel index (see [2]) in the range 1 to 255 inclusive that the mobile station is to use on the Quick Paging Channel for Spreading Rate 3.

QPCH_BI_SUPPORTED - Quick Paging Channel broadcast indicator supported.

If QPCH_SUPPORTED is included and set to ‘1’, the base station shall include this field and set it as described below; otherwise, the base station shall omit this field.

If the base station supports broadcast indicators on the Quick Paging Channel, the base station shall set this field to ‘1’; otherwise the base station shall set this field to ‘0’.

QPCH_POWER_LEVEL_BCAST - Quick Paging Channel broadcast indicator transmit power level.

If QPCH_BI_SUPPORTED is included and set to ‘1’, the base station shall include this field and set it as described below; otherwise, the base station shall omit this field.

The base station shall set this field to the Quick Paging Channel broadcast indicator transmit power level relative to that of the Pilot Channel as specified in Table 3.7.2.3.2.31-3.

SDB_SUPPORTED - Short Data Burst supported indicator.

If CCH_INFO_INCL is set to ‘1’, the base station shall include the field SDB_SUPPORTED and shall set this field as shown below; otherwise, the base station shall omit this field.

The base station shall set this field to ‘1’ if the mobile station is permitted to send a Short Data Burst; otherwise, the base station shall set this field to ‘0’.

BROADCAST_GPS_ASST - Broadcast GPS Assist Indicator.

If CCH_INFO_INCL is set to ‘1’, the base station shall include the field BROADCAST_GPS_ASST and shall set this field as shown below; otherwise, the base station shall omit this field.

The base station shall set this field to ‘1’ if it supports Broadcast GPS Assist capability; otherwise, the base station shall set this field to ‘0’.

RLGAIN_TRAFFIC_PILOT - Gain adjustment of the Reverse Traffic Channel relative to the Reverse Pilot Channel for Radio Configurations greater than 2.

If CCH_INFO_INCL is set to ‘1’, the base station shall include the field RLGAIN_TRAFFIC_PILOT and shall set this field as shown below; otherwise, the base station shall omit this field.

The base station shall set this field to the correction factor to be used by mobile stations in setting the power of a reverse traffic channel, expressed as a two's complement value in units of 0.125 dB (see [2]).

REV_PWRCNTL_DELAY_INCL - Reverse Power Control Delay included indicator.

If CCH_INFO_INCL is set to '1', the base station shall include this field and set it as shown below; otherwise, the base station shall omit this field.

The base station shall set this field to '1' if the base station includes the REV_PWR_CNTL_DELAY field in this message; otherwise, the base station shall set this field to '0'.

REV_PWR_CNTL_DELAY - The reverse power control delay.

If REV_PWR_CNTL_DELAY_INCL is included and set to '1', the base station shall include this field and set it as follows; otherwise, the base station shall omit this field.

The base station shall set this field to the closed-loop reverse power control delay minus one (the closed-loop reverse power control delay is the time between the end of a gated-on reverse PCG and the beginning of the reverse PCG where the corresponding feedback is sent on the Forward Power Control Subchannel, see [2]), in units of 1.25 ms.

MOB_QOS - Indicator granting permission to the mobile station to request QoS parameter settings in the *Origination Message*, *Origination Continuation Message*, or *Enhanced Origination Message*.

If CCH_INFO_INCL is set to '1', the base station shall include this field and set it as shown below; otherwise, the base station shall omit this field.

The base station shall set this field to '1', if the mobile station is allowed to include a QoS record in the *Origination Message*, *Origination Continuation Message*, or *Enhanced Origination Message*; otherwise, the base station shall set this field to '0'.

USE_SYNC_ID - Sync ID supported indicator.

If CCH_INFO_INCL is set to '1', the base station shall include this field and set it as shown below; otherwise, the base station shall omit this field.

The base station shall set this field to '1' to indicate that the mobile station is permitted to include the SYNC_ID field in the *Page Response Message*, the *Reconnect Message*, the *Origination Message* and the *Enhanced Origination Message*; otherwise, the base station shall set this field to '0'.

NUM_OPT_MSG_BITS - Number of optional overhead messages to be sent.

If CCH_INFO_INCL is set to '1, the base station shall include this field and shall set this field as shown below; otherwise, the base station shall omit this field.

The base station shall set this field to the number of optional overhead messages to be sent.

SENDING_RAND - *ANSI-41 RAND Message* indicator.

If NUM_OPT_MSG_BITS is included and is equal to or greater than 1, the base station shall include the field SENDING_RAND and shall set this field as shown below; otherwise, the base station shall omit this field.

If the base station is sending the *ANSI-41 RAND Message* on the Primary Broadcast Control Channel, it shall set this field to '1'; otherwise, it shall set this field to '0'.

PRI_NGHBR_LST - *Private Neighbor List Message* indicator.

If NUM_OPT_MSG_BITS is included and is equal to or greater than 2, the base station shall include the field PRI_NGHBR_LST and shall set this field as shown below; otherwise, the base station shall omit this field.

If the base station is sending the *Private Neighbor List Message* on the Primary Broadcast Control Channel, it shall set this field to '1'; otherwise, it shall set this field to '0'.

USER_ZONE_ID - *User Zone Identification Message* indicator.

If NUM_OPT_MSG_BITS is included and is equal to or greater than 3, the base station shall include the field USER_ZONE_ID and shall set this field as shown below; otherwise, the base station shall omit this field.

If the base station is sending the *User Zone Identification Message* on the Primary Broadcast Control Channel, it shall set this field to '1'; otherwise, it shall set this field to '0'.

EXT_GLOBAL_REDIRECT - Extended *Global Service Redirection Message* indicator.

If NUM_OPT_MSG_BITS is included and is equal to or greater than 4, the base station shall include the field EXT_GLOBAL_REDIRECT and shall set this field as shown below; otherwise, the base station shall omit this field.

If the base station is sending the *Extended Global Service Redirection Message* on the Primary Broadcast Control Channel, it shall set this field to '1'; otherwise, the base station shall set this field to '0'.

AP_PILOT_INFO - *Access Point Pilot Information Message* indicator.

If NUM_OPT_MSG_BITS is included and is equal to or greater than 5, the base station shall include the field AP_PILOT_INFO and shall set this field as shown below; otherwise, the base station shall omit this field.

If the base station is sending the *Access Point Pilot Information Message* on the Primary Broadcast Control Channel, it shall set this field to '1'; otherwise, the base station shall set this field to '0'.

AP_IDT - *Access Point Identification Message* indicator.

If NUM_OPT_MSG_BITS is included and is equal to or greater than 6, the base station shall include the field AP_IDT and shall set this field as shown below; otherwise, the base station shall omit this field.

If the base station is sending the *Access Point Identification Message* on the Primary Broadcast Control Channel, it shall set this field to '1'; otherwise, the base station shall set this field to '0'.

AP_ID_TEXT - *Access Point Identification Text Message* indicator.

If NUM_OPT_MSG_BITS is included and is equal to or greater than 7, the base station shall include the field AP_ID_TEXT and shall set this field as shown below; otherwise, the base station shall omit this field.

If the base station is sending the *Access Point Identification Text Message* on the Primary Broadcast Control Channel, it shall set this field to '1'; otherwise, the base station shall set this field to '0'.

GEN_OVHD_INF_IND - *General Overhead Information Message* indicator.

If NUM_OPT_MSG is equal to or greater than 8, the base station shall include the field GEN_OVHD_INF_IND and shall set this field as shown below; otherwise, the base station shall omit this field.

If the base station is sending the *General Overhead Information Message* on the Paging Channel, it shall set this field to '1'; otherwise, the base station shall set this field to '0'.

FD_CHAN_LST_IND - *Flex Duplex CDMA Channel List Message* indicator.

If NUM_OPT_MSG is equal to or greater than 9, the base station shall include the field FD_CHAN_LST_IND and shall set this field as shown below; otherwise, the base station shall omit this field.

If the base station is sending the *Flex Duplex CDMA Channel List Message* on the Primary Broadcast Control Channel, it shall set this field to '1'; otherwise, the base station shall set this field to '0'.

ATIM_IND - *Alternative Technologies Information Message* indicator.

If NUM_OPT_MSG is equal to or greater than 10, the base station shall include the field ATIM_IND and shall set this field as shown below; otherwise, the base station shall omit this field.

If the base station is sending the *Alternative Technologies Information Message* on the Paging Channel, it shall set this field to '1'; otherwise, the base station shall set this field to '0'.

RESERVED - Reserved bits.

If NUM_OPT_MSG_BITS is included and is equal to or greater than 11, the base station shall include the field RESERVED and shall set this field as shown below; otherwise, the base station shall omit this field.

The base station shall add (NUM_OPT_MSG_BITS – 10) reserved bits. The base station shall set these bits to '0'.

PILOT_INFO_REQ_SUPPORTED - Pilot information request supported indicator.

If CCH_INFO_INCL is set to '1', the base station shall include this field and set it as shown below; otherwise, the base station shall omit this field.

If the base station supports mobile station request for pilot information using the "Pilot Information" record in the *Base Station Status Request Message*, the base station shall set this field to '1'; otherwise, the base station shall set this field to '0'.

BAND_CLASS_INFO_REQ – Band class information request indicator.

If CCH_INFO_INCL is set to '1', the base station shall include this field and set it as shown below; otherwise, the base station shall omit this field.

The base station shall set this field to '1' if the ALT_BAND_CLASS field is included in this message; otherwise, the base station shall set this field to '0'.

ALT_BAND_CLASS – Alternate band class.

If BAND_CLASS_INFO_REQ is not included, or is included and set to '0', then the base station shall omit this field; otherwise, the base station shall include this field and set it as follows:

The base station shall set this field to an alternate CDMA band class (see [30]) supported by the base station. The mobile station is to indicate its capability to support the alternate band class in the *Origination Message* and *Page Response Message*.

CDMA_OFF_TIME_REP_SUP_IND – CDMA off time report supported indicator.

If the base station supports mobile station report for CDMA off time information using the *CDMA Off Time Report Message*, the base station shall set this field to '1'; otherwise, the base station shall set this field to '0'.

CDMA_OFF_TIME_REP_THRESHOLD_UNIT – CDMA off time report threshold unit

If CDMA_OFF_TIME_REP_SUP_IND is set to '0', the base station shall omit this field; otherwise, the base station shall include this field and set it as follows:

The base station shall set this field to the time unit used in CDMA_OFF_TIME_REP_THRESHOLD, as specified in Table 3.7.2.3.2.13-5

CDMA_OFF_TIME_REP_THRESHOLD – CDMA off time report threshold

If CDMA_OFF_TIME_REP_SUP_IND is set to ‘0’, the base station shall omit this field; otherwise, the base station shall include this field and set it as follows:

The base station shall set this field to the time in units of CDMA_OFF_TIME_REP_THRESHOLD_UNIT such that if the mobile station goes away from the CDMA traffic channel longer than this value, the mobile station is to send a *CDMA Off Time Report Message*.

CHM_SUPPORTED – Control Hold Mode supported indicator.

The base station shall set this field to ‘1’ to indicate that the base station supports the Control Hold Mode; otherwise, the base station shall set this field to ‘0’.

RELEASE_TO_IDLE_IND - Release to Idle State allowed indicator.

If the mobile station is allowed to return to the *Mobile Station Idle State* upon call release, the base station shall set this field to ‘1’; otherwise, the base station shall set this field to ‘0’.

RECONNECT_MSG_IND - *Reconnect Message* supported indicator.

The base station shall set this field to ‘0’ if the mobile station is not allowed to send a *Reconnect Message* instead of an *Origination Message* or a *Page Response Message*; otherwise, the base station shall set this field to ‘1’.

T_TDROP_RANGE_INCL - Drop timer range value included indicator.

The base station shall set this field to '1' if the T_TDROP_RANGE field is included in this message; otherwise, the base station shall set this field to '0'.

T_TDROP_RANGE - Drop timer range value.

Timer range value to use in association with the T_TDROP parameter when determining the drop timer expiration.

If T_TDROP_RANGE_INCL is set to '0', the base station shall omit this field; otherwise, the base station shall set this field to the T_TDROP_RANGE value shown in Table 2.6.6.2.3-2 corresponding to the timer expiration range value to be used by the mobile station.

FOR_PDCH_SUPPORTED - Forward Packet Data Channel supported indicator.

If the base station supports the Forward Packet Data Channel (F-PDCH), the base station shall set this field to ‘1’; otherwise, the base station shall set this field to ‘0’.

PDCH_CHM_SUPPORTED – PDCH Control Hold Mode supported indicator.

If FOR_PDCH_SUPPORTED is set to ‘0’, the base station shall omit this field; otherwise, the base station shall include this field and set it as follows:

The base station shall set this field to ‘1’ to indicate that the base station supports the PDCH Control Hold Mode; otherwise, the base station shall set this field to ‘0’

PDCH_PARMS_INCL - Forward Packet Data Channel related parameters included indicator.

If FOR_PDCH_SUPPORTED is set to '0', the base station shall omit this field; otherwise, the base station shall set this field as follows:

The base station shall set this field to '1' if the following F-PDCH related fields are included in this message; otherwise, the base station shall set this field to '0'.

FOR_PDCH_RLGAIN_INCL - Forward Packet Data Channel parameters related to reverse link adjustment gains included indicator.

If PDCH_PARMS_INCL is omitted, or if it is included and set to '0', the base station shall omit this field; otherwise, the base station shall include this field, and set it as follows.

The base station shall set this field to '1' if the following F-PDCH gain related fields are included in this message; otherwise, the base station shall set this field to '0'.

RLGAIN_ACKCH_PILOT - Reverse Acknowledgment Channel to pilot adjustment gain.

If FOR_PDCH_RLGAIN_INCL is omitted, or if it is included and set to '0', the base station shall omit this field; otherwise, the base station shall include this field, and set it as follows.

The base station shall set this field to the Reverse Acknowledgment Channel to pilot adjustment gain expressed as a two's complement value in units of 0.125 dB (see [2]).

RLGAIN_CQICH_PILOT - Reverse Channel Quality Indicator Channel to pilot adjustment gain.

If FOR_PDCH_RLGAIN_INCL is omitted, or if it is included and set to '0', the base station shall omit this field; otherwise, the base station shall include this field, and set it as follows.

The base station shall set this field to the Reverse Channel Quality Indicator Channel to pilot adjustment gain expressed as a two's complement value in units of 0.125 dB (see [2]).

NUM_SOFT_SWITCHING_FRAMES - Number of frames for R-CQICH soft switching.

If PDCH_PARMS_INCL is not included, or is included and set to '0', the base station shall omit this field; otherwise, the base station shall include this field and set it as follows:

The base station shall set this field to the duration of the cell switching period, in units of 20 ms, minus one, during which the mobile station is to transmit the cell switch sequence on the R-CQICH when it switches between two pilots which are in different groups (see [3]).

NUM_SOFTER_SWITCHING_FRAMES - Number of frames for R-CQICH softer switching.

If PDCH_PARMS_INCL is not included, or is included and set to '0', the base station shall omit this field; otherwise, the base station shall include this field and set it as follows:

The base station shall set this field to the duration of the cell switching period, in units of 20 ms, minus one, during which the mobile station is to transmit the cell switch sequence on the R-CQICH when it switches between two pilots which are in the same group (see [3]).

NUM_SOFT_SWITCHING_SLOTS - Number of slots per frame for R-CQICH soft switching.

If PDCH_PARMS_INCL is not included, or is included and set to '0', the base station shall omit this field; otherwise, the base station shall include this field and set it as follows:

The base station shall set this field to the duration of the cell switching slots within a switching frame, in units of 1.25 ms as specified in Table 3.7.2.3.2.21-10, during which the mobile station is to transmit the cell switch indication by using Walsh cover of target on the R-CQICH when it switches between two pilots which are in different groups.

NUM_SOFTER_SWITCHING_SLOTS - Number of slots per frame for R-CQICH softer switching.

If PDCH_PARMS_INCL is not included, or is included and set to '0', the base station shall omit this field; otherwise, the base station shall include this field and set it as follows:

The base station shall set this field to the duration of the cell switching slots within a switching frame, in units of 1.25 ms as specified in Table 3.7.2.3.2.21-10, during which the mobile station is to transmit the cell switch indication by using Walsh cover of target on the R-CQICH when it switches between two pilots which are in the same group.

PDCH_SOFT_SWITCHING_DELAY - F-PDCH soft switching delay.

If PDCH_PARMS_INCL is not included, or is included and set to '0', the base station shall omit this field; otherwise, the base station shall include this field and set it as follows:

The base station shall set this field to the minimum interruption seen by the mobile station, in units of 10 ms, minus one, when the mobile station is to transmit the cell switch sequence on the R-CQICH channel when it switches between two pilots which are in different groups (see [3]).

PDCH_SOFTER_SWITCHING_DELAY - F-PDCH softer switching delay.

If PDCH_PARMS_INCL is not included, or is included and set to '0', the base station shall omit this field; otherwise, the base station shall include this field and set it as follows:

The base station shall set this field to the minimum interruption seen by the mobile station, in units of 10 ms, minus one, when the mobile station is to transmit the cell switch sequence on the R-CQICH channel when it switches between two pilots which are in the same group (see [3]).

WALSH_TABLE_ID - The index of the Walsh Table used.

If PDCH_PARMS_INCL is not included, or is included and set to ‘0’, the base station shall omit this field; otherwise, the base station shall set this field as follows:

The base station shall set this field to the index of the Walsh Table being used by the Packet Data Channel. (See [3]).

NUM_PDCCH - The number of Packet Data Control Channels supported.

If PDCH_PARMS_INCL is not included, or is included and set to ‘0’, the base station shall omit this field; otherwise, the base station shall include this field and set it as follows:

The base station shall set this field to ‘000’ if the pilot supports one Packet Data Control Channel. The base station shall set this field to ‘001’ if the pilot supports two Packet Data Control Channels. The base station shall not set this field to any other value.

The base station shall include *NUM_PDCCH+1* occurrences of the following one-field record:

FOR_PDCCH_WALSH - Forward Packet Data Control Channel Walsh code assignment.

If PDCH_PARMS_INCL is not included, or is included and set to ‘0’, the base station shall omit this field; otherwise, the base station shall include this field and set it as follows:

The base station shall set this field to the Walsh code assignment for the Forward Packet Data Control Channel.

If NUM_PDCCH is set to ‘001’, the Walsh code of PDCCH0 shall be included first, followed by the Walsh code for PDCCH1.

IMSI_10_INCL - IMSI_10 included.

If CCH_INFO_INCL is set to ‘1’, the base station shall include this field and set it as follows; otherwise, the base station shall omit this field.

If the MNC is a 3-digit number, the base station shall set this field to ‘1’; otherwise, the base station shall set this field to ‘0’.

IMSI_10 - The least significant digit of MNC when the MNC is a 3-digit number.

If IMSI_10_INCL is not included, or is included and set to ‘0’, the base station shall omit this field; otherwise, the base station shall set this field to the least significant digit of MNC converted to binary by the standard decimal-to-binary conversion as shown in Table 2.3.1.1-1.

NEG_SLOT_CYCLE_INDEX_SUP – Negative slot cycle index supported indicator.

The base station shall set this field to ‘1’ if it supports negative values of the preferred slot cycle index ($SLOT\_CYCLE\_INDEX_p$); otherwise, the base station shall set this field to ‘0’.

RER_MODE_SUPPORTED - Radio environment reporting mode supported indicator.

If the base station supports radio environment reporting mode, the base station shall set this field to '1'; otherwise, the base station shall set this field to '0'.

AUTO_FCSO_ALLOWED - Autonomous *Fast Call Setup Order* allowed indicator.

The base station shall set this field to '1' if the mobile station is allowed to send an autonomous *Fast Call Setup Order*; otherwise, the base station shall set this field to '0'.

SENDING_BSPM - *BCMC Service Parameters Message* indicator.

If the base station is sending the *BCMC Service Parameters Message* on the Primary Broadcast Control Channel, it shall set this field to '1'; otherwise, it shall set this field to '0'.

BSPM_PERIOD_INDEX - BSPM Transmission Periodicity Index.

If the SENDING_BSPM field is set to '0', the base station shall omit this field; otherwise, the base station shall include this field and set it as follows:

The base station shall set this field to the BSPM transmission periodicity index corresponding to the periodicity with which the BSPM with DIFF_BSPM equal to '0' is transmitted on the Primary Broadcast Control Channel.

REV_PDCH_SUPPORTED - Reverse Packet Data Channel supported indicator.

If FOR_PDCH_SUPPORTED is set to '0', the base station shall omit this field; otherwise, the base station shall include this field and set it as follows:

If the base station supports the Reverse Packet Data Channel (R-PDCH), the base station shall set this field to '1'; otherwise, the base station shall set this field to '0'.

REV_PDCH_PARMS_INCL - Reverse Packet Data Channel related parameters included indicator.

If REV_PDCH_SUPPORTED is omitted, or if it is included and set to '0', the base station shall omit this field; otherwise, the base station shall include this field and set it as follows:

The base station shall set this field to '1' if the R-PDCH parameters are included in this message; otherwise, the base station shall set this field to '0'.

REV_PDCH_RLGAIN_INCL - Reverse Packet Data Channel parameters related to reverse link adjustment gains included indicator.

If REV_PDCH_PARMS_INCL is omitted, or if it is included and set to '0', the base station shall omit this field; otherwise, the base station shall include this field, and set it as follows.

The base station shall set this field to '1' if the following R-PDCH gain related fields are included in this message; otherwise, the base station shall set this field to '0'.

RLGAIN_SPICH_PILOT - Reverse Secondary Pilot Channel to pilot adjustment gain.

If REV_PDCH_RLGAIN_INCL is omitted, or if it is included and set to '0', the base station shall omit this field; otherwise, the base station shall include this field, and set it as follows.

The base station shall set this field to the Reverse Secondary Pilot Channel to pilot adjustment gain expressed as a two's complement value in units of 0.125 dB (see [2]).

RLGAIN_REQCH_PILOT - Reverse Request Channel to pilot adjustment gain.

If REV_PDCH_RLGAIN_INCL is omitted, or if it is included and set to '0', the base station shall omit this field; otherwise, the base station shall include this field, and set it as follows.

The base station shall set this field to the Reverse Request Channel to pilot adjustment gain expressed as a two's complement value in units of 0.125 dB (see [2]).

RLGAIN_PDCCH_PILOT - Reverse Packet Data Control Channel to pilot adjustment gain.

If REV_PDCH_RLGAIN_INCL is omitted, or if it is included and set to '0', the base station shall omit this field; otherwise, the base station shall include this field, and set it as follows.

The base station shall set this field to the Reverse Packet Data Channel to pilot adjustment gain expressed as a two's complement value in units of 0.125 dB (see [2]).

REV_PDCH_PARMS_1_INCL - Reverse Packet Data Channel parameters subset included indicator.

If REV_PDCH_PARMS_INCL is omitted, or if it is included and set to '0', the base station shall omit this field; otherwise, the base station shall include this field, and set it as follows.

The base station shall set this field to '1' if the following R-PDCH parameters are included in this message; otherwise, the base station shall set this field to '0'.

REV_PDCH_TABLE_SEL - Reverse Packet Data Channel Table selector.

If REV_PDCH_PARMS_1_INCL is omitted, or if it is included and set to '0', the base station shall omit this field; otherwise, the base station shall include this field, and set it as follows.

The base station shall set this field to the Reverse Packet Data Channel Table selector (see [2]).

REV_PDCH_MAX_AUTO_TPR - Reverse Packet Data Channel maximum traffic to pilot ratio for autonomous transmission.

If REV_PDCH_PARMS_1_INCL is omitted, or if it is included and set to '0', the base station shall omit this field; otherwise, the base station shall include this field and set it as follows.

The base station shall set this field to the maximum traffic to pilot ratio for autonomous transmission on the Reverse Packet Data Channel (see [2] and [3]).

The base station shall set this field to a value in the range 0 to 18 dB inclusive in units of 0.125 dB.

REV_PDCH_NUM_ARQ_ROUNDS_NORMAL - Maximum number of allowed ARQ rounds on the Reverse PDCH in the non-boosted mode.

If REV_PDCH_PARMS_1_INCL is omitted, or if it is included and set to ‘0’, the base station shall omit this field; otherwise, the base station shall include this field and set it as follows:

The base station shall set this field to one less the maximum number of allowed ARQ rounds on the Reverse PDCH in the non-boosted mode. The base station shall set this field to 0, 1, or 2 corresponding to 1, 2, or 3 rounds respectively (See [3]).

REV_PDCH_OPER_PARMS_INCL - Reverse Packet Data Channel operational parameters included indicator.

If REV_PDCH_PARMS_INCL is omitted, or if it is included and set to ‘0’, the base station shall omit this field; otherwise, the base station shall include this field, and set it as follows.

The base station shall set this field to ‘1’ if the following R-PDCH operational parameters are included in this message; otherwise, the base station shall set this field to ‘0’.

REV_PDCH_MAX_SIZE_ALLOWED_ENCODER_PACKET - Maximum Allowed Reverse PDCH encoder packet size.

If REV_PDCH_OPER_PARMS_INCL is omitted, or if it is included and set to ‘0’, the base station shall omit this field; otherwise, the base station shall include this field and set it as follows.

The base station shall set this field to the maximum size encoder packet that the mobile station is allowed to use. (see [2] and [3]).

The base station shall set this field to a value in the range 0 to 10 inclusive, corresponding to the encoder packet sizes 192, 408, 792, 1560, 3096, 4632, 6168, 9240, 12312, 15384, and 18456 bits respectively.

REV_PDCH_DEFAULT_PERSISTENCE - Reverse Packet Data Channel default initial persistence.

If REV_PDCH_OPER_PARMS_INCL is omitted, or if it is included and set to ‘0’, the base station shall omit this field; otherwise, the base station shall include this field and set it as follows:

The base station shall set this field to ‘1’ if the mobile station is to be persistent at the call setup; otherwise, the base station shall set this field to ‘0’ (See [3]).

REV_PDCH_RESET_PERSISTENCE - Reverse Packet Data Channel reset persistence indicator.

If REV_PDCH_OPER_PARMS_INCL is omitted, or if it is included and set to '0', the base station shall omit this field; otherwise, the base station shall include this field and set it as follows:

The base station shall set this field to '1' if, at the end of a persistent grant, the mobile station shall reset its persistent indicator to persistent; otherwise, the base station shall set this field to '0' if the mobile station shall reset its persistent indicator to non-persistent (See [3]).

REV_PDCH_GRANT_PRECEDENCE - Reverse Packet Data Channel Grant Precedence Indicator.

If REV_PDCH_OPER_PARMS_INCL is omitted, or if it is included and set to '0', the base station shall omit this field; otherwise, the base station shall include this field and set it as follows:

The base station shall set this field to '1' if unicast Forward Grant Channel messages have precedence over Rate Control commands; otherwise, the base station shall set this field to '0' to indicate that Rate Control down commands from non-serving sectors have precedence over Forward Grant Channel messages (see [3]).

REV_PDCH_MSIB_SUPPORTED - Reverse PDCH MSIB usage indicator.

If REV_PDCH_OPER_PARMS_INCL is omitted, or if it is included and set to '0', the base station shall omit this field; otherwise, the base station shall include this field and set it as follows:

The base station shall set this field to '1' if the mobile station is to use the MSIB bit on the Reverse Packet Data Control Channel; otherwise, the base station shall set this field to '0' (see [3]).

REV_PDCH_SOFT_SWITCHING_RESET_IND - Reverse Packet Data Channel soft switching reset indicator.

If REV_PDCH_OPER_PARMS_INCL is omitted, or if it is included and set to '0', the base station shall omit this field; otherwise, the base station shall include this field and set it as follows:

The base station shall set this field to '1' if the mobile station is to initialize RPDCHCF when soft selection occurs in the FPDCHCF; otherwise, the base station shall set this field to '0' (see [3]).

SDB_IN_RCNM_IND - Short Data Burst allowed in *Reconnect Message* indicator.

If RECONNECT_MSG_IND is set to '0' or SDB_SUPPORTED is set to '0', the base station shall omit this field; otherwise, the base station shall include this field and set it as follows:

The base station shall set this field to '1' if the mobile station is allowed to include a Short Data Burst (see [30]) in the *Reconnect Message*; otherwise, the base station shall set this field to '0'.

CAND_BAND_INFO_REQ - Candidate band class information request indicator

If CCH_INFO_INCL is set to '1', the base station shall include this field and set it as shown below; otherwise, the base station shall omit this field.

The base station shall set this field to '1' when requesting mobiles to report whether various candidate band class and band subclass (if applicable) combinations are supported; otherwise, the base station shall set this field to '0'.

The base station shall not include more than 16 band class-band subclass queries in this message.

NUM_CAND_BAND_CLASS - Number of candidate band classes

If CAND_BAND_INFO_REQ is not included, or is included and set to '0', the base station shall omit this field; otherwise, the base station shall include this field and set it as follows:

The base station shall set this field to the number of candidate band classes included in the record minus one.

If CAND_BAND_INFO_REQ is included and set to '1', the base station shall include NUM_CAND_BAND_CLASS + 1 occurrences of the following record:

CAND_BAND_CLASS - Candidate band class

The base station shall set this field to a band class (see [30]) for which the mobile is to report it's capabilities upon system access. It may be used in conjunction with the BAND_SUBCLASS_IND fields to specify band subclass(es) for which the mobile is to report it's capabilities upon system access.

SUBCLASS_INFO_INCL - Band subclass information included

The base station shall set this field to '0' when no band subclasses are associated with CAND_BAND_CLASS or if the base station requires only the band class capabilities of the mobile station. Otherwise, the base station shall set this field to '1'.

SUBCLASS_REC_LEN - Band subclass subrecord length

If SUBCLASS_INFO_INCL is set to '0', the base station shall omit this field; otherwise, the base station shall set this field as follows:

The base station shall set this field to the number of band subclass indicator fields included in the subrecord minus one. The number of subclass indicator fields included depends on the highest band subclass being queried for mobile support for the associated CAND_BAND_CLASS (i.e. if the highest band subclass being queried is K, then SUBCLASS_REC_LEN = K).

If the SUBCLASS_REC_LEN field is included, the base station shall include SUBCLASS_REC_LEN + 1 occurrences of the following subrecord. The first field included corresponds to band subclass '0' and the Nth field included corresponds to band subclass 'N-1'.

BAND_SUBCLASS_IND - Band subclass indicator

The base station shall set this field to '1' if it requires the mobile to report whether it supports this band subclass for the associated CAND_BAND_CLASS; otherwise, the base station shall set this field to '0'.

The mobile station is to indicate its capability to support the candidate band class and band subclass (if applicable) combination in the *Registration Message*, *Origination Message*, and *Page Response Message*.

RESCAN - Rescan indicator.

If mobile stations are to re-initialize and re-acquire the system upon receiving this message, the base station shall set this field to '1'; otherwise, the base station shall set this field to '0'.

TX_PWR_LIMIT_INCL - Transmit Power Limit inclusion for the current base station

If the transmit power limit field is included in this message, the base station shall set this field to '1'; otherwise, the base station shall set this field to '0'.

TX_PWR_LIMIT - Transmit Power Limit for the current base station

If TX_PWR_LIMIT_INCL is set to '0', the base station shall omit this field; otherwise, the base station shall include this field and set to as follows.

The base station shall set this field to thirty dB more than transmit power limit in dBm EIRP, in steps of 1 dB. This field can take the values 30 to 53 corresponding to maximum transmit power values 0 dBm to 23 dBm.

BYPASS_REG_IND - Indication to bypass the power up registration upon the change of bands, serving systems, and frequency blocks.

The base station shall set this field to '00' if the mobile station is to perform a power up registration upon band, frequency block or serving system change.

The base station shall set this field to '01' if the mobile station is to bypass the power up registration requirement upon band, frequency block or serving system changes due to processing the *Extended CDMA Channel List Message*.

The base station shall set this field to '10' if the mobile station is to bypass the power up registration requirement upon band, frequency block or serving system change when the SID remains the same.

The base station shall set this field to '11' if the mobile station is to bypass the power up registration requirement upon band, frequency block or serving system change.

CRRM_MSG_IND - *Call Recovery Request Message* supported indicator.

The base station shall set this field to '0' if the mobile station is not allowed to send a *Call Recovery Request Message*; otherwise, the base station shall set this field to '1'.

APPIM_PERIOD_INDEX – *Access Point Pilot Information Message* transmission frequency.

If the AP_PILOT_INFO is not included or is included and set to 0, the base station shall omit this field. Otherwise, the base station shall include this field if there are any fields following this field or if the base station needs to set this field to a value other than '000'.

The base station shall set this field to the period index value of *Access Point Pilot Information Message*. The base station shall set this field value in the range '000' – '101', both inclusive.

GEN_OVHD_CYCLE_INDEX – *General Overhead Information Message* transmission frequency.

If the GEN_OVHD_INF_IND is not included or is included and set to 0, the base station shall omit this field. Otherwise, the base station shall include this field if there are any fields following this field or if the base station needs to set this field to a value other than '000'.

The base station shall set this field to the cycle index value of *General Overhead Message*. The base station shall set this field value in the range '000' – '101', both inclusive.

ATIM_CYCLE_INDEX - *Alternative Technologies Information Message* transmission frequency.

If the ATIM_IND is not included or is included and set to 0, the base station shall omit this field. Otherwise, the base station shall include this field if there are any fields following this field or if the base station needs to set this field to a value other than '000'.

The base station shall set this field to the cycle index value of *Alternative Technologies Information Message*. The base station shall set this field vale in the range '000' – '101', both inclusive.

ADD_LOC_INFO_INCL – Location information included.

If CCH_INFO_INCL is set to ‘1’, the base station shall include this field and set it as shown below; otherwise, the base station shall omit this field.

The base station shall set this field to ‘1’ to indicate if the LOC_UNC_H, HEIGHT, and LOC_UNC_V fields are included in this message and to indicate if the BASE_LAT and BASE_LONG contain legitimate values, otherwise, the base station shall set this field to ‘0.

LOC_UNC_H – Horizontal location uncertainty.

If ADD_LOC_INFO_INCL are set to ‘1’, the base station shall include this field and set it as shown below; otherwise, the base station shall omit this field.

The base station shall set this field to the circular horizontal location uncertainty, as specified in Table 3.7.2.3.2.1-2. The value of this field indicates the radius of a circular 95% confidence coverage area.

HEIGHT – Height.

If ADD_LOC_INFO_INCL are set to ‘1’, the base station shall include this field and set it as shown below; otherwise, the base station shall omit this field.

The base station shall this field to the height, above the WGS-84 reference ellipsoid, in units of 1 meter, in the range from -500 m to 15,882 m, where the binary value of the field conveys the height plus 500 m.

The base station shall set this field to all ones if its height is not known.

LOC_UNC_V – Vertical location uncertainty.

If ADD_LOC_INFO_INCL are set to ‘1’, the base station shall include this field and set it as shown below; otherwise, the base station shall omit this field.

The base station set this field to the vertical location uncertainty, as specified in Table 3.7.2.3.2.1-3. The value of this field indicates the one-sigma uncertainty of HEIGHT within the corresponding horizontal coverage area.

The base station shall set this field to all ones if its height is not known.

3.7.2.3.2.32 ANSI-41 RAND Message

MSG_TAG: A41RANDM

Field	Length (bits)
PILOT_PN	9
ACC_MSG_SEQ	6
RAND	32

PILOT_PN - Pilot PN sequence offset index.

The base station shall set this field to the pilot PN sequence offset for this base station, in units of 64 PN chips.

ACC_MSG_SEQ - Enhanced Access Parameters Message sequence number.

The base station shall set this field to ACC_CONFIG_SEQ (see 3.6.2.2).

RAND - Random challenge value.

The base station shall set this field to the random challenge value to be used by mobile stations for authentication.

3.7.2.3.2.33 Enhanced Access Parameters Message

MSG_TAG: EAPM

Field	Length (bits)
PILOT_PN	9
ACC_MSG_SEQ	6
PSIST_PARMS_INCL	1
PSIST_PARMS_LEN	0 or 5
PSIST(0-9)_EACH	0 or 6
PSIST(10)_EACH	0 or 3
PSIST(11)_EACH	0 or 3
PSIST(12)_EACH	0 or 3
PSIST(13)_EACH	0 or 3
PSIST(14)_EACH	0 or 3
PSIST(15)_EACH	0 or 3
PSIST_EMG	0 or 3
MSG_PSIST_EACH	0 or 3
REG_PSIST_EACH	0 or 3
RESERVED	0 – 7 (as needed)
LAC_PARMS_LEN	4
ACC_TMO	6
RESERVED_1	4
MAX_REQ_SEQ	4
MAX_RSP_SEQ	4
RESERVED	0 – 7 (as needed)

(continues on next page)

Field	Length (bits)
NUM_MODE_SELECTION_ENTRIES	3

NUM_MODE_SELECTION_ENTRIES + 1 occurrences of the following record:

{ (NUM_MODE_SELECTION_ENTRIES + 1)

ACCESS_MODE	3
ACCESS_MODE_MIN_DURATION	10
ACCESS_MODE_MAX_DURATION	10

} (NUM_MODE_SELECTION_ENTRIES + 1)

RLGAIN_COMMON_PILOT	6
IC_THRESH	4
IC_MAX	4
NUM_MODE_PARM_REC	3

NUM_MODE_PARM_REC + 1 occurrences of the following record:

{ (NUM_MODE_PARM_REC + 1)

EACH_PARM_REC_LEN	4
APPLICABLE_MODES	8
EACH_NOM_PWR	5
EACH_INIT_PWR	5
EACH_PWR_STEP	3
EACH_NUM_STEP	4
EACH_PREAMBLE_ENABLED	1
EACH_PREAMBLE_NUM_FRAC	0 or 4
EACH_PREAMBLE_FRAC_DURATION	0 or 4
EACH_PREAMBLE_OFF_DURATION	0 or 4
EACH_PREAMBLE_ADD_DURATION	0 or 4
RESERVED	6
EACH_PROBE_BKOFF	4
EACH_BKOFF	4
EACH_SLOT	6
EACH_SLOT_OFFSET1	6

(continues on next page)

Field	Length (bits)
EACH_SLOT_OFFSET2	6
RESERVED	0 – 7 (as needed)

} (NUM_MODE_PARM_REC + 1)

BA_PARMS_LEN	3
NUM_EACH_BA	0 or 5
EACH_BA_RATES_SUPPORTED	0 or 8
RESERVED	0 – 7 (as needed)
RA_PARMS_LEN	5
NUM_EACH_RA	0 or 5
NUM_CACH	0 or 3
CACH_CODE_RATE	0 or 1

(NUM_CACH + 1) occurrences of the following record:

{ (NUM_CACH + 1)

CACH_CODE_CHAN	8

} (NUM_CACH + 1)

NUM_RCCCH	0 or 5
RCCCH_RATES_SUPPORTED	0 or 8
RCCCH_PREAMBLE_ENABLED	0 or 1
RCCCH_PREAMBLE_NUM_FRAC	0 or 4
RCCCH_PREAMBLE-_FRAC_DURATION	0 or 4
RCCCH_PREAMBLE_OFF_DURATION	0 or 4
RCCCH_PREAMBLE_ADD_DURATIO N	0 or 4
RCCCH_SLOT	0 or 6
RCCCH_SLOT_OFFSET1	0 or 6
RCCCH_SLOT_OFFSET2	0 or 6
RCCCH_NOM_PWR	0 or 5
RCCCH_INIT_PWR	0 or 5
RA_PC_DELAY	0 or 5

(continues on next page)

Field	Length (bits)
EACAM_CACH_DELAY	0 or 4
RCCCH_HO_SUPPORTED	0 or 1
RCCCH_HO_THRESH	0 or 4
EACAM_PCCAM_DELAY	0 or 5
NUM_CPCCH	0 or 2
CPCCH_RATE	0 or 2

(NUM_CPCCH + 1) occurrences of the following record:

{ (NUM_CPCCH + 1)

CPCCH_CODE_CHAN	8

} (NUM_CPCCH + 1)

NUM_PCSCH_RA	0 or 7
RESERVED	0 – 7 (as needed)
ACCT_INCL	1
ACCT_INCL_EMG	0 or 1
ACCT_AOC_BITMAP_INCL	0 or 1
ACCT_SO_INCL	0 or 1
NUM_ACCT_SO	0 or 4

NUM_ACCT_SO + 1 occurrences of the following record:

{ (NUM_ACCT_SO + 1)

ACCT_AOC_BITMAP1	0 or 5
ACCT_SO	16

} (NUM_ACCT_SO + 1)

ACCT_SO_GRP_INCL	0 or 1
NUM_ACCT_SO_GRP	0 or 3

NUM_ACCT_SO_GRP + 1 occurrences of the following record:

{ (NUM_ACCT_SO_GRP + 1)

ACCT_AOC_BITMAP2	0 or 5
ACCT_SO_GRP	5

} (NUM_ACCT_SO_GRP + 1)

PILOT_PN - Pilot PN sequence offset index.

The base station shall set this field to the pilot PN sequence offset for this base station, in units of 64 PN chips.

ACC_MSG_SEQ - Enhanced Access Parameters Message sequence number.

The base station shall set this field to ACC_CONFIG_SEQ (see 2.6.2.2.15).

PSIST_PARMS_INCL - Persistence parameters included indicator.

If persistence parameters are included in this message, the base station shall set this field to '1'; otherwise, the base station shall set this field to '0'.

PSIST_PARMS_LEN - Length of persistence parameters record.

If PSIST_PARMS_INCL is set to '0', the base station shall omit this field; otherwise, the base station shall set this field to the total length, in octets, of persistence parameters included in the message, including the PSIST_PARMS_LEN and RESERVED fields.

PSIST(0-9)_EACH - Persistence value for access overload classes 0 through 9.

If PSIST_PARMS_INCL is set to '0', the base station shall omit this field; otherwise, the base station shall set this field as follows:

If a mobile station in access overload classes 0 through 9 is permitted to transmit requests on the Enhanced Access Channel, the base station shall set this field to the persistence value to be used. If such a mobile stations is not permitted to transmit requests on the Enhanced Access Channel, the base station shall set this field to '111111'.

PSIST(10)_EACH - Persistence value for access overload class 10 (test mobile stations).

If PSIST_PARMS_INCL is set to '0', the base station shall omit this field; otherwise, the base station shall set this field as follows:

If a mobile station in access overload class 10 is permitted to transmit requests on the Enhanced Access Channel, the base station shall set this field to the persistence value to be used. If such a mobile station is not permitted to transmit requests on the Enhanced Access Channel, the base station shall set this field to '111'.

PSIST(11)_EACH - Persistence value for access overload class 11 (emergency mobile stations).

If PSIST_PARMS_INCL is set to '0', the base station shall omit this field; otherwise, the base station shall set this field as follows:

If a mobile station in access overload class 11 is permitted to transmit requests on the Enhanced Access Channel, the base station shall set this field to the persistence value to be used. If such a mobile station is not permitted to transmit requests on the Enhanced Access Channel, the base station shall set this field to '111'.

PSIST(12)_EACH - Persistence value for access overload class 12.

If PSIST_PARMS_INCL is set to ‘0’, the base station shall omit this field; otherwise, the base station shall set this field as follows:

If a mobile station in access overload class 12 is permitted to transmit requests on the Enhanced Access Channel, the base station shall set this field to the persistence value to be used. If such a mobile station is not permitted to transmit requests on the Enhanced Access Channel, the base station shall set this field to ‘111’.

PSIST(13)_EACH - Persistence value for access overload class 13.

If PSIST_PARMS_INCL is set to ‘0’, the base station shall omit this field; otherwise, the base station shall set this field as follows:

If a mobile station in access overload class 13 is permitted to transmit requests on the Enhanced Access Channel, the base station shall set this field to the persistence value to be used. If such a mobile station is not permitted to transmit requests on the Enhanced Access Channel, the base station shall set this field to ‘111’.

PSIST(14)_EACH - Persistence value for access overload class 14.

If PSIST_PARMS_INCL is set to ‘0’, the base station shall omit this field; otherwise, the base station shall set this field as follows:

If a mobile station in access overload class 14 is permitted to transmit requests on the Enhanced Access Channel, the base station shall set this field to the persistence value to be used. If such a mobile station is not permitted to transmit requests on the Enhanced Access Channel, the base station shall set this field to ‘111’.

PSIST(15)_EACH - Persistence value for access overload class 15.

If PSIST_PARMS_INCL is set to ‘0’, the base station shall omit this field; otherwise, the base station shall set this field as follows:

If a mobile station in access overload class 15 is permitted to transmit requests on the Enhanced Access Channel, the base station shall set this field to the persistence value to be used. If such a mobile stations is not permitted to transmit requests on the Enhanced Access Channel, the base station shall set this field to ‘111’.

PSIST_EMG - Persistence value for emergency call for access overload classes 0 through 9.

If PSIST_PARMS_INCL is set to ‘0’, the base station shall omit this field; otherwise, the base station shall set this field as follows:

If a mobile station in access overload classes 0 through 9 is permitted to transmit emergency requests on the Enhanced Access Channel, the base station shall set this field to the persistence value to be used for the emergency calls. If such a mobile station is not permitted to transmit emergency requests on the Enhanced Access Channel, the base station shall set this field to '111'.

MSG_PSIST_EACH - Persistence modifier for Enhanced Access Channel attempts for message transmissions.

If PSIST_PARMS_INCL is set to '0', the base station shall omit this field; otherwise, the base station shall set this field to the persistence modifier for Enhanced Access Channel attempts for message transmissions.

REG_PSIST_EACH - Persistence modifier for Enhanced Access Channel attempts for registrations which are not responses to the *Registration Request Order*.

If PSIST_PARMS_INCL is set to '0', the base station shall omit this field; otherwise, the base station shall set this field to the persistence modifier for Enhanced Access Channel attempts for registrations which are not responses to the *Registration Request Order*.

RESERVED - Reserved bits.

If PSIST_PARMS_INCL is set to '0', the base station shall omit this field; otherwise, the base station shall include as many bits as required to make the length of the persistence parameters record an integral number of octets. If this field is included, the base station shall set each of these bits to '0'.

LAC_PARMS_LEN - Length of Link Access Control parameter fields.

The base station shall set this field to the total length, in octets, of Link Access Control parameters included in the message, including the LAC_PARMS_LEN and RESERVED fields.

ACC_TMO - Acknowledgment timeout.

The base station shall set this field to one less than the length of time, in units of 20 ms, that a mobile station is to wait to receive a Layer 2 acknowledgment after the end of an Enhanced Access Channel transmission.

RESERVED_1 - The reserved bits

The base station shall set this field to '0000'

MAX_REQ_SEQ - Maximum number of access probe sequences for an Enhanced Access Channel request.

The base station shall set this field to the maximum number of access probe sequences a mobile station is to transmit for an Enhanced Access Channel request. The base station shall set this field to a value greater than 0.

MAX_RSP_SEQ - Maximum number of access probe sequences for an Enhanced Access Channel response.

The base station shall set this field to the maximum number of access probe sequences a mobile station is to transmit for an Enhanced Access Channel response. The base station shall set this field to a value greater than 0.

RESERVED - Reserved Bits.

The base station shall include as many bits as required to make the length of the Link Access Control parameters record an integral number of octets. The base station shall set each of these bits to '0'.

NUM_MODE_SELECTION_ENTRIES - Number of entries of the Mode Selection Table.

The base station shall set this field to the number of entries of the Mode Selection Table, minus one.

The base station shall include NUM_MODE_SELECTION_ENTRIES + 1 occurrences of the following three-field record:

ACCESS_MODE - Access Mode used for the Enhanced Access Channel.

The base station shall set this field to the Access Mode value shown in Table 3.7.2.3.2.33-1 corresponding to the Access Mode used.

Table 3.7.2.3.2.33-1. Enhanced Access Modes

ACCESS_MODE (binary)	Access Mode
000	Basic Access Mode
001	Reservation Access Mode
010 – 011	Reserved

ACCESS_MODE_MIN_DURATION - The minimum message duration for the corresponding Access Mode.

The base station shall set this field to the minimum message duration for the corresponding Access Mode, in units of 5 ms. See [3].

ACCESS_MODE_MAX_DURATION - The maximum message duration for the corresponding Access Mode.

The base station shall set this field to the maximum message duration for the corresponding Access Mode, in units of 5 ms. See [3].

RLGAIN_COMMON_PILOT - Gain adjustment of the Enhanced Access Channel or Reverse Common Control Channel relative to the Reverse Pilot Channel.

The base station shall set this field to the correction factor to be used by mobile stations in setting the power of a code channel, expressed as a two's complement value in units of 0.125 dB (see [2]).

IC_THRESH - Interference correction threshold.

The threshold level at which the interference correction begins to be applied.

The base station shall set this field to the negative of the interference correction threshold to be used by mobile stations to determine the interference correction, in units of 1 dB (see [2]).

IC_MAX - The maximum interference correction that can be applied.

The base station shall set this field to the maximum interference correction that can be applied, in units of 1 dB (see [2]).

NUM_MODE_PARM_REC - The number of mode-specific parameter records.

The base station shall set this field to the number of mode-specific parameter records included in the message, minus one.

The base station shall include NUM_MODE_PARM_REC + 1 occurrences of the following record:

EACH_PARM_REC_LEN - Length of the mode-specific parameters record.

The base station shall set this field to the total length, in octets, of the mode-specific parameters record, including the EACH_PARM_REC_LEN and RESERVED fields.

APPLICABLE_MODES - Access modes to which the access parameters specified in this record apply.

The base station shall set each subfield of the APPLICABLE_MODES field as follows: the base station shall set the subfield to '1' if the access parameters included in this record are applicable to the corresponding Access Mode in Table 3.7.2.3.2.33-2; otherwise, the base station shall set the subfield to '0'.

Table 3.7.2.3.2.33-2. Applicable Modes

Subfield	Length (bits)	Subfield Description
ACC_MODE_1	1	Basic Access Mode
ACC_MODE_2	1	Reservation Access Mode
RESERVED	6	

EACH_NOM_PWR - Nominal transmit power offset for the Enhanced Access Channels.

The base station shall set this field to the correction factor to be used by a mobile station in the open loop power estimate, expressed as a two's complement value in units of 1 dB (see [2]).

EACH_INIT_PWR - Initial power offset for the Enhanced Access Channels.

The base station shall set this field to the correction factor to be used by a mobile station in the open loop power estimate for the initial transmission on an Enhanced Access Channel, expressed as a two's complement value in units of 1 dB (see [2]).

EACH_PWR_STEP - Power increment for the Enhanced Access Channels.

The base station shall set this field to the value by which a mobile station is to increase their transmit power between successive access probes in an access probe sequence, in units of 1 dB.

EACH_NUM_STEP - Number of access probes.

The base station shall set this field to one less than the maximum number of access probes a mobile station is to transmit in a single access probe sequence.

EACH_PREAMBLE_ENABLED - Preamble enabled indicator for the Enhanced Access Channel.

The base station shall set this field to '1' if EACH preambles related information is included in this message; otherwise, the base station shall set this field to '0'.

EACH_PREAMBLE_NUM_FRAC - The number of fractional preambles on the Enhanced Access Channels.

If EACH_PREAMBLE_ENABLED is set to '1', the base station shall set this field to the number of fractional preambles minus one on the Enhanced Access Channels; otherwise, the base station shall omit this field.

EACH_PREAMBLE_FRAC_DURATION - Fractional preamble duration on the Enhanced Access Channels.

If EACH_PREAMBLE_ENABLED is set to '1', the base station shall set this field to the fractional preamble duration minus one on an Enhanced Access Channel, in units of 1.25 ms; otherwise, the base station shall omit this field.

EACH_PREAMBLE_OFF_DURATION- Fractional preamble gated-off duration on the Enhanced Access Channels.

If EACH_PREAMBLE_ENABLED is set to '1', the base station shall set this field to the fractional preamble gated-off duration (in units of 1.25 ms) after the transmission of each fractional preamble on an Enhanced Access Channel; otherwise, the base station shall omit this field.

EACH_PREAMBLE_ADD_DURATION - Additional preamble duration on the Enhanced Access Channels.

If EACH_PREAMBLE_ENABLED is set to '1', the base station shall set this field to the additional preamble duration on an Enhanced Access Channel, in units of 1.25 ms; otherwise, the base station shall omit this field.

RESERVED - Reserved bits.

The base station shall set this field to '000000'.

EACH_PROBE_BKOFF - Enhanced Access Channel probe backoff range.

The base station shall set this field to one less than the maximum number of slots a mobile station is to delay due to random backoff between consecutive enhanced access probes.

EACH_BKOFF - Enhanced Access Channel probe sequence backoff range.

The base station shall set this field to one less than the maximum number of slots a mobile station is to delay due to random backoff between successive enhanced access probe sequences.

EACH_SLOT - Slot duration for the Enhanced Access Channels.

The base station shall set this field to N where the slot duration of the Enhanced Access Channel is $(N+1) \times 1.25$ ms. The base station shall set this field to a value between 0 and 63.

EACH_SLOT_OFFSET1 - First slot offset for the Enhanced Access Channels.

The base station shall set this field so that the Enhanced Access Channel has a slot offset equal to (EACH_ID × EACH_SLOT_OFFSET2 + EACH_SLOT_OFFSET1) mod (EACH_SLOT+1), where EACH_ID is the Enhanced Access Channel Index. The base station shall set this field to a value between 0 and 63, in units of 1.25 ms.

EACH_SLOT_OFFSET2 - Relative slot offset for the Enhanced Access Channels.

The base station shall set this field so that the Enhanced Access Channel has a slot offset equal to (EACH_ID × EACH_SLOT_OFFSET2 + EACH_SLOT_OFFSET1) mod (EACH_SLOT+1), where EACH_ID is the Enhanced Access Channel Index. The base station shall set this field to a value between 0 and 63, in units of 1.25 ms.

RESERVED - Reserved bits.

The base station shall include as many bits as required to make the length of the mode-specific parameters record an integral number of octets. The base station shall set each of these bits to '0'.

BA_PARMS_LEN - Length of Basic Access Mode parameter record.

The base station shall set this field to the total length, in octets, of Basic Access Mode parameters record included in the message, excluding the BA_PARMS_LEN but including the RESERVED fields. If there are no fields other than the BA_PARMS_LEN in this record, the base station shall set this field to '000'.

NUM_EACH_BA - Number of Enhanced Access Channels used for the Basic Access Mode.

If BA_PARMS_LEN is equal to '000', the base station shall omit this field; otherwise, the base station shall include this field and set it to the number of Enhanced Access Channels used for the Basic Access mode minus one.

EACH_BA_RATES_SUPPORTED - Supported rate words for the Basic Access mode on the Enhanced Access Channels.

If BA_PARMS_LEN is equal to '000', the base station shall omit this field; otherwise, the base station shall include this field and set each subfield of the EACH_BA_RATES_SUPPORTED field as follows: the base station shall set the subfield to '1' if the corresponding mode in Table 3.7.2.3.2.33-3 is allowed; otherwise the base station shall set the subfield to '0'.

Table 3.7.2.3.2.33-3. EACH and RCCCH Data Rate and Frame Size

Subfield	Length (bits)	Subfield Description
RATE_SIZE_1	1	9600 bps, 20 ms frame size
RATE_SIZE_2	1	19200 bps, 20 ms frame size
RATE_SIZE_3	1	19200 bps, 10 ms frame size
RATE_SIZE_4	1	38400 bps, 20 ms frame size
RATE_SIZE_5	1	38400 bps, 10 ms frame size
RATE_SIZE_6	1	38400 bps, 5 ms frame size
RESERVED	2	Reserved

RESERVED - Reserved bits.

If BA_PARMS_LEN is equal to '000', the base station shall omit this field; otherwise, the base station shall include as many bits as required to make the length of the Basic Access Mode record (excluding the BA_PARMS_LEN field but including the RESERVED field) an integral number of octets. The base station shall set each of these bits to '0'.

RA_PARMS_LEN - Length of Reservation Access Mode parameters record.

The base station shall set this field to the total length, in octets, of Reservation Access Mode parameters record included in the message, excluding the RA_PARMS_LEN but including the RESERVED field.

NUM_EACH_RA - Number of Enhanced Access Channels used for the Reservation Access Mode.

If RA_PARMS_LEN is equal to '00000', the base station shall omit this field; otherwise, the base station shall include this field and set it to the number of Enhanced Access Channels used for the Reservation Access mode minus one.

NUM_CACH - Number of Common Assignment Channels.

If RA_PARMS_LEN is equal to '00000', the base station shall omit this field; otherwise, the base station shall include this field and set it to the number of Common Assignment Channels supported by the system minus one.

CACH_CODE_RATE – Code Rate for the Common Assignment Channels.

If RA_PARMS_LEN is equal to '00000', the base station shall omit this field; otherwise, the base station shall include this field and set it as follows:

If the CACH is operating in Spreading Rate 1, the base station shall set this field to '0' if the CACH Code Rate is 1/4 (see [2]). The base station shall set this field to '1' if the CACH Code Rate is 1/2 (see [2]).

If the CACH is operating in Spreading Rate 3, the base station shall set this field to '0'.

If RA_PARMS_LEN is not equal to '00000', the base station shall include (NUM_CACH + 1) occurrences of the following one field record:

CACH_CODE_CHAN - Code channel index for the Common Assignment Channel.

The base station shall set this field to the code channel index (see [2]) in the range 1 to 255 inclusive that the mobile station is to use on the Common Assignment Channel.

NUM_RCCCH - Number of Reverse Common Control Channels used for the Reservation Mode.

If RA_PARMS_LEN is equal to '00000', the base station shall omit this field; otherwise, the base station shall include this field and set it to the number of Reverse Common Control Channels used for the Reservation mode minus one.

RCCCH_RATES_SUPPORTED - Supported rate words on the Reverse Common Control Channels.

If RA_PARMS_LEN is equal to '00000', the base station shall omit this field; otherwise, the base station shall include this field and set each bit of the RCCCH_RATES_SUPPORTED field as follows: the base station shall set the bit to '1' if the corresponding mode in Table 3.7.2.3.2.33-3 is allowed; otherwise the base station shall set the bit to '0'.

RCCCH_PREAMBLE_ENABLED - Preamble enabled indicator for the Reverse Common Control Channel.

If RA_PARMS_LEN is equal to '00000', the base station shall omit this field; otherwise, the base station shall include this field and set it as follows:

If RCCCH preambles related information is included in this message, the base station shall set this field to '1'; otherwise, the base station shall set this field to '0'.

RCCCH_PREAMBLE_NUM_FRAC - Number of fractional preambles on the Reverse Common Control Channels.

If RCCCH_PREAMBLE_ENABLED is included and is set to '1', the base station shall set this field to the number of fractional preambles minus one on the Reverse Common Control Channels; otherwise, the base station shall omit this field.

RCCCH_PREAMBLEFRAC_DURATION - Fractional preamble duration for the Reverse Common Control Channels.

If RCCCH_PREAMBLE_ENABLED is included and is set to '1', the base station shall set this field to the fractional preamble duration minus one on a Reverse Common Control Channel, in units of 1.25 ms; otherwise, the base station shall omit this field.

RCCCH_PREAMBLE_OFF_DURATION - Fractional preamble gated-off duration on Reverse Common Control Channels.

If RCCCH_PREAMBLE_ENABLED is included and is set to '1', the base station shall set this field to the fractional preamble gated-off duration (in units of 1.25 ms) after the transmission of each fractional preamble on a Reverse Common Control Channel; otherwise, the base station shall omit this field.

RCCCH_PREAMBLE_ADD_DURATION - Additional preamble duration on the Reverse Common Control Channels.

If RCCCH_PREAMBLE_ENABLED is included and is set to '1', the base station shall set this field to the additional preamble duration on a Reverse Common Control Channel, in units of 1.25 ms; otherwise, the base station shall omit this field.

RCCCH_SLOT - Slot interval for the Reverse Common Control Channels.

If RA_PARMS_LEN is equal to '00000', the base station shall omit this field; otherwise, the base station shall include this field and set it to N where the slot duration on the Reverse Common Control Channel is (N+1) × 1.25 ms. The base station shall set this field to a value between 0 and 63.

RCCCH_SLOT_OFFSET1 - First slot offset for the Reverse Common Control Channels.

If RA_PARMS_LEN is equal to '00000', the base station shall omit this field; otherwise, the base station shall include this field and set it so that Reverse Common Control Channel has a slot offset equal to (RCCCH_ID × RCCCH_SLOT_OFFSET2 + RCCCH_SLOT_OFFSET1) mod (RCCCH_SLOT+1), where RCCCH_ID is the Reverse Common Control Channel Index. The base station shall set this field to a value between 0 and 63, in units of 1.25 ms.

RCCCH_SLOT_OFFSET2 - Second slot offset for the Reverse Common Control Channels.

If RA_PARMS_LEN is equal to '00000', the base station shall omit this field; otherwise, the base station shall include this field and set it so that Reverse Common Control Channel has a slot offset equal to (RCCCH_ID × RCCCH_SLOT_OFFSET2 + RCCCH_SLOT_OFFSET1) mod (RCCCH_SLOT+1), where RCCCH_ID is the Reverse Common Control Channel Index. The base station shall set this field to a value between 0 and 63, in units of 1.25 ms.

RCCCH_NOM_PWR - Nominal transmit power offset for the Reverse Common Control Channels.

If RA_PARMS_LEN is equal to '00000', the base station shall omit this field; otherwise, the base station shall include this field and set it to the correction factor to be used by a mobile station in the open loop power estimate, expressed as a two's complement value in units of 1 dB (see [2]).

RCCCH_INIT_PWR - Initial power offset for the Reverse Common Control Channels.

If RA_PARMS_LEN is equal to '00000', the base station shall omit this field; otherwise, the base station shall include this field and set it to the correction factor to be used by a mobile station in the open loop power estimate for the initial transmission on a Reverse Common Control Channel, expressed as a two's complement value in units of 1 dB (see [2]).

RA_PC_DELAY - Power control delay for the Reverse Common Control Channel.

If RA_PARMS_LEN is equal to '00000', the base station shall omit this field; otherwise, the base station shall include this field and set it to the number of power control bits the mobile is to disregard after initiating transmission on a Reverse Common Control Channel.

EACAM_CACH_DELAY - Maximum time after an Enhanced Access Channel header transmission for receiving a response on the Common Assignment Channel when Reverse Common Control Channel soft handoff has not been requested.

If RA_PARMS_LEN is equal to '00000', the base station shall omit this field; otherwise, the base station shall include this field and set it to the number of complete Common Assignment Channel frames minus one, from the end of the *R-EACH Header*, for which a mobile station is to wait for the *Early Acknowledgment Channel Assignment Message* if the mobile station has not requested Reverse Common Control Channel soft handoff.

RCCCH_HO_SUPPORTED - Reverse Common Control Channel handoff supported indicator.

If RA_PARMS_LEN is equal to '00000', the base station shall omit this field; otherwise, the base station shall include this field and set it as follows:

The base station shall set this field to '1' if Reverse Common Control Channel handoff is supported by the base station; otherwise, the base station shall set this field to '0'.

RCCCH_HO_THRESH - Reverse Common Control Channel soft handoff threshold.

If RCCCH_HO_SUPPORTED is included and is set to '1', the base station shall include this field; otherwise the base station shall omit this field.

If included, the base station shall set this field to:

$$\lfloor -20 \times \log_{10} \mathit{pilot\_threshold} \rfloor$$

where *pilot_threshold* is the pilot E_c/I_0 threshold used to determine whether the mobile station requests Reverse Common Control Channel in soft handoff.

This is a positive value in units of 0.5 dB.

EACAM_PCCAM_DELAY - Maximum time after an Enhanced Access Channel header transmission for receiving a response on the Common Assignment Channel when Reverse Common Control Channel soft handoff has been requested.

If RCCCH_HO_SUPPORTED is included and is set to '1', the base station shall include this field; otherwise the base station shall omit this field.

If included, the base station shall set this field to the number of complete Common Assignment Channel frames minus one, from the end of the *R-EACH Header*, for which a mobile station is to wait for the *Early Acknowledgment Channel Assignment Message* and *Power Control Channel Assignment Message* if the mobile station has requested Reverse Common Control Channel soft handoff (see [3]).

NUM_CPCCH - Number of Common Power Control Channels.

If RA_PARMS_LEN is equal to '00000', the base station shall omit this field; otherwise, the base station shall include this field and set it to the number of Common Power Control Channels supported minus one.

CPCCH_RATE - Power control rate for the Common Power Control Channels.

If RA_PARMS_LEN is equal to '00000', the base station shall omit this field; otherwise, the base station shall include this field and set it to the value shown in Table 3.7.2.3.2.33-4 corresponding to the power control rate for the Common Power Control Channels.

Table 3.7.2.3.2.33-4. CPCCH Power Control Rate

CPCCH_RATE (Binary)	Power Control Rate
00	200 bps
01	400 bps
10	800 bps
11	Reserved

If RA_PARMS_LEN is not equal to '00000', the base station shall include (NUM_CPCCH + 1) occurrences of the following one field record:

CPCCH_CODE_CHAN - Code channel index for the Common Power Control Channel.

The base station shall set this field to the code channel index (see [2]) in the range 1 to 127 inclusive that the mobile station is to use on the Common Power Control Channel.

NUM_PCSCH_RA - Number of Power Control Subchannels used for the Reservation Access Mode.

If RA_PARMS_LEN is equal to '00000', the base station shall omit this field; otherwise, the base station shall include this field and set it to the number of Power Control Subchannels used for the Reservation Access Mode minus one.

RESERVED - Reserved bits.

If RA_PARMS_LEN is equal to '00000', the base station shall omit this field; otherwise, the base station shall include as many bits as required to make the length of the Reservation Access Mode record (excluding the RA_PARMS_LEN but including the RESERVED field) an integral number of octets. The base station shall set each of these bits to '0'.

ACCT_INCL - Access Control based on Call Type (ACCT) information included indicator.

If the base station enables ACCT for at least one service option, the base station shall set this field to '1'; otherwise, the base station shall set this field to '0'.

If the base station sets this field to '1', then the base station shall also set at least one of ACCT_SO_INCL or ACCT_SO_GRP_INCL to '1'.

ACCT_INCL_EMG - Access Control based on Call Type (ACCT) includes emergency calls indicator.

If ACCT_INCL is set to '0', the base station shall omit this field; otherwise, the base station shall include this field and set it as follows:

The base station shall set this field to '0' if the mobile station is not to apply ACCT to a call that is recognized by the mobile station to be an emergency call; otherwise, the base station shall set this field to '1'.

ACCT_AOC_BITMAP_INCL - Access Control based on Call Type (ACCT) access overload class bitmap included indicator.

If ACCT_INCL is set to '0', the base station shall omit this field; otherwise, the base station shall include this field and set it as follows:

The base station shall set this field to '0' if all mobile stations are to apply ACCT regardless of their access overload classes; otherwise, the base station shall set this field to '1' to indicate that the mobile station is to apply ACCT according to its access overload class.

ACCT_SO_INCL - Access Control based on Call Type (ACCT) service option included indicator.

If ACCT_INCL is set to '0', the base station shall omit this field; otherwise, the base station shall include this field and set it as follows:

The base station shall set this field to '1' if at least one occurrence of the ACCT_SO field is included in this message; otherwise, the base station shall set this field to '0'.

NUM_ACCT_SO - Number of service options for Access Control based on Call Type (ACCT).

If ACCT_SO_INCL is not included, or is included and set to '0', then the base station shall omit this field; otherwise, the base station shall include this field and set it to one less than the number of occurrences of the ACCT_SO field included in this message.

If ACCT_SO_INCL is included and set to '1', then the base station shall include NUM_ACCT_SO + 1 occurrences of the following variable-field record:

ACCT_AOC_BITMAP1 - Access Control based on Call Type (ACCT) access overload class bitmap.

If ACCT_AOC_BITMAP_INCL is set to '0', then the base station shall omit this field; otherwise, the base station shall include this field and set it as follows:

This field consists of the subfields defined in Table 3.7.2.3.2.2-1.

The base station shall set a subfield to ‘1’ to indicate that mobile stations having the corresponding access overload class are not permitted to perform access attempts using the associated service option ACCT_SO; otherwise, the base station shall set the subfield to ‘0’.

ACCT_SO - Access Control based on Call Type (ACCT) service option number.

The base station shall set this field to the value of the service option number (as specified in [30]) that has ACCT enabled.

ACCT_SO_GRP_INCL - Access Control based on Call Type (ACCT) service option group included indicator.

If ACCT_INCL is set to ‘0’, the base station shall omit this field; otherwise, the base station shall include this field and set it as follows:

The base station shall set this field to ‘1’ if at least one occurrence of the ACCT_SO_GRP field is included in this message; otherwise, the base station shall set this field to ‘0’.

NUM_ACCT_SO_GRP - Number of service option groups for Access Control based on Call Type (ACCT).

If ACCT_SO_GRP_INCL is not included, or is included and set to ‘0’, then the base station shall omit this field; otherwise, the base station shall include this field and set it to one less than the number of occurrences of the ACCT_SO_GRP field included in this message.

If ACCT_SO_GRP_INCL is included and set to ‘1’, then the base station shall include NUM_ACCT_SO_GRP + 1 occurrences of the following variable-field record:

ACCT_AOC_BITMAP2 - Access Control based on Call Type (ACCT) access overload class bitmap.

If ACCT_AOC_BITMAP_INCL is set to ‘0’, then the base station shall omit this field; otherwise, the base station shall include this field and set it as follows:

This field consists of the subfields defined in Table 3.7.2.3.2.2-1. The base station shall set a subfield to ‘1’ to indicate that mobile stations having the corresponding access overload class are not permitted to perform access attempts using a service option specified by the associated ACCT_SO_GRP field; otherwise, the base station shall set the subfield to ‘0’.

ACCT_SO_GRP - Access Control based on Call Type (ACCT) service option group number.

The base station shall set this field to the value of the service option group number (as specified in [30]) whose members all have ACCT enabled.

3.7.2.3.2.34 Universal Neighbor List Message

MSG_TAG: UNLM

Field	Length (bits)
PILOT_PN	9
CONFIG_MSG_SEQ	6
NUM_RADIO_INTERFACE	4

NUM_RADIO_INTERFACE occurrences of the following record:

{ (NUM_RADIO_INTERFACE)

RADIO_INTERFACE_TYPE	4
RADIO_INTERFACE_LEN	8
Radio Interface Type-specific fields	8 × RADIO_INTERFACE_LEN

} (NUM_RADIO_INTERFACE)

PILOT_PN - Pilot PN sequence offset index.

The base station shall set this field to the pilot PN sequence offset for this base station, in units of 64 PN chips.

CONFIG_MSG_SEQ - Configuration message sequence number.

The base station shall set this field to CONFIG_SEQ (see 3.6.2.2).

NUM_RADIO_INTERFACE - Number of interface types.

The base station shall set this field to the number of radio interface types for which neighbors are included in this message.

The base station shall include NUM_RADIO_INTERFACE occurrences of the following record, one occurrence for each radio interface for which neighbors are included in this message.

RADIO_INTERFACE_TYPE - The radio interface type.

The base station shall set this field to the radio interface type of this record as specified in Table 3.7.2.3.2.34-1.

Table 3.7.2.3.2.34-1. Radio Interface Type

RADIO_INTERFACE_TYPE (binary)	Descriptions
0000	MC system
0001	Reserved (Previously: Analog system)
0010	HRPD System
0011-1111	Reserved

RADIO_INTERFACE_LEN - The length of the Radio Interface Type-specific fields.

The base station shall set this field to the number of octets in the Radio Interface Type-specific fields of this record.

If RADIO_INTERFACE_TYPE is equal to '0000', the base station shall include the following fields:

Field	Length (bits)
PILOT_INC	4
NGHBR_SRCH_MODE	2
SRCH_WIN_N	0 or 4
SRCH_OFFSET_INCL	1
FREQ_FIELDS_INCL	1
USE_TIMING	1
GLOBAL_TIMING_INCL	0 or 1
GLOBAL_TX_DURATION	0 or 4
GLOBAL_TX_PERIOD	0 or 7
NGHBR_SET_ENTRY_INFO	1
NGHBR_SET_ACCESS_INFO	1
NUM_NGHBR	6

NUM_NGHBR occurrences of the following subrecord:

{ (NUM_NGHBR)

NGHBR_CONFIG	3
NGHBR_PN	9
BCCH_SUPPORT	0 or 1

(continues on next page)

Field	Length (bits)
ADD_PILOT_REC_INCL	1
NGHBR_PILOT_REC_TYPE	0 or 3
RECORD_LEN	0 or 3
Type-specific fields	0 or 8 × RECORD_LEN
SEARCH_PRIORITY	0 or 2
SRCH_WIN_NGHBR	0 or 4
SRCH_OFFSET_NGHBR	0 or 3
FREQ_INCL	0 or 1
NGHBR_BAND	0 or 5
NGHBR_FREQ	0 or 11
TIMING_INCL	0 or 1
NGHBR_TX_OFFSET	0 or 7
NGHBR_TX_DURATION	0 or 4
NGHBR_TX_PERIOD	0 or 7
ACCESS_ENTRY_HO	0 or 1
ACCESS_HO_ALLOWED	0 or 1

} (NUM_NGHBR)

RESQ_ENABLED	1
RESQ_DELAY_TIME	0 or 6
RESQ_ALLOWED_TIME	0 or 6
RESQ_ATTEMPT_TIME	0 or 6
RESQ_CODE_CHAN	0 or 11
RESQ_QOF	0 or 2
RESQ_MIN_PERIOD_INCL	0 or 1
RESQ_MIN_PERIOD	0 or 5
RESQ_NUM_TOT_TRANS_INCL	0 or 1
RESQ_NUM_TOT_TRANS_20MS	0 or 4
RESQ_NUM_TOT_TRANS_5MS	0 or 4
RESQ_NUM_PREAMBLE_RC1_RC2	0 or 3
RESQ_NUM_PREAMBLE	0 or 3

(continues on next page)

1

Field	Length (bits)
RESQ_POWER_DELTA	0 or 3

NUM_NGHBR occurrences of the following one-field record if RESQ_ENABLED is set to '1':

{ (NUM_NGHBR)

NGHBR_RESQ_CONFIGURED	1

} (NUM_NGHBR)

{ (NUM_NGHBR)

NGHBR_PDCH_SUPPORTED	1

} (NUM_NGHBR)

RESERVED	0 – 7 (as needed)

PILOT_INC - Pilot PN sequence offset index increment.

A mobile station searches for Remaining-Set pilots at pilot PN sequence index values that are multiples of this value.

The base station shall set this field to the pilot PN sequence increment, in units of 64 PN chips, that mobile stations are to use for searching the Remaining Set. The base station should set this field to the largest increment such that the pilot PN sequence offsets of all its neighbor base stations are integer multiples of that increment.

The base station shall set this field to a value in the range 1 to 15 inclusive.

NGHBR_SRCH_MODE - Search mode.

The base station shall set this field to the value shown in Table 3.7.2.3.2.34-2 corresponding to the search mode.

Table 3.7.2.3.2.34-2. Search Mode Field

Value (binary)	Description
00	No search priorities or search windows
01	Search priorities
10	Search windows
11	Search windows and search priorities

SRCH_WIN_N - Search window size for the Neighbor Set.

If NGHBR_SRCH_MODE = ‘00’ or NGHBR_SRCH_MODE = ‘01’, the base station shall include the field SRCH_WIN_N and shall set this field as described below; otherwise, the base station shall omit this field.

The base station shall set this field to the value shown in Table 2.6.6.2.1-1 corresponding to the search window size to be used by mobile stations for the Neighbor Set.

SRCH_OFFSET_INCL - Neighbor pilot channel search window offset included.

If NGHBR_SRCH_MODE = ‘10’ or ‘11’ and if the SRCH_OFFSET_NGHBR field is included in the following records, the base station shall set this bit to ‘1’; otherwise, the base station shall set this bit to ‘0’.

FREQ_FIELDS_INCL - Frequency fields included.

If frequency fields are included in this message, the base station shall set this field to ‘1’; otherwise, the base station shall set this field to ‘0’.

USE_TIMING - Use timing indicator.

If base station timing information is included for neighbor base stations, the base station shall set this field to ‘1’; otherwise, the base station shall set this field to ‘0’.

GLOBAL_TIMING_INCL - Global timing included.

If USE_TIMING is set to ‘1’, the base station shall include the field GLOBAL_TIMING_INCL and shall set this field as described below; otherwise, the base station shall omit this field.

If base station timing information is included globally for all neighbor base stations with TIMING_INCL equal to ‘1’, the base station shall set this field to ‘1’; otherwise, the base station shall set this field to ‘0’.

GLOBAL_TX_DURATION - Global neighbor transmit time duration.

If GLOBAL_TIMING_INCL is included and is set to ‘1’, the base station shall include the field GLOBAL_TX_DURATION and shall set this field as described below; otherwise, the base station shall omit this field.

The base station shall set this field to the duration of the base station transmit window, during each period, in units of 80 ms. The base station should set this field to a value of 3 or greater.

GLOBAL_TX_PERIOD - Global neighbor transmit time period.

If GLOBAL_TIMING_INCL is included and is set to ‘1’, the base station shall include the field GLOBAL_TX_PERIOD and shall set this field as described below; otherwise, the base station shall omit this field.

The base station shall set this field to duration of the period, in units of 80 ms.

NGHBR_SET_ENTRY_INFO - Neighbor Set access entry handoff information included indicator.

If the base station is including information on the Neighbor Set access entry handoff, the base station shall set this field to '1'; otherwise, the base station shall set this field to '0'.

NGHBR_SET_ACCESS_INFO - Neighbor Set access handoff included indicator.

If the base station is including information on the Neighbor Set access handoff or access probe handoff, the base station shall set this field to '1', otherwise, the base station shall set this field to '0'.

NUM_NGHBR - Number of neighbor pilot PN sequences.

The base station shall set this field to the number of neighbors included in the message.

The base station shall include one occurrence of the following subrecord for each pilot that a mobile station is to place in its Neighbor Set.

NGHBR_CONFIG - Neighbor configuration.

The base station shall set this field to the value shown in Table 3.7.2.3.2.34-3 corresponding to the configuration of this neighbor.

Table 3.7.2.3.2.34-3. Neighbor Configuration Field

Value (binary)	Neighbor Configuration
000	The neighbor base station has the same number of frequencies having Primary Broadcast Control Channel/Forward Common Control Channels as the current base station. The neighbor base station has a CDMA frequency assignment corresponding to this CDMA frequency assignment with the same number of Forward Common Control Channels, and the neighbor frequency is given as follows: • If FREQ_INCL equals ‘0’ for this record, this corresponding CDMA frequency assignment is the current CDMA frequency assignment. • If FREQ_INCL equals ‘1’ for this record, this corresponding CDMA frequency assignment is given by NGHBR_BAND and NGHBR_FREQ. The position of the neighbor CDMA frequency assignment in the *Extended CDMA Channel List Message* transmitted by the neighbor base station is the same as the position of this current CDMA frequency assignment in the *Extended CDMA Channel List Message* transmitted by the current base station. The rate, code rate, and code channel of the Primary Broadcast Control Channel on this corresponding CDMA frequency are the same values as the current ones. The rate, code rate, and code channel of the corresponding Forward Common Control Channel on this corresponding CDMA frequency are the same values as the current ones. If NGHBR_PILOT_REC_TYPE is included in this message, then neighbor pilot type is as specified in NGHBR_PILOT_REC_TYPE; otherwise, the neighbor pilot is a 1X common pilot.

Value (binary)	Neighbor Configuration
001	The neighbor base station does not have any frequencies with Primary Broadcast Control Channel/Forward Common Control Channel. The neighbor base station has the same number of frequencies having Paging Channels as the current base station has frequencies having Primary Broadcast Control Channel/Forward Common Control Channel. The neighbor base station has a CDMA frequency assignment corresponding to this CDMA frequency assignment but possibly with a different number of Paging Channels, and the neighbor frequency is given as follows: • If FREQ_INCL equals '0' for this record, this corresponding CDMA frequency assignment is the current CDMA frequency assignment. • If FREQ_INCL equals '1' for this record, this corresponding CDMA frequency assignment is given by NGHBR_BAND and NGHBR_FREQ. The position of the neighbor CDMA frequency assignment in the *Extended CDMA Channel List Message* transmitted by the neighbor base station is the same as the position of this current CDMA frequency assignment in the *Extended CDMA Channel List Message* transmitted by the current base station. This corresponding neighbor CDMA frequency assignment does have a Primary Paging Channel, at 9600 bps.

Value (binary)	Neighbor Configuration
010	The neighbor base station may have a different number of frequencies having Primary Broadcast Control Channel/Forward Common Control Channel as the current base station. The neighbor base station has a Primary Broadcast Control Channel on the following frequency: • If FREQ_INCL equals '0' for this record, the neighbor base station has a Primary Broadcast Control Channel on the first CDMA Channel listed in the *Extended CDMA Channel List Message* transmitted by the current base station. • If FREQ_INCL equals '1' for this record, the neighbor base station has a Primary Broadcast Control Channel on the CDMA frequency assignment given by NGHBR_BAND and NGHBR_FREQ. The rate, code rate, and code channel of the Primary Broadcast Control Channel on this corresponding CDMA frequency are the same values as the current ones. If NGHBR_PILOT_REC_TYPE is included in this message, then neighbor pilot type is as specified in NGHBR_PILOT_REC_TYPE; otherwise, the neighbor pilot is a 1X common pilot.
011	The neighbor base station configuration is unknown but the neighbor base station has a Pilot Channel on the following frequency: • If FREQ_INCL equals '0' for this record, the neighbor CDMA frequency assignment is the same as the current CDMA frequency assignment and has a Pilot Channel. • If FREQ_INCL equals '1' for this record, the CDMA frequency assignment given by NGHBR_BAND and NGHBR_FREQ has a Pilot Channel.

Value (binary)	Neighbor Configuration
100	The neighbor base station has the same number of frequencies having Primary Broadcast Control Channel/Forward Common Control Channel as the current base station. The neighbor base station has a CDMA frequency assignment corresponding to this CDMA frequency assignment with a Primary Broadcast Control Channel, and the neighbor CDMA frequency is given as follows: • If FREQ_INCL equals '0' for this record, this corresponding CDMA frequency assignment is the current CDMA frequency assignment. • If FREQ_INCL equals '1' for this record, this corresponding CDMA frequency assignment is given by NGHBR_BAND and NGHBR_FREQ. The position of the neighbor CDMA frequency assignment in the *Extended CDMA Channel List Message* transmitted by the neighbor base station is the same as the position of this current CDMA frequency assignment in the *Extended CDMA Channel List Message* transmitted by the current base station. The rate, code rate, and code channel of the Primary Broadcast Control Channel on this corresponding CDMA frequency are the same values as the current ones. If NGHBR_PILOT_REC_TYPE is included in this message, then neighbor pilot type is as specified in NGHBR_PILOT_REC_TYPE; otherwise, the neighbor pilot is a 1X common pilot.
101-111	Reserved.

NGHBR_PN - Neighbor pilot PN sequence offset index.

The base station shall set this field to the pilot PN sequence offset for this neighbor, in units of 64 PN chips.

BCCH_SUPPORT - BCCH support indicator.

If the NGHBR_CONFIG field is not set to '011', the base station shall omit this field; otherwise, the base station shall include this field and set it as follows:

If this neighbor base station supports Broadcast Control Channel, the base station shall set this field to '1'; otherwise, the base station shall set this field to '0'.

ADD_PILOT_REC_INCL - Additional pilot information included indicator.

The base station shall set this field to '1' if additional pilot information listed in the NGHBR_PILOT_REC_TYPE and RECORD_LEN fields are included. The base station shall set this field to '0' if the corresponding pilot is the common pilot and there is no additional pilot information included.

NGHBR_PILOT_REC_TYPE - Neighbor Pilot record type

If ADD_PILOT_REC_INCL is set to '1', the base station shall set this field to the NGHBR_PILOT_REC_TYPE value shown in Table 3.7.2.3.2.34-4 corresponding to the type of Pilot Record specified by this record.

Table 3.7.2.3.2.34-4. Neighbor Pilot Record Types

Description	**NGHBR_PILOT_REC_TYPE (binary)**
1X Common Pilot with Transmit Diversity	000
1X Auxiliary Pilot	001
1X Auxiliary Pilot with Transmit Diversity	010
3X Common Pilot	011
3X Auxiliary Pilot	100
All other NGHBR_PILOT_REC_TYPE values are reserved	

If ADD_PILOT_REC_INCL is set to '0', the base station shall omit this field.

RECORD_LEN - Pilot record length.

If ADD_PILOT_REC_INCL is set to '1', the base station shall set this field to the number of octets in the type-specific fields of this pilot record.

If ADD_PILOT_REC_INCL is set to '0', the base station shall omit this field.

Type-specific fields - Pilot record type-specific fields.

If ADD_PILOT_REC_INCL is set to '1', the base station shall include type-specific fields based on the NGHBR_PILOT_REC_TYPE of this pilot record.

If ADD_PILOT_REC_INCL is set to '0', the base station shall omit this field.

If NGHBR_PILOT_REC_TYPE is equal to '000', the base station shall include the following fields:

Field	Length (bits)
TD_POWER_LEVEL	2
TD_MODE	2
RESERVED	4

TD_POWER_LEVEL - TD Transmit Power Level.

The base station shall set this field to the TD transmit power level relative to that of the Forward Pilot Channel as specified in Table 3.7.2.3.2.26-4.

TD_MODE - Transmit Diversity mode.

The base station shall set this field to the Transmit Diversity mode, as specified in Table 3.7.2.3.2.26-3.

RESERVED - Reserved bits.

The base station shall set this field to '0000'.

If NGHBR_PILOT_REC_TYPE is equal to '001', the base station shall include the following fields:

Field	Length (bits)
QOF	2
WALSH_LENGTH	3
AUX_PILOT_WALSH	WALSH_LENGTH+6
RESERVED	0 to 7 (as needed)

QOF - Quasi-orthogonal function index.

The base station shall set this field to the index of the Quasi-orthogonal function (see [2]).

WALSH_LENGTH - Length of the Walsh Code.

The base station shall set this field to the WALSH_LENGTH value shown in Table 3.7.2.3.2.22–6 corresponding to the length of the Walsh code for the pilot that is used in as the Auxiliary pilot.

AUX_PILOT_WALSH - Walsh Code for the Auxiliary Pilot.

The base station shall set this field to the Walsh code corresponding to the Auxiliary pilot.

RESERVED - Reserved bits.

The base station shall set all the bits of this field to '0' to make the entire record octet-aligned.

If NGHBR_PILOT_REC_TYPE is equal to '010', the base station shall include the following fields:

Field	Length (bits)
QOF	2
WALSH_LENGTH	3
AUX_WALSH	WALSH_LENGTH+6
AUX_TD_POWER_LEVEL	2
TD_MODE	2
RESERVED	0 to 7 (as needed)

QOF - Quasi-orthogonal function index for the Auxiliary Transmit Diversity Pilot.

The base station shall set this field to the index of the Quasi-orthogonal function (see [2]).

WALSH_LENGTH - Length of the Walsh Code.

The base station shall set this field to the WALSH_LENGTH value shown in 3.7.2.3.2.22-6 corresponding to the length of the Walsh code for the pilots that are used as Auxiliary pilot in the transmit diversity mode.

AUX_WALSH - Walsh Code for the Auxiliary Pilot.

The base station shall set this field to the Walsh code corresponding to the Auxiliary Pilot.

AUX_TD_POWER_LEVEL - Auxiliary Transmit Diversity Pilot Power Level.

The base station shall set this field to the Auxiliary Transmit Diversity Pilot transmit power level relative to that of the Auxiliary Pilot as specified in Table 3.7.2.3.2.22-7.

TD_MODE - Transmit Diversity mode.

The base station shall set this field to the Transmit Diversity mode, as specified in Table 3.7.2.3.2.26-3.

RESERVED - Reserved bits.

The base station shall set all the bits of this field to '0' to make the entire record octet-aligned.

If NGHBR_PILOT_REC_TYPE is equal to '011', the base station shall include the following fields:

Field	Length (bits)
SR3_PRIMARY_PILOT	2
SR3_PILOT_POWER1	3
SR3_PILOT_POWER2	3

SR3_PRIMARY_PILOT – Primary SR3 pilot.

The base station shall set this field to the value shown in Table 3.7.2.3.2.26-5 corresponding to the position of the primary SR3 pilot.

SR3_PILOT_POWER1 – The primary SR3 pilot power level relative to that of the pilot on the lower frequency of the two remaining SR3 frequencies.

The base station shall set this field to the value shown in Table 3.7.2.3.2.26-6 corresponding to the power level of the primary pilot with respect to the pilot on the lower frequency of the two remaining SR3 frequencies.

SR3_PILOT_POWER2 – The primary SR3 pilot power level relative to that of the pilot on the higher frequency of the two remaining SR3 frequencies.

The base station shall set this field to the value shown in Table 3.7.2.3.2.26-6 corresponding to the power level of the primary pilot with respect to the pilot on the higher frequency of the two remaining SR3 frequencies.

If NGHBR_PILOT_REC_TYPE is equal to ‘100’, the base station shall include the following fields:

Field	Length (bits)
SR3_PRIMARY_PILOT	2
SR3_PILOT_POWER1	3
SR3_PILOT_POWER2	3
QOF	2
WALSH_LENGTH	3
AUX_PILOT_WALSH	WALSH_LENGTH+6
ADD_INFO_INCL1	1
QOF1	0 or 2
WALSH_LENGTH1	0 or 3
AUX_PILOT_WALSH1	0 or WALSH_LENGTH1+6
ADD_INFO_INCL2	1
QOF2	0 or 2
WALSH_LENGTH2	0 or 3
AUX_PILOT_WALSH2	0 or WALSH_LENGTH2+6
RESERVED	0 – 7 (as needed)

SR3_PRIMARY_PILOT – Primary SR3 pilot.

The base station shall set this field to the value shown in Table 3.7.2.3.2.26-5 corresponding to the position of the primary SR3 pilot.

SR3_PILOT_POWER1 – The primary SR3 pilot power level relative to that of the pilot on the lower frequency of the two remaining SR3 frequencies.

The base station shall set this field to the value shown in Table 3.7.2.3.2.26-6 corresponding to the power level of the primary pilot with respect to the pilot on the lower frequency of the two remaining SR3 frequencies.

SR3_PILOT_POWER2 – The primary SR3 pilot power level relative to that of the pilot on the higher frequency of the two remaining SR3 frequencies.

The base station shall set this field to the value shown in Table 3.7.2.3.2.26-6 corresponding to the power level of the primary pilot with respect to the pilot on the higher frequency of the two remaining SR3 frequencies.

QOF - Quasi-orthogonal function index.

The base station shall set this field to the index of the Quasi-orthogonal function (see [2]) on the frequency of the primary pilot.

WALSH_LENGTH - Length of the Walsh Code.

The base station shall set this field to the WALSH_LENGTH value shown in Table 3.7.2.3.2.22–6 corresponding to the length of the Walsh code for the pilot that is used as the Auxiliary pilot on the frequency of the primary pilot.

AUX_PILOT_WALSH - Walsh Code for the Auxiliary Pilot.

The base station shall set this field to the Walsh code corresponding to the Auxiliary pilot on the frequency of the primary pilot.

ADD_INFO_INCL1 - Additional information included for the pilot on the lower frequency of the two remaining SR3 frequencies.

If the additional information for the pilot on the lower frequencies of the two remaining SR3 frequencies is the same as pilot on the primary frequency, the base station shall set this field to ‘0’; otherwise, the base station shall set this field to ‘1’.

QOF1 - Quasi-orthogonal function index for the pilot on the lower frequency of the two remaining SR3 frequencies.

If ADD_INFO_INCL1 is set to ‘0’, the base station shall omit this field; otherwise, the base station shall set this field as follows:

The base station shall set this field to the index of the Quasi-orthogonal function (see [2]) on the lower frequency of the two remaining SR3 frequencies.

WALSH_LENGTH1 - Length of the Walsh Code for the pilot on the lower frequency of the two remaining SR3 frequencies.

If ADD_INFO_INCL1 is set to ‘0’, the base station shall omit this field; otherwise, the base station shall set this field as follows:

The base station shall set this field to the WALSH_LENGTH value shown in Table 3.7.2.3.2.22–6 corresponding to the length of the Walsh code for the pilot that is used as the Auxiliary pilot on the lower frequency of the two remaining SR3 frequencies.

AUX_PILOT_WALSH1 - Walsh Code for the Auxiliary Pilot on the lower frequency of the two remaining SR3 frequencies.

If ADD_INFO_INCL1 is set to ‘0’, the base station shall omit this field; otherwise, the base station shall set this field as follows:

The base station shall set this field to the Walsh code corresponding to the Auxiliary pilot on the lower frequency of the two remaining SR3 frequencies.

ADD_INFO_INCL2 - Additional information included for the pilot on the higher frequency of the two remaining SR3 frequencies.

If the additional information for the pilot on the higher frequencies of the two remaining SR3 frequencies is the same as pilot on the primary frequency, the base station shall set this field to ‘0’; otherwise, the base station shall set this field to ‘1’.

QOF2 - Quasi-orthogonal function index for the pilot on the higher frequency of the two remaining SR3 frequencies.

If ADD_INFO_INCL2 is set to ‘0’, the base station shall omit this field; otherwise, the base station shall set this field as follows:

The base station shall set this field to the index of the Quasi-orthogonal function (see [2]) on the higher frequency of the two remaining SR3 frequencies.

WALSH_LENGTH2 - Length of the Walsh Code for the pilot on the higher frequency of the two remaining SR3 frequencies.

If ADD_INFO_INCL2 is set to ‘0’, the base station shall omit this field; otherwise, the base station shall set this field as follows:

The base station shall set this field to the WALSH_LENGTH value shown in Table 3.7.2.3.2.22–6 corresponding to the length of the Walsh code for the pilot that is used as the Auxiliary pilot on the higher frequency of the two remaining SR3 frequencies.

AUX_PILOT_WALSH2 - Walsh Code for the Auxiliary Pilot on the higher frequency of the two remaining SR3 frequencies.

If ADD_INFO_INCL2 is set to ‘0’, the base station shall omit this field; otherwise, the base station shall set this field as follows:

The base station shall set this field to the Walsh code corresponding to the Auxiliary pilot on the higher frequency of the two remaining SR3 frequencies.

RESERVED - Reserved bits.

The base station shall set all the bits of this field to ‘0’ to make the entire record octet-aligned.

SEARCH_PRIORITY - Pilot Channel search priority.

If NGHBR_SRCH_MODE = ‘01’ or NGHBR_SRCH_MODE = ‘11’, the base station shall include the field SEARCH_PRIORITY and shall set this field as described below; otherwise, the base station shall omit this field.

The base station shall set this field to the search priority for the Pilot Channel corresponding to NGHBR_PN. The base station shall set the search priority as shown in Table 3.7.2.3.2.34-5.

Table 3.7.2.3.2.34-5. Search Priority Field

Value (binary)	Search Priority
00	Low
01	Medium
10	High
11	Very High

SRCH_WIN_NGHBR - Neighbor pilot channel search window size.

If NGHBR_SRCH_MODE = '10' or NGHBR_SRCH_MODE = '11', the base station shall include the field SRCH_WIN_NGHBR and shall set this field as described below; otherwise, the base station shall omit this field.

The base station shall set this field to the value shown in Table 2.6.6.2.1-1 corresponding to the search window size to be used by mobile stations for this neighbor.

SRCH_OFFSET_NGHBR - Neighbor pilot channel search window size offset.

If SRCH_OFFSET_INCL equals to '1', then the base station shall include the field SRCH_OFFSET_NGHBR and shall set this field as described below; otherwise, the base station shall omit this field.

The base station shall set this field to the value shown in Table 2.6.6.2.1-2 corresponding to the search window offset to be used by mobile stations for this neighbor.

FREQ_INCL - Frequency included indicator.

If FREQ_FIELDS_INCL is set to '1', the base station shall include the field FREQ_INCL and shall set this field as described below; otherwise, the base station shall omit this field.

If the NGHBR_BAND and NGHBR_FREQ fields are included for this neighbor base station, the base station shall set this bit to '1'. If the NGHBR_BAND and NGHBR_FREQ fields are not included in this assignment record, the base station shall set this bit to '0'.

NGHBR_BAND - Neighbor band class.

If the FREQ_INCL field is included and is set to '1', the base station shall include the field NGHBR_BAND and shall set this field as described below; otherwise, the base station shall omit this field.

The base station shall set this field to the CDMA band class, as specified in [30], corresponding to the CDMA frequency assignment for the CDMA Channel containing the Broadcast Control Channel/Forward Common Control Channel the mobile station is to search.

NGHBR_FREQ - Neighbor frequency assignment.

If the FREQ_INCL field is omitted or is set to '0', the base station shall omit this field.

If the FREQ_INCL field is included and is set to '1' and the corresponding neighbor has a 1X neighbor pilot record type, the base station shall set this field to the CDMA Channel number, in the specified CDMA band class, corresponding to the CDMA frequency assignment for the CDMA Channel containing the Broadcast Control Channel/Forward Common Control Channel the mobile station is to search.

If the FREQ_INCL field is included and is set to '1' and the corresponding neighbor has a 3X neighbor pilot record type, the base station shall set this field to the CDMA Channel number, in the specified CDMA band class, corresponding to the center SR3 frequency assignment containing the Broadcast Control Channel/Forward Common Control Channel the mobile station is to search.

TIMING_INCL - Timing included indicator.

If USE_TIMING is set to '1', the base station shall include the field TIMING_INCL and set this field as described below; otherwise, the base station shall omit this field.

If base station timing information is included for this neighbor base station, the base station shall set this field to '1'; otherwise, the base station shall set this field to '0'.

NGHBR_TX_OFFSET - Neighbor transmit time offset.

If TIMING_INCL is included and is set to '1', the base station shall include the field NGHBR_TX_OFFSET and shall set this field as described below; otherwise, the base station shall omit this field.

The base station shall set this field to the time offset, in units of 80 ms, from the beginning of the neighbor timing period to the beginning of the first base station transmit window within the period. The beginning of the neighbor timing period occurs when $\lfloor t/4 \rfloor \bmod (16384) = 0$.

NGHBR_TX_DURATION - Neighbor transmit time duration.

If TIMING_INCL is included and is set to '1' and GLOBAL_TIMING_INCL is set to '0', the base station shall include the field NGHBR_TX_DURATION and shall set this field as described below; otherwise, the base station shall omit this field.

The base station shall set this field to duration of the base station transmit window, during each period, in units of 80 ms. The base station should set this field to a value of 3 or greater.

NGHBR_TX_PERIOD - Neighbor transmit time period.

If TIMING_INCL is included and is set to '1' and GLOBAL_TIMING_INCL is set to '0', the base station shall include the field NGHBR_TX_PERIOD and shall set this field as described below; otherwise, the base station shall omit this field.

The base station shall set this field to duration of the period, in units of 80 ms.

ACCESS_ENTRY_HO - Access entry handoff permitted when entering the System Access State.

If NGHBR_SET_ENTRY_INFO is equal to '1', the base station shall include the field ACCESS_ENTRY_HO and shall set this field as described below; otherwise, the base station shall omit this field.

The base station shall set this field to '1' if the mobile station is permitted to perform an access entry handoff to the base station associated with the corresponding pilot between the time it receives a message on the Paging Channel when in the *Mobile Station Idle State* and it enters the *System Access State* to respond to the message; otherwise, the base station shall set this field to '0'.

ACCESS_HO_ALLOWED - Access handoff and access probe handoff permitted for the corresponding pilot while in the *System Access State*.

If NGHBR_SET_ACCESS_INFO is equal to '1', the base station shall include the field ACCESS_HO_ALLOWED and shall set this field as described below; otherwise, the base station shall omit this field.

The base station shall set this field to '1' if the mobile station is permitted to perform an access handoff or access probe handoff to the base station associated with the corresponding pilot when the mobile station is in the *System Access State* (see 2.6.3.1.8 and 2.6.3.1.9); otherwise, the base station shall set this field to '0'.

The base station shall set this field to '0' if this pilot does not support a Reverse Enhanced Access Channel (R-EACH).

RESQ_ENABLED – Call rescue feature enabled indicator.

The base station shall set this field to '1' if the call rescue feature is enabled and there is at least one occurrence of NGHBR_RESQ_CONFIGURED set to '1' in this message; otherwise, the base station shall set this field to '0'.

RESQ_DELAY_TIME – Call rescue delay timer value.

If RESQ_ENABLED is set to '0', the base station shall omit this field; otherwise, the base station shall include this field and set it as follows:

The base station shall set this field to the value of the call rescue delay timer to be used by the mobile station, in units of 80 ms.

RESQ_ALLOWED_TIME – Call rescue allowed timer value.

If RESQ_ENABLED is set to '0', the base station shall omit this field; otherwise, the base station shall include this field and set it as follows:

The base station shall set this field to the value of the call rescue allowed timer to be used by the mobile station, in units of 80 ms.

RESQ_ATTEMPT_TIME – Call rescue attempt timer value.

If RESQ_ENABLED is set to '0', the base station shall omit this field; otherwise, the base station shall include this field and set it as follows:

The base station shall set this field to the value of the call rescue attempt timer to be used by the mobile station, in units of 40 ms.

RESQ_CODE_CHAN – Code channel index for the Rescue Channel.

If RESQ_ENABLED is set to '0', the base station shall omit this field; otherwise, the base station shall include this field and set it as follows:

The base station shall set this field to the code channel index (see [2]) that the mobile station is to use on the Forward Fundamental Channel when attempting Call Rescue Soft Handoff with the associated neighbor pilot.

If Radio Configuration 1, 2, 3, or 5 (see [2]) is used, the base station shall set this field in the range 1 to 63 inclusive. If Radio Configuration 4, 6, 8, 11, or 12 is used, the base station shall set this field in the range 1 to 127 inclusive. If Radio Configuration 7 or 9 is used, the base station shall set this field in the range 1 to 255 inclusive.

RESQ_QOF – Quasi-Orthogonal Function mask identifier for the Rescue Channel.

If RESQ_ENABLED is set to '0', the base station shall omit this field; otherwise, the base station shall include this field and set it as follows:

The base station shall set this field to the quasi-orthogonal function mask identifier (see [2]) that the mobile station is to use on the Forward Fundamental Channel when attempting Call Rescue Soft Handoff with the associated neighbor pilot.

RESQ_MIN_PERIOD_INCL – Minimum time between consecutive rescues included indicator.

If RESQ_ENABLED is set to ‘0’, the base station shall omit this field; otherwise, the base station shall include this field and set it as follows:

The base station shall set this field to ‘1’ if the RESQ_MIN_PERIOD field is included in this message; otherwise, the base station shall set this field to ‘0’.

This field is set to ‘0’ if there is no minimum time restriction between consecutive rescues.

RESQ_MIN_PERIOD – Minimum time between consecutive rescues.

If RESQ_MIN_PERIOD_INCL is not included, or is included and set to ‘0’, the base station shall omit this field; otherwise, the base station shall include this field and set it as follows:

The base station shall set this field to one less than the minimum time after a successful call rescue (i.e. receipt of N_{3m} good frames by the mobile station after the rescue attempt timer is enabled) before any subsequent call rescue attempts can be initiated, in units of 2 seconds.

RESQ_NUM_TOT_TRANS_INCL – The required number of transmissions before declaring L2 Acknowledgment Failure when Call Rescue is enabled included indicator.

If RESQ_ENABLED is set to ‘0’, the base station shall omit this field; otherwise, the base station shall include this field and set it as follows:

If the required number of transmissions of a regular PDU and mini PDU before declaring L2 Acknowledgment Failure when Call Rescue is enabled is included in this message, the base station shall set this field to ‘1’; otherwise, the base station shall set this field to ‘0’.

RESQ_NUM_TOT_TRANS_20MS – The required number of transmissions of a regular PDU before declaring L2 Acknowledgment Failure when Call Rescue is enabled.

If RESQ_NUM_TOT_TRANS_INCL field is not included or is included and is set to ‘0’, the base station shall omit this field; otherwise, the base station shall include this field and set it as follows:

The base station shall set this field to the required number of transmissions of a regular PDU before declaring L2 Acknowledgment Failure when Call Rescue is enabled.

The base station shall not set this field to a value greater than N_{1m}.

RESQ_NUM_TOT_TRANS_5MS – The required number of transmissions of a mini PDU before declaring L2 Acknowledgment Failure when Call Rescue is enabled.

If RESQ_NUM_TOT_TRANS_INCL field is not included or is included and is set to '0', the base station shall omit this field; otherwise, the base station shall include this field and set it as follows:

The base station shall set this field to the required number of transmissions of a mini PDU before declaring L2 Acknowledgment Failure when Call Rescue is enabled.

The base station shall not set this field to a value greater than N_{15m}.

RESQ_NUM_PREAMBLE_RC1_RC2 – The Traffic Channel preamble length for Call Rescue Soft Handoff when operating in Radio Configuration 1 or 2.

If RESQ_ENABLED is set to '0', the base station shall omit this field; otherwise, the base station shall include this field and set it to the length of Traffic Channel preamble, in 20 ms units, that the mobile station is to send when performing a call rescue soft handoff.

RESQ_NUM_PREAMBLE – The Traffic Channel preamble Length for Call Rescue Soft Handoff when operating in Radio Configuration greater than 2.

If RESQ_ENABLED is set to '0', the base station shall omit this field; otherwise, the base station shall include this field and set it to the length of Traffic Channel preamble that the mobile station is to send when performing a call rescue soft handoff, as follows:

The base station shall set this field to the value shown in Table 3.7.3.3.2.17-1 corresponding to the Traffic Channel preamble length in 1.25 ms units.

RESQ_POWER_DELTA – The power level adjustment to be applied to the last closed-loop power level when re-enabling the transmitter for call rescue soft handoff.

If RESQ_ENABLED is set to '0', the base station shall omit this field; otherwise, the base station shall set this field to a value by which mobile stations are to adjust the last closed-loop power level when re-enabling the transmitter for call rescue, expressed as a two's complement value in units of 1 dB.

The base station shall include NUM_NGHBR occurrences of the following one-field record if RESQ_ENABLED is set to '1'. The base station shall use the same order for the following field as is used for the NGHBR_PN fields listed in this message.

NGHBR_RESQ_CONFIGURED – Neighbor Rescue Channel configured indicator.

The base station shall set this field to '1' if a Rescue Channel is configured for this neighbor pilot; otherwise, the base station shall set this field to '0'.

The base station shall include NUM_NGHBR occurrences of the following variable length record. The base station shall use the same order for the following field as is used for the NGHBR_PN fields listed in this message.

NGHBR_PDCH_SUPPORTED– Neighbor PDCH supported indicator.

The base station shall set this field to '1' if PDCH is configured for this neighbor pilot; otherwise, the base station shall set this field to '0'.

RESERVED - Reserved bits.

The base station shall add reserved bits as needed in order to make the length of the entire RADIO_INTERFACE_TYPE record equal to an integer number of octets. The base station shall set these bits to '0'.

If RADIO_INTERFACE_TYPE is equal to '0010', the base station shall include the following fields:

Field	**Length (bits)**
NUM_HRPD_NGHBR	6

NUM_HRPD_NGHBR occurrences of the following subrecord:

{ (NUM_HRPD_NGHBR)

HRPD_NGHBR_REC_LEN	8
NGHBR_PN	9
NGHBR_FREQ_INCL	1
NGHBR_BAND	0 or 5
NGHBR_FREQ	0 or 11
PN_ASSOCIATION_IND	1
DATA_ASSOCIATION_IND	1
HRPD_NGHBR_REC_RESERVED	0-7 (as needed)

} (NUM_HRPD_NGHBR)

NUM_HRPD_NGHBR - Number of neighbor pilot PN sequences.

The base station shall set this field to the number of HRPD neighbors included in the message.

The base station shall include one occurrence of the following subrecord for each pilot that a mobile station is to place in its HRPD Neighbor Set.

HRPD_NGHBR_REC_LEN - HRPD neighbor record length

The base station shall set this field to one less than the number of octets included in this HRPD neighbor record including this field.

NGHBR_PN - Neighbor pilot PN sequence offset index.

The base station shall set this field to the pilot PN sequence offset for this neighbor, in units of 64 PN chips.

NGHBR_FREQ_INCL - Neighbor frequency information included indicator.

The base station shall set this field to '1' if the neighbor frequency information is included in this message; otherwise, the base station shall set this field to '0'.

NGHBR_BAND - Neighbor band class.

If the NGHBR_FREQ_INCL field is set to '0', the base station shall omit this field; otherwise, the base station shall include this field and set it as follows:

The base station shall set this field to the CDMA band class, as specified in [30], corresponding to the CDMA frequency assignment for the CDMA Channel containing this neighbor.

NGHBR_FREQ - Neighbor frequency assignment.

If the NGHBR_FREQ_INCL field is set to '0', the base station shall omit this field; otherwise, the base station shall include this field and set it as follows:

The base station shall set this field to the CDMA Channel number, in the specified CDMA band class, corresponding to the CDMA frequency assignment for this neighbor.

PN_ASSOCIATION_IND - Neighbor PN association indicator.

The base station shall set this field to '1' if the system identified by this system record has the same PN assignment as the 1x system to which this BS belongs; otherwise, the base station shall set this field to '0'.

DATA_ASSOCIATION_IND - Neighbor data association indicator.

The base station shall set this field to '1' if the system identified by this system record can reach the same set of PDSNs as the 1x system to which this BS belongs; otherwise, the base station shall set this field to '0'.

HRPD_NGHBR_REC_RESERVED - HRPD neighbor record reserved bits.

The base station shall add reserved bits as needed in order to make the length of this record equal to an integer number of octets. The base station shall set these bits to '0'.

3.7.2.3.2.35 Security Mode Command Message

MSG_TAG: SMCM

Field	Length (bits)
C_SIG_ENCRYPT_MODE	3
ENC_KEY_SIZE	0 or 3
MSG_INT_INFO_INCL	1
CHANGE_KEYS	0 or 1
USE_UAK	0 or 1

C_SIG_ENCRYPT_MODE - Common channel encryption mode indicator.

The base station shall set this field to the common channel signaling encryption mode, as shown in Table 3.7.4.5-1.

ENC_KEY_SIZE - Key size used for user information and signaling encryption

If C_SIG_ENCRYPT_MODE is equal to ‘001’, or ‘010’, the base station shall include this field and set this field to the encryption key_size as shown in Table 3.7.4.5-2; otherwise, the base station shall omit this field.

MSG_INT_INFO_INCL – Message integrity information included indicator

The base station shall set this field to ‘1’ if the base station supports message integrity; otherwise, the base station shall set this field to ‘0’.

CHANGE_KEYS – Change keys indicator

If MSG_INT_INFO_INCL is set to ‘0’, the base station shall omit this field; otherwise, the base station shall include this field and set it as follows:

The base station shall set this field to ‘0’ to command the mobile station not to update the encryption key and integrity key. The base station shall set this field to ‘1’ to command the mobile station to update the encryption key and integrity key to the latest being generated.

USE_UAK – Use UAK indicator

If MSG_INT_INFO_INCL is set to ‘0’, the base station shall omit this field; otherwise, the base station shall include this field and set it as follows:

If the base station receives an authentication vector with a UAK, the base station shall set this field to ‘1’ to indicate that the mobile station is to use UMAC; otherwise, the base station shall set this field to ‘0’ to indicate that the mobile station is to use MAC-I.

3.7.2.3.2.36 Universal Page Message

MSG_TAG: UPM

When Layer 3 at the base station sends a PDU corresponding to the *Universal Page Message* to Layer 2, it also sends the UPM Common fields to Layer 2. These UPM Common fields and PDUs are used by Layer 2 to assemble the Layer 2 PDU or PDUs corresponding to the *Universal Page Message* (see [4]).

UPM Common Fields:

Field	**Length (bits)**
CONFIG_MSG_SEQ	6
ACC_MSG_SEQ	6
READ_NEXT_SLOT	1
READ_NEXT_SLOT_BCAST	1

PDU Format for a mobile station-addressed page:

Field	**Length (bits)**
SERVICE_OPTION	16
ADD_MS_RECORD	0 or 8 × EXT_MS_SDU-_LENGTH (see [4])

PDU Format for a mobile station-directed message announcement: There are no Layer 3 fields associated with this record.

PDU Format for an enhanced broadcast page:

Field	Length (bits)
BCN	3
TIME_OFFSET	10
REPEAT_TIME_OFFSET	0 or 5
ADD_BCAST_RECORD	0 or 8 × EXT_BCAST_-SDU_LENGTH (see [4])

CONFIG_MSG_SEQ - Configuration message sequence number.

The base station shall set this field to CONFIG_SEQ (see 3.6.2.2).

ACC_MSG_SEQ - Access parameters message sequence number.

The base station shall set this field to ACC_CONFIG_SEQ (see 3.6.2.2).

READ_NEXT_SLOT - Pages carried into next slot indicator.

If all messages and records directed to mobile stations operating in the slotted mode and active in this slot, are included in this slot, the base station shall set this field to ‘0’; otherwise, the base station shall set this field to ‘1’.

READ_NEXT_SLOT_BCAST - Enhanced Broadcast Pages carried into next slot indicator.

If all enhanced broadcast pages directed to mobile stations operating in the slotted mode and active in this slot to receive enhanced broadcast pages are included in this slot, the base station shall set this field to ‘0’; otherwise, the base station shall set this field to ‘1’.

SERVICE_OPTION - Service option.

The base station shall set this field to the service option code shown in [30], corresponding to the requested service option.

ADD_MS_RECORD - Additional mobile station-addressed information record.

The base station shall omit this field if EXT_MS_SDU_LENGTH_INCL (see [4]) is set to ‘0’; otherwise, the base station shall include EXT_MS_SDU_LENGTH (see [4]) octets in this field.

BCN - Broadcast Control Channel Number.

If NUM_BCCH_BCAST is equal to ‘000’, base station shall set this field to ‘000’ and this field is to be ignored by the mobile station.

Otherwise, the base station shall set this field to the Broadcast Control Channel number of the F-BCCH to which the mobile station is being redirected.

The base station shall not set this field to '000'(reserved) or '001'.

TIME_OFFSET - BCCH offset.

If NUM_BCCH_BCAST is equal to '000', base station shall set this field to one less than the time offset, in units of 40 ms, from the beginning of the slot in which this message began to the beginning of the Forward Common Control Channel slot to which the mobile station is being directed.

Otherwise, the base station shall set this field to one less than the time offset, in units of 40 ms, from the beginning of the slot in which this message began to the beginning of the Broadcast Control Channel slot to which the mobile station is being directed.

REPEAT_TIME_OFFSET - BCCH offset of repeat.

If EXT_BCAST_SDU_LENGTH_IND (see [4]) is set to '01' or '11', the base station shall set this field as follows:

- If NUM_BCCH_BCAST is equal to '000', the base station shall set this field to one less than the time offset, in units of 40 ms, from the time specified by TIME_OFFSET to the beginning of the Forward Common Control Channel slot to which the mobile station is being directed for a repeat of the broadcast message.
- Otherwise, the base station shall set this field to one less than the time offset, in units of 40 ms, from the time specified by TIME_OFFSET to the beginning of the Broadcast Control Channel slot to which the mobile station is being directed for a repeat of the broadcast message.

Otherwise, the base station shall omit this field.

ADD_BCAST_RECORD - Additional broadcast information record.

The base station shall omit this field if EXT_BCAST_SDU_LENGTH_IND (see [4]) is set to '00' or '01'; otherwise, the base station shall include EXT_BCAST_SDU_LENGTH (see [4]) octets in this field.

3.7.2.3.2.37 Authentication Request Message

MSG_TAG: AUREQM

Field	Length (bits)
RANDA	128
CON_SQN	48
AMF	16
MAC_A	64

RANDA – The Random Challenge Number.

The base station shall set this field to the value of the Random Challenge Number in the authentication vector.

CON_SQN – Concealed Sequence Number.

The base station shall set this field to SQN ⊕ AK (Concealed Sequence Number), where SQN and AK are the sequence number and the anonymity key in the authentication vector, respectively.

AMF – Authentication Management Field.

The base station shall set this field to the value of the Authentication Management Field in the authentication vector.

MAC_A – Message Authentication Code.

The base station shall set this field to the value of the Message Authentication Code in the authentication vector.

3.7.2.3.2.38 BCMC Service Parameters Message

MSG_TAG: BSPM

Field	Length (bits)
PILOT_PN	9
BSPM_MSG_SEQ	6

{ (BSPM COMMON RECORD)

BSPM_COMMON_RECORD_LEN	4
DIFF_BSPM	1
AUTO_REQ_ALLOWED_IND	1
FREQ_CHG_REG_REQUIRED	1
FREQ_CHG_REG_TIMER_IND	0 or 1
FREQ_CHG_REG_TIMER	0 or 3
REGISTRATION_REQ_FLAG_INCL	1
REGISTRATION_REQ_TIMER_PERIOD	0 or 8
BCMC_ON_TRAFFIC_SUP	1
AUTH_SIGNATURE_REQUIRED	1
NON_DEFAULT_VALUE_INCLUDED	0 or 1
ACH_TIME_STAMP_SHORT_LENGTH	0 or 8
TIME_STAMP_LONG_LENGTH	0 or 8
TIME_STAMP_UNIT	0 or 4
NUM_FSCH	7
FSCH_PLCM_SCHEME_IND	2
NUM_BCMC_PROGRAMS	8
USE_TIME	1
ACTION_TIME	0 or 6
FRAMING_TYPE	2
FCS_LENGTH	0 or 2
BSPM_COMMON_RECORD_RESERVED	0 ~ 7 (as needed)

} (BSPM COMMON RECORD)

NUM_FSCH occurrences of the following variable length record:

{ (NUM_FSCH)

Field	Length (bits)
FSCH_RECORD_LEN	4
FSCH_BAND_CLASS_INCL	1
FSCH_BAND_CLASS	0 or 5
FSCH_CDMA_FREQ_INCL	1
FSCH_CDMA_FREQ	0 or 11
FSCH_CODE_CHAN	11
FSCH_PLCM_IND	0 or 1
FSCH_PLCM_INDEX	0 or 8
FSCH_MUX_OPTION	16
FSCH_RC	5
FSCH_CODING	1
FSCH_OUTERCODE_INCL	1
FSCH_OUTERCODE_RATE	0 or 3
FSCH_OUTERCODE_OFFSET	0 or 6
FSCH_NUM_BITS_IDX	4
FSCH_FRAME_40_USED	1
FSCH_FRAME_80_USED	1
TDM_STRUCTURE_IND	1
TDM_SLOT_LENGTH	0 or 2
TDM_SUPER_PERIOD_MASK_LEN	0 or 2
TDM_MEGA_PERIOD_MASK_LEN	0 or 2
FSCH_RECORD_RESERVED	0-7 (as needed)

} (NUM_FSCH)

NUM_BCMC_PROGRAMS plus one occurrences of the following variable length record:

{ (NUM_BCMC_PROGRAMS+1)

BCMC_PROGRAM_ID_LEN	5
BCMC_PROGRAM_ID	BCMC_PROGRAM_ID_LEN+1
BCMC_FLOW_DISCRIMINATOR_LEN	3

Field	Length (bits)
NUM_FLOW_DISCRIMINATOR	BCMC_FLOW_DISCRIMINATOR_LEN

NUM_FLOW_DISCRIMINATOR+1 or 1 occurrences of the following variable length record:

{ (NUM_FLOW_DISCRIMINATOR+1) or 1

BCMC_FLOW_DISCRIMINATOR_HEADER_RECORD_LEN	4
BCMC_FLOW_DISCRIMINATOR	BCMC_FLOW_DISCRIMINATOR_LEN
FLOW_INFO_ON_OTHER_FREQ	1
BSPM_CDMA_FREQ_SAME_AS_PREV	0 or 1
BSPM_BAND_CLASS	0 or 5
BSPM_CDMA_FREQ	0 or 11
REGISTRATION_REQ_FLAG	0 or 1
AUTH_SIGNATURE_REQ_IND	0 or 1
BCMC_FLOW_ON_TRAFFIC_IND	0 or 1
NUM_LPM_ENTRIES	0 or 3
BCMC_FLOW_DISCRIMINATOR_HEADER_RECORD_RESERVED	0-7 (as needed)

NUM_LPM_ENTRIES occurrences of the following variable-length record:

{ (NUM_LPM_ENTRIES)

FSCH_ID	7
TDM_USED_IND	0 or 1
TDM_MASK	0 or 4
TDM_SUPER_PERIOD_MASK_INCL	0 or 1
TDM_SUPER_PERIOD_MASK	variable
TDM_MEGA_PERIOD_MASK_INCL	0 or 1
TDM_MEGA_PERIOD_MASK	variable
BSR_ID	3

Field	Length (bits)
NUM_NGHBR	6

NUM_NGHBR occurrences of the following variable length record

{ (NUM_NGHBR)

NGHBR_RECORD_LEN	4
NGHBR_PN	9
NGHBR_BCMC_CONFIG	3
NGHBR_BSR_ID	0 or 3
NGHBR_FSCH_BAND_CLASS_INCL	0 or 1
NGHBR_FSCH_BAND_CLASS	0 or 5
NGHBR_FSCH_CDMA_FREQ_INCL	0 or 1
NGHBR_FSCH_CDMA_FREQ	0 or 11
NGHBR_FSCH_CODE_CHAN_INCL	0 or 1
NGHBR_FSCH_CODE_CHAN	0 or 11
NGHBR_FSCH_PARMS_INCL	0 or 1
NGHBR_FSCH_PLCM_IND	0 or 1
NGHBR_FSCH_PLCM_INDEX	0 or 8
NGHBR_FSCH_MUX_OPTION	0 or 16
NGHBR_FSCH_RC	0 or 5
NGHBR FSCH_CODING	0 or 1
NGHBR_FSCH_OUTERCODE_INCL	0 or 1
NGHBR_FSCH_OUTERCODE_RATE	0 or 3
NGHBR_FSCH_OUTERCODE_OFFSET	0 or 6
NGHBR_FSCH_NUM_BITS_INDX	0 or 4
NGHBR_FSCH_FRAME_40_USED	0 or 1
NGHBR_FSCH_FRAME_80_USED	0 or 1

Field	Length (bits)
NGHBR_RECORD_RESERVED	0-7 (as needed)
} (NUM_NGHBR)	
} (NUM_LPM_ENTRIES)	
} (NUM_FLOW_DISCRIMINATOR+1) or 1	
} (NUM_BCMC_PROGRAMS+1)	
BCMC_NUM_BCCH_NGHBR	3
BCMC_NUM_BCCH_NGHBR occurrences of the following variable length record	
{ (BCMC_NUM_BCCH_NGHBR)	
BCMC_BCCH_NGHBR_PN	9
BCMC_SR1_BCCH_NON_TD_INCL	1
BCMC_SR1_NON_TD_FREQ_INCL	0 or 1
BCMC_SR1_CDMA_FREQ_NON_TD	0 or 11
BCMC_SR1_BRAT_NON_TD	0 or 2
BCMC_SR1_CRAT_NON_TD	0 or 1
BCMC_SR1_BCCH_CODE_CHAN_NON_TD	0 or 6
BCMC_SR1_TD_INCL	1
BCMC_SR1_CDMA_FREQ_TD	0 or 11
BCMC_SR1_BRAT_TD	0 or 2
BCMC_SR1_CRAT_TD	0 or 1
BCMC_SR1_BCCH_CODE_CHAN_TD	0 or 6
BCMC_SR1_TD_MODE	0 or 2
BCMC_SR1_TD_POWER_LEVEL	0 or 2
} (BCMC_NUM_BCCH_NGHBR)	

PILOT_PN - Pilot PN sequence offset index.

The base station shall set this field to the pilot PN sequence offset for this base station, in units of 64 PN chips.

BSPM_MSG_SEQ - BSPM sequence number.

The base station shall set this field to the BCMC Service Parameters Message sequence number.

BSPM_COMMON_RECORD_LEN- BSPM common part record length.

The base station shall set this field to one less the number of octets included in this BSPM common part record including this field.

DIFF_BSPM - Differential BSPM indicator.

If this message contains all the information with respect to the last transmitted BCMC Service Parameters Message, the base station shall set this field to ‘0’; if this message contains only information that changed with respect to the last transmitted BCMC Service Parameters Message, the base station shall set this field to ‘1’.

AUTO_REQ_ALLOWED_IND - Autonomous BCMC request allowed indicator.

The base station shall set this field to ‘1’ to indicate that the mobile station is allowed to request for a BCMC flow that is not included in this message; otherwise, the base station shall set this field to ‘0’.

FREQ_CHG_REG_REQUIRED - Frequency change BCMC registration required indication.

The base station shall set this field to ‘1’ to indicate that the mobile station is to send a Registration Message whenever mobile station changes frequency while monitoring at least one BCMC flow listed on this message; otherwise, the base station shall set this field to ‘0’.

FREQ_CHG_REG_TIMER_IND - Frequency change registration timer indicator.

The base station shall omit this field if the FREQ_CHG_REG_REQUIRED field is set to ‘0’; otherwise, the base station shall include this field and set it as follows:

The base station shall set this field to ‘1’ to indicate frequency change registration timer is enabled; otherwise, the base station shall set this field to ‘0’.

FREQ_CHG_REG_TIMER - Frequency change registration timer.

If the field FREQ_CHG_REG_TIMER_IND is not included or is included and is set to ‘0’, the base station shall omit this field; otherwise, the base station shall include this field and set it as follows:

The base station shall set this field to a value as specified in Table 3.7.2.3.2.38-1 to indicate the duration of time within as specified in Table 3.7.2.3.2.38-1which the mobile station is not to perform another registration due to a frequency change.

Table 3.7.2.3.2.38-1. Value of Frequency change registration timer

FREQ_CHG_REG_TIMER Value (binary)	Timer Length (Minutes)
000	Reserved
001	1
010	2
011	5
100	10
101	20
110	30
111	60

REGISTRATION_REQ_FLAG_INCL - Registration Required Flag Included.

The base station shall set this field to '1' if the registration is required for at least one BCMC flow listed in this message;otherwise the base station shall set this field to '0'.

REGISTRATION_REQ_TIMER_PERIOD - Registration Required Timer Period.

If REGISTRATION_REQ_FLAG_INCL is set to '0', the base station shall omit this field; otherwise, the base station shall include this field and set it to log (base 2) of the maximum value of the BCMC registration required timer divided by 80 msec.

BCMC_ON_TRAFFIC_SUP - BCMC on traffic channel supported indicator.

The base station shall set this field to '1' to indicate that the BCMC feature is supported on traffic channel; otherwise, the base station shall set this field to '0'.

AUTH_SIGNATURE_REQUIRED - Authorization signature required indication.

The base station shall set this field to '1' to indicate that the mobile station is to include the authorization signature in the Registration Message, Origination Message, or Page Response Message for at least one of the BCMC flows included in this message; otherwise, the base station shall set this field to '0'.

NON_DEFAULT_VALUE_INCLUDED - Non-default values for Authorization signature included indicator.

If the AUTH_SIGNATURE_REQUIRED field is set to '0', the base station shall omit this field; otherwise, the base station shall include this field and set it as follows:

The base station shall set this field to '0' if default values are to be used to generate the Authorization signature; otherwise, the base station shall set this field to '1'.

ACH_TIME_STAMP_SHORT_LENGTH - Length of time stamp for use on r-csch.

If the NON_DEFAULT_VALUE_INCLUDED field is not included or is included and is set to '0', the base station shall omit this field; otherwise, the base station shall include this field and set it as follows:

The base station shall set this field to the length of the time stamp, in units of bits, included on the Registration Message, Origination Message, or Page Response Message transmitted on r-csch.

TIME_STAMP_LONG_LENGTH - Length of time stamp.

If the NON_DEFAULT_VALUE_INCLUDED field is not included or is included and is set to '0', the base station shall omit this field; otherwise, the base station shall include this field and set it as follows:

The base station shall set this field to the length of the time stamp, in units of bits, used to generate the Authorization signature.

TIME_STAMP_UNIT - Unit for time stamp length.

If the NON_DEFAULT_VALUE_INCLUDED field is not included or is included and is set to '0', the base station shall omit this field; otherwise, the base station shall include this field and set it as follows:

The base station shall set this field to the unit of the time stamp length field as follows: the unit of the time stamp field shall be 2 to the power of the value of this field.

NUM_FSCH - Number of Forward Supplemental Channels.

The base station shall set this field to the number of Forward Supplemental Channels being transmitted by this base station in any one of the frequencies.

FSCH_PLCM_SCHEME_IND - Forward Supplemental Channels Public Long Code Mask Scheme Indicator.

The base station shall set this field as specified in Table 3.7.2.3.2.38-2 to indicate the Forward Supplemental Channel public long code mask scheme used.

Table 3.7.2.3.2.38-2. Forward Supplemental Channel PLCM scheme used

FSCH_PLCM_SCHEME_IND (binary)	PLCM scheme used
00	PLCM autonomously generated from BCMC_FLOW_ID and BSR_ID corresponding to a BCMC flow on each Forward Supplemental Channel
01	PLCM generated from FSCH_PLCM_INDEX signaled for each Forward Supplemental Channel
10	PLCM scheme individually specified for each Forward Supplemental Channel
11	Reserved

NUM_BCMC_PROGRAMS - Number of BCMC Programs.

The base station shall set this field to the number of BCMC programs available in this base station in any one of the frequencies minus one.

USE_TIME - Use action time indicator.

If an explicit action time is specified in this message, the base station shall set this field to '1'; otherwise, the base station shall set this field to '0'.

ACTION_TIME - Action time.

If the USE_TIME field is set to '0', the base station shall omit this field; otherwise, the base station shall include this field and shall set it to the System Time in units of 80 ms (modulo 64) at which this message takes effect.

FRAMING_TYPE - Framing type.

The base station shall set this field as specified in Table 3.7.2.3.2.38-7 to indicate the framing type used.

Table 3.7.2.3.2.38-7. FRAMING_TYPE values

FRAMING_TYPE (binary)	Framing type used
00	HDLC-like
01	Segment-based
10	Reserved
11	Reserved

FCS_LENGTH - FCS Length.

The base station shall omit this field if the FRAMING_TYPE field is set to '00'; otherwise, the base station shall include this field and set it as follows:

The base station shall set this field as specified in Table 3.7.2.3.2.38-8 to indicate the length of FCS included in BCMC payload.

Table 3.7.2.3.2.38-8. FCS_LENGTH values

FCS_LENGTH (binary)	Length of FCS (bits)
00	0
01	16
10	Reserved
11	Reserved

BSPM_COMMON_RECORD_RESERVED - BSPM common part record reserved bits.

The base station shall add reserved bits as needed in order to make the length of this BSPM common part record equal to an integer number of octets. The base station shall set these bits to '0'.

The base station shall include NUM_FSCH occurrences of the following variable length record:

FSCH_RECORD_LEN - Forward Supplemental Channel record length.

The base station shall set this field to one less the number of octets included in this Forward Supplemental Channel record including this field.

FSCH_BAND_CLASS_INCL - Forward Supplemental Channel band class included indicator.

If this Forward Supplemental Channel resides in the same band class as where this message is being transmitted, the base station shall set this field to ‘0’; otherwise, the base station shall set this field to ‘1’.

FSCH_BAND_CLASS - Band class of the Forward Supplemental Channel.

If the FSCH_BAND_CLASS_INCL field is set to ‘0’, the base station shall omit this field; otherwise, the base station shall include this field and set it as follows:

The base station shall set this field to the CDMA band class, as specified in [30], corresponding to the CDMA frequency assignment containing this Forward Supplemental Channel.

FSCH_CDMA_FREQ_INCL - Forward Supplemental Channel Frequency included indicator.

If this Forward Supplemental Channel resides in the same frequency as where this message is being transmitted, the base station shall set this field to ‘0’; otherwise, the base station shall set this field to ‘1’.

FSCH_CDMA_FREQ - Frequency assignment of the Forward Supplemental Channel.

If the FSCH_CDMA_FREQ_INCL field is set to ‘0’, the base station shall omit this field; otherwise, the base station shall include this field and set it as follows:

The base station shall set this field to the CDMA Channel number corresponding to the CDMA frequency assignment for the CDMA Channel containing this Forward Supplemental Channel.

FSCH_CODE_CHAN - Code channel index of the Forward Supplemental Channel.

The base station shall set this field to the code channel index of this Forward Supplemental Channel as specified in [2].

FSCH_PLCM_IND - Forward Supplemental Channel Public Long Code Mask Scheme Indicator.

If the FSCH_PLCM_SCHEME_IND field is not set to ‘10’, the base station shall omit this field; otherwise, the base stations shall include this field and set it as follows:

If the index to generate PLCM for this Forward Supplemental Channel is signaled in this message, the base station shall set this field to ‘1’; otherwise if the PLCM for this Forward Supplemental Channel is autonomously generated from BCMC_FLOW_ID and BSR_ID corresponding to a BCMC flow on this Forward Supplemental Channel as specified in 2.6.13.10.1, the base station shall set this field to ‘0’.

FSCH_PLCM_INDEX - Index to generate the Forward Supplemental Channel public long code mask.

If the FSCH_PLCM_SCHEME_IND field is set to '01', or the FSCH_PLCM_IND field is included and is set to '1', the base station shall include this field and set it as follows; otherwise, the base station shall omit this field.

The base station shall set this field to the index from which the public long code mask for this Forward Supplemental Channel is generated as specified in 2.6.13.10.2.

FSCH_MUX_OPTION - Multiplex Option of the Forward Supplemental Channel.

The base station shall set this field to the multiplex option of this Forward Supplemental Channel as specified in [3].

FSCH_RC - Radio configuration of the Forward Supplemental Channel.

The base station shall set this field to the radio configuration of this Forward Supplemental Channel as specified in [2].

FSCH_CODING - Coding type of the Forward Supplemental Channel.

The base station shall set this field to '1' if Convolutional Coding will be used when the number of channel bits per frame is less than 360 and Turbo Coding when the number of channel bits per frame is equal to or greater than 360. The base station shall set this field to '0' if Convolution Coding will be used for all block sizes.

FSCH_OUTERCODE_INCL - Forward Supplemental Channel Outer Code included indicator.

The base station shall set this field to '1' if the Forward Supplemental Channel outer code information is included in this message; otherwise, the base station shall set this field to '0'.

FSCH_OUTERCODE_RATE - Outer Code Rate of the Forward Supplemental Channel.

If the FSCH_OUTERCODE_INCL field is set to '0', the base station shall omit this field; otherwise, the base station shall include this field and set it as follows:

The base station shall set this field to specify the outer code rate of the Forward Supplemental Channel as specified in Table 3.7.2.3.2.38-3

Table 3.7.2.3.2.38-3. Forward Supplemental Channel Outer Code Rate

FSCH_OUTERCODE_RATE (binary)	FORWARD SUPPLEMENTAL CHANNEL Outer Code Rate	Length of TDM_SUPER_PERIOD_MASK (bits)
000	11/16	11
001	12/16	12
010	13/16	13
011	14/16	14
100-111	Reserved	Reserved

FSCH_OUTERCODE_OFFSET - Outer Coding Buffer Offset of the Forward Supplemental Channel.

If the FSCH_OUTERCODE_INCL field is set to ‘0’, the base station shall omit this field; otherwise, the base station shall include this field and set it as follows:

The base station shall set this field to specify the outer coding buffer offset of the Forward Supplemental Channel in units of 20ms as specified in [2]. The base station shall set this field to a value between 0 and 63 inclusive.

FSCH_NUM_BITS_INDX - Number of information bits index of the Forward Supplemental Channel.

The base station shall set this field according to Table 3.7.3.3.2.37-4 to indicate the number of information bits per frame and the length of the CRC field for this Forward Supplemental Channel.

FSCH_FRAME_40_USED - Forward Supplemental Channel 40ms frame used indicator.

The base station shall set this field to ‘1’ if 40ms frame is used on this Forward Supplemental Channel; otherwise, the base station shall set this field to ‘0’.

The base station shall not set both FSCH_FRAME_40_USED and FSCH_FRAME_80_USED fields to ‘1’.

FSCH_FRAME_80_USED - Forward Supplemental Channel 80ms frame used indicator.

The base station shall set this field to ‘1’ if 80ms frame is used on this Forward Supplemental Channel; otherwise, the base station shall set this field to ‘0’.

The base station shall not set both FSCH_FRAME_40_USED and FSCH_FRAME_80_USED fields to ‘1’.

TDM_STRUCTURE_IND - TDM structure used indicator.

The base station shall set this field to '1' if a time-division multiplexing structure (i.e. BCMC TDM Mode) is used on this Forward Supplemental Channel; otherwise, the base station shall set this field to '0'.

TDM_SLOT_LENGTH - TDM slot length.

If the TDM_STRUCTURE_IND field is set to '0' or if FSCH_OUTERCODE_INCL field in this record is set to '1', the base station shall omit this field; otherwise, the base station shall include this field and shall set it as follows:

The base station shall set this field to the length of the TDM slot as specified in Table 3.7.2.3.2.38-4.

Table 3.7.2.3.2.38-4. TDM_SLOT_LENGTH values

TDM_SLOT_LENGTH (binary)	**Length of the TDM slot**
00	20 ms
01	40 ms
10	80 ms
11	Reserved

TDM_SUPER_PERIOD_MASK_LEN - TDM super period mask length indicator.

If the TDM_STRUCTURE_IND field is set to '0' or if FSCH_OUTERCODE_INCL field corresponding to FSCH_ID field included in this record is set to '1', the base station shall omit this field; otherwise, the base station shall include this field and set it as follows:

The base station shall set this field to the TDM super period mask length as specified in Table 3.7.2.3.2.38-5.

Table 3.7.2.3.2.38-5. TDM_SUPER PERIOD_MASK_LEN and TDM_MEGA_PERIOD_MASK_LEN values

TDM_SUPER_PERIOD_MASK_LEN or TDM_MEGA_PERIOD_MASK_LEN (binary)	Bits in TDM_SUPER_PERIOD_MASK or TDM_MEGA_PERIOD_MASK
00	4 bits
01	8 bits
10	16 bits
11	Reserved

TDM_MEGA_PERIOD_MASK_LEN - TDM mega period mask length indicator.

If the TDM_STRUCTURE_IND field is set to '0' or if FSCH_OUTERCODE_INCL field corresponding to FSCH_ID field included in this record is set to '0', the base station shall omit this field; otherwise, the base station shall include this field and set it as follows:

The base station shall set this field to the TDM mega period mask length as specified in Table 3.7.2.3.2.38-5.

FSCH_RECORD RESERVED - Forward Supplemental Channel record reserved bits.

The base station shall add reserved bits as needed in order to make the length of this Forward Supplemental Channel record equal to an integer number of octets. The base station shall set these bits to '0'.

The base station shall include NUM_BCMC_PROGRAMS plus one occurrences of the following variable length record:

BCMC_PROGRAM_ID_LEN - Length of BCMC_PROGRAM_ID field.

The base station shall set this field to one less than the length in bits of the BCMC_PROGRAM_ID of this program.

BCMC_PROGRAM_ID - BCMC program Identifier.

The length of this field shall be one more than the value of BCMC_PROGRAM_ID_LEN bits.

The base station shall set this field to the BCMC program identifier of this program.

BCMC_FLOW_DISCRIMINATOR_LEN - Length of BCMC_FLOW_DISCRIMINATOR field.

The base station shall set this field to the length in bits of the BCMC_FLOW_DISCRIMINATOR of this program.

NUM_FLOW_DISCRIMINATOR - Number of BCMC flow discriminators.

The length of this field shall be determined by the value of the BCMC_FLOW_DISCRIMINATOR_LEN as follows: if BCMC_FLOW_DISCRIMINATOR_LEN is set to '000', this field is omitted; otherwise, the length of this field shall be BCMC_FLOW_DISCRIMINATOR_LEN bits.

The base station shall set this field to the number of flow discriminators included for this program minus one.

If NUM_FLOW_DISCRIMINATOR field is included, the base station shall include NUM_FLOW_DISCRIMINATOR+1 occurrences of the following variable length record; otherwise, the base station shall include 1 occurrence of the following variable length record:

BCMC_FLOW_DISCRIMINATOR_HEADER_RECORD_LEN - BCMC flow discriminator header record length.

The base station shall set this field to one less the number of octets included in this BCMC flow discriminator header record including this field.

BCMC_FLOW_DISCRIMINATOR - BCMC flow discriminator.

The length of this field shall be determined by the value of the BCMC_FLOW_DISCRIMINATOR_LEN as follows: if BCMC_FLOW_DISCRIMINATOR_LEN is set to '000', this field is omitted; otherwise, the length of this field shall be BCMC_FLOW_DISCRIMINATOR_LEN bits.

The base station shall set this field to the BCMC flow discriminator of this flow.

FLOW_INFO_ON_OTHER_FREQ - BCMC flow information on another frequency indicator.

The base station shall set this field to '1' if the information on this BCMC flow is available on another frequency; otherwise, the base station shall set this field to '0'.

BSPM_CDMA_FREQ_SAME_AS_PREV - BSPM CDMA Frequency same as previous indicator.

If the FLOW_INFO_ON_OTHER_FREQ field is set to '0', the base station shall omit this field; otherwise, the base station shall include this field and set it as follows:

The base station shall set this field to '1' if the CDMA channel number and band class where the BCMC Service Parameters Message containing information on this BCMC flow is transmitted is the same as the one for the previous BCMC flow listed in this message.

BSPM_BAND_CLASS- BSPM band class.

If the BSPM_CDMA_FREQ_SAME_AS_PREV field is not included or included and set to '1', the base station shall omit this field; otherwise, the base station shall include this field and set it as follows:

The base station shall set this field to the CDMA band class where the BCMC Service Parameters Message containing information on this BCMC flow is transmitted.

BSPM_CDMA_FREQ - BSPM Frequency.

If the BSPM_CDMA_FREQ_SAME_AS_PREV field is not included or included and set to '1', the base station shall omit this field; otherwise, the base station shall include this field and set it as follows:

The base station shall set this field to the CDMA channel number where the BCMC Service Parameters Message containing information on this BCMC flow is transmitted.

REGISTRATION_REQ_FLAG - Registration Required Flag.

If FLOW_INFO_ON_OTHER_FREQ is set to '1' or REGISTRATION_REQ_FLAG_INCL is set to '0', the base station shall omit this field; otherwise, the base station shall include this field and set it as follows:

The base station shall set this field to '1' if registration is required for this BCMC flow. Otherwise, the base station shall set this field to '0'.

AUTH_SIGNATURE_REQ_IND - Authorization signature required indicator.

If FLOW_INFO_ON_OTHER_FREQ is set to '1' or the AUTH_SIGNATURE_REQUIRED field is set to '0', the base station shall omit this field; otherwise, the base station shall include this field and set it as follows:

The base station shall set this field to '1' if the mobile station is to include the authorization signature in the Registration Message, Origination Message, or Page Response Message for this BCMC flow; otherwise, the base station shall set this field to '0'.

BCMC_FLOW_ON_TRAFFIC_IND - BCMC flow on traffic channel supported indicator.

If FLOW_INFO_ON_OTHER_FREQ is set to '1' or BCMC_ON_TRAFFIC_SUP is set to '0', the base station shall omit this field; otherwise, the base station shall include this field and set it as follows:

The base station shall set this field to '1' if this BCMC flow is available on traffic channel; otherwise, the base station shall set this field to '0'.

NUM_LPM_ENTRIES - Number of Logical-to-Physical Mapping Entries.

If the FLOW_INFO_ON_OTHER_FREQ field is set to '1', the base station shall omit this field; otherwise, the base station shall include this field and set it as follows:

The base station shall set this field to the number of logical to physical mapping included for this BCMC flow.

BCMC_FLOW_DISCRIMINATOR_HEADER_RECORD_RESERVED - BCMC flow discriminator header record reserved bits.

The base station shall add reserved bits as needed in order to make the length of this BCMC flow discriminator header record equal to an integer number of octets. The base station shall set these bits to '0'.

The base station shall include NUM_LPM_ENTRIES occurrences of the following variable-length record:

FSCH_ID - Forward Supplemental Channel Identifier.The base station shall set this field to the identifier corresponding to the Forward Supplemental Channel on which the above BCMC flow is being transmitted.The Forward Supplemental Channel included first in this message is given the FSCH_ID of '0000000', the second one listed is given the FSCH_ID of '0000001', and so on.

TDM_USED_IND - TDM used indicator.

If the TDM_STRUCTURE_IND field for the Forward Supplemental Channel specified by this FSCH_ID is set to '0', the base station shall omit this field; otherwise, the base station shall include this field and set it as follows:

The base station shall set this field to '1' if a time-division multiplexing structure (i.e. BCMC TDM Mode) is used on the Forward Supplemental Channel for this flow; otherwise, the base station shall set this field to '0'.

TDM_MASK - TDM mask.

If the TDM_USED_IND field is not included or is included and is set to '0', the base station shall omit this field; otherwise, the base station shall include this field and set it as follows:

If FSCH_OUTERCODE_INCL field corresponding to FSCH_ID field included in this record is set to '1', the duration of a slot is 20 ms; otherwise, duration of a slot is indicated by TDM_SLOT_LENGTH. For each bit of this field, the base station set it to '1' if this flow is assigned to the corresponding slot. For each bit of this field, the base station shall set it to '0' if this flow is not assigned to the corresponding slot.

TDM_SUPER_PERIOD_MASK_INCL - TDM super period mask included indicator.

If the TDM_USED_IND field is not included or is included and is set to '0', the base station shall omit this field; otherwise, the base station shall include this field and set it as follows:

The base station set it to '1' if TDM_SUPER_PERIOD_MASK field is included in this message; otherwise, the base station shall set it to '0'.

TDM_SUPER_PERIOD_MASK - TDM super period mask.

If the TDM_SUPER_PERIOD_MASK_INCL field is not included or is included and is set to ‘0’, the base station shall omit this field; otherwise, the base station shall include this field and set it as follows:

If FSCH_OUTERCODE_INCL field corresponding to FSCH_ID field included in this record is set to ‘0’, then number of bits included in this field is indicated by TDM_SUPER_PERIOD_MASK_LEN field. Otherwise, number of bits included in this field is set as specified in Table 3.7.2.3.2.38-3, based on FSCH_OUTERCODE_RATE field corresponding to FSCH_ID field included in this record.

Duration of super slot is 4 slots. For each bit of this field, the base station set it to ‘1’ if the TDM_MASK specified above applies to the corresponding super slot. For each bit of this field, the base station shall set it to ‘0’ if the TDM_MASK specified above does not apply to the corresponding super slot.

If FSCH_OUTERCODE_INCL field corresponding to FSCH_ID field included in this record is set to ‘1’, the super period mask bits for parity frames (16 – bits included in this field) are not specified.

If TDM_SUPER_PERIOD_MASK is not included in this message, then it is considered equivalent to TDM_SUPER_PERIOD_MASK being implicitly included with all bits set to ‘1’.

TDM_MEGA_PERIOD_MASK_INCL - TDM mega period mask included indicator.

If the TDM_USED_IND field is not included or is included and is set to ‘0’, the base station shall omit this field; otherwise, the base station shall include this field and set it as follows:

The base station set it to ‘1’ if TDM_MEGA_PERIOD_MASK field is included in this message; otherwise, the base station shall set it to ‘0’.

TDM_MEGA_PERIOD_MASK - TDM mega period mask.

If the TDM_MEGA_PERIOD_MASK_INCL field is not included or is included and is set to ‘0’, the base station shall omit this field; otherwise, the base station shall include this field and set it as follows:

If FSCH_OUTERCODE_INCL field corresponding to FSCH_ID field included in this record is set to ‘1’, then number of bits included in this field is indicated by TDM_MEGA_PERIOD_MASK_LEN field. Otherwise, number of bits included in this field is set as specified in Table 3.7.2.3.2.38-6.

Table 3.7.2.3.2.38-6. Length of TDM_MEGA_PERIOD_MASK

TDM_SUPER_PERIOD_ MASK_INCL (binary)	Length of TDM_MEGA_PERIOD_ MASK (bits)
0	8
1	4

If FSCH_OUTERCODE_INCL field corresponding to FSCH_ID field included in this record is set to '1', duration of mega slot is 16 super slots. Otherwise, duration of mega slot is number of bits in TDM_SUPER_PERIOD_MASK times duration of super slot.

For each bit of this field, the base station set it to '1' if the TDM_SUPER_PERIOD_MASK specified above applies to the corresponding mega slot. For each bit of this field, the base station shall set it to '0' if the TDM_SUPER_PERIOD_MASK specified above does not apply to the corresponding mega slot.

BSR_ID - BCMC Service Reference Identifier.

The base station shall set this field to the BCMC Service Reference identifier corresponding to this BCMC flow on this Forward Supplemental Channel.

The base station shall not set this field to a value of 0.

NUM_NGHBR - Number of neighbor base stations.

The base station shall set this field to the number of neighbor base stations included in this message for this logical-to-physical mapping entry.

The base station shall include NUM_NGHBR occurrences of the following variable length record.

NGHBR_RECORD_LEN - Neighbor record length.

The base station shall set this field to one less the number of octets included in this neighbor record including this field.

NGHBR_PN - Neighbor pilot PN sequence offset index.

The base station shall set this field to the pilot PN sequence offset for this neighbor base station, in units of 64 PN chips.

NGHBR_BCMC_CONFIG - Neighbor BCMC Configuration.

The base station shall set this field as specified in Table 3.7.2.3.2.38-6 to indicate the configuration of this BCMC flow in this neighbor base station.

Table 3.7.2.3.2.38-6. Neighbor BCMC Configuration Field

Value (binary)	Neighbor BCMC Configuration
000	The neighbor base station configuration with respect to this BCMC flow is not known or the neighbor base station is not configured to transmit this BCMC flow.
001	The neighbor base station is transmitting this BCMC flow on idle state. Autonomous soft-handoff of the Forward Supplemental Channel carrying this BCMC flow is not possible with this neighbor base station.
010	The neighbor base station is transmitting this BCMC flow on idle state. Autonomous soft-handoff of the Forward Supplemental Channel carrying this BCMC flow is possible with this neighbor base station.
011	The neighbor base station supports this BCMC flow on traffic channel.
100-111	Reserved.

NGHBR_BSR_ID - Neighbor BCMC Service Reference Identifier.

If the NGHBR_BCMC_CONFIG field is set to '000', '010', or '011', the base station shall omit this field; otherwise, the base station shall include this field and set it as follows.

The base station shall set this field to the BCMC Service Reference identifier corresponding to this BCMC flow in the neighbor base station.

The base station shall not set this field to a value of 0.

NGHBR_FSCH_BAND_CLASS_INCL - Neighbor Forward Supplemental Channel band class included indicator.

If the NGHBR_BCMC_CONFIG field is set to '000' '010', or '011', the base station shall omit this field; otherwise, the base station shall include this field and set it as follows.

If this F-SCH in the neighbor base station resides in the same band class as in this base station, the base station shall set this field to '0'; otherwise, the base station shall set this field to '1'.

NGHBR_FSCH_BAND_CLASS - Band class of the Forward Supplemental Channel in the neighbor base station.

If the NGHBR_FSCH_BAND_CLASS_INCL field is not included in this message or is included and is set to ‘0’, the base station shall omit this field; otherwise, the base station shall include this field and set it as follows:

The base station shall set this field to the CDMA band class, as specified in [30], corresponding to the CDMA frequency assignment containing this Forward Supplemental Channel in the neighbor base station.

NGHBR_FSCH_CDMA_FREQ_INCL - Neighbor frequency included indicator.

If the NGHBR_BCMC_CONFIG field is set to ‘000’, ‘010’, or ‘011’, the base station shall omit this field; otherwise, the base station shall include this field and set it as follows.

If this F-SCH in the neighbor base station resides in the same frequency as in this base station, the base station shall set this field to ‘0’; otherwise, the base station shall set this field to ‘1’.

NGHBR_FSCH_CDMA_FREQ- Frequency assignment of the Forward Supplemental Channel in the neighbor base station.

If the NGHBR_FSCH_CDMA_FREQ_INCL field is not included in this message or is included and is set to ‘0’, the base station shall omit this field; otherwise, the base station shall include this field and set it as follows.

The base station shall set this field to the CDMA Channel number corresponding to the CDMA frequency assignment for the CDMA Channel containing this Forward Supplemental Channel in this neighbor base station.

NGHBR_FSCH_CODE_CHAN_INCL - Neighbor pilot Forward Supplemental Channel Code Channel Index Included Indicator.

If the NGHBR_BCMC_CONFIG field is set to ‘000’ or ‘011’ the base station shall omit this field; otherwise, the base station shall include this field and set it as follows.

If this F-SCH in the neighbor base station uses the same code channel as in this base station, the base station shall set this field to ‘0’; otherwise, the base station shall set this field to ‘1’.

NGHBR_FSCH_CODE_CHAN- Neighbor pilot Forward Supplemental Channel Code Channel Index.

If the NGHBR_FSCH_CODE_CHAN_INCL field is not included in this message or is included and is set to ‘0’, the base station shall omit this field; otherwise, the base station shall include this field and set it as follows.

The base station shall set this field to the code channel index that the mobile station is to use for this Forward Supplemental Channel on this neighbor base station.

NGHBR_FSCH_PARMS_INCL- Neighbor Forward Supplemental Channel Parameters Included Indicator.

If the NGHBR_BCMC_CONFIG field is set to ‘000’, ‘010’, or ‘011’, the base station shall omit this field; otherwise, the base station shall include this field and set it as follows.

If this F-SCH in the neighbor base station uses the same physical layer parameters as in this base station, the base station shall set this field to ‘0’; otherwise, the base station shall set this field to ‘1’.

NGHBR_FSCH_PLCM_IND - Neighbor Forward Supplemental Channel Public Long Code Mask Scheme Indicator.

If the NGHBR_FSCH_PARMS_INCL field is not included in this message, or is included and is set to ‘0’, the base station shall omit this field; otherwise, the base station shall include this field and set it as follows.

If the index to generate PLCM for this Forward Supplemental Channel is signaled in this message, the base station shall set this field to ‘1’; otherwise if the PLCM for this Forward Supplemental Channel is autonomously generated from BCMC_FLOW_ID and BSR_ID corresponding to a BCMC flow on this Forward Supplemental Channel as specified in 2.6.13.10.1, the base station shall set this field to ‘0’.

NGHBR_FSCH_PLCM_INDEX - Index to generate the Forward Supplemental Channel public long code mask.

If the NGHBR_FSCH_PLCM_IND field is not included or is included and is set to ‘0’, the base station shall omit this field; otherwise, the base station shall include and set it as follows.

The base station shall set this field to the index from which the public long code mask for this Forward Supplemental Channel is generated as specified in 2.6.13.10.2.

NGHBR_FSCH_MUX_OPTION - Multiplex Option of the Forward Supplemental Channel in the neighbor base station.

If the NGHBR_FSCH_PARMS_INCL field is not included in this message or is included and is set to ‘0’, the base station shall omit this field; otherwise, the base station shall include this field and set it as follows.

The base station shall set this field to the multiplex option of this Forward Supplemental Channel in the neighbor base station as specified in [3].

NGHBR_FSCH_RC - Radio configuration of the Forward Supplemental Channel in the Neighbor Base Station.

If the NGHBR_FSCH_PARMS_INCL field is not included in this message or is included and is set to ‘0’, the base station shall omit this field; otherwise, the base station shall include this field and set it as follows.

The base station shall set this field to the radio configuration to be used by the mobile station for this Forward Supplemental Channel in this neighbor base station as specified in [2].

NGHBR_FSCH_CODING - Coding type of the Forward Supplemental Channel in this neighbor base station.

If the NGHBR_FSCH_PARMS_INCL field is not included in this message or is included and is set to '0', the base station shall omit this field; otherwise, the base station shall include this field and set it as follows.

The base station shall set this field to '1' if Convolutional Coding will be used when the number of channel bits per frame is less than 360 and Turbo Coding when the number of channel bits per frame is equal to or greater than 360. The base station shall set this field to '0' if Convolution Coding will be used for all block sizes.

NGHBR_FSCH_OUTERCODE_INCL - Forward Supplemental Channel Outer Code included indicator for this neighbor base station.

If the NGHBR_FSCH_PARMS_INCL field is not included in this message or is included and is set to '0', the base station shall omit this field; otherwise, the base station shall include this field and set it as follows.

The base station shall set this field to '1' if the Forward Supplemental Channel outer code information for this neighbor base station is included in this message; otherwise, the base station shall set this field to '0'.

NGHBR_FSCH_OUTERCODE_RATE - Outer Code Rate of the Forward Supplemental Channel in this neighbor base station.

If the FSCH_OUTERCODE_INCL field is not included or is included and set to '0', the base station shall omit this field; otherwise, the base station shall include this field and set it as follows:

The base station shall set this field to specify the outer code rate of the Forward Supplemental Channel as specified in Table 3.7.2.3.2.38-3.

NGHBR_FSCH_OUTERCODE_OFFSET - Outer Coding Buffer Offset of the Forward Supplemental Channel in this neighbor base station.

If the FSCH_OUTERCODE_INCL field is not included or is included and is set to '0', the base station shall omit this field; otherwise, the base station shall include this field and set it as follows:

The base station shall set this field to specify the outer coding buffer offset of the Forward Supplemental Channel in units of 20ms as specified in [2]. The base station shall set this field to a value between 0 and 63 inclusive.

NGHBR_FSCH_NUM_BITS_IDX - Number of Information bits index of the Forward Supplemental Channel in the Neighbor Base Station.

If the NGHBR_FSCH_PARMS_INCL field is not included in this message or is included and is set to '0', the base station shall omit this field; otherwise, the base station shall include this field and set it as follows.

The base station shall set this field according to Table 3.7.3.3.2.37-4 to indicate the number of information bits per frame and the length of the CRC field for this Forward Supplemental Channel in this neighbor base station.

NGHBR_FSCH_FRAME_40_USED - Forward Supplemental Channel 40ms frame used indicator in the Neighbor Base Station.

If the NGHBR_FSCH_PARMS_INCL field is not included in this message or is included and is set to '0', the base station shall omit this field; otherwise, the base station shall include this field and set it as follows.

The base station shall set this field to '1' if 40ms frame is used on this Forward Supplemental Channel in this neighbor base station; otherwise, the base station shall set this field to '0'.

The base station shall not set both NGHBR_FSCH_FRAME_40_USED and NGHBR_FSCH_FRAME_80_USED fields to '1'.

NGHBR_FSCH_FRAME_80_USED - Forward Supplemental Channel 80ms frame used indicator in the Neighbor Base Station.

If the NGHBR_FSCH_PARMS_INCL field is not included in this message or is included and is set to '0', the base station shall omit this field; otherwise, the base station shall include this field and set it as follows.

The base station shall set this field to '1' if 80ms frame is used on this Forward Supplemental Channel in this neighbor base station; otherwise, the base station shall set this field to '0'.

The base station shall not set both NGHBR_FSCH_FRAME_40_USED and NGHBR_FSCH_FRAME_80_USED fields to '1'.

NGHBR_RECORD_RESERVED - Neighbor record reserved bits.

The base station shall add reserved bits as needed in order to make the length of this neighbor record equal to an integer number of octets. The base station shall set these bits to '0'.

BCMC_NUM_BCCH_NGHBR - Number of neighbor base stations that support Broadcast Control Channel.

The base station shall set this field to the number of neighbor base stations included in this message that support Primary Broadcast Control Channel and support BCMC on idle state.

BCMC_BCCH_NGHBR_PN - Neighbor Pilot PN sequence offset index.

The base station shall set this field to the pilot PN sequence offset for this neighbor base station, in units of 64 PN chips.

BCMC_SR1_BCCH_NON_TD_INCL - Common Channel in non TD mode on Spreading Rate 1 information included indicator.

The base station shall set this field to '1' if the base station includes common channels (BCCH/F-CCCH/EACH) information in non TD mode; otherwise, the base station shall set this field to '0'.

BCMC_SR1_NON_TD_FREQ_INCL - Non Transmit Diversity frequency included indicator.

If BCMC_SR1_BCCH_NON_TD_INCL is not included, or is included and set to '0', the base station shall omit this field; otherwise, the base station shall set this field as follows:

The base station shall set this field to '1' if BCMC_SR1_CDMA_FREQ_NON_TD is included in the message. Otherwise, base station shall set this field to '0'.

BCMC_SR1_CDMA_FREQ_NON_TD - Frequency assignment for non-transmit diversity operation.

If BCMC_SR1_NON_TD_FREQ_INCL is not included, or is included and set to '0', the base station shall omit this field; otherwise, the base station shall set this field as follows:

The base station shall set this field to the CDMA Channel number corresponding to the CDMA frequency assignment for the CDMA Channel containing a Broadcast Control Channel that does not support the TD operation.

BCMC_SR1_BRAT_NON_TD - BCCH data rate in non-TD mode for Spreading Rate 1.

If BCMC_SR1_BCCH_NON_TD_INCL is not included, or is included and set to '0', the base station shall omit this field; otherwise, the base station shall set this field as follows:

The base station shall set this field to the BRAT field value shown in Table 3.7.2.3.2.26-2 corresponding to the data rate used by the Primary Broadcast Control Channel in the system.

BCMC_SR1_CRAT_NON_TD – BCCH code rate in non Transmit Diversity mode for Spreading Rate 1.

If BCMC_SR1_BCCH_NON_TD_INCL is not included, or is included and set to '0', the base station shall omit this field; otherwise, the base station shall set this field as follows:

The base station shall set this field to '0' if the BCCH Code Rate is 1/4 (see [2]). The base station shall set this field to '1' if the BCCH code rate is 1/2 (see [2]).

BCMC_SR1_BCCH_CODE_CHAN_NON_TD – Walsh code for the Spreading Rate 1 BCCH in non Transmit Diversity mode.

If BCMC_SR1_BCCH_NON_TD_INCL is not included, or is included and set to '0', the base station shall omit this field; otherwise, the base station shall set this field as follows:

The base station shall set this field to the Walsh code corresponding to the Spreading Rate 1 BCCH in non Transmit Diversity mode.

BCMC_SR1_TD_INCL - Spreading Rate 1 Transmit Diversity frequency information included indicator.

The base station shall set this field to '1' if BCMC_SR1_CDMA_FREQ_TD, BCMC_SR1_BRAT_TD, BCMC_SR1_CRAT_TD, BCMC_SR1_TD_MODE, and BCMC_SR1_TD_POWER_LEVEL are included in the message; otherwise, the base station shall set this field to '0'.

BCMC_SR1_CDMA_FREQ_TD - Spreading Rate 1 frequency assignment for Transmit Diversity operation.

If BCMC_SR1_TD_INCL is not included, or is included and set to '0', the base station shall omit this field; otherwise, the base station shall set this field as follows:

The base station shall set this field to the CDMA Channel number corresponding to the CDMA frequency assignment for the CDMA Channel containing a BCCH Channel that supports the TD operation.

BCMC_SR1_BRAT_TD - BCCH data rate in Transmit Diversity mode for Spreading Rate 1.

If BCMC_SR1_TD_INCL is not included, or is included and set to '0', the base station shall omit this field; otherwise, the base station shall set this field as follows:

The base station shall set this field to the BRAT field value shown in Table 3.7.2.3.2.26-2 corresponding to the data rate used by the Primary Broadcast Control Channel in the system.

BCMC_SR1_CRAT_TD – BCCH code rate in Transmit Diversity mode for Spreading Rate 1.

If BCMC_SR1_TD_INCL is not included, or is included and set to '0', the base station shall omit this field; otherwise, the base station shall set this field as follows:

The base station shall set this field to '0' if the BCCH Code Rate is 1/4 (see [2]). The base station shall set this field to '1' if the BCCH Code Rate is 1/2 (see [2]).

BCMC_SR1_BCCH_CODE_CHAN_TD – Walsh code for the Spreading Rate 1 BCCH in Transmit Diversity mode.

If BCMC_SR1_TD_INCL is not included, or is included and set to '0', the base station shall omit this field; otherwise, the base station shall set this field as follows:

The base station shall set this field to the Walsh code corresponding to the Spreading Rate 1 BCCH in Transmit Diversity mode.

BCMC_SR1_TD_MODE - Spreading Rate 1 Transmit Diversity Mode.

If BCMC_SR1_TD_INCL is not included, or is included and set to '0', the base station shall omit this field; otherwise, the base station shall set this field as follows:

The base station shall set this field corresponding to Table 3.7.2.3.2.26-3.

BCMC_SR1_TD_POWER_LEVEL - Spreading Rate 1 TD transmit power level.

If BCMC_SR1_TD_INCL is not included, or is included and set to '0', the base station shall omit this field; otherwise, the base station shall set this field as follows:

The base station shall set this field to the TD transmit power level relative to that of the Forward Pilot Channel, as specified in Table 3.7.2.3.2.26-4.

3.7.2.3.2.39 Access Point Identification Message

MSG_TAG: APIDM

Field	Length (bits)
PILOT_PN	9
CONFIG_MSG_SEQ	6
ASSTN_TYPE	3
SID	15
NID	16
AP_ID_LEN	4
AP_ID	16 x AP_ID_LEN
AP_ID_MASK	8
IOS_MSC_ID	24
IOS_CELL_ID	16
HRPD_ACQ_REC_INCL	1
HRPD_PN	0 or 9
HRPD_BAND_CLASS	0 or 5
HRPD_CHANNEL	0 or 11
LOC_REC_TYPE	3
LOC_REC_LEN	5
LOC_REC	8 x LOC_REC_LEN
INTRA_FREQ_HO_HYS_INCL	1
INTRA_FREQ_HO_HYS	0 or 7
INTRA_FREQ_HO_SLOPE_INCL	1
INTRA_FREQ_HO_SLOPE	0 or 6
INTER_FREQ_HO_HYS_INCL	1
INTER_FREQ_HO_HYS	0 or 7
INTER_FREQ_HO_SLOPE_INCL	1
INTER_FREQ_HO_SLOPE	0 or 6
INTER_FREQ_SRCH_TH_INCL	1
INTER_FREQ_SRCH_TH	0 or 5

PILOT_PN - Pilot PN sequence offset index.

The base station shall set this field to the pilot PN sequence offset for this base station, in units of 64 PN chips.

CONFIG_MSG_SEQ - Configuration message sequence number.

The base station shall set this field to CONFIG_SEQ (see 3.6.2.2).

ASSTN_TYPE - Association Type.

The base station shall set this field to the value shown in Table 3.7.2.3.2.39-1 corresponding to the configuration of the base station.

Table 3.7.2.3.2.39-1. Association Type Field

Value (binary)	Association Type
000	The base station allows any mobile stations to register and receive any services available at the base station.
001	The base station only allows any mobile stations to register and receive page on the base station.
010	The base station only allows selected mobile stations to register and only provides services to the selected mobile stations.
011-111	Reserved.

SID - System identification.

The base station shall set this field to the system identification number for this system (see 2.6.5.2).

NID - Network identification.

This field serves as a sub-identifier of a system as defined by the owner of the SID.

The base station shall set this field to the network identification number for this network (see 2.6.5.2).

AP_ID_LEN - Access Point identification length.

The base station shall set this field to the length of the access point identification in units of 16 bits.

AP_ID - Access Point identification.

The base station shall set this field to its access point identification number.

AP_ID_MASK - Access Point identification mask.

The base station shall set this field to the number of consecutive bits (starting from the most significant bit) of AP_ID which identifies the group of access points.

IOS_MSC_ID - MSC_ID of the base station.

The base station shall set this field to the MSC_ID value that the other base station uses in the network (see [48]) for handoff into this base station.

IOS_CELL_ID - CELL_ID of the base station.

The base station shall set this field to the CELL_ID value that the other base station uses in the network (see [48]) for handoff into this base station.

HRPD_ACQ_REC_INCL - HRPD Acquisition Record Included.

The base station shall set this field to '1' if the message includes HRPD acquisition information. Otherwise, this field shall be set to '0'.

HRPD_PN - HRPD pilot PN sequence offset index.

If the HRPD_ACQ_REC_INCL field is set to '1', then this field is set to the pilot PN sequence offset corresponding to the HRPD pilot at this access point, in units of 64 PN chips. Otherwise, this field shall be omitted.

HRPD_BAND_CLASS - HRPD Band Class.

If the HRPD_ACQ_REC_INCL field is set to '1', then this field is set to the Band Class number corresponding to the frequency assignment of the channel allocated to the HRPD pilot at this access point. Otherwise, this field shall be omitted.

HRPD_CHANNEL - HRPD Channel.

If the HRPD_ACQ_REC_INCL field is set to '1', then this field is set to the channel number corresponding to the Band Class of the HRPD pilot at this access point. Otherwise, this field shall be omitted.

LOC_REC_TYPE - Location record type.

The base station shall set this field based on the type of the LOC_REC field included in this message.

LOC_REC_LEN - Location record length.

The base station shall set this field to the number of octets in the fields included in LOC_REC field. If LOC_REC_TYPE field is set to '000', then this field shall be set to zero.

LOC_REC - Location record.

The Location record fields are determined by the value of LOC_REC_TYPE, as described below.

If LOC_REC_TYPE = '000', the LOC_REC field shall be omitted.

If LOC_REC_TYPE = '001', the LOC_REC field shall be:

BASE_LAT	22
BASE_LONG	23
LOC_UNC_H	4
BASE_HEIGHT	14
LOC_UNC_V	4
Reserved	0-7

If LOC_REC_TYPE field is set to '001', the base station shall include the following sub-fields in LOC_REC field:

BASE_LAT - Base station latitude.

The base station shall set this field to its latitude in units of 0.25 second, expressed as a two's complement signed number with positive numbers signifying North latitudes. The base station shall set this field to a value in the range -1296000 to 1296000 inclusive (corresponding to a range of -90° to +90°). The base station shall set this field to all zeros if its latitiude is not known.

BASE_LONG - Base station longitude.

The base station shall set this field to its longitude in units of 0.25 second, expressed as a two's complement signed number with positive numbers signifying East longitude. The base station shall set this field to a value in the range -2592000 to 2592000 inclusive (corresponding to a range of -180° to +180°). The base station shall set this field to all zeros if its longitude is not known.

LOC_UNC_H – Horizontal location uncertainty.

The base station shall set this field to the circular horizontal location uncertainty, as specified in Table 3.7.2.3.2.39-2. The value of this field indicates the radius of a circular 95% confidence coverage area.

Table 3.7.2.3.2.39-2. Horizontal Position Uncertainty

'0000'	LOC_UNC_H < 20 m
'0001'	20 m • LOC_UNC_H < 40 m
'0010'	40 m • LOC_UNC_H < 70 m
'0011'	70 m • LOC_UNC_H < 100 m
'0100'	100 m • LOC_UNC_H < 200 m
'0101'	200 m • LOC_UNC_H < 400 m
'0110'	400 m • LOC_UNC_H < 700 m
'0111'	700 m • LOC_UNC_H < 1,000 m
'1000'	1,000 m • LOC_UNC_H < 2,000 m

‘1001’	2,000 m • LOC_UNC_H < 4,000 m
‘1010’	4,000 m • LOC_UNC_H < 7,000 m
‘1011’	7,000 m • LOC_UNC_H < 10,000 m
‘1100’	10,000 m • LOC_UNC_H < 20,000 m
‘1101’	20,000 m • LOC_UNC_H < 40,000 m
‘1110’	40,000 m • LOC_UNC_H < 70,000 m
‘1111’	70,000 m • LOC_UNC_H

BASE_HEIGHT - Base station height.

The base station shall this field to the height, above the WGS-84 reference ellipsoid, in units of 1 meter, in the range from -500 m to 15,882 m, where the binary value of the field conveys the height plus 500 m. The base station shall set this field to all ones if its height is not known.

LOC_UNC_V – Vertical location uncertainty.

The base station set this field to the vertical location uncertainty, as specified in Table 3.7.2.3.2.39-3. The value of this field indicates the one-sigma uncertainty of HEIGHT within the corresponding horizontal coverage area.

Table 3.7.2.3.2.39-3. Vertical Position Uncertainty

‘0000’	0< LOC_UNC_V < 1 m
‘0001’	1 m • LOC_UNC_V < 2 m
‘0010’	2 m • LOC_UNC_V < 4 m
‘0011’	4 m • LOC_UNC_V < 7 m
‘0100’	7 m • LOC_UNC_V < 10 m
‘0101’	10 m • LOC_UNC_V < 20 m
‘0110’	20 m • LOC_UNC_V < 40 m
‘0111’	40 m • LOC_UNC_V < 70 m
‘1000’	70 m • LOC_UNC_V < 100 m
‘1001’	100 m • LOC_UNC_V < 200 m
‘1010’	200 m • LOC_UNC_V < 400 m
‘1011’	400 m • LOC_UNC_V < 700 m
‘1100’	700 m • LOC_UNC_V < 1,000 m
‘1101’	1,000 m • LOC_UNC_V < 2,000 m
‘1110’	2,000 m • LOC_UNC_V < 4,000 m

'1111'	4,000 m • LOC_UNC_V

INTRA_FREQ_HO_HYS_INCL - Intra-frequency idle handoff hysteresis included.

The base station shall set this field to '1' if the message includes intra-frequency idle handoff hysteresis information. Otherwise, this field shall be set to '0'.

INTRA_FREQ_HO_HYS - Intra-frequency idle handoff hysteresis.

If the INTRA_FREQ_HO_HYS_INCL field is set to '1', then the base station shall set this field to the intra-frequency idle handoff hysteresis value in units of dB (see 2.6.2.1.4.1), expressed as an unsigned binary number.

If the INTRA_FREQ_HO_HYS_INCL field is set to '0', then this field shall be omitted.

INTRA_FREQ_HO_SLOPE_INCL - Intra-frequency idle handoff slope included.

The base station shall set this field to '1' if the message includes intra-frequency idle handoff slope information. Otherwise, this field shall be set to '0'. This field shall not be set to '1' if INTRA_FREQ_HO_HYS_INCL field is not set to '1'.

INTRA_FREQ_HO_SLOPE - Intra-frequency idle handoff slope.

If the INTRA_FREQ_HO_SLOPE_INCL field is set to '1', then the base station shall set this field to the slope in the intra-frequency idle handoff inequality criterion (see 2.6.2.1.4.1). The base station shall set this field as an unsigned binary number.

If the INTRA_FREQ_HO_SLOPE_INCL field is set to '0', then this field shall be omitted.

INTER_FREQ_HO_HYS_INCL - Inter-frequency idle handoff hysteresis included.

The base station shall set this field to '1' if the message includes inter-frequency idle handoff hysteresis information. Otherwise, this field shall be set to '0'.

INTER_FREQ_HO_HYS - Inter-frequency idle handoff hysteresis.

If the INTER_FREQ_HO_HYS_INCL field is set to '1', then the base station shall set this field to the inter-frequency idle handoff hysteresis value in units of dB (see 2.6.2.1.4.1), expressed as an unsigned binary number.

If the INTER_FREQ_HO_HYS_INCL field is set to '0', then this field shall be omitted.

INTER_FREQ_HO_SLOPE_INCL - Inter-frequency idle handoff slope included.

The base station shall set this field to '1' if the message includes inter-frequency idle handoff slope information. Otherwise, this field shall be set to '0'. This field shall not be set to '1' if INTER_FREQ_HO_HYS_INCL field is not set to '1'.

INTER_FREQ_HO_SLOPE - Inter-frequency idle handoff slope.

If the INTER_FREQ_HO_SLOPE_INCL field is set to '1', then the base station shall set this field to the slope in the inter-frequency idle handoff inequality criterion (see 2.6.2.1.4.1). The base station shall set this field as an unsigned binary number.

If the INTER_FREQ_HO_SLOPE_INCL field is set to '0', then this field shall be omitted.

INTER_FREQ_SRCH_TH_INCL - Inter-frequency idle search threshold included.

The base station shall set this field to '1' if the message includes inter-frequency idle search threshold information. Otherwise, this field shall be set to '0'.

INTER_FREQ_SRCH_TH - Inter-frequency idle search threshold.

If the INTER_FREQ_SRCH_TH_INCL field is set to '1', then the base station shall set this field to the inter-frequency idle search threshold value (see 2.6.2.1.4.1) in 0.5 dB decrements as specified in Table 3.7.2.3.2.39-4.

Table 3.7.2.3.2.39-4. Inter-frequency Search Threshold

INTER_FREQ_SRCH_TH	Inter-frequency search threshold
'00000'	0 dB
'00001'	- 0.5 dB
'00010'	- 1 dB
...	...
'11110'	- 15 dB
'11111'	- 15.5dB

If the INTER_FREQ_SRCH_TH_INCL field is set to '0', then this field shall be omitted.

RESERVED - Reserved bits.

This field shall contain the number of bits required to make the entire LOC_REC field an integer number of octets in length. All bits of this field shall be set to zeros.

3.7.2.3.2.40 Access Point Identification Text Message

MSG_TAG: APTIDM

Field	Length (bits)
PILOT_PN	9
CONFIG_MSG_SEQ	6
AP_ID_TEXT_LEN	8
One occurrence of the following AP_ ID_TEXT field	
AP_ID_TEXT	8 x AP_ID_TEXT_LEN

PILOT_PN - Pilot PN sequence offset index.

The base station shall set this field to the pilot PN sequence offset for this base station, in units of 64 PN chips.

CONFIG_MSG_SEQ - Configuration message sequence number.

The base station shall set this field to CONFIG_SEQ (see 3.6.2.2).

AP_ID_TEXT_LEN - Access Point Identification Text length.

The base station shall set this field to the number of octets in the AP_ID_TEXT field following the AP_ID_TEXT_LEN field.

AP_ID_TEXT - Access Point Identification Text.

The AP_ID_TEXT field shall include the following sub-fields:

MSG_ENCODING	5
NUM_FIELDS	8
NUM_FIELDS occurrences of the following field	
{	
CHARi	Variable – see [30]
}	
Reserved	0-7

MSG_ENCODING - Message encoding.

See [30].

Support of an encoding method does not imply that the entire encodable character set needs to be supported. In general, once the supported character set is determined, various subsets of the character set can be supported. If a message is comprised entirely of characters from a supported subset of a character set, it can be displayed. If a message contains an unsupported character of a character set, it can be discarded.

NUM_FIELDS - Number of fields.

If the MSG_ENCODING field is set to '00101' (Shift-JIS) or '00110' (Korean), this field indicates the total length in bytes of the CHARi field; otherwise this field shall be set to the number of characters included in this occurrence of the encoding-specific-fields.

CHARi - Character.

NUM_FIELDS occurrences of this field shall be included. The base station shall set each occurrence of this field to represent the character string that identifies this base station. The character string shall be included in the order of appearance.

RESERVED - Reserved bits.

This field shall contain the number of bits required to make the entire AP_ID_TEXT field an integer number of octets in length. All bits of this field shall be set to zeros.

3.7.2.3.2.41 Access Point Pilot Information Message

MSG_TAG: APPIM

Field	Length (bits)
PILOT_PN	9
CONFIG_MSG_SEQ	6
LIFETIME	16
NUM_APPI_REC	9
NUM_APPI_REC occurrences of the following record:	
APPI_REC	Variable

PILOT_PN - Pilot PN sequence offset index.

The base station shall set this field to the pilot PN sequence offset for this base station, in units of 64 PN chips.

CONFIG_MSG_SEQ - Configuration message sequence number.

The base station shall set this field to CONFIG_SEQ (see 3.6.2.2).

LIFETIME - Lifetime of the access point pilot information

The base station shall set this field to the duration (in minutes) that the information in this message remains valid at the mobile station if the mobile station does not receive another Access Point Pilot Information message.

NUM_APPI_REC - Number of access point pilot information record.

The base station shall set this field based on the number of access point pilot information record included in this message.

The base station shall include NUM_APPI_REC occurrences of the following APPI_REC record.

AP_ASSN_TYPE	3
AP_SID_SAME_AS_PREVIOUS	1
AP_NID_SAME_AS_PREVIOUS	1
AP_BAND_SAME_AS_PREVIOUS	1
AP_FREQ_SAME_AS_PREVIOUS	1
AP_PN_REC_SAME_AS_PREVIOUS	1
AP_SID	0 or 15
AP_NID	0 or 16
AP_BAND	0 or 5
AP_FREQ	0 or 11
AP_PN_REC_TYPE	0 or 3
AP_PN_REC_LEN	0 or 5
AP_PN_REC	0 or 8 x AP_PN_REC_LEN
RESERVED	0 – 7 (as needed)

AP_ASSN_TYPE - Access point association type.

The base station shall set this field to association type of the access points listed in APPI_REC according to Table 3.7.2.3.2.41-1.

Table 3.7.2.3.2.41-1. Access Point Association Type Field

Value (binary)	Access Point Association Type
000	The base station allows any mobile stations to register and receive any services available at the base station.
001	The base station only allows any mobile stations to register and receive page on the base station.
010	The base station only allows selected mobile stations to register and only provides services to the selected mobile stations.
011-110	Reserved.
111	There is no designated association type corresponding to access points in this APPI_REC record.

AP_SID_SAME_AS_PREVIOUS - The base station shall set this field to '1' if the system identification value associated with this record is identical to the system identification value in the previous record. Otherwise, the base station shall set this field to '0'.

AP_NID_SAME_AS_PREVIOUS - The base station shall set this field to '1' if the network identification value associated with this record is identical to the system identification value in the previous record. Otherwise, the base station shall set this field to '0'.

AP_BAND_SAME_AS_PREVIOUS -

The base station shall set this field to '1' if the band class value associated with this record is identical to the band class value in the previous record. Otherwise, the base station shall set this field to '0'.

AP_FREQ_SAME_AS_PREVIOUS -

The base station shall set this field to '1' if the CDMA Channel number associated with this record is identical to the CDMA Channel number in the previous record. Otherwise, the base station shall set this field to '0'.

AP_PN_SAME_AS_PREVIOUS –

The base station shall set this field to '1' if the list of PN Offsets associated with this record is identical to the list of PN Offsets associated with the previous record. Otherwise, the base station shall set this field to '0'.

AP_SID - Access Point System identification.

The base station shall omit this field if the AP_SID_SAME_AS_PREVIOUS field is set to '1'. Otherwise, the base station shall set this field to the system identification number (see 2.6.5.2) that the following pilot information applies to.

AP_NID - Access Point Network identification.

This field serves as a sub-identifier of a system as defined by the owner of the SID.

The base station shall omit this field if the AP_NID_SAME_AS_PREVIOUS field is set to '1'. Otherwise, the base station shall set this field to the network identification number (see 2.6.5.2) that the following pilot information applies to.

AP_BAND - Access Point Band class.

The base station shall omit this field if the AP_BAND_SAME_AS_PREVIOUS field is set to '1'. Otherwise, the base station shall set this field according to the band class, as defined in [38], of access points listed in this record.

AP_FREQ - Access Point Frequency assignment.

The base station shall omit this field if the AP_FREQ_SAME_AS_PREVIOUS field is set to '1'. Otherwise, the base station shall set this field to the CDMA Channel number corresponding to the CDMA frequency assignment corresponding to the access points listed in this record.

AP_PN_REC_TYPE - Access Point PN Record Type.

The base station shall omit this field if the AP_PN_REC_SAME_AS_PREVIOUS field is set to '1'. Otherwise, the base station shall set this field according to the AP_PN_REC field including in this record.

AP_PN_REC_LEN - Access Point PN Record Length.

The base station shall omit this field if the AP_PN_REC_SAME_AS_PREVIOUS field is set to '1'. Otherwise, the base station shall set this field to the number of octets in the AP_PN_REC field following this field.

AP_PN_REC - Access Point PN Record.

The base station shall omit this field if the AP_PN_REC_SAME_AS_PREVIOUS field is set to '1'. Otherwise, the base station shall set this field as follow.

If the AP_PN_REC_TYPE field is set to '000', then this field shall be set as

AP_PN_COUNT	7

AP_PN_COUNT occurrences of the following field:

AP_PN	9

AP_PN_COUNT - Access Point PN Count.

The base station shall set this field to the number of AP_PN fields in this record following this field.

AP_PN - Access point pilot PN sequence offset index.

The base station shall set this field to the pilot PN sequence offset allocated for access points in this area, in units of 64 PN chips.

If the AP_PN_REC_TYPE field is set to '001', then this field shall be set as

AP_PN_COUNT	8
AP_PN_START	9
AP_PN_INC	4

AP_PN_COUNT - Access Point PN Count.

The base station shall set this field to the number of pilot PN sequence offset in the series listed in this record.

AP_PN_START - Access point pilot PN sequence offset index.

The base station shall set this field to the smallest pilot PN sequence offset, in units of 64 PN chips, in the series listed in this record allocated for access points in this area.

AP_PN_INC - Access Point Pilot PN sequence offset index increment.

The base station shall set this field to the pilot PN sequence increment, in units of 64 PN chips, that such that the pilot PN sequence offsets in the series allocated to the access points in this area are: AP_PN_START + (k x PILOT_INC) where k = 0, …, AP_PN_COUNT – 1.

RESERVED - Reserved bits.

The base station shall add reserved bits as needed in order to make the total length of the APPI_REC through this RESERVED field equal to an integer number of octets. The base station shall set these bits to ‘0’.

3.7.2.3.2.42 General Overhead Information Message

MSG_TAG: GOIM

Field	Length (bits)
PILOT_PN	9
CONFIG_MSG_SEQ	6
NUM_GOI_REC	4

NUM_GOI_REC occurrences of the following fields

{

GOI_REC_TYPE	8
GOI_REC_LEN	8
GOI_REC	8 x GOI_REC_LEN

}

PILOT_PN - Pilot PN sequence offset index.

The base station shall set this field to the pilot PN sequence offset for this base station, in units of 64 PN chips.

CONFIG_MSG_SEQ - Configuration message sequence number.

The base station shall set this field to CONFIG_SEQ (see 3.6.2.2).

NUM_GOI_REC - Number of GOI records included in this message.

The base station shall set this field to the number of *General Overhead Information Message* records included in this message. The base station shall include atleast one General Overhead Information record in this message.

GOI_REC_TYPE - GOI record type.

The base station shall set this field to the type of the *General Overhead Information Message* record according to table 3.7.2.3.2.42-1 and [30][12].

[12] Further record types may be defined in [30].

Table 3.7.2.3.2.42-1. General Overhead Information Record Type Field

Value (binary)	Record Type Description
00000000	The base station shall include the operator name in this record.
00000001	The base station shall include the cell name in this record[13].
00000010 - 11111111	Reserved.

GOI_REC_LEN - The length of the GOI record length.

The base station shall set this field to the number of octets in the GOI_REC field following the GOI_REC_LEN.

GOI_REC - General Overhead Information record.

If the GOI_REC_TYPE is set to '00000000' or '00000001', the GOI_REC field shall include the following fields[14]:

MSG_ENCODING	5
NUM_FIELDS	8
NUM_FIELDS occurrences of the following field	
{	
CHARi	Variable – see [30]
}	
Reserved	0-7

MSG_ENCODING - Message encoding.

See [30].

Support of an encoding method does not imply that the entire encodable character set needs to be supported. In general, once the supported character set is determined, various subsets of the character set can be supported. If a message is comprised entirely of characters from a supported subset of a character set, it can be displayed. If a message contains an unsupported character of a character set, it can be discarded.

NUM_FIELDS - Number of fields.

[13] For example, the base station may include a text string identifying the region.

[14] Future GOI records may be defined in [30].

If the MSG_ENCODING field is set to ‘00101’ (Shift-JIS) or ‘00110’ (Korean), this field indicates the total length in bytes of the CHARi field; otherwise this field shall be set to the number of characters included in this occurrence of the encoding-specific-fields.

CHARi - Character.

NUM_FIELDS occurrences of this field shall be included. The base station shall set each occurrence of this field to represent the character string that identifies this base station. The character string shall be included in the order of appearance.

RESERVED - Reserved bits.

This field shall contain the number of bits required to make the entire GOI_REC field an integer number of octets in length. All bits of this field shall be set to zeros.

3.7.2.3.2.43 Flex Duplex CDMA Channel List Message

MSG_TAG: FDCCLM

Field	Length (bits)
PILOT_PN	9
CONFIG_MSG_SEQ	6
CAND_BAND_INFO_REQ	1
RC_QPCH_SEL_INCL	1
TD_SEL_INCL	1
CDMA_FREQ_WEIGHT_INCL	1
NUM_CAND_BAND_CLASS	3

*{ (*NUM_CAND_BAND_CLASS *+ 1)*

CAND_BAND_CLASS	5
SUBCLASS_INFO_INCL	0 or 1
SUBCLASS_REC_LEN	0 or 5

SUBCLASS_REC_LEN + 1 occurrences of the following subrecord:

{ (SUBCLASS_REC_LEN + 1)

BAND_SUBCLASS_IND	1

} (SUBCLASS_REC_LEN + 1)

TD_MODE	0 or 2
BYPASS_SYS_DET_IND	1
NUM_FREQ	4

NUM_FREQ occurrences of the following field:

{ (NUM_FREQ)

CDMA_FREQ	11
REMAINING_FIELD_INCL	1
REV_CDMA_FREQ	0 or 11
RC_QPCH_HASH_IND	0 or 1
TD_HASH_IND	0 or 1
TD_POWER_LEVEL	0 or 2
CDMA_FREQ_WEIGHT	0 or 3

} (NUM_FREQ)

*} (*NUM_CAND_BAND_CLASS *+ 1)*

PILOT_PN - Pilot PN sequence offset index.

The base station shall set this field to the pilot PN sequence offset for this base station, in units of 64 PN chips.

CONFIG_MSG_SEQ - Configuration message sequence number.

The base station shall set this field to CONFIG_SEQ (see 3.6.2.2).

CAND_BAND_INFO_REQ - Candidate band class information request indicator

The base station shall set this field to '1' when requesting mobiles to report whether various candidate band class and band subclass (if applicable) combinations are supported; otherwise, the base station shall set this field to '0'.

The base station shall not include more than 16 band class-band subclass queries in this message.

RC_QPCH_SEL_INCL - RC and QPCH Selection included indicator

The base station shall set this field to '1' if RC_QPCH_HASH_IND field are included; otherwise, it shall set this field to '0'.

If the base station sets this field to '1', the base station shall set the RC_QPCH_HASH_IND field to '1' in at least one of the records.

TD_SEL_INCL - Transmit diversity selection indicator included.

If the base station includes transmit diversity selection information in this message it shall set this field to '1'; otherwise, the base station shall set this field to '0'.

When the *Flex Duplex CDMA Channel List Message* is sent on the Paging Channel, the base station shall set this field to '0'.

CDMA_FREQ_WEIGHT_INCL- CDMA frequency weight included indicator

The base station shall set this field to '1' if the CDMA_FREQ_WEIGHT fields are included in this message; otherwise, it shall set this field to '0'.

NUM_CAND_BAND_CLASS - Number of candidate band classes

The base station shall set this field to the number of candidate band classes included in the record minus one.

The base station shall include NUM_CAND_BAND_CLASS + 1 occurrences of the following record:

CAND_BAND_CLASS - Candidate band class

The base station shall set this field (see [30]) to a band class for which the mobile is to report it's capabilities upon system access. It may be used in conjunction with the BAND_SUBCLASS_IND fields to specify band subclass(es) for which the mobile is to report it's capabilities upon system access.

SUBCLASS_INFO_INCL - Band subclass information included

The base station shall omit this field if CAND_BAND_INFO_REQ is set to '0'. Otherwise the base station shall set this field as follows:

The base station shall set this field to '0' when no band subclasses are associated with CAND_BAND_CLASS or if the base station requires only the band class capabilities of the mobile station. Otherwise, the base station shall set this field to '1'.

SUBCLASS_REC_LEN - Band subclass subrecord length

If SUBCLASS_INFO_INCL is set to '0', the base station shall omit this field; otherwise, the base station shall set this field as follows:

The base station shall set this field to the number of band subclass indicator fields included in the subrecord minus one. The number of subclass indicator fields included depends on the highest band subclass being queried for mobile support for the associated CAND_BAND_CLASS (i.e. if the highest band subclass being queried is K, then SUBCLASS_REC_LEN = K).

If the SUBCLASS_REC_LEN field is included, the base station shall include SUBCLASS_REC_LEN +1 occurrences of the following subrecord. The first field included corresponds to band subclass '0' and the Nth field included corresponds to band subclass 'N-1'.

BAND_SUBCLASS_IND - Band subclass indicator

The base station shall set this field to '1' if it requires the mobile to report whether it supports this band subclass for the associated CAND_BAND_CLASS; otherwise, the base station shall set this field to '0'.

The mobile station is to indicate its capability to support the candidate band class and band subclass (if applicable) combination in the General Extension Message that carries a *Registration Message*, *Origination Message*, or a *Page Response Message* and a Supported Band Class - Subclass record.

TD_MODE - Transmit Diversity Mode.

If TD_SEL_INCL is set to '0', the base station shall omit this field; otherwise, the base station shall include this field and set it as follows:

The base station shall set this field to the Transmit Diversity mode on the CAND_BAND_CLASS, as specified in Table 3.7.2.3.2.26-3.

BYPASS_SYS_DET_IND - Direct to idle allowed indicator.

The base station shall set this field to '1' if the mobile station is allowed to go directly to idle state on any CDMA channel belonging to the CAND_BAND_CLASS included in this record.

NUM_FREQ - Number of additional CDMA Frequencies

The base station shall set this field to the number of occurrences of the CDMA_FREQ field included herafter in this record.

The base station shall include NUM_FREQ occurrences of the following record:

CDMA_FREQ - CDMA Channel frequency assignment.

Each occurrence of this field shall correspond to a CDMA Channel containing a Paging Channel that is supported by this base station.

If this message is sent on the Paging Channel:

The base station shall set this field to the CDMA channel number corresponding to the CDMA frequency assignment for a CDMA Channel containing a Paging Channel (see [2]).

This CDMA channel shall reside in the band class listed in this CAND_BAND_CLASS record. If SUBCLASS_INFO_INCL is equal to '1', this CDMA channel shall also reside in at least one supported CDMA_SUBCLASS included in this CAND_BAND_CLASS record.

If this message is sent on the Primary Broadcast Control Channel:

The base station shall set this field to the CDMA Channel number corresponding to the CDMA frequency assignment for a CDMA Channel containing a Primary Broadcast Control Channel and Forward Common Control Channel (see [2]).

This CDMA channel resides in the band class listed in this CAND_BAND_CLASS record. If SUBCLASS_INFO_INCL is equal to '1', this CDMA channel shall also reside in at least one supported CDMA_SUBCLASS included in this CAND_BAND_CLASS record.

If the base station supports a CDMA frequency assignment without transmit diversity, the base station should not set the first occurrence of this field to a CDMA channel number corresponding to a transmit diversity frequency assignment.

REMAINING_FIELD_INCL - Remaining fields included.

If the base station is sending *Extended CDMA Channel List Message* that includes this CDMA_FREQ and CAND_BAND_CLASS, the base station shall set this bit to ‘0’. Otherwise, the base station shall set bit to ‘1’

REV_CDMA_FREQ - If REMAINING_FIELD_INCL is set to ‘0’, the base station shall omit this field. Otherwise,the base station shall set this field to the CDMA channel number corresponding to the CDMA frequency assignment for the Reverse CDMA Channel (see [2]) that is paired with the CDMA_FREQ contained in this record.

This Reverse CDMA channel resides in the band class listed in this CAND_BAND_CLASS record. If SUBCLASS_INFO_INCL is equal to ‘1’, this CDMA channel shall also reside in at least one supported CDMA_SUBCLASS included in this CAND_BAND_CLASS record.

RC_QPCH_HASH_IND - RC QPCH channel hashing indicator

If REMAINING_FIELD_INCL is set to '0' or if RC_QPCH_SEL_INCL is set to ‘0’, the base station shall omit this field; otherwise, the base station shall include this field and set it as follows:

The base station shall set this field to ‘1’, if the corresponding CDMA channel is to be selected for channel hashing by mobile stations capable of Radio Configurations greater than two or capable of supporting Quick Paging Channel.

TD_HASH_IND - Transmit diversity hash indicator.

If REMAINING_FIELD_INCL is set to ‘0’ or if TD_SEL_INCL is set to ‘0’, the base station shall omit this field; otherwise, the base station shall include this field and set it as follows:

If the associated CDMA_FREQ is to be selected for CDMA channel hashing by mobile stations capable of supporting transmit diversity [TD_MODE], the base station shall set the field to ‘1’; otherwise, the base station shall set this field to ‘0’.

TD_POWER_LEVEL - Transmit diversity power level.

If REMAINING_FIELD_INCL is set to ‘0’, or if TD_HASH_IND is set to ‘0’, the base station shall omit this field; otherwise, the base station shall include this field and set it to the transmit diversity transmission power level relative to that of the Forward Pilot Channel, as specified in Table 3.7.2.3.2.26-4.

CDMA_FREQ_WEIGHT - CDMA frequency weight

If REMAINING_FIELD_INCL is set to ‘0’ or if CDMA_FREQ_WEIGHT_INCL is set to ‘0’, the base station shall omit this field; otherwise, the base station shall include this field and set it as follows:

The base station shall set this field to one less than the weight for this CDMA channel to be used in channel hashing by the mobile station.

3.7.2.3.2.44 General Extension Message

MSG_TAG: GEM

Field	Length (bits)
NUM_GE_REC	8

NUM_GE_REC occurrences of the following record:

{ (NUM_* GE_REC)*

GE_REC_TYPE	8
GE_REC_LEN	8
GE_REC	8 x GE_REC_LEN

} (NUM_GE_REC)

MESSAGE_TYPE	8
MESSAGE_REC	variable

NUM_GE_REC - Number of General Extension Records included in this message.

The base station shall set this field to the number of general extension records included in this message. Base station shall set this field to a value greater than 0.

GE_REC_TYPE - Type of General Extension Record.

The base station shall set this field based on the type of record as specified in Table 3.7.2.3.2.40-1.

Table 3.7.2.3.2.40-1. General Extension Record Type values

GE_REC_TYPE (binary)	Description
00000000	Reverse Channel Information.
00000001	Radio Configuration Parameters Record[15]
00000010-11111111	Reserved

GE_REC_LEN - Length of the General Extension Record.

[15] Base station may use this record to extend CAM/ECAM/MECAM or UHDM/GHDM/EHDM/MUHDM messages instead of sending a RCPM message separately to the mobile station.

The base station shall set this field to the length in octets of the general extension record following the GE_REC_LEN field.

GE_REC - General Extension Record.

The base station shall set this field according to the previous occurrence of the GE_REC_TYPE in this message.

If the GE_REC_TYPE is set to '00000000' then the base station shall set the GE_REC to the following:

BAND_CLASS	5
REV_CHAN	11

BAND_CLASS - Band Class of the Reverse Channel.

The base station shall set this this field to the Band Class of the Reverse CDMA channel as specified in [30].

REV_CHAN - Channel number of the reverse link frequency.

The base station shall set this this field to the CDMA channel number corresponding to the CDMA frequency assignment for the reverse CDMA channel (see [2]) that is paired with the forward CDMA channel included in message carried in the General Extension Message.

If the GE_REC_TYPE is set to '00000001' then the base station shall set the GE_REC to the fields of the Radio Configuration Parameters Message defined in 3.7.3.3.2.51; followed by a variable length RESERVED field to make length of the entire GE_REC record an integer number of octets, with all bits of the RESERVED field set to 0.

MESSAGE_TYPE - Message type of the message included in the General Extension Message.

This field shall contain the message type value for the message following this field. When transmitting the general extension message over f-csch, then base station shall set the first 2 MSB of this field to '00'. The base station shall set this field according to [4].

MESSAGE_REC - Message extended through the General Extension message.

The base station shall set this field to the message that is being extended using the *General Extension Message*.

3.7.2.3.2.45 Alternative Technologies Information Message

MSG_TAG: ATIM

Field	Length (bits)
PILOT_PN	9
CONFIG_MSG_SEQ	6
NUM_RADIO_INTERFACE	4

NUM_RADIO_INTERFACE occurrences of the following Radio Interface record:

{ (NUM_RADIO_INTERFACE)

RADIO_INTERFACE_TYPE	4
RADIO_INTERFACE_LEN	10
Radio Interface Type-specific fields	8 x RADIO_INTERFACE_LEN

} (NUM_RADIO_INTERFACE)

PILOT_PN - Pilot PN sequence offset index.

The base station shall set this field to the pilot PN sequence offset for this base station, in units of 64 PN chips.

CONFIG_MSG_SEQ - Configuration message sequence number.

The base station shall set this field to CONFIG_SEQ (see 3.6.2.2 of [2]).

NUM_RADIO_INTERFACE - Number of radio interface types.

The base station shall set this field to the number of radio interface type records included in this message.

The base station shall include NUM_RADIO_INTERFACE occurrences of the following record, one occurrence for each radio interface type is included in this message.

RADIO_INTERFACE_TYPE - The radio interface type.

The base station shall set this field to the radio interface type of this record as specified in Table 3.5-1[16].

[16] New RADIO_INTERFACE_TYPE values may be defined in [30].

Table 3.5-1. Radio Interface Type

RADIO_INTERFACE_TYPE (binary)	Descriptions
0010	HRPD
0011	E-UTRAN
0100	WiMAX
Other	Reserved

RADIO_INTERFACE_LEN - The length of the Radio Interface Type-specific fields.

The base station shall set this field to the number of octets in the Radio Interface Type-specific fields of this record.

If RADIO_INTERFACE_TYPE is equal to '0010', the base station may include the following radio interface type-specific fields:

{ (COMMON RECORD)

COMMON_RECORD_LEN	4
SUBNET_COLOR_CODE_INCL	1
SUBNET_COLOR_CODE	0 or 8
COMMON_RECORD_RESERVED	0 ~ 7 (as needed)

} (COMMON RECORD)

NUM_HRPD_NGHBR	6
HRPD_NGHBR_REC_LEN	5

NUM_HRPD_NGHBR occurrences of the following subrecord:

{ (NUM_HRPD_NGHBR)

NGHBR_PN	9
NGHBR_FREQ_SAME_AS_PREV	1
NGHBR_BAND	0 or 5
NGHBR_FREQ	0 or 11
PN_ASSOCIATION_IND	1
DATA_ASSOCIATION_IND	1
NGHBR_SUBNET_COLOR_CODE_IND	2
NGHBR_SUBNET_COLOR_CODE	0 or 8
HRPD_NGHBR_REC_RESERVED	0-7 (as needed)

} (NUM_HRPD_NGHBR)

COMMON_RECORD_LEN - Length of the common record part.

The base station shall set this field to one less than the length of the common record in octets, including this field.

SUBNET_COLOR_CODE_INCL - HRPD Subnet Color Code Included Indicator.

If the Subnet Color Code (see [1]) associated with the HRPD sector corresponding to this pilot is included in this message, the base station shall set this field to '1'; otherwise, the base station shall set this field to '0'.

SUBNET_COLOR_CODE - HRPD Subnet Color Code.

If the SUBNET_COLOR_CODE_INCL field is set to '0', the base station shall omit this field; otherwise, the base station shall include this field and set it as follows:

The base station shall set this field to Subnet Color Code (see [1]) associated with the HRPD sector corresponding to this pilot.

COMMON_RECORD_RESERVED - Common record part reserved bits.

The base station shall add reserved bits as needed in order to make the length of the common record equal to an integer number of octets. The base station shall set these bits to '0'.

NUM_HRPD_NGHBR - Number of HRPD neighbor pilot PN sequences.

The base station shall set this field to the number of HRPD neighbors included in the message.

HRPD_NGHBR_REC_LEN - HRPD neighbor record length

The base station shall set this field to one less than the number of octets included in each HRPD neighbor records.

The base station shall include one occurrence of the following subrecord for each pilot that a mobile station is to place in its HRPD Neighbor Set.

NGHBR_PN - Neighbor pilot PN sequence offset index.

The base station shall set this field to the pilot PN sequence offset for this neighbor, in units of 64 PN chips.

NGHBR_FREQ_SAME_AS_PREV - Neighbor frequency information is same as previous indicator.

The base station shall set this field to '1' if the neighbor frequency information for this record is the same as the neighbor frequency information for the previous record included in this message; otherwise, the base station shall set this field to '0'.

NGHBR_BAND - Neighbor band class.

If the NGHBR_FREQ_SAME_AS_PREV field is set to '1', the base station shall omit this field; otherwise, the base station shall include this field and set it as follows:

The base station shall set this field to the CDMA band class, as specified in [5], corresponding to the CDMA frequency assignment for the CDMA Channel containing this neighbor.

NGHBR_FREQ - Neighbor frequency assignment.

If the NGHBR_FREQ_SAME_AS_PREV field is set to '1', the base station shall omit this field; otherwise, the base station shall include this field and set it as follows:

The base station shall set this field to the CDMA Channel number, in the specified CDMA band class, corresponding to the CDMA frequency assignment for this neighbor.

PN_ASSOCIATION_IND - Neighbor PN association indicator.

The base station shall set this field to ‘1’ if the system identified by this system record has the same PN assignment as the MC system to which this base station belongs; otherwise, the base station shall set this field to ‘0’.

DATA_ASSOCIATION_IND - Neighbor data association indicator.

The base station shall set this field to ‘1’ if the system identified by this system record can reach the same set of PDSNs as the MC system to which this base station belongs; otherwise, the base station shall set this field to ‘0’.

NGHBR_SUBNET_COLOR_CODE_IND - Neighbor HRPD Subnet Color Code Indicator.

If the Subnet Color Code (see [1]) information for this neighbor is not included, the base station shall set this field to ‘00’.

If the Subnet Color Code information for this neighbor is included and is the same value as included in the SUBNET_COLOR_CODE field above, the base station shall set this field to ‘01’.

If the Subnet Color Code (see [1]) information for this neighbor is included below, the base station shall set this field to ‘10’.

NGHBR_SUBNET_COLOR_CODE - Neighbor HRPD Subnet Color Code.

If the NGHBR_SUBNET_COLOR_CODE_IND field is not set to ‘10’, the base station shall omit this field; otherwise, the base station shall include this field and set it as follows:

The base station shall set this field to the Subnet Color Code (see [1]) for this neighbor.

HRPD_NGHBR_REC_RESERVED - HRPD neighbor record reserved bits.

The base station shall add reserved bits as needed in order to make the length of this record equal to an integer number of octets. The base station shall set these bits to ‘0’.

If RADIO_INTERFACE_TYPE is equal to ‘0011’, the base station may include the radio interface type-specific fields specified in [49].

If RADIO_INTERFACE_TYPE is equal to ‘0100’, the base station may include the radio interface type-specific fields specified in [50].

3.7.3 f-dsch

During Traffic Channel operation, the base station sends signaling messages to the mobile station using the f-dsch.

3.7.3.1 Reserved

3.7.3.2 Reserved

3.7.3.3 PDU Formats on the f-dsch

The signaling messages sent over the f-dsch are summarized in Table 3.7.3.3-1.

Table 3.7.3.3-1. f-dsch Messages

Message Name	MSG_TAG	Section Number	P_REV_IN_USE[17]
Order Message	ORDRM	3.7.3.3.2.1	All
Authentication Challenge Message	AUCM	3.7.3.3.2.2	All
Alert With Information Message	AWIM	3.7.3.3.2.3	All
Data Burst Message	DBM	3.7.3.3.2.4	All
Reserved (Previously: *Analog Handoff Direction Message)*		3.7.3.3.2.6	
In-Traffic System Parameters Message	ITSPM	3.7.3.3.2.7	All
Neighbor List Update Message	NLUM	3.7.3.3.2.8	< 8
Send Burst DTMF Message	BDTMFM	3.7.3.3.2.9	All
Power Control Parameters Message	PCNPM	3.7.3.3.2.10	All
Retrieve Parameters Message	RTPM	3.7.3.3.2.11	All
Set Parameters Message	STPM	3.7.3.3.2.12	All
SSD Update Message	SSDUM	3.7.3.3.2.13	All
Flash With Information Message	FWIM	3.7.3.3.2.14	All
Mobile Station Registered Message	MSRM	3.7.3.3.2.15	All
Status Request Message	STRQM	3.7.3.3.2.16	1, ≥ 3
Extended Handoff Direction Message	EHDM	3.7.3.3.2.17	All
Service Request Message	SRQM	3.7.3.3.2.18	1, ≥ 3
Service Response Message	SRPM	3.7.3.3.2.19	1, ≥ 3
Service Connect Message	SCM	3.7.3.3.2.20	1, ≥ 3
Service Option Control Message	SOCM	3.7.3.3.2.21	1, ≥ 3
TMSI Assignment Message	TASM	3.7.3.3.2.22	1, ≥ 4
Service Redirection Message	SRDM	3.7.3.3.2.23	≥ 4
Supplemental Channel Assignment Message	SCAM	3.7.3.3.2.24	≥ 4
Power Control Message	PCNM	3.7.3.3.2.25	≥ 4

[17] P_REV_IN_USE equal to “All” implies all values applicable to the Band Class.

Message Name	MSG_TAG	Section Number	P_REV_IN_USE
Extended Neighbor List Update Message	ENLUM	3.7.3.3.2.26	≥ 4
Candidate Frequency Search Request Message	CFSRQM	3.7.3.3.2.27	≥ 4
Candidate Frequency Search Control Message	CFSCNM	3.7.3.3.2.28	≥ 4
Power Up Function Message	PUFM	3.7.3.3.2.29	≥ 4
Power Up Function Completion Message	PUFCM	3.7.3.3.2.30	≥ 4
General Handoff Direction Message	GHDM	3.7.3.3.2.31	≥ 4
Resource Allocation Message	RAM	3.7.3.3.2.32	≥ 6
Resource Allocation Mini Message	RAMM	3.7.3.3.2.33	≥ 6
Extended Release Message	ERM	3.7.3.3.2.34	≥ 6
Extended Release Mini Message	ERMM	3.7.3.3.2.35	≥ 6
Universal Handoff Direction Message	UHDM	3.7.3.3.2.36	≥ 6
Extended Supplemental Channel Assignment Message	ESCAM	3.7.3.3.2.37	≥ 6
Forward Supplemental Channel Assignment Mini Message	FSCAMM	3.7.3.3.2.38	≥ 6
Reverse Supplemental Channel Assignment Mini Message	RSCAMM	3.7.3.3.2.39	≥ 6
Mobile Assisted Burst Operation Parameters Message	MABOPM	3.7.3.3.2.40	≥ 6
User Zone Reject Message	UZRM	3.7.3.3.2.41	≥ 6
User Zone Update Message	UZUM	3.7.3.3.2.42	≥ 6
Call Assignment Message	CLAM	3.7.3.3.2.43	≥ 7
Extended Alert With Information Message	EAWIM	3.7.3.3.2.44	≥ 7
Extended Flash With Information Message	EFWIM	3.7.3.3.2.45	≥ 7
Security Mode Command Message	SMCM	3.7.3.3.2.46	≥ 7
Base Station Status Response Message	BSSRSPM	3.7.3.3.2.47	≥ 7
Authentication Request Message	AUREQM	3.7.3.3.2.48	≥ 10
Rate Change Message	RATCHGM	3.7.3.3.2.49	≥ 9
In-Traffic BCMC Service Parameters Message	ITBSPM	3.7.3.3.2.50	≥ 11
MEID Universal Handoff Direction Message	MUHDM	See [47]	≥ 6 but < 9

Message Name	MSG_TAG	Section Number	P_REV_IN_USE
Radio Configuration Parameters Message	RCPM	3.7.3.3.2.51	≥ 12
Handoff Supplementary Information Solicit Message	HOSISM	3.7.3.3.2.52	≥ 12
General Extension Message	GEM	3.7.3.3.2.53	≥ 12

3.7.3.3.1 Reserved

3.7.3.3.2 Message Body Contents

The following sections specify the contents of the message body for each message that may be sent on the f-dsch.

3.7.3.3.2.1 Order Message

MSG_TAG: ORDRM

Field	Length (bits)
USE_TIME	1
ACTION_TIME	6
ORDER	6
ADD_RECORD_LEN	3
Order-specific fields (if used)	8 × ADD_RECORD_LEN
CON_REF_INCL	0 or 1
CON_REF	0 or 8

USE_TIME - Use action time indicator.

This field indicates whether an explicit action time is specified in this order.

If an explicit action time can be specified for this order code, as shown in Table 3.7.4-1, the base station may set this field to ‘1’; otherwise, the base station shall set this field to ‘0’.

ACTION_TIME - Action time.

If the USE_TIME field is set to ‘1’, the base station shall set this field to the System Time minus $FRAME\_OFFSET_S \times 1.25$ ms, in units of 80 ms (modulo 64), at which the order is to take effect. If the USE_TIME field is set to ‘0’, the base station shall set this field to ‘000000’.

ORDER - Order code.

The base station shall set this field to the ORDER code for this type of *Order Message* (see 3.7.4).

ADD_RECORD_LEN - Additional record length.

The base station shall set this field to the number of octets in the order-specific fields included in this message.

Order-specific fields - Order-specific fields.

The base station shall include order-specific fields as specified in 3.7.4.

CON_REF_INCL – Connection reference included indicator.

If the order carried by this message is not a Call Control order

(see 3.6.8), the base station shall omit this field; otherwise, the base station shall include this field and set it as follows:

The base station shall set this field to '1' if the connection reference field is included in this message; otherwise, it shall set this field to '0'.

CON_REF – Connection reference.

If the CON_REF_INCL field is not included or is included but is set to '0', the base station shall omit this field; otherwise, the base station shall include this field and shall set it to the value of the connection reference assigned to the service option connection of the call, to which this message corresponds.

3.7.3.3.2.2 Authentication Challenge Message

MSG_TAG: AUCM

Field	Length (bits)
RANDU	24
GEN_CMEAKEY	1

RANDU - Random challenge data.

The base station shall set this field as specified in 2.3.12.1.4.

GEN_CMEAKEY - Generate CMEAKEY indicator.

The base station shall set this field to ‘1’ if it wants the MS to generate the CMEAKEY during the Unique Challenge-Response procedure (see 2.3.12.1.4); otherwise, the base station shall set this field to ‘0’.

3.7.3.3.2.3 Alert With Information Message

MSG_TAG: AWIM

Field	**Length (bits)**
Zero or more occurrences of the following record:	
{	
RECORD_TYPE	8
RECORD_LEN	8
Type-specific fields	8 × RECORD_LEN
}	

The base station shall include occurrences of the following three-field record as specified in 3.7.5.

RECORD_TYPE - Information record type.

The base station shall set this field as specified in 3.7.5.

RECORD_LEN - Information record length.

The base station shall set this field to the number of octets in the type-specific fields included in this record.

Type-specific fields - Type-specific fields.

The base station shall include type-specific fields as specified in 3.7.5.

3.7.3.3.2.4 Data Burst Message

MSG_TAG: DBM

Field	Length (bits)
MSG_NUMBER	8
BURST_TYPE	6
NUM_MSGS	8
NUM_FIELDS	8

NUM_FIELDS occurrences of the following field:

{ (NUM_FIELDS)

CHARi	8

} (NUM_FIELDS)

MSG_NUMBER - Message number.

The base station shall set this field to the number of this message within the data burst stream.

BURST_TYPE - Data burst type.

The base station shall set the value of this field for the type of this data burst as defined in [30]. If the base station sets this field equal to '111110', it shall set the first two CHARi fields of this message equal to the EXTENDED_BURST_TYPE_INTERNATIONAL field as described in the definition of CHARi below. If the base station sets this field equal to '111111', it shall set the first two CHARi fields of this message equal to the EXTENDED_BURST_TYPE as described in the definition of CHARi below.

NUM_MSGS - Number of messages in the data burst stream.

The base station shall set this field to the number of messages in this data burst stream.

NUM_FIELDS - Number of characters in this message.

The base station shall set this field to the number of occurrences of the CHARi field included in this message.

CHARi - Character.

The base station shall include NUM_FIELDS occurrences of this field. The base station shall set these fields to the corresponding octet of the data burst stream.

If the BURST_TYPE field of this message is equal to '111110', the first two CHARi octets shall represent a 16 bit EXTENDED_BURST_TYPE_INTERNATIONAL field, which is encoded as shown below. The first ten bits of this field contain a binary mapping of the Mobile Country Code (MCC) associated with the national standards organization administering the use of the remaining octets of the message. Encoding of the MCC shall be as specified in 2.3.1.3. The remaining six bits of the EXTENDED_BURST_TYPE_INTERNATIONAL field shall specify the COUNTRY_BURST_TYPE. The base station shall set the value of the COUNTRY_BURST_TYPE according to the type of this data burst as defined in standards governed by the country where this data burst type is to be used.

Field	**Length (bits)**
Mobile Country Code	10
COUNTRY_BURST_TYPE	6
Remaining CHARi fields	8 × (NUM_FIELDS – 2)

If the BURST_TYPE field of this message is equal to '111111', the first two CHARi octets shall represent a single, 16 bit, EXTENDED_BURST_TYPE field, as shown below. The base station shall set the value of the EXTENDED_BURST_TYPE field according to the type of this data burst as defined in [30].

Field	**Length (bits)**
EXTENDED_BURST_TYPE (first two CHARi fields)	16
Remaining CHARi fields	8 × (NUM_FIELDS – 2)

3.7.3.3.2.5 Reserved

This page intentionally left blank.

3.7.3.3.2.6 Reserved

This page intentionally left blank.

3.7.3.3.2.7 In-Traffic System Parameters Message

MSG_TAG: ITSPM

Field	Length (bits)
SID	15
NID	16
SRCH_WIN_A	4
SRCH_WIN_N	4
SRCH_WIN_R	4
T_ADD	6
T_DROP	6
T_COMP	4
T_TDROP	4
NGHBR_MAX_AGE	4
P_REV	8
SOFT_SLOPE	6
ADD_INTERCEPT	6
DROP_INTERCEPT	6
PACKET_ZONE_ID	8
EXTENSION	1
T_MULCHAN	0 or 3
BEGIN_PREAMBLE	0 or 3
RESUME_PREAMBLE	0 or 3
T_SLOTTED_INCL	1
T_SLOTTED	0 or 8
ENC_SUPPORTED	1
SIG_ENCRYPT_SUP	0 or 8
UI_ENCRYPT_SUP	0 or 8

Field	Length (bits)
CS_SUPPORTED	1
CHM_SUPPORTED	1
CDMA_OFF_TIME_REP_SUP_IND	1
CDMA_OFF_TIME_REP_THRESHOLD_UNIT	0 or 1
CDMA_OFF_TIME_REP_THRESHOLD	0 or 3
T_TDROP_RANGE_INCL	1
T_TDROP_RANGE	0 or 4
FOR_PDCH_SUPPORTED	1
PDCH_CHM_SUPPORTED	0 or 1
SDB_SUPPORTED	1
MOB_QOS	0 or 1
MS_INIT_POS_LOC_SUP_IND	1
PZ_HYST_ENABLED	0 or 1
PZ_HYST_INFO_INCL	0 or 1
PZ_HYST_LIST_LEN	0 or 4
PZ_HYST_ACT_TIMER	0 or 8
PZ_HYST_TIMER_MUL	0 or 3
PZ_HYST_TIMER_EXP	0 or 5
BCMC_ON_TRAFFIC_SUP	1
AUTO_REQ_TRAF_ALLOWED_IND	0 or 1
REV_PDCH_SUPPORTED	0 or 1
MAX_ADD_SERV_INSTANCE	0 or 3
USE_CH_CFG_RRM	1

SID - System identification.

The base station shall set this field to the system identification number for this wireless system (see 2.6.5.2).

NID - Network identification.

This field serves as a sub-identifier of a system as defined by the owner of the SID.

The base station shall set this field to the network identification number for this network (see 2.6.5.2).

SRCH_WIN_A - Search window size for the Active Set and Candidate Set.

The base station shall set this field to the window size parameter shown in Table 2.6.6.2.1-1 corresponding to the number of PN chips that the mobile station is to search for pilots in the Active Set and Candidate Set.

SRCH_WIN_N - Search window size for the Neighbor Set.

The base station shall set this field to the window size parameter shown in Table 2.6.6.2.1-1 corresponding to the number of PN chips that the mobile station is to search for pilots in the Neighbor Set.

SRCH_WIN_R - Search window size for the Remaining Set.

The base station shall set this field to the window size parameter shown in Table 2.6.6.2.1-1 corresponding to the number of PN chips that the mobile station is to search for pilots in the Remaining Set.

T_ADD - Pilot detection threshold.

This value is used by the mobile station to trigger the transfer of a pilot from the Neighbor Set or Remaining Set to the Candidate Set (see 2.6.6.2.6) and to trigger the sending of the *Pilot Strength Measurement Message* or *Extended Pilot Strength Measurement Message* initiating the handoff process (see 2.6.6.2.5.2).

The base station shall set this field to the pilot detection threshold, expressed as an unsigned binary number equal to $\lfloor -2 \times 10 \times \log_{10} E_c/I_0 \rfloor$.

T_DROP - Pilot drop threshold.

This value is used by the mobile station to start a handoff drop timer for pilots in the Active Set and the Candidate Set (see 2.6.6.2.3).

The base station shall set this field to the pilot drop threshold, expressed as an unsigned binary number equal to $\lfloor -2 \times 10 \times \log_{10} E_c/I_0 \rfloor$.

T_COMP - Active Set versus Candidate Set comparison threshold.

The mobile station transmits a *Pilot Strength Measurement Message* or an *Extended Pilot Strength Measurement Message* when the strength of a pilot in the Candidate Set exceeds that of a pilot in the Active Set by this margin (see 2.6.6.2.5.2).

The base station shall set this field to the threshold Candidate Set pilot to Active Set pilot ratio, in units of 0.5 dB.

T_TDROP - Drop timer value.

Timer value after which an action is taken by the mobile station for a pilot that is a member of the Active Set or Candidate Set, and whose strength has not become greater than T_DROP. If the pilot is a member of the Active Set, a *Pilot Strength Measurement Message* or an *Extended Pilot Strength Measurement Message* is issued. If the pilot is a member of the Candidate Set, it will be moved to the Neighbor Set.

The base station shall set this field to the T_TDROP value shown in Table 2.6.6.2.3-1 corresponding to the drop timer value to be used by the mobile station.

NGHBR_MAX_AGE - Maximum age for retention of Neighbor Set members.

The mobile station drops neighbor set members whose AGE count exceeds this field.

The base station shall set this field to the Neighbor Set maximum age retention value (see 2.6.6.2.6.3).

P_REV - Protocol revision level.

The base station shall set this field to the base station protocol revision level.

SOFT_SLOPE - The slope in the inequality criterion for adding a pilot to the Active Set, or dropping a pilot from the Active Set (see 2.6.6.2.3 and 2.6.6.2.5.2).

The base station shall set this field as an unsigned binary number.

ADD_INTERCEPT - The intercept in the inequality criterion for adding a pilot to the Active Set (see 2.6.6.2.5.2).

The base station shall set this field as a two's complement signed binary number, in units of 0.5 dB.

DROP_INTERCEPT - The intercept in the inequality criterion for dropping a pilot from the Active Set (see 2.6.6.2.3).

The base station shall set this field as a two's complement signed binary number, in units of 0.5 dB.

PACKET_ZONE_ID - Packet data services zone identifier.

If the base station supports a packet data service zone, the base station shall set this field to its non-zero packet data services zone identifier.

If the base station does not support a packet data service zone, the base station shall set this field to '00000000'.

EXTENSION - Indicator that extension fields are present.

If Reverse Supplemental Code Channel or Reverse Supplemental Channel system parameters are included in this message, the base station shall set this field to '1'; otherwise, the base station shall set this field to '0'.

T_MULCHAN - *Supplemental Channel Request Message* pilot strength reporting offset.

If EXTENSION is set to ‘1’, the base station shall include this field and set this field to the threshold offset that the mobile station is to use when reporting neighbor pilot strength measurements in a *Supplemental Channel Request Message*. The mobile station is to interpret this field as an offset to T_ADD ranging from 0.5 dB (corresponding to T_MULCHAN = ‘000’) to 4.0 dB (corresponding to T_MULCHAN = ‘111’) in 0.5 dB increments.

BEGIN_PREAMBLE - Number of preamble frames on Reverse Supplemental Code Channels at the beginning of transmission on Reverse Supplemental Code Channel.

If EXTENSION is set to ‘1’, the base station shall include this field and set this field to the number of Reverse Supplemental Code Channel preamble frames that the mobile station is to send when beginning transmission on Reverse Supplemental Code Channels.

RESUME_PREAMBLE - Number of preamble frames on Reverse Supplemental Code Channels at the resumption of transmission.

If EXTENSION is set to ‘1’, the base station shall include this field and set this field to the number of Reverse Supplemental Code Channel preamble frames that the mobile station is to send when resuming transmission on a Reverse Supplemental Code Channel following an autonomous suspension of transmission on an allocated Supplemental Code Channel.

T_SLOTTED_INCL - Slotted timer value included indicator.

The base station shall set this field to ‘1’ if the slotted timer value is included; otherwise, the base station shall set this field to ‘0’.

T_SLOTTED - Slotted timer value

If T_SLOTTED_INCL is set to ‘1’, the base station shall include this field and set this field to the value of the $T_{MS\_Slotted}$ timer to be used by the mobile station in units of 80 ms; otherwise, the base station shall omit this field.

ENC_SUPPORTED – Encryption fields included.

The base station shall set this field to ‘1’ in the encryption related fields are included; otherwise the base station shall set this field to ‘0’.

SIG_ENCRYPT_SUP – Signaling Encryption supported indicator.

If ENC_SUPPORTED is equal to ‘1’, the base station shall include this field; otherwise, the base station shall omit this field. If this field is included, this field indicates which signaling encryption algorithms are supported by the base station.

This field consists of the subfields shown in Table 2.7.1.3.2.1-5.

If this field is included, the base station shall set the subfields as follows:

The base station shall set the CMEA subfield to '1'.

The base station shall set each other subfield to '1' if the corresponding signaling algorithm is supported by the base station; otherwise, the base station shall set the subfield to '0'.

The base station shall set the RESERVED subfield to '00000'.

UI_ENCRYPT_SUP – User information Encryption supported indicator.

If ENC_SUPPORTED is equal to '1', the base station shall include this field; otherwise, the base station shall omit this field. If this field is included, the base station shall set this field to indicate the supported user information encryption algorithms.

This field consists of the subfields shown in Table 2.7.1.3.2.4-9.

The base station shall set each subfield to '1' if the corresponding user information encryption algorithm is supported by the base station; otherwise, the base station shall set the subfield to '0'.

CS_SUPPORTED - Concurrent Services supported indicator.

If the base station supports concurrent services, the base station shall set this field to '1'; otherwise, the base station shall set this field to '0'.

CHM_SUPPORTED – Control Hold Mode supported indicator.

The base station shall set this field to '1' to indicate that the base station supports the Control Hold Mode; otherwise, the base station shall set this field to '0'.

CDMA_OFF_TIME_REP_SUP_IND – CDMA off time report supported indicator.

If the base station supports mobile station report for CDMA off time information using the *CDMA Off Time Report Message*, the base station shall set this field to '1'; otherwise, the base station shall set this field to '0'.

CDMA_OFF_TIME_REP_THRESHOLD_UNIT – CDMA off time report threshold unit

If CDMA_OFF_TIME_REP_SUP_IND is set to '0', the base station shall omit this field; otherwise, the base station shall include this field and set it as follows:

The base station shall set this field to the time unit used in CDMA_OFF_TIME_REP_THRESHOLD, as specified in Table 3.7.2.3.2.13-5

CDMA_OFF_TIME_REP_THRESHOLD – CDMA off time report threshold

If CDMA_OFF_TIME_REP_SUP_IND is set to ‘0’, the base station shall omit this field; otherwise, the base station shall include this field and set it as follows:

The base station shall set this field to the time in units of CDMA_OFF_TIME_REP_THRESHOLD_UNIT such that if the mobile station goes away from the CDMA traffic channel longer than this value, the mobile station is to send a *CDMA Off Time Report Message*.

T_TDROP_RANGE_INCL - Drop timer range value included indicator.

The base station shall set this field to '1' if the T_TDROP_RANGE field is included in this message; otherwise, the base station shall set this field to '0'.

T_TDROP_RANGE - Drop timer range value.

Timer range value to use in association with the T_TDROP parameter when determining the drop timer expiration.

If T_TDROP_RANGE_INCL is set to '0', the base station shall omit this field; otherwise, the base station shall set this field to the T_TDROP_RANGE value shown in Table 2.6.6.2.3-2 corresponding to the timer expiration range value to be used by the mobile station.

FOR_PDCH_SUPPORTED - Forward Packet Data Channel supported indicator.

If the base station supports Forward Packet Data Channel, the base station shall set this field to ‘1’; otherwise, the base station shall set this field to ‘0’.

PDCH_CHM_SUPPORTED – PDCH Control Hold Mode supported indicator.

If FOR_PDCH_SUPPORTED is set to ‘0’, the base station shall omit this field; otherwise, the base station shall include this field and set it as follows:

The base station shall set this field to ‘1’ to indicate that the base station supports the PDCH Control Hold Mode; otherwise, the base station shall set this field to ‘0’.

SDB_SUPPORTED - Short Data Burst supported indicator.

The base station shall set this field to ‘1’ if the mobile station is permitted to send a Short Data Burst; otherwise, the base station shall set this field to ‘0’.

MOB_QOS - Indicator granting permission to the mobile station to request QoS parameter settings in the *Origination Message*, *Origination Continuation Message*, or *Enhanced Origination Message*.

If CS_SUPPORTED is equal to ‘0’, the base station shall omit this field; otherwise the base station shall include this field and shall set it as follows:

The base station shall set this field to ‘1’, if the mobile station is allowed to include a QoS record in the *Origination Message*, *Origination Continuation Message*, or *Enhanced Origination Message*; otherwise, the base station shall set this field to ‘0’.

MS_INIT_POS_LOC_SUP_IND - Mobile station initiated position location determination supported indicator.

If the base station supports mobile station initiated position determination, the base station shall set this field to '1'; otherwise, the base station shall set this field to '0'.

PZ_HYST_ENABLED - Packet zone hysteresis enabled.

If the PACKET_ZONE_ID field is set to '00000000', the base station shall omit this field; otherwise, the base station shall include this field and set it as follows:

If the packet zone hysteresis feature is to be enabled at the mobile station, the base station shall set this field to '1'; otherwise, the base station shall set this field to '0'.

PZ_HYST_INFO_INCL - Packet zone hysteresis information included indicator.

If the PZ_HYST_ENABLED field is included and is set to '1', the base station shall include this field and set it as follows; otherwise, the base station shall omit this field.

If the base includes the PZ_HYST_LIST_LEN, PZ_HYST_ACT_TIMER and packet zone hysteresis timer related fields, the base station shall set this field to '1'; otherwise, the base station shall set this field to '0'.

PZ_HYST_LIST_LEN - Packet zone hysteresis list length.

If the PZ_HYST_INFO_INCL field is included and is set to '1', the base station shall include this field and set it as follows; otherwise, the base station shall omit this field.

The base station shall set this field to the length of the packet zone hysteresis list. This field shall be within the range '0001' through '1111', inclusive.

PZ_HYST_ACT_TIMER - Packet zone hysteresis activation timer.

If the PZ_HYST_INFO_INCL field is included and is set to '1', the base station shall include this field and set it as follows; otherwise, the base station shall omit this field.

The base station shall set to the value of the packet zone hysteresis activation timer (in units of seconds). This field shall be within the range '00000001' through '11111111', inclusive.

PZ_HYST_TIMER_MUL - Packet zone hysteresis timer multiplier.

If the PZ_HYST_INFO_INCL field is included and is set to '1', the base station shall include this field and set it as follows; otherwise, the base station shall omit this field.

The base station shall set the field to x, where $x \times 8^y$ seconds is the value of the hysteresis timer and y is the value indicated in the PZ_HYST_TIMER_EXP field. The base station shall set this field to a value that is between 1 and 7 inclusive. The value 0 is reserved.

PZ_HYST_TIMER_EXP - Packet zone hysteresis timer exponent.

If the PZ_HYST_INFO_INCL field is included and is set to ‘1’, the base station shall include this field and set it as follows; otherwise, the base station shall omit this field.

The base station shall set the field to y, where x × 8^y seconds is the value of the hysteresis timer and x is the value indicated in the PZ_HYST_TIMER_MUL field. The base station shall set this field to a value that is between 0 and 4 inclusive. All the other values are reserved.

BCMC_ON_TRAFFIC_SUP - BCMC on traffic channel supported indicator.

The base station shall set this field to ‘1’ to indicate that the BCMC feature is supported on traffic channel; otherwise, the base station shall set this field to ‘0’.

AUTO_REQ_TRAF_ALLOWED_IND - Autonomous BCMC request on traffic channel allowed indicator.

If the BCMC_ON_TRAFFIC_SUP field is set to ‘0’, the base station shall omit this field; otherwise, the base station shall include this field and set it as follows:

The base station shall set this field to ‘1’ to indicate that the mobile station is allowed to request for a BCMC flow autonomously on traffic; otherwise, the base station shall set this field to ‘0’.

REV_PDCH_SUPPORTED- Reverse Packet Data Channel supported indicator.

If FOR_PDCH_SUPPORTED is set to ‘0’, the base station shall omit this field; otherwise, the base station shall include this field and set it as follows.

If the base station supports the Reverse Packet Data Channel (R-PDCH), the base station shall set this field to ‘1’; otherwise, the base station shall set this field to ‘0’.

MAX_ADD_SERV_INSTANCE- Maximum number of additional service reference identifiers allowed in origination

If the CS_SUPPORTED field is set to ‘0’, the base station shall omit this field; otherwise, the base station shall include this field and set it as follows:

The base station shall set this field to the maximum number of additional service reference identifiers that can be included in the *Origination Message* or *Enhanced Origination Message*.

USE_CH_CFG_RRM – Channel configuration request allowed indicator.

The base station shall set this field to ‘1’ to indicate that the mobile station is permitted to include the CH_IND and EXT_CH_IND fields in the *Resource Request Message*, and the *Resource Request Mini Message*; otherwise, the base station shall set this field to ‘0’.

3.7.3.3.2.8 Neighbor List Update Message

MSG_TAG: NLUM

Field	Length (bits)
PILOT_INC	4

One or more occurrences of the following field:

{

NGHBR_PN	9

}

PILOT_INC - Pilot PN sequence offset index increment.

The mobile station searches for Remaining Set pilots at pilot PN sequence offset index values that are multiples of this value.

The base station shall set this field to the pilot PN sequence increment, in units of 64 PN chips, that the mobile station is to use for searching the Remaining Set. The base station should set this field to the largest increment such that the pilot PN sequence offsets of all its neighbor base stations are integer multiples of that increment.

NGHBR_PN - Neighbor pilot PN sequence offset index.

The base station shall include one occurrence of this field for each pilot in its neighbor list. The base station shall set this field to the pilot's PN sequence offset, in units of 64 PN chips. The base station shall include no more than 20 occurrences of this field.

3.7.3.3.2.9 Send Burst DTMF Message

MSG_TAG: BDTMFM

Field	Length (bits)
NUM_DIGITS	8
DTMF_ON_LENGTH	3
DTMF_OFF_LENGTH	3

NUM_DIGITS occurrences of the following field:

{ (NUM_DIGITS)

DIGITi	4

} (NUM_DIGITS)

CON_REF_INCL	1
CON_REF	0 or 8

NUM_DIGITS - Number of DTMF digits.

The base station shall set this field to the number of DTMF digits included in this message.

DTMF_ON_LENGTH - DTMF pulse width code.

The base station shall set this field to the DTMF_ON_LENGTH value shown in Table 2.7.2.3.2.7-1 corresponding to the requested pulse width of the DTMF pulse to be generated by the mobile station.

DTMF_OFF_LENGTH - DTMF interdigit interval code.

The base station shall set this field to the DTMF_OFF_LENGTH value shown in Table 2.7.2.3.2.7-2 corresponding to the requested minimum interdigit interval between DTMF pulses to be generated by the mobile station.

DIGITi - DTMF digit.

The base station shall include one occurrence of this field for each DTMF digit to be generated by the mobile station. The base station shall set each occurrence of this field to the code value shown in Table 2.7.1.3.2.4-4 corresponding to the dialed digit.

CON_REF_INCL – Connection reference included indicator.

The base station shall set this field to ‘1’ if the connection reference field is included in this message; otherwise, it shall set this field to ‘0’.

CON_REF – Connection reference.

If the CON_REF_INCL field is set to ‘0’, the base station shall omit this field; otherwise, the base station shall include this field and shall set it to the value of the connection reference assigned to the service option connection of the call, to which this message corresponds.

3.7.3.3.2.10 Power Control Parameters Message

MSG_TAG: PCNPM

Field	Length (bits)
PWR_REP_THRESH	5
PWR_REP_FRAMES	4
PWR_THRESH_ENABLE	1
PWR_PERIOD_ENABLE	1
PWR_REP_DELAY	5

PWR_REP_THRESH - Power control reporting threshold.

The base station shall set this field to the number of bad frames (see [2]) to be received in a measurement period on the channel which carries the Power Control Subchannel before the mobile station is to generate a *Power Measurement Report Message* (see 2.6.4.1.1). If the base station sets PWR_THRESH_ENABLE to '1', it shall not set this field to '00000'.

PWR_REP_FRAMES - Power control reporting frame count.

The base station shall set this field to the value such that the number given by

$$\lfloor 2^{(\mathrm{PWR\_REP\_FRAMES}/2)} \times 5 \rfloor \text{ frames}$$

is the number of frames over which the mobile station is to count frame errors.

PWR_THRESH_ENABLE - Threshold report mode indicator.

If the mobile station is to generate threshold *Power Measurement Report Messages*, the base station shall set this field to '1'. If the mobile station is not to generate threshold *Power Measurement Report Messages*, the base station shall set this field to '0'.

PWR_PERIOD_ENABLE - Periodic report mode indicator.

If the mobile station is to generate periodic *Power Measurement Report Messages*, the base station shall set this field to '1'. If the mobile station is not to generate periodic *Power Measurement Report Messages*, the base station shall set this field to '0'.

PWR_REP_DELAY - Power report delay.

The period that the mobile station waits following a *Power Measurement Report Message* before restarting frame counting for power control purposes.

The base station shall set this field to the power report delay value, in units of 4 frames (see 2.6.4.1.1).

3.7.3.3.2.11 Retrieve Parameters Message

MSG_TAG: RTPM

Field	Length (bits)
One or more occurrences of the following field:	
{	
PARAMETER_ID	16
}	

PARAMETER_ID - Parameter identification.

The base station can request the mobile station to report any parameter specified in Table E-1.

The base station shall include one occurrence of this field for each parameter requested. The base station shall set this field to the parameter identification number specified in Table E-1 corresponding to the parameter requested.

3.7.3.3.2.12 Set Parameters Message

MSG_TAG: STPM

Field	Length (bits)
One or more occurrences of the following record:	
{	
PARAMETER_ID	16
PARAMETER_LEN	10
PARAMETER	PARAMETER_LEN + 1
}	

The base station shall include one occurrence of the following three-field record for each parameter to be set.

PARAMETER_ID - Parameter identification.

The base station shall set this field to the identification shown in Table E-1 corresponding to the settable parameter to be set.

PARAMETER_LEN - Parameter length.

The base station shall set this field to the length shown in Table E-1 corresponding to the parameter to be set.

PARAMETER - Parameter value.

The base station shall set this field to the value of the parameter specified by the PARAMETER_ID field.

3.7.3.3.2.13 SSD Update Message

MSG_TAG: SSDUM

Field	Length (bits)
RANDSSD	56

RANDSSD - Random data.

The base station shall set this field as specified in 2.3.12.1.5.

3.7.3.3.2.14 Flash With Information Message

MSG_TAG: FWIM

Field	Length (bits)
One or more occurrences of the following record:	
{	
RECORD_TYPE	8
RECORD_LEN	8
Type-specific fields	8 × RECORD_LEN
}	

The base station shall include occurrences of the following three-field record as specified in 3.7.5.

RECORD_TYPE - Information record type.

The base station shall set this field as specified in 3.7.5.

RECORD_LEN - Information record length.

The base station shall set this field to the number of octets in the type-specific fields included in this record.

Type-specific fields - Type-specific fields.

The base station shall include type-specific fields as specified in 3.7.5.

3.7.3.3.2.15 Mobile Station Registered Message

MSG_TAG: MSRM

Field	Length (bits)
SID	15
NID	16
REG_ZONE	12
TOTAL_ZONES	3
ZONE_TIMER	3
MULT_SIDS	1
MULT_NIDS	1
BASE_LAT	22
BASE_LONG	23
REG_DIST	11

SID - System identification.

The base station shall set this field to the system identification number for this system.

NID - Network identification.

This field serves as a sub-identifier of a system as defined by the owner of the SID.

The base station shall set this field to the network identification number for this network. The NID value of 65,535 is reserved.

REG_ZONE - Registration zone.

The base station shall set this field to its registration zone number (see 2.6.5.1.5).

TOTAL_ZONES - Number of registration zones to be retained.

The base station shall set this field to the number of registration zones the mobile station is to retain for purposes of zone-based registration (see 2.6.5.1.5).

If zone-based registration is to be disabled, the base station shall set this field to ‘000’.

ZONE_TIMER - Zone timer length.

The base station shall set this field to the ZONE_TIMER value shown in Table 3.7.2.3.2.1-1 corresponding to the length of the zone registration timer to be used by mobile stations.

MULT_SIDS - Multiple SID storage indicator.

If mobile stations may store entries of SID_NID_LIST containing different SIDs, the base station shall set this field to '1'; otherwise the base station shall set this field to '0'.

MULT_NIDS - Multiple NID storage indicator.

If mobile stations may store multiple entries of SID_NID_LIST having the same SID (with different NIDs), the base station shall set this field to '1'; otherwise the base station shall set this field to '0'.

BASE_LAT - Base station latitude.

The base station shall set this field to its latitude in units of 0.25 second, expressed as a two's complement signed number with positive numbers signifying North latitudes. The base station shall set this field to a value in the range -1296000 to 1296000 inclusive (corresponding to a range of -90° to +90°).

BASE_LONG - Base station longitude.

The base station shall set this field to its longitude in units of 0.25 second, expressed as a two's complement signed number with positive numbers signifying East longitude. The base station shall set this field to a value in the range -2592000 to 2592000 inclusive (corresponding to a range of -180° to +180°).

REG_DIST - Registration distance.

If mobile stations are to perform distance-based registration, the base station shall set this field to the non-zero "distance" beyond which the mobile station is to re-register (see 2.6.5.1.4). If mobile stations are not to perform distance-based registration, the base station shall set this field to 0.

3.7.3.3.2.16 Status Request Message

MSG_TAG: STRQM

Field	Length (bits)
QUAL_INFO_TYPE	8
QUAL_INFO_LEN	3
Type-specific fields	8 × QUAL_INFO_LEN
NUM_FIELDS	4

NUM_FIELDS occurrences of the following field:

{ (NUM_FIELDS)

RECORD_TYPE	8

} (NUM_FIELDS)

QUAL_INFO_TYPE - Qualification information type.

The base station shall set this field to the value shown in Table 3.7.2.3.2.15-1 to show the inclusion of qualification information in the type-specific fields.

QUAL_INFO_LEN - Qualification information length.

The base station shall set this field to the number of octets included in the type-specific fields of the qualification information.

Type-specific fields - Type-specific fields.

The base station shall set these fields to the qualification information according to the QUAL_INFO_TYPE field.

If QUAL_INFO_TYPE is equal to '00000000', the type-specific fields are omitted.

If QUAL_INFO_TYPE is equal to '00000001', the base station shall use the following fixed-length format for the type-specific fields:

Type-specific Field	Length (bits)
BAND_CLASS	5
RESERVED	3

If QUAL_INFO_TYPE is equal to '00000010', the base station shall use the following fixed-length format for the type-specific fields:

Type-specific Field	Length (bits)
BAND_CLASS	5
OP_MODE	8
RESERVED	3

BAND_CLASS - Band class.

The base station shall set this field to the CDMA band class, as specified in [30].

OP_MODE - Operating mode.

The base station shall set this field as shown in Table 3.7.2.3.2.15-3 to specify the operating mode qualification information.

RESERVED - Reserved bits.

The base station shall set this field to '000'.

NUM_FIELDS - Number of requested record fields in this message.

The base station shall set this field to the number of occurrences of RECORD_TYPE in this message.

The base station shall only request the status information records qualified by the included qualification information (see Table 2.7.4-1) in this message. The base station shall include one occurrence of the following field for each information record that is requested:

RECORD_TYPE - Information record type.

The base station shall set this field to the record type value shown in Table 2.7.4-1 corresponding to the information record requested.

3.7.3.3.2.17 Extended Handoff Direction Message

MSG_TAG: EHDM

Field	Length (bits)
USE_TIME	1
ACTION_TIME	6
HDM_SEQ	2
SEARCH_INCLUDED	1
SRCH_WIN_A	0 or 4
T_ADD	0 or 6
T_DROP	0 or 6
T_COMP	0 or 4
T_TDROP	0 or 4
HARD_INCLUDED	1
FRAME_OFFSET	0 or 4
PRIVATE_LCM	0 or 1
RESET_L2	0 or 1
RESET_FPC	0 or 1
SERV_NEG_TYPE	0 or 1
ENCRYPT_MODE	0 or 2
NOM_PWR_EXT	0 or 1
NOM_PWR	0 or 4
NUM_PREAMBLE	0 or 3
BAND_CLASS	0 or 5
CDMA_FREQ	0 or 11

(continues on next page)

Field	Length (bits)
ADD_LENGTH	3
Additional fields	8 × ADD_LENGTH

One or more occurrences of the following record:

{

PILOT_PN	9
PWR_COMB_IND	1
CODE_CHAN	8

}

USE_TIME - Use action time indicator.

This field indicates whether an explicit action time is specified in this message.

If an explicit action time is specified in this message, the base station shall set this field to '1'; otherwise, the base station shall set this field to '0'.

ACTION_TIME - Action time.

If the USE_TIME field is set to '1', the base station shall set this field to the System Time minus $FRAME\_OFFSET_S \times 1.25$ ms, in units of 80 ms (modulo 64), at which the handoff is to take effect. If the USE_TIME field is set to '0', the base station shall set this field to '000000'.

HDM_SEQ - *Extended Handoff Direction Message* sequence number.

This field is used by the mobile station in the *Power Measurement Report Message* to identify the order in which the reported pilot strengths are sent.

The base station shall set this field as specified in 2.6.6.2.2.2.

SEARCH_INCLUDED - Pilot search parameters included.

If the mobile station is to change its pilot search parameters, the base station shall set this field to '1'; otherwise, the base station shall set this field to '0'.

SRCH_WIN_A - Search window size for the Active Set and Candidate Set.

If SEARCH_INCLUDED is set to '1', the base station shall include the field SRCH_WIN_A and set this field to the window size parameter shown in Table 2.6.6.2.1-1 corresponding to the number of PN chips that the mobile station is to search for pilots in the Active Set and Candidate Set; otherwise, the base station shall omit this field.

T_ADD - Pilot detection threshold.

This value is used by the mobile station to trigger the transfer of a pilot from the Neighbor Set or Remaining Set to the Candidate Set (see 2.6.6.2.6) and to trigger the sending of the *Pilot Strength Measurement Message* or *Extended Pilot Strength Measurement Message* initiating the handoff process (see 2.6.6.2.5.2).

If SEARCH_INCLUDED is set to '1', the base station shall include the field T_ADD and set this field to the pilot detection threshold, expressed as an unsigned binary number equal to $\lfloor -2 \times 10 \times \log_{10} E_c/I_0 \rfloor$; otherwise, the base station shall omit this field.

T_DROP - Pilot drop threshold.

This value is used by mobile stations to start a handoff drop timer for pilots in the Active Set and the Candidate Set (see 2.6.6.2.3).

If SEARCH_INCLUDED is set to '1', the base station shall include the field T_DROP and set this field to the pilot drop threshold, expressed as an unsigned binary number equal to $\lfloor -2 \times 10 \times \log_{10} E_c/I_0 \rfloor$; otherwise, the base station shall omit this field.

T_COMP - Active Set versus Candidate Set comparison threshold.

The mobile station transmits a *Pilot Strength Measurement Message* or an *Extended Pilot Strength Measurement Message* when the strength of a pilot in the Candidate Set exceeds that of a pilot in the Active Set by this margin (see 2.6.6.2.5.2).

If SEARCH_INCLUDED is set to '1', the base station shall include the field T_COMP and set this field to the threshold Candidate Set pilot to Active Set pilot ratio, in units of 0.5 dB; otherwise, the base station shall omit this field.

T_TDROP - Drop timer value.

Timer value after which an action is taken by the mobile station for a pilot that is a member of the Active Set or Candidate Set, and whose strength has not become greater than T_DROP. If the pilot is a member of the Active Set, a *Pilot Strength Measurement Message* or an *Extended Pilot Strength Measurement Message* is issued. If the pilot is a member of the Candidate Set, it will be moved to the Neighbor Set.

If SEARCH_INCLUDED is set to '1', the base station shall include the field T_TDROP and set this field to the T_TDROP value shown in Table 2.6.6.2.3-1 corresponding to the drop timer value to be used by the mobile station; otherwise, the base station shall omit this field.

HARD_INCLUDED - Hard handoff parameters included.

If the mobile station is to change FRAME_OFFSET, PRIVATE_LCM, ENCRYPT_MODE, SERV_NEG_TYPE, NOM_PWR_EXT, NUM_PREAMBLE, NOM_PWR, BAND_CLASS, or CDMA_FREQ, or the mobile station is to perform a reset of the acknowledgment procedures, or the mobile station is to reset Forward Traffic Channel power control counters, the base station shall set this field to '1'; otherwise, the base station shall set this field to '0'.

FRAME_OFFSET - Frame offset.

The Forward and Reverse Traffic Channel frames are delayed FRAME_OFFSET × 1.25 ms relative to system timing (see [2]).

If HARD_INCLUDED is set to '1', the base station shall include the field FRAME_OFFSET and set it to the Forward and Reverse Traffic Channel frame offset; otherwise, the base station shall omit this field.

PRIVATE_LCM - Private long code mask indicator.

This field is used to change the long code mask after a hard handoff.

If HARD_INCLUDED is set to '1', the base station shall include the field PRIVATE_LCM and set it as described below; otherwise, the base station shall omit this field.

If the private long code mask is to be used after the handoff, the base station shall set this field to '1'; otherwise, the base station shall set this field to '0'.

RESET_L2 - Reset acknowledgment procedures command.

This field is used to reset acknowledgment processing in the mobile station.

If HARD_INCLUDED is set to '1', the base station shall include the field RESET_L2 and set it as described below; otherwise, the base station shall omit this field.

If the field is included and the mobile station is to reset its acknowledgment procedures, the base station shall set this field to '1'; otherwise, the base station shall set this field to '0'.

RESET_FPC - Reset Forward Traffic Channel power control.

This field is used to reset the Forward Traffic Channel power control counters.

If HARD_INCLUDED is set to '1', the base station shall include the field RESET_FPC and set it as described below; otherwise, the base station shall omit this field.

The base station shall set this field to '0' if the Forward Traffic Channel power control counters are to be maintained after completion of the handoff. If the counters are to be initialized as specified in 2.6.4.1.1.1, then the base station shall set this field to '1'.

SERV_NEG_TYPE - Service negotiation type.

If HARD_INCLUDED is set to '1', the base station shall include the field SERV_NEG_TYPE and set it as described below; otherwise, the base station shall omit this field.

If the mobile station is to use service negotiation, the base station shall set this field to '1'. If the mobile station is to use service option negotiation, the base station shall set this field to '0'.

ENCRYPT_MODE - Message encryption mode.

If HARD_INCLUDED is set to '1', the base station shall include the field ENCRYPT_MODE and set it to the ENCRYPT_MODE value shown in Table 3.7.2.3.2.8-2 corresponding to the encrypting mode that is to be used for messages sent on the Forward and Reverse Traffic Channels, as specified in 2.3.12.2; otherwise, the base station shall omit this field.

NOM_PWR_EXT - Extended nominal transmit power.

If HARD_INCLUDED is set to '1', the base station shall include this field and set it as described below; otherwise, the base station shall omit this field.

If the mobile station is being handed off to a base station operating in Band Class 0 or Band Class 3, the base station shall set this field to '0'; otherwise, it shall set this field as follows:

If the correction factor to be used by the mobile station in the open loop power estimate is between –24 dB and –9 dB inclusive, the base station shall set this field to '1'; otherwise (the correction factor is in the range –8 dB to 7 dB inclusive), the base station shall set this field to '0'.

NOM_PWR - Nominal transmit power offset.

If HARD_INCLUDED is set to '1', the base station shall include the field NOM_PWR and set it to the correction factor to be used by the mobile station in the open loop power estimate, expressed as a two's complement value in units of 1 dB (see [2]); otherwise, the base station shall omit this field.

NUM_PREAMBLE - Traffic Channel preamble length.

If HARD_INCLUDED is set to '0', the base station shall omit the NUM_PREAMBLE field; otherwise, the base station shall include this field and set it to the length of Traffic Channel preamble that the mobile station is to send when performing a handoff; as follows:

If, after the handoff, radio configuration 1 or radio configuration 2 is to be used, the base station shall set NUM_PREAMBLE to the Traffic Channel preamble length in 20 ms units; otherwise, the base station shall set NUM_PREAMBLE to the value shown in Table 3.7.3.3.2.17-1 corresponding to the Traffic Channel preamble length in 1.25 ms units.

Table 3.7.3.3.2.17-1. Traffic Channel Preamble Length

NUM_PREAMBLE or RESQ_NUM_PREAMBLE (binary)	Preamble Length in l.25 ms Increments
000	0
001	2
010	4
011	6
100	8
101	10
110	12
111	16

BAND_CLASS - Band class.

If HARD_INCLUDED is set to '1', the base station shall include the field BAND_CLASS and set it to the CDMA band class corresponding to the CDMA frequency assignment for the CDMA Channel as specified in [30]; otherwise, the base station shall omit this field.

CDMA_FREQ - Frequency assignment.

If HARD_INCLUDED is set to '1', the base station shall include the field CDMA_FREQ and set it to the CDMA Channel number, in the specified CDMA band class, corresponding to the CDMA frequency assignment for the CDMA Channel as specified in [2]; otherwise, the base station shall omit this field.

ADD_LENGTH - Number of octets in the additional fields.

The base station shall set this field to the number of octets included in the Additional fields. If Additional fields are not included in this message, the base station shall set this field to '000'.

Additional fields - Additional fields.

If the ADD_LENGTH field is not equal to '000', the base station shall include the following fields as additional fields.

Field	Length (bits)
P_REV	8

P_REV - Protocol revision level.

The base station shall set this field to the base station protocol revision level that the mobile station is to use after completion of the handoff.

The base station shall include one occurrence of the following three-field record for each member of the mobile station's new Active Set.

PILOT_PN - Pilot PN sequence offset index.

The base station shall set this field to the pilot PN sequence offset for this pilot in units of 64 PN chips.

PWR_COMB_IND - Power control symbol combining indicator.

If the Forward Traffic Channel associated with this pilot will carry the same closed-loop power control subchannel bits as that of the previous pilot in this message, the base station shall set this field to '1'; otherwise, the base station shall set this field to '0'. For the first occurrence of this record in the message, the base station shall set this field to '0'.

CODE_CHAN - Code channel index.

The base station shall set this field to the code channel index (see [2]) that the mobile station is to use as the Forward Fundamental Channel associated with this pilot. If Radio Configuration 1, 2, 3, or 5 (see [2]) is used, the base station shall set this field in the range 1 to 63 inclusive. If Radio Configuration 4, 6, 8, 11, or 12 is used, the base station shall set this field in the range 1 to 127 inclusive. If Radio Configuration 7 or 9 is used, the base station shall set this field in the range 1 to 255 inclusive.

3.7.3.3.2.18 Service Request Message

MSG_TAG: SRQM

Field	Length (bits)
SERV_REQ_SEQ	3
REQ_PURPOSE	4
RECORD_TYPE	0 or 8
RECORD_LEN	0 or 8
Type-specific fields	0 or 8 × RECORD_LEN

SERV_REQ_SEQ - Service request sequence number.

The base station shall set this field to the service request sequence number pertaining to this request message as specified in 3.6.4.1.2.1.1.

REQ_PURPOSE - Request purpose.

The base station shall set this field to the appropriate REQ_PURPOSE code from Table 3.7.3.3.2.18-1 to indicate the purpose of the message.

Table 3.7.3.3.2.18-1. REQ_PURPOSE Codes

REQ_PURPOSE (binary)	Meaning
0001	Indicates that the purpose of this message is to reject a proposed service configuration.
0010	Indicates that the purpose of this message is to propose a service configuration.
All other REQ_PURPOSE codes are reserved.	

RECORD_TYPE - Information record type.

If REQ_PURPOSE is set to '0010', the base station shall include this field and set it as follows; otherwise, the base station shall omit this field.

The base station shall set this field to the record type value shown in Table 3.7.5-1 corresponding to the Service Configuration information record.

RECORD_LEN - Information record length.

If REQ_PURPOSE is set to '0010', the base station shall include this field and set it as follows; otherwise, the base station shall omit this field.

The base station shall set this field to the number of octets included in the type-specific fields of the Service Configuration information record.

Type-specific fields - Type-specific fields.

If REQ_PURPOSE is set to '0010', the base station shall include this field and set it as follows; otherwise, the base station shall omit this field.

The base station shall set these fields as specified in 3.7.5.7 for the Service Configuration information record.

3.7.3.3.2.19 Service Response Message

MSG_TAG: SRPM

Field	Length (bits)
SERV_REQ_SEQ	3
RESP_PURPOSE	4
RECORD_TYPE	0 or 8
RECORD_LEN	0 or 8
Type-specific fields	0 or 8 × RECORD_LEN

SERV_REQ_SEQ - Service request sequence number.

The base station shall set this field to the value of the SERV_REQ_SEQ field in the *Service Request Message* to which it is responding.

RESP_PURPOSE - Response purpose.

The base station shall set this field to the appropriate RESP_PURPOSE code from Table 3.7.3.3.2.19-1 to indicate the purpose of the message.

Table 3.7.3.3.2.19-1. RESP_PURPOSE Codes

RESP_PURPOSE (binary)	Meaning
0001	Indicates that the purpose of the message is to reject a proposed service configuration.
0010	Indicates that the purpose of the message is to propose a service configuration.
All other RESP_PURPOSE codes are reserved.	

RECORD_TYPE - Information record type.

If RSP_PURPOSE is set to '0010', the base station shall include this field and set it as follows; otherwise, the base station shall omit this field.

The base station shall set this field to the record type value shown in Table 3.7.5-1 corresponding to the Service Configuration information record.

RECORD_LEN - Information record length.

If RSP_PURPOSE is set to '0010', the base station shall include this field and set it as follows; otherwise, the base station shall omit this field.

The base station shall set this field to the number of octets included in the type-specific fields of the Service Configuration information record.

Type-specific fields - Type-specific fields.

If RSP_PURPOSE is set to '0010', the base station shall include this field and set it as follows; otherwise, the base station shall omit this field.

The base station shall set these fields as specified in 3.7.5.7 for the Service Configuration information record.

3.7.3.3.2.20 Service Connect Message

MSG_TAG: SCM

Field	Length (bits)
USE_TIME	1
ACTION_TIME	6
SERV_CON_SEQ	3
RESERVED	2
USE_OLD_SERV_CONFIG	2
SR_ID	0 or 3
SR_ID_RESTORE_BITMAP	0 or 6
SYNC_ID_INCL	1
SYNC_ID_LEN	0 or 4
SYNC_ID	0 or (8 × SYNC_ID_LEN)
RECORD_TYPE	0 or 8
RECORD_LEN	0 or 8
Type-specific fields	0 or 8 × RECORD_LEN
RECORD_TYPE	0 or 8
RECORD_LEN	0 or 8
Type-specific fields	0 or 8 × RECORD_LEN

(continues on next page)

Field	Length (bits)
CC_INFO_INCL	0 or 1
NUM_CALLS_ASSIGN	0 or 8

NUM_CALLS_ASSIGN occurrences of the following record:

{ (NUM_CALLS_ASSIGN)

CON_REF	8
RESPONSE_IND	1
TAG	0 or 4
BYPASS_ALERT_ANSWER	0 or 1

} (NUM_CALLS_ASSIGN)

USE_TYPE0_PLCM	1
SYNC_ID_BS_INITIATED_IND	0 or 1
SR_ID_RELEASE_BITMAP_INCL	0 or 1
SR_ID_RELEASE_BITMAP	0 or 6

USE_TIME - Use action time indicator.

This field indicates whether an explicit action time is specified in this message.

If an explicit action time is specified in this message, the base station shall set this field to ‘1’; otherwise, the base station shall set this field to ‘0’.

ACTION_TIME - Action time.

If the USE_TIME field is set to ‘1’, the base station shall set this field to the System Time minus $FRAME\_OFFSET_S \times 1.25$ ms, in units of 80 ms (modulo 64), at which the specified service configuration is to take effect. If the USE_TIME field is set to ‘0’, the base station shall set this field to ‘000000’.

SERV_CON_SEQ - Connect sequence number.

The base station shall set this field to the connect sequence number pertaining to this connect message as specified in 3.6.4.1.2.1.2.

RESERVED - Reserved bits.

The base station shall set this field to ‘00’.

USE_OLD_SERV_CONFIG - Use stored service configuration indicator.

This field may be used by the base station to instruct the mobile station to use the stored service configuration (that is, both the Service Configuration information record and the Non-negotiable Service Configuration information record).

If MOB_P_REV is less than seven, the base station shall set this field to '00'.

If the base station had sent an *Extended Channel Assignment Message* with GRANTED_MODE set to '11' or a service configuration has been sent successfully to the mobile station upon entering the *Traffic Channel Substate*, the base station shall not set this field to '01' or '10'; otherwise, the base station shall set this field according to Table 3.7.3.3.2.20-1.

Table 3.7.3.3.2.20-1. USE_OLD_SERV_CONFIG values

USE_OLD_SERV_CONFIG Field (binary)	Description
00	Mobile Station is to use the SCR and NNSCR included in this message
01	Mobile Station is to use the stored service configuration, where all service option connections are to be restored.
10	Mobile Station is to use the stored service configuration but with the modifications specified by the SCR and NNSCR included in this message
11	Mobile Station is to restore the service option connection record(s) indicated via the SR_ID or SR_ID_RESTORE_BITMAP field and release the service option connection record(s) indicated via the SR_ID_RELEASE_BITMAP.

SR_ID – Service reference identifier.

If the USE_OLD_SERV_CONFIG field is not set to '11', the base station shall omit this field; otherwise, the base station shall include this field and set it as follows:

If the mobile station is to restore all remaining service option connections from the stored service configuration, the base station shall set this field to '111'; if the mobile station is to restore more than one but not all remaining service option connections from the stored service configuration, the base station shall set this field to '000'; otherwise, the base station shall set this field to the service reference identifier corresponding to the service option connection to be restored.

SR_ID_RESTORE_BITMAP – Bitmap of service reference identifiers to be restored.

If the SR_ID field is included and set to '000', the base station shall include this field and set it as follows; otherwise, the base station shall omit this field.

This field consists of the subfields defined in Table 3.7.2.3.2.21-6. The base station shall set a subfield to '1' to indicate that the mobile station is to restore the service option connection of the corresponding service reference identifier; otherwise, the base station shall set the subfield to '0' to indicated that the service option connection of the corresponding service reference identifier is not affected.

SYNC_ID_INCL - Service Configuration synchronization identifier included indicator.

The base station shall set this field to '1' if the SYNC_ID field is included in this message; otherwise, the base station shall set this field to '0'.

If MOB_P_REV is less than seven or if MOB_P_REV is less than 11 and USE_OLD_SERV_CONFIG field is set to '01' or '11', the base station shall set this field to '0'.

SYNC_ID_LEN - Service Configuration synchronization identifier length.

If the SYNC_ID_INCL field is set to '0', the base station shall omit this field; otherwise, the base station shall include this field and set it as follows:

The base station shall set this field to the length (in octets) of the SYNC_ID field included in this message. The base station shall set this field to a value larger than zero.

SYNC_ID - Service Configuration synchronization identifier.

If the SYNC_ID_INCL field is set to '0', the base station shall omit this field; otherwise, the base station shall include this field and set it as follows:

The base station shall set this field to the synchronization identifier corresponding to the service configuration conveyed by this message.

RECORD_TYPE - Information record type.

If USE_OLD_SERV_CONFIG is equal to '01' or '11', the base station shall omit this field; otherwise the base station shall include this field and set it as follows.

The base station shall set this field to the record type value shown in Table 3.7.5-1 corresponding to the Service Configuration information record.

RECORD_LEN - Information record length.

If USE_OLD_SERV_CONFIG is equal to '01' or '11', the base station shall omit this field; otherwise the base station shall include this field and set it as follows.

The base station shall set this field to the number of octets included in the type-specific fields of the Service Configuration information record.

Type-specific fields - Type-specific fields.

If USE_OLD_SERV_CONFIG is equal to '01' or '11', the base station shall omit this field; otherwise the base station shall include this field and set it as follows.

The base station shall set these fields as specified in 3.7.5.7 for the Service Configuration information record.

RECORD_TYPE - Information record type.

If USE_OLD_SERV_CONFIG is equal to '01' or '11', the base station shall omit this field; otherwise the base station shall include this field and set it as follows.

The base station shall set this field to the record type value shown in Table 3.7.5-1 corresponding to the Non-Negotiable Service Configuration information record.

RECORD_LEN - Information record length.

If USE_OLD_SERV_CONFIG is equal to '01' or '11', the base station shall omit this field; otherwise the base station shall include this field and set it as follows.

The base station shall set this field to the number of octets included in the type-specific fields of the Non-Negotiable Service Configuration information record.

Type-specific fields - Type-specific fields.

If USE_OLD_SERV_CONFIG is equal to ‘01’ or ‘11’, the base station shall omit this field; otherwise the base station shall include this field and set it as follows.

The base station shall set these fields as specified in 3.7.5.20 for the Non-Negotiable Service Configuration information record.

CC_INFO_INCL – Call Control information included indicator.

If the USE_OLD_SERV_CONFIG field is set to ‘01’, ‘10’, or ‘11’, the base station shall omit this field; otherwise, the base station shall include this field and set it as follows:

The base station shall set this field to ‘1’ if Call Control related parameters (to assign new call(s)) are included in this message; otherwise, the base station shall set this field to ‘0’.

NUM_CALLS_ASSIGN - Number of call assignments.

If the CC_INFO_INCL field is not included or is included but is set to ‘0’, the base station shall omit this field; otherwise, the base station shall include this field and set it as follows:

The base station shall set this field to the number of new call assignments included in this message.

The base station shall include NUM_CALLS_ASSIGN occurrences of the following variable length record.

CON_REF – Connection reference.

The base station shall set this field to the connection reference of the service option connection corresponding to this call.

RESPONSE_IND – Response indicator.

The base station shall set this field to ‘1’ if this call assignment is a response to an *Enhanced Origination Message* from the mobile station; otherwise, the base station shall set this field to ‘0’.

TAG – Transaction identifier.

If the RESPONSE_IND field is set to ‘0’, the base station shall omit this field; otherwise, the base station shall include this field and set it as follows:

The base station shall set this field to the value of the TAG field received in the *Enhanced Origination Message* to which this call assignment is the response.

BYPASS_ALERT_ANSWER - Bypass alert indicator.

If the RESPONSE_IND field is set to ‘1’, the base station shall omit this field; otherwise, the base station shall include this field and set it as follows:

If the mobile station is to bypass the Waiting for Order Substate and the Waiting for Mobile Station Answer Substate for this call, the base station shall set this field to ‘1’; otherwise, the base station shall set this field to ‘0’.

USE_TYPE0_PLCM - Use TYPE0 PLCM indicator.

If the mobile station is to start using the PLCM defined by PLCM_TYPE of ‘0000’ when P_REV_IN_USE is less than 11 or ‘0100’ when P_REV_IN_USE is greater than or equal to 11 (see Table 3.7.2.3.2.21-5), the base station shall set this field to ‘1’. If the mobile station is to continue using the current long code mask, the base station shall set this field to ‘0’.

SYNC_ID_BS_INITIATED_IND - SYNC_ID base station initiated indicator.

If the SYNC_ID_INCL field is set to ‘1’ and the USE_OLD_SERV_CONFIG field is included and is set to ‘10’, then the base station shall include this field and set it as follows; otherwise, the base station shall omit this field.

If the SYNC_ID included in this message is initiated by the base station and is to be used by mobile station to restore the stored configuration, then the base station shall set this field to ‘1’; otherwise the base station shall set this field to ‘0’.

SR_ID_RELEASE_BITMAP_INCL - SR_ID release bitamp included indicator.

If the USE_OLD_SERV_CONFIG field is not set to ‘11’, the base station shall omit this field; otherwise, the base station shall include this field and set it as follows:

If SR_ID_RELEASE_BITMAP is included, base station shall set this field to ‘1’; otherwise, base station shall set this field to ‘0’.

SR_ID_RELEASE_BITMAP - SR_ID release bitmap.

If the SR_ID_RELEASE_BITMAP_INCL field is not included or is included and is set to ‘0’, the base station shall omit this field; otherwise, the base station shall include this field and set it as follows:

This field consists of the subfields defined in Table 3.7.3.3.2.20-2. The base station shall set a subfield to '1' to indicate that the mobile station is to release the service option connection of the corresponding service reference identifier; otherwise, the base station shall set the subfield to '0' to indicated that the service option connection of the corresponding service reference identifier is not affected.

The base station shall not indicate the mobile station to restore and release the same SR_ID using this message.

Table 3.7.3.3.2.20-2. SR_ID_RELEASE_BITMAP Subfields.

Subfield	Length (bits)	Subfield Description
SR_ID_1	1	sr_id 1 to be released
SR_ID_2	1	sr_id 2 to be released
SR_ID_3	1	sr_id 3 to be released
SR_ID_4	1	sr_id 4 to be released
SR_ID_5	1	sr_id 5 to be released
SR_ID_6	1	sr_id 6 to be released

3.7.3.3.2.21 Service Option Control Message

MSG_TAG: SOCM

Field	Length (bits)
USE_TIME	1
ACTION_TIME	6
CON_REF	8
SERVICE_OPTION	16
CTL_REC_LEN	8
Type-specific fields	8 × CTL_REC_LEN

USE_TIME - Use action time indicator.

This field indicates whether an explicit action time is specified in this message.

If an explicit action time is specified in this message, the base station shall set this field to '1'; otherwise, the base station shall set this field to '0'.

ACTION_TIME - Action time.

If the USE_TIME field is set to '1', the base station shall set this field to the System Time minus $FRAME\_OFFSET_S \times 1.25$ ms, in units of 80 ms (modulo 64), at which the message is to take effect. If the USE_TIME field is set to '0', the base station shall set this field to '000000'.

CON_REF - Service option connection reference.

The base station shall set this field to the reference for the service option connection.

SERVICE_OPTION - Service option.

The base station shall set this field to the service option in use with the service option connection.

CTL_REC_LEN - Service option control record length.

The base station shall set this field to the number of octets included in the type-specific fields of this service option control record.

Type-specific fields - Type-specific fields.

The base station shall set these fields as specified by the requirements for the service option, which are defined external to this specification. See relevant service option specification.

3.7.3.3.2.22 TMSI Assignment Message

MSG_TAG: TASM

Field	Length (bits)
TMSI_ZONE_LEN	4
TMSI_ZONE	8 × TMSI_ZONE_LEN
TMSI_CODE	32
TMSI_EXP_TIME	24

TMSI_ZONE_LEN - TMSI zone length.

The base station shall set this field to the number of octets included in the TMSI_ZONE. The base station shall set this field to a value in the range 1 to 8 inclusive.

TMSI_ZONE - TMSI zone.

The base station shall set this field to the TMSI zone number, as specified in [27].

TMSI_CODE - Temporary mobile station identity code.

The base station shall set this field to the 32-bit TMSI code assigned to the mobile station.

If the base station is to deassign the TMSI, the base station shall set all the bits in this field to '1'.

TMSI_EXP_TIME - TMSI expiration time.

The base station shall set this field to the System Time in the units of 80 ms $\times 2^{12}$ when the TMSI is to expire.

3.7.3.3.2.23 Service Redirection Message

MSG_TAG: SRDM

Field	Length (bits)
RETURN_IF_FAIL	1
DELETE_TMSI	1
REDIRECT_TYPE	1

One or more occurrences of the following field:

{

RECORD_TYPE	8
RECORD_LEN	8
Type-specific fields	8 × RECORD_LEN

}

RETURN_IF_FAIL - Return if fail indicator.

The base station shall set this field to '1' if the mobile station is required to return to the system from which it is being redirected upon failure to obtain service using the redirection criteria specified in this message; otherwise, the base station shall set this field to '0'.

DELETE_TMSI - Delete TMSI indicator.

The base station shall set this field to '1' if the mobile station is required to delete the TMSI assigned to the mobile station; otherwise, the base station shall set this field to '0'.

REDIRECT_TYPE - Redirect indicator.

The base station shall set this field to the REDIRECT_TYPE value shown in Table 3.7.2.3.2.16-1 corresponding to the redirection type.

The base station shall include one occurrence of the following record:

RECORD_TYPE - Redirection record type.

The base station shall set this field to the RECORD_TYPE value shown in Table 3.7.2.3.2.16-2 corresponding to the type of redirection specified by this record.

RECORD_LEN - Redirection record length.

If RECORD_TYPE equals to '00000000', the base station shall set this field to '00000000'; otherwise, the base station shall set this field to the number of octets in the type-specific fields of this redirection record.

Type-specific fields - Redirection record type-specific fields.

The base station shall include type-specific fields based on the RECORD_TYPE of this redirection record.

If RECORD_TYPE is equal to '00000000', the base station shall not include the type-specific fields.

If RECORD_TYPE is equal to '00000010', the base station shall include the following fields:

Subfield	**Length (bits)**
BAND_CLASS	5
EXPECTED_SID	15
EXPECTED_NID	16
RESERVED	4
NUM_CHANS	4

NUM_CHANS occurrences of the following field:

{ (NUM_CHANS)

CDMA_CHAN	11

} (NUM_CHANS)

RESERVED	0-7 (as needed)

BAND_CLASS - Band class.

The base station shall set this field to the CDMA band class, as specified in [30].

EXPECTED_SID - Expected SID.

If the base station is redirecting the mobile station to a specific system, the base station shall set this field to the SID of that system; otherwise, the base station shall set this field to 0.

EXPECTED_NID - Expected NID.

If the base station is redirecting the mobile station to a specific network, the base station shall set this field to the NID of that network; otherwise, the base station shall set this field to 65535.

RESERVED - Reserved bits.

The base station shall set this field to '0000'.

NUM_CHANS - Number of CDMA Channels.

The base station shall set this field to the number of occurrences of the CDMA_CHAN field in this record.

CDMA_CHAN - CDMA Channel number.

For each CDMA Channel on which the mobile station is to attempt to acquire a CDMA system, the base station shall include one occurrence of this field specifying the associated CDMA Channel number.

RESERVED - Reserved bits.

The base station shall add reserved bits as needed in order to make the length of the entire record equal to an integer number of octets. The base station shall set these bits to '0'.

3.7.3.3.2.24 Supplemental Channel Assignment Message

MSG_TAG: SCAM

Field	Length (bits)
USE_RETRY_DELAY	1
RETRY_DELAY	0 or 8
REV_INCLUDED	1

Include the following record only if REV_INCLUDED is set to '1':

{

REV_DTX_DURATION	4
EXPL_REV_START_TIME	1
REV_START_TIME	0 or 6
USE_REV_DURATION	1
REV_DURATION	0 or 8
USE_REV_HDM_SEQ	1
REV_LINKED_HDM_SEQ	0 or 2
NUM_REV_CODES	3
USE_T_ADD_ABORT	1
USE_SCRM_SEQ_NUM	1
SCRM_SEQ_NUM	0 or 4
REV_PARMS_INCLUDED	1
T_MULCHAN	0 or 3
BEGIN_PREAMBLE	0 or 3
RESUME_PREAMBLE	0 or 3

}

FOR_INCLUDED	1

(continues on next page)

Field	Length (bits)

Include the following record only if FOR_INCLUDED is set to ‘1’:

{

FOR_SUP_CONFIG	2
EXPL_FOR_START_TIME	0 or 1
FOR_START_TIME	0 or 6
USE_FOR_DURATION	1
FOR_DURATION	0 or 8
USE_FOR_HDM_SEQ	0 or 1
FOR_LINKED_HDM_SEQ	0 or 2

Include the following fields and records only if FOR_INCLUDED is set to ‘1’ and FOR_SUP_CONFIG is set to ‘10’ or ‘11’:

NUM_SUP_PILOTS	3
NUM_FOR_SUP	3

Include NUM_SUP_PILOTS occurrences of the following record only if FOR_INCLUDED is set to ‘1’ and FOR_SUP_CONFIG is set to ‘10’ or ‘11’:

{ (NUM_SUP_PILOTS)

PILOT_PN	9
EXPL_CODE_CHAN	1

If EXPL_CODE_CHAN is set to ‘1’, for each PILOT_PN include NUM_FOR_SUP occurrences of the following field:

{ (NUM_FOR_SUP)

SUP_CODE_CHAN	0 or 8

} (NUM_FOR_SUP)

If EXPL_CODE_CHAN is set to ‘0’, the following field is included:

BASE_CODE_CHAN	0 or 8

} (NUM_SUP_PILOTS)

}

USE_RETRY_DELAY - Assign or Retry Indicator.

The base station shall set this field to '1' to indicate that this message contains a retry delay time; otherwise, the base station shall set this field to '0' to indicate that no RETRY_DELAY has been included.

RETRY_DELAY - *Supplemental Channel Request Message* retry delay.

If USE_RETRY_DELAY is set to '1', the base station shall include and set this field to the duration of the delay interval in units of 320 ms (4 frames) from the next 80 ms system time boundary during which the mobile station is not permitted to send a *Supplemental Channel Request Message*. The base station shall set RETRY_DELAY to '11111111' to indicate that the mobile station is to refrain from sending *Supplemental Channel Request Message*s indefinitely.

REV_INCLUDED - Reverse Supplemental Code Channel configuration indicator.

The base station shall set this field to '1' to indicate that this message contains assignment information for Reverse Supplemental Code Channels; otherwise, the base station shall set this field to '0'.

If REV_INCLUDED is set to '1', then the base station shall include the following fields, otherwise the base station shall omit the following fields:

REV_DTX_DURATION - Reverse Discontinuous Transmission Duration.

The base station shall set this field to the maximum duration of time in units of 20 ms that the mobile station is allowed to stop transmission on a Reverse Supplemental Code Channel within the reverse assignment duration. The base station shall set this field to '0000' if the mobile station is to stop using a Reverse Supplemental Code Channel once it has stopped transmitting on that Reverse Supplemental Code Channel. The base station shall set this field to '1111' if the mobile station is allowed to resume transmission on a Reverse Supplemental Code Channel at any time within the reverse assignment duration.

EXPL_REV_START_TIME - Explicit Reverse Supplemental Code Channel assignment start time indicator.

This field indicates whether a start time for the specified Reverse Supplemental Code Channel Assignment is specified in this message. If a REV_START_TIME is specified in this message, the base station shall set this field to '1'; otherwise, the base station shall set this field to '0'. If EXPL_REV_START_TIME is set to '1', then the base station shall set USE_REV_HDM_SEQ to '0'.

REV_START_TIME - Explicit start time for Reverse Supplemental Code Channel assignment.

If EXPL_REV_START_TIME is included and set to ‘1’, the base station shall include and set this field to the System Time, in units of 80 ms (modulo 64), at which the mobile station may start transmitting on the specified number of Reverse Supplemental Code Channels. If EXPL_REV_START_TIME is omitted or set to ‘0’, the base station shall omit this field.

USE_REV_DURATION - Use reverse duration indicator.

The base station shall set this field to ‘1’ if the REV_DURATION field is included in the message; otherwise, the base station shall set this field to ‘0’. If the mobile station is granted permission to transmit on Reverse Supplemental Code Channels (i.e., NUM_REV_CODES is not ‘000’) then a value of ‘0’ for this field indicates an infinite Reverse Supplemental Code Channel assignment duration (i.e., the mobile station may transmit on Reverse Supplemental Code Channels until it receives a subsequent *Supplemental Channel Assignment Message* or a *General Handoff Direction Message* that specifies an updated REV_DURATION or an updated value of NUM_REV_CODES).

REV_DURATION - Duration of Reverse Supplemental Code Channel assignment.

The base station shall include this field only if the USE_REV_DURATION field is included and set to ‘1’. If this field is included, this field indicates the allocated duration, in units of 80 ms, during which the mobile station may transmit on Reverse Supplemental Code Channels.

USE_REV_HDM_SEQ - Use Reverse *General Handoff Direction Message* sequence number indicator.

The base station shall set this field to ‘1’ to indicate that this Reverse Supplemental Code Channel assignment shall take effect at the same time as a corresponding *General Handoff Direction Message*; otherwise, the base station shall set this field to ‘0’. If USE_REV_HDM_SEQ is set to ‘1’, then the base station shall set EXPL_REV_START_TIME to ‘0’.

REV_LINKED_HDM_SEQ - Sequence number of the reverse linked *General Handoff Direction Message*.

If USE_REV_HDM_SEQ is included and set to ‘1’, then the base station shall set this field to the sequence number of the *General Handoff Direction Message* (HDM_SEQ) to which this Reverse Supplemental Code Channel assignment is linked.

NUM_REV_CODES - Number of Reverse Supplemental Code Channels.

The base station shall set this field to the number of Reverse Supplemental Code Channels that are assigned to the mobile station.

USE_T_ADD_ABORT - Reverse use T_ADD abort indicator.

The base station shall set this field to ‘1’ to indicate that the mobile station is to utilize the T_ADD Reverse Supplemental Code Channel abort feature for this reverse assignment; otherwise, the base station shall set this field to ‘0’.

USE_SCRM_SEQ_NUM - Use *Supplemental Channel Request Message* sequence number indicator.

The base station shall set this field to '1' if the SCRM_SEQ_NUM field is included in this message; otherwise, the base station shall set this field to '0'.

SCRM_SEQ_NUM - *Supplemental Channel Request Message* sequence number.

If USE_SCRM_SEQ_NUM is set to '1', the base station shall set this field to the sequence number corresponding to the SCRM_SEQ_NUM field in a *Supplemental Channel Request Message* to which the mobile station is to match this message; otherwise, the base station shall omit this field.

REV_PARMS_INCLUDED - Reverse additional parameters included flag.

The base station shall set this field to '1' if the following three fields (T_MULCHAN, BEGIN_PREAMBLE, and RESUME_PREAMBLE) are included in this message; otherwise, the base station shall set this field to '0'.

T_MULCHAN - *Supplemental Channel Request Message* pilot strength reporting offset.

If REV_PARMS_INCLUDED is set to '1', the base station shall include this field and set this field to the threshold offset that the mobile station is to use when reporting neighbor pilot strength measurements in a *Supplemental Channel Request Message*. The mobile station is to interpret this field as an offset to T_ADD ranging from 0.5 dB (corresponding to T_MULCHAN = '000') to 4.0 dB (corresponding to T_MULCHAN = '111') in 0.5 dB increments.

BEGIN_PREAMBLE - Number of preamble frames on Reverse Supplemental Code Channels at the beginning of transmission on Reverse Supplemental Code Channel.

If REV_PARMS_INCLUDED is set to '1', the base station shall include this field and set this field to the number of Reverse Supplemental Code Channel preamble frames that the mobile station is to send when beginning transmission on Reverse Supplemental Code Channels.

RESUME_PREAMBLE - Number of preamble frames on Reverse Supplemental Code Channels at the resumption of transmission.

If REV_PARMS_INCLUDED is set to '1', the base station shall include this field and set this field to the number of Reverse Supplemental Code Channel preamble frames that the mobile station is to send when resuming transmission on a Reverse Supplemental Code Channel following an autonomous suspension of transmission on an allocated Supplemental Code Channel.

FOR_INCLUDED - Forward Supplemental Code Channel configuration indicator.

The base station shall set this field to ‘1’ to indicate that this message contains assignment information for Forward Supplemental Code Channels; otherwise, the base station shall set this field to ‘0’.

If FOR_INCLUDED is set to ‘1’, then the base station shall include the remaining fields in this message, otherwise the base station shall omit all of the following except for RESERVED.

FOR_SUP_CONFIG - Forward Supplemental Code Channel configuration indicator.

The base station shall set this field to ‘00’ to indicate that the mobile station is to stop processing the Forward Supplemental Code Channels at the implicit action time of the message.

The base station shall set this field to ‘01’ to indicate that the mobile station is to start processing the Forward Supplemental Code Channels in the Code Channel List at the implicit, explicit, or linked start time specified by this message (see 2.6.6.2.5.1).

The base station shall set this field to ‘10’ if the Forward Supplemental Code Channels are specified in the message and the mobile station is to update its Code Channel List and stop processing the Forward Supplemental Code Channels at the implicit action time of the message.

The base station shall set this field to ‘11’ if the Forward Supplemental Code Channels are specified in the message and the mobile station is to start processing the Forward Supplemental Code Channels at the implicit, explicit, or linked start time specified by this message (see 2.6.6.2.5.1).

EXPL_FOR_START_TIME - Explicit forward start time indicator.

This field indicates whether an explicit Forward Supplemental Code Channel start time is specified in this message.

The base station shall include this field only if FOR_SUP_CONFIG is set to ’01 or ‘11’. If a FOR_START_TIME is specified in this message, the base station shall set this field to ‘1’; otherwise, the base station shall set this field to ‘0’. If EXPL_FOR_START_TIME is set to ‘1’, then the base station shall set USE_FOR_HDM_SEQ to ‘0’.

The following field is included only if EXPL_FOR_START_TIME is included and set to ‘1’:

FOR_START_TIME - Start time of the Forward Supplemental Code Channel assignment.

The base station shall include this field only if FOR_SUP_CONFIG is set to '01' or '11'. If the EXPL_FOR_START_TIME field is set to '1', the base station shall set this field to the System Time, in units of 80 ms (modulo 64), at which the mobile station is to start processing the Forward Supplemental Code Channels. If EXPL_FOR_START_TIME is set to '0', the base station shall omit this field.

USE_FOR_DURATION - Use forward duration indicator.

The base station shall set this field to '1' if FOR_DURATION is included in the message; otherwise, the base station shall set this field to '0'.

If FOR_SUP_CONFIG is set to '01' or '11', then the base station may set this field to '0' to indicate that the mobile station is to be assigned an infinite Forward Supplemental Code Channel assignment duration (i.e., the mobile station is to continue processing Forward Supplemental Code Channels until it receives a subsequent *Supplemental Channel Assignment Message* or a *General Handoff Direction Message* that specifies an updated FOR_DURATION). Otherwise, the base station may set this field to '1' to indicate that the mobile station is to be given a Forward Supplemental Code Channel assignment for the duration specified by the FOR_DURATION field.

If FOR_SUP_CONFIG is set to '00' or '10', then the base station shall set USE_FOR_DURATION to '0'.

FOR_DURATION - Duration of Forward Supplemental Code Channel assignment.

The base station shall include this field only if USE_FOR_DURATION is included and set to '1'. If this field is included, this field indicates allocated duration, in units of 80 ms, during which the mobile station is to process the Forward Supplemental Code Channels.

USE_FOR_HDM_SEQ - Use Forward *General Handoff Direction Message* sequence number indicator.

This field indicates whether processing of the Forward Supplemental Code Channels shall take effect at the same time as a corresponding *General Handoff Direction Message*.

The base station shall include this field only if FOR_SUP_CONFIG is equal to '01' or '11'. If this message is linked with a *General Handoff Direction Message*, the base station shall set this field to '1'; otherwise, the base station shall set this field to '0'. If USE_FOR_HDM_SEQ is set to '1', then the base station shall set EXPL_FOR_START_TIME to '0'.

FOR_LINKED_HDM_SEQ - Sequence number of the *General Handoff Direction Message*.

If the USE_FOR_HDM_SEQ field is included and set to '1', the base station shall set this field to the sequence number of the *General Handoff Direction Message* (HDM_SEQ) to which this Forward Supplemental Code Channel assignment is linked; otherwise, if USE_FOR_HDM_SEQ is not included or is set to '0', then base station shall omit this field.

NUM_SUP_PILOTS - Number of pilots in the Active Set which have at least one associated Supplemental Code Channel.

If FOR_SUP_CONFIG is included and is set to '10' or '11', the base station shall include this field and shall set this field to the number of pilots for which there is at least one associated Supplemental Code Channel. This field shall not be included if FOR_SUP_CONFIG is omitted or is set to '01' or '00'.

NUM_FOR_SUP - Number of Forward Supplemental Code Channels.

If FOR_SUP_CONFIG is included and is set to '10' or '11', the base station shall include this field and shall set this field to the number of Forward Supplemental Code Channels assigned to the mobile station. NUM_FOR_SUP shall not exceed the maximum number of Forward Supplemental Code Channels for the negotiated multiplex option. This field shall not be included if FOR_SUP_CONFIG is omitted or is set to '01' or '00'.

If FOR_SUP_CONFIG is included and is set to '10' or '11', the base station shall include NUM_SUP_PILOTS occurrences of the following record, one for each pilot for which there is at least one associated Supplemental Code Channel:

PILOT_PN - Pilot PN sequence offset index.

The base station shall set this field to the pilot PN sequence offset for this pilot in units of 64 PN chips.

EXPL_CODE_CHAN - Explicit code channel indicator

The base station shall set this field to '1' to indicate explicit assignment of each Forward Supplemental Code Channel. The base station shall set this field to '0' if the mobile station is to use NUM_FOR_SUP successive code channels beginning with index BASE_CODE_CHAN (i.e., BASE_CODE_CHAN through BASE_CODE_CHAN + NUM_FOR_SUP – 1). In both cases (i.e., the explicit code channel list format and range format), the order of the code channel indices is the same for all the pilots specified in this message (i.e., the ith code channel index in the list for each pilot PN sequence offset indicates the appropriate code channel to be used for the ith Forward Supplemental Code Channel).

If EXPL_CODE_CHAN is set to '1', then the base station shall include NUM_FOR_SUP occurrences of the following field, one for each pilot which has been included:

SUP_CODE_CHAN - Supplemental Code Channel index.

The base station shall set this field to the code channel index (see [2]) in the range 1 to 63 inclusive of the Supplemental Code Channel associated with this pilot.

If EXPL_CODE_CHAN is set to '0', then the base station shall include the following field:

BASE_CODE_CHAN - Base code channel index.

If EXPL_CODE_CHAN is equal to '0', the base station shall include this field and set it to the base code channel index (see [2]) in the range of 1 to (63 – NUM_FOR_SUP + 1), inclusive, that the mobile station is to use as the first Forward Supplemental Code Channel associated with this pilot. The mobile station is to use NUM_FOR_SUP successive code channels beginning with index BASE_CODE_CHAN (i.e., BASE_CODE_CHAN through BASE_CODE_CHAN + NUM_FOR_SUP – 1) for the Forward Supplemental Code Channels associated with this pilot.

The base station shall not include this field if EXPL_CODE_CHAN is equal to '1' or if EXPL_CODE_CHAN is not included.

3.7.3.3.2.25 Power Control Message

MSG_TAG: PCNM

Field	Length (bits)
PWR_CNTL_STEP	3
USE_TIME	1
ACTION_TIME	0 or 6
FPC_INCL	1
FPC_MODE	0 or 3
FPC_PRI_CHAN	0 or 1
FPC_OLPC_FCH_INCL	0 or 1
FPC_FCH_FER	0 or 5
FPC_FCH_MIN_SETPT	0 or 8
FPC_FCH_MAX_SETPT	0 or 8
FPC_OLPC_DCCH_INCL	0 or 1
FPC_DCCH_FER	0 or 5
FPC_DCCH_MIN_SETPT	0 or 8
FPC_DCCH_MAX_SETPT	0 or 8
FPC_SEC_CHAN	0 or 1
NUM_SUP	0 or 2

Include NUM_SUP occurrence of the following record:

{ (NUM_SUP)

SCH_ID	1
FPC_SCH_FER	5
FPC_SCH_MIN_SETPT	8
FPC_SCH_MAX_SETPT	8

} (NUM_SUP)

FPC_THRESH_INCL	0 or 1

(continues on next page)

Field	Length (bits)
FPC_SETPT_THRESH	0 or 8
FPC_THRESH_SCH_INCL	0 or 1
FPC_SETPT_THRESH_SCH	0 or 8
RPC_INCL	1
RPC_NUM_REC	0 or 2

If RPC INCL is set to '1', RPC_NUM_REC occurrences of the following record:

{ (RPC_NUM_REC)

RPC_ADJ_REC_TYPE	4
RPC_ADJ_REC_LEN	5
EXT_RPC_ADJ_REC_LEN	0 or 10
Type-specific fields	8× RPC_ADJ_REC_LEN, or 8 × EXT_RPC_ADJ_REC_LEN

} (RPC_NUM_REC)

REV_PDCH_PARMS_INCL	1
REV_PDCH_NUM_ARQ_ROUNDS_NORMAL	0 or 2
REV_PDCH_NUM_ARQ_ROUNDS_BOOST	0 or 2
FPC_BCMC_CHAN	0 or 1

PWR_CNTL_STEP - Power control step size

The base station shall set this field to the closed loop power control step size parameter shown in Table 3.7.3.3.2.25-1 corresponding to the power control step size that the mobile station is to use for closed loop power control.

Table 3.7.3.3.2.25-1. Closed Loop Power Control Step Size

PWR_CNTL_STEP (binary)	Power Control Step Size (dB nominal)
000	1
001	0.5
010	0.25
All other PWR_CNTL_STEP values are reserved.	

USE_TIME - Use action time indicator.

This field indicates whether an ACTION_TIME is specified in this message.

If an ACTION_TIME is specified in this message, the base station shall set this field to '1'; otherwise, the base station shall set this field to '0'.

ACTION_TIME - Action time.

If the USE_TIME field is set to '1', the base station shall set this field to the System Time minus $\text{FRAME\_OFFSET}_S \times 1.25$ ms, in units of 80 ms (modulo 64), at which the message is to take effect. If the USE_TIME field is set to '0', the base station shall omit this field.

FPC_INCL - Forward Link Power Control parameter included indicator.

If the forward power control related information is included in this message, the base station shall set this field to '1'; otherwise, the base station shall set this field to '0'.

FPC_MODE - Forward Power Control Operation Mode Indicator

If FPC_INCL is set to '0', the base station shall omit this field; otherwise, the base station shall set this field as follows:

The base station shall set the value to the forward power control operation mode (see [2]).

FPC_PRI_CHAN - Power Control Subchannel indicator.

If FPC_INCL is set to '0', the base station shall omit this field; otherwise, the base station shall set this field as follows:

The base station shall set this field to '0' if the mobile station is to perform the primary inner loop estimation on the received Forward Fundamental Channel. The base station shall set this field to '1' if the mobile station is to perform the primary inner loop estimation on the received Forward Dedicated Control Channel.

If only the Fundamental Channel is assigned, the base station shall set this field to '0'. If only the Dedicated Control Channel is assigned, the base station shall set this field to '1'.

If the F-CPCCH is assigned, the base station will multiplex the Power Control Subchannel on the F-CPCCH; otherwise:

If this field is set to '0', the base station will multiplex the Power Control Subchannel on the Forward Fundamental Channel; otherwise, the base station will multiplex the Power Control Subchannel on the Forward Dedicated Control Channel.

FPC_OLPC_FCH_INCL - Fundamental Channel Outer Loop Power Control parameter included indicator.

If FPC_INCL is set to '0', the base station shall omit this field; otherwise, the base station shall set this field as follows:

If the forward link fundamental channel outer loop power control parameters are included in this message, the base station shall set this field to '1'; otherwise, the base station shall set this field to '0'.

FPC_FCH_FER - Fundamental channel target Frame Error Rate.

If FPC_OLPC_FCH_INCL is included and set to '1', the base station shall set this field to the target Frame Error Rate on the Forward Fundamental Channel, as specified in Table 3.7.3.3.2.25-2; otherwise, the base station shall omit this field.

Table 3.7.3.3.2.25-2. Target Frame Error Rate

FER (Binary)	Frame Error Rate
00000	0.2%
00001-10100	0.5% -10% (in units of 0.5%)
10101-11001	11% - 15% (in units of 1.0%)
11010-11110	18% - 30% (in units of 3.0%)
11111	Reserved

FPC_FCH_MIN_SETPT - Minimum Fundamental Channel Outer Loop Eb/Nt setpoint

If FPC_OLPC_FCH_INCL is included and set to '1', the base station shall set this field to minimum Fundamental Channel Outer Loop Eb/Nt setpoint, in units of 0.125 dB; otherwise, the base station shall omit this field.

The base station shall set this field to '11111111', when it directs the mobile station to set this Eb/Nt setpoint to the current setpoint used at the mobile station on this channel.

FPC_FCH_MAX_SETPT - Maximum Fundamental Channel Outer Loop Eb/Nt setpoint

If FPC_OLPC_FCH_INCL is included and set to '1', the base station shall set this field to maximum Fundamental Channel Outer Loop Eb/Nt setpoint, in units of 0.125 dB; otherwise, the base station shall omit this field.

The base station shall set this field to ‘11111111’, when it directs the mobile station to set this Eb/Nt setpoint to the current setpoint used at the mobile station on this channel.

FPC_OLPC_DCCH_INCL - Dedicated Control Channel Outer Loop Power Control parameter included indicator.

If FPC_INCL is set to ‘0’, the base station shall omit this field; otherwise, the base station shall set this field as follows:

If the forward link Dedicated Control Channel outer loop power control parameters are included in this message, the base station shall set this field to ‘1’; otherwise, the base station shall set this field to ‘0’.

FPC_DCCH_FER - Dedicated Control Channel target Frame Error Rate.

If FPC_OLPC_DCCH_INCL is included and set to ‘1’, the base station shall set this field to the target Frame Error Rate on the Forward Dedicated Control Channel, as specified in Table 3.7.3.3.2.25-2; otherwise, the base station shall omit this field.

FPC_DCCH_MIN_SETPT - Minimum Dedicated Control Channel Outer Loop Eb/Nt setpoint.

If FPC_OLPC_DCCH_INCL is included and set to ‘1’, the base station shall set this field to minimum Dedicated Control Channel Outer Loop Eb/Nt setpoint, in units of 0.125 dB; otherwise, the base station shall omit this field.

The base station shall set this field to ‘11111111’, when it directs the mobile station to set this Eb/Nt setpoint to the current setpoint used at the mobile station on this channel.

FPC_DCCH_MAX_SETPT - Maximum Dedicated Control Channel Outer Loop Eb/Nt setpoint.

If FPC_OLPC_DCCH_INCL is included and set to ‘1’, the base station shall set this field to maximum Dedicated Control Channel Outer Loop Eb/Nt setpoint, in units of 0.125 dB; otherwise, the base station shall omit this field.

The base station shall set this field to ‘11111111’, when it directs the mobile station to set this Eb/Nt setpoint to the current setpoint used at the mobile station on this channel.

FPC_SEC_CHAN - Master Supplemental channel index.

If FPC_INCL is set to '1' and FPC_MODE is set to '001', '010', ‘101’, or ‘110’, the base station shall set this field to the master Supplemental Channel index; otherwise, the base station shall omit this field.

NUM_SUP – Number of Supplemental Channels.

If FPC_INCL is set to ‘0’, the base station shall omit this field; otherwise, the base station shall set this field to the total number of the Supplemental Channels.

The base station shall include NUM_SUP occurrences of the following record:

SCH_ID - Supplemental channel index.

The base station shall set this field to the Supplemental Channel index.

FPC_SCH_FER - Supplemental channel target Frame Error Rate.

The base station shall set this field to the target Frame Error Rate on the Supplemental Channel, as specified in Table 3.7.3.3.2.25-2.

FPC_SCH_MIN_SETPT - Minimum Supplemental Channel outer loop Eb/Nt setpoint.

The base station shall set this field to minimum Supplemental Channel Outer Loop Eb/Nt setpoint, in units of 0.125 dB.

The base station shall set this field to '11111111', when it directs the mobile station to set this Eb/Nt setpoint to the current setpoint used at the mobile station on this channel.

FPC_SCH_MAX_SETPT - Maximum Supplemental Channel outer loop Eb/Nt setpoint.

The base station shall set this field to maximum Supplemental Channel Outer Loop Eb/Nt setpoint, in units of 0.125 dB.

The base station shall set this field to '11111111', when it directs the mobile station to set this Eb/Nt setpoint to the current setpoint used at the mobile station on this channel.

FPC_THRESH_INCL - Setpoint Report Threshold included indicator.

If FPC_INCL is set to '0', the base station shall omit this field; otherwise, the base station shall set this field as follows:

If FPC_SETPT_THRESH is included in this message, the base station shall set this field to '1'; otherwise, the base station shall set this field to '0'.

FPC_SETPT_THRESH - Setpoint Report Threshold.

If FPC_THRESH_INCL is set to '1', the base station shall set the value to FPC_SETPT_THRESH (in units of 0.125 dB) above which the outer loop report message will be sent by the mobile station; otherwise, the base station shall omit this field.

FPC_THRESH_SCH_INCL- SCH Setpoint Report Threshold included indicator.

If FPC_INCL is set to '0', the base station shall omit this field; otherwise, the base station shall set this field as follows:

If FPC_SETPT_THRESH_SCH is included in this message, the base station shall set this field to '1'; otherwise, the base station shall set this field to '0'.

FPC_SETPT_THRESH_SCH - SCH Setpoint Report Threshold.

If FPC_THRESH_SCH_INCL is set to '1', the base station shall set the value to FPC_SETPT_THRESH_SCH (in units of 0.125 dB) above which the outer loop report message will be sent by the mobile station; otherwise, the base station shall omit this field.

RPC_INCL - Reverse Link Power Control parameter included indicator.

If the reverse power control related information is included in this message, the base station shall set this field to '1'; otherwise, the base station shall set this field to '0'.

RPC_NUM_REC - Number of records for Reverse Link Power Control.

If RPC_INCL is set to '0', the base station shall omit this field; otherwise, the base station shall set this field to one less than the number of records included in this message.

If RPC_NUM_REC is included in this message, the base station shall include RPC_NUM_REC occurrences of the following record:

RPC_ADJ_REC_TYPE - Reverse Link Power Control adjustment record type.

The base station shall set this field to the value shown in Table 3.7.3.3.2.25-3 corresponding to the type of adjustment that is to be used.

Table 3.7.3.3.2.25-3. RPC_ADJ_REC_TYPE and RPC_ADJ_REC_LEN fields

Description	RPC_ADJ_REC_TYPE (binary)	RPC_ADJ_REC_LEN
Reverse Channel Adjustment Gain	0000	2-7
Attribute Adjustment Gain for Basic Rates	0001	2-26
Attribute Adjustment Gain for Higher Rates	0010	2-31
Attribute Adjustment Gain for R-CQICH	0011	2-6
Attribute Adjustment Gain for R-PDCCH	0100	13-936
All other values are reserved.		

RPC_ADJ_REC_LEN - Reverse Link Power Control adjustment record length.

If RPC_ADJ_REC_TYPE is not equal to '0100', the base station shall set this field to the number of octets in the type-specific fields of this adjustment record as given in Table 3.7.3.3.2.25-3.

If RPC_ADJ_REC_TYPE is equal to '0100', the base station shall set this field to '0000'.

EXT_RPC_ADJ_REC_LEN-	Reverse Link Power Control adjustment record length.
	If RPC_ADJ_REC_TYPE is not equal to '0100', the base station shall omit this field; otherwise, the base station shall include this field and set it as follows.
	If RPC_ADJ_REC_TYPE is equal to '0100', the base station shall set this field to the number of octets in the type-specific fields of this adjustment record as given in Table 3.7.3.3.2.25-3.
Type-specific fields -	Reverse Link Power Control adjustment record type-specific fields.
	The base station shall include type-specific fields based on the RPC_ADJ_REC_TYPE of this adjustment record, as specified as below.

If RPC_ADJ_REC_TYPE is equal to ‘0000’, the base station shall set type-specific fields as specified in Table 3.7.3.3.2.25-4.

Table 3.7.3.3.2.25-4. Type Specific Fields for RECORD_TYPE = ‘0000’

Fields	Length (Bits)
FCH_INCL	1
FCH_CHAN_ADJ_GAIN	0 or 8
DCCH_INCL	1
DCCH_CHAN_ADJ_GAIN	0 or 8
SCH0_INCL	1
SCH0_CHAN_ADJ_GAIN	0 or 8
SCH1_INCL	1
SCH1_CHAN_ADJ_GAIN	0 or 8
REV_ACKCH_INCL	1
REV_ACKCH_CHAN_ADJ_GAIN	0 or 8
REV_CQICH_INCL	1
REV_CQICH_CHAN_ADJ_GAIN	0 or 8
RESERVED	0-7 (if needed)

FCH_INCL - FCH channel adjustment gain included indicator.

If FCH_CHAN_ADJ_GAIN is included in this message, the base station shall set this field to ‘1’; otherwise, the base station shall set this field to ‘0’.

FCH_CHAN_ADJ_GAIN - Channel adjustment gain for Reverse Fundamental Channel.

If FCH_INCL is set to ‘0’, the base station shall omit this field; otherwise, the base station shall set each field to the value of the gain adjustment that the mobile station is to make for the Reverse Fundamental Channel. The base station shall set this field to the correction factor expressed as a two’s complement value in units of 0.125 dB. The base station shall set the value in the range from –48 to 48 inclusive.

DCCH_INCL - DCCH channel adjustment gain included indicator.

If DCCH_CHAN_ADJ_GAIN is included in this message, the base station shall set this field to ‘1’; otherwise, the base station shall set this field to ‘0’.

DCCH_CHAN_ADJ_GAIN - Channel adjustment gain for the Reverse Dedicated Control Channel.

If DCCH_INCL is set to ‘0’, the base station shall omit this field; otherwise, the base station shall set each field to the value of the gain adjustment that the mobile station is to make for the Reverse Dedicated Control Channel. The base station shall set this field to the correction factor expressed as a two’s complement value in units of 0.125 dB. The base station shall set the value in the range from –48 to 48 inclusive.

SCH0_INCL - SCH0 channel adjustment gain included indicator.

If SCH0_CHAN_ADJ_GAIN is included in this message, the base station shall set this field to ‘1’; otherwise, the base station shall set this field to ‘0’.

SCH0_CHAN_ADJ_GAIN - Channel adjustment gain for Reverse Supplemental Channel 0.

If SCH0_INCL is set to ‘0’, the base station shall omit this field; otherwise, the base station shall set each field to the value of the gain adjustment that the mobile station is to make for the Reverse Supplemental Channel 0. The base station shall set this field to the correction factor expressed as a two’s complement value in units of 0.125 dB. The base station shall set the value in the range from –48 to 48 inclusive.

SCH1_INCL - SCH1 channel adjustment gain included indicator.

If SCH1_CHAN_ADJ_GAIN is included in this message, the base station shall set this field to ‘1’; otherwise, the base station shall set this field to ‘0’.

SCH1_CHAN_ADJ_GAIN - Channel adjustment gain for Reverse Supplemental Channel 1.

If SCH1_INCL is set to ‘0’, the base station shall omit this field; otherwise, the base station shall set each field to the value of the gain adjustment that the mobile station is to make for the Supplemental Channel 1. The base station shall set this field to the correction factor expressed as a two’s complement value in units of 0.125 dB. The base station shall set the value in the range from –48 to 48 inclusive.

REV_ACKCH_INCL - Reverse Acknowledgment Channel channel adjustment gain included indicator.

If REV_ACKCH_CHAN_ADJ_GAIN is included in this message, the base station shall set this field to ‘1’; otherwise, the base station shall set this field to ‘0’.

REV_ACKCH_CHAN_ADJ_GAIN - Channel adjustment gain for Reverse Acknowledgment Channel.

If REV_ACKCH_INCL is set to ‘0’, the base station shall omit this field; otherwise, the base station shall set each field to the value of the gain adjustment that the mobile station is to make for the Reverse Acknowledgment Channel. The base station shall set this field to the correction factor expressed as a two’s complement value in units of 0.125 dB. The base station shall set the value in the range from -24 to 24 inclusive.

REV_CQICH_INCL - Reverse Channel Quality Indicator Channel channel adjustment gain included indicator.

If REV_CQICH_CHAN_ADJ_GAIN is included in this message, the base station shall set this field to ‘1’; otherwise, the base station shall set this field to ‘0’.

REV_CQICH_CHAN_ADJ_GAIN - Channel adjustment gain for Reverse Channel Quality Indicator Channel.

If REV_CQICH_INCL is set to ‘0’, the base station shall omit this field; otherwise, the base station shall set each field to the value of the gain adjustment that the mobile station is to make for the Reverse Channel Quality Indicator Channel. The base station shall set this field to the correction factor expressed as a two’s complement value in units of 0.125 dB. The base station shall set the value in the range from -16 to 16 inclusive.

RESERVED - Reserved bits.

The base station shall add reserved bits as needed in order to make the length of the entire record equal to an integer number of octets. The base station shall set these bits to ‘0’.

If RPC_ADJ_REC_TYPE is equal to ‘0001’, the base station shall set type-specific fields as specified in Table 3.7.3.3.2.25-5.

Table 3.7.3.3.2.25-5. Type Specific Fields for RECORD_TYPE = '0001'

Fields	Length (Bits)
RL_ATT_ADJ_GAIN_TYPE	1
RC3_RC5_20MS_INCL	1
RL_ATT_ADJ_GAIN_1500	0 or 8
RL_ATT_ADJ_GAIN_2700	0 or 8
RL_ATT_ADJ_GAIN_4800	0 or 8
RL_ATT_ADJ_GAIN_9600	0 or 8
RC4_RC6_20MS_INCL	1
RL_ATT_ADJ_GAIN_1800	0 or 8
RL_ATT_ADJ_GAIN_3600	0 or 8
RL_ATT_ADJ_GAIN_7200	0 or 8
RL_ATT_ADJ_GAIN_14400	0 or 8
5MS_INCL	1
RL_ATT_ADJ_GAIN_9600_5MS	0 or 8
RC3_RC5_40MS_INCL	1
RL_ATT_ADJ_GAIN_1350_40MS	0 or 8
RL_ATT_ADJ_GAIN_2400_40MS	0 or 8
RL_ATT_ADJ_GAIN_4800_40MS	0 or 8
RL_ATT_ADJ_GAIN_9600_40MS	0 or 8
RC4_RC6_40MS_INCL	1
RL_ATT_ADJ_GAIN_1800_40MS	0 or 8
RL_ATT_ADJ_GAIN_3600_40MS	0 or 8
RL_ATT_ADJ_GAIN_7200_40MS	0 or 8
RL_ATT_ADJ_GAIN_14400_40MS	0 or 8
RC3_RC5_80MS_INCL	1
RL_ATT_ADJ_GAIN_1200_80MS	0 or 8
RL_ATT_ADJ_GAIN_2400_80MS	0 or 8
RL_ATT_ADJ_GAIN_4800_80MS	0 or 8

(continues on next page)

Fields	Length (Bits)
RL_ATT_ADJ_GAIN_9600_80MS	0 or 8
RC4_RC6_80MS_INCL	1
RL_ATT_ADJ_GAIN_1800_80MS	0 or 8
RL_ATT_ADJ_GAIN_3600_80MS	0 or 8
RL_ATT_ADJ_GAIN_7200_80MS	0 or 8
RL_ATT_ADJ_GAIN_14400_80MS	0 or 8

RESERVED	0-7 (if needed)

RL_ATT_ADJ_GAIN_TYPE - Reverse Link Attribute Adjustment Gain value type indicator.

If the following fields are set to the nominal attribute gain adjustment values that the mobile station is to use for the transmission attributes (relative to Nominal_Attribute_Gain specified in [2]), the base station shall set this field to ‘0’. If the following fields are set to the pilot reference level adjustment values that the mobile station is to use for the transmission attributes (relative to Pilot_Reference_Level specified in [2]), the base station shall set this field to ‘1’.

RC3_RC5_20MS_INCL - Reverse Link Attribute Adjustment Gain for Radio Configuration 3 or 5 of 20 ms frame included indicator.

If Reverse Link Attribute adjustment Gain for Radio Configuration 3 or 5 of 20 ms frame is included in this message, the base station shall set this field to ‘1’; otherwise, the base station shall set this field to ‘0’.

RL_ATT_ADJ_GAIN_1500- Reverse Link Attribute Adjustment Gain for the transmission rate 1500 bits/s.

If RC3_RC5_20MS_INCL is set to ‘0’, the base station shall omit this field.

If RC3_RC5_20MS_INCL is set to ‘1’ and RL_ATT_ADJ_GAIN_TYPE is set to ‘0’, the base station shall set this field to the value of the nominal attribute gain adjustment that the mobile station is to make for the transmission attributes with transmission rate 1500 bits/s, convolutional code and 20ms frame. The base station shall set the value in the range from –48 to 48 inclusive.

If RC3_RC5_20MS_INCL is set to ‘1’ and RL_ATT_ADJ_GAIN_TYPE is set to ‘1’, the base station shall set this field to the value of the pilot reference level adjustment that the mobile station is to make for the transmission attributes with transmission rate 1500 bits/s, convolutional code and 20ms frame.

The base station shall set this field to the correction factor expressed as a two's complement value in units of 0.125 dB.

RL_ATT_ADJ_GAIN_2700- Reverse Link Attribute Adjustment Gain for the transmission rate 2700 bits/s.

If RC3_RC5_20MS_INCL is set to '0', the base station shall omit this field.

If RC3_RC5_20MS_INCL is set to '1' and RL_ATT_ADJ_GAIN_TYPE is set to '0', the base station shall set this field to the value of the nominal attribute gain adjustment that the mobile station is to make for the transmission attributes with transmission rate 2700 bits/s, convolutional code and 20ms frame. The base station shall set the value in the range from –48 to 48 inclusive.

If RC3_RC5_20MS_INCL is set to '1' and RL_ATT_ADJ_GAIN_TYPE is set to '1', the base station shall set this field to the value of the pilot reference level adjustment that the mobile station is to make for the transmission attributes with transmission rate 2700 bits/s, convolutional code and 20ms frame.

The base station shall set this field to the correction factor expressed as a two's complement value in units of 0.125 dB.

RL_ATT_ADJ_GAIN_4800- Reverse Link Attribute Gain Adjustment for the transmission rate 4800 bits/s.

If RC3_RC5_20MS_INCL is set to '0', the base station shall omit this field.

If RC3_RC5_20MS_INCL is set to '1' and RL_ATT_ADJ_GAIN_TYPE is set to '0', the base station shall set this field to the value of the nominal attribute gain adjustment that the mobile station is to make for the transmission attributes with transmission rate 4800 bits/s, convolutional code and 20ms frame. The base station shall set the value in the range from –48 to 48 inclusive.

If RC3_RC5_20MS_INCL is set to '1' and RL_ATT_ADJ_GAIN_TYPE is set to '1', the base station shall set this field to the value of the pilot reference level adjustment that the mobile station is to make for the transmission attributes with transmission rate 4800 bits/s, convolutional code and 20ms frame.

The base station shall set this field to the correction factor expressed as a two's complement value in units of 0.125 dB.

RL_ATT_ADJ_GAIN_9600- Reverse Link Attribute Gain Adjustment for the transmission rate 9600 bits/s.

If RC3_RC5_20MS_INCL is set to '0', the base station shall omit this field.

If RC3_RC5_20MS_INCL is set to '1' and RL_ATT_ADJ_GAIN_TYPE is set to '0', the base station shall set this field to the value of the nominal attribute gain adjustment that the mobile station is to make for the transmission attributes with transmission rate 9600 bits/s, convolutional code and 20ms frame. The base station shall set the value in the range from –48 to 48 inclusive.

If RC3_RC5_20MS_INCL is set to '1' and RL_ATT_ADJ_GAIN_TYPE is set to '1', the base station shall set this field to the value of the pilot reference level adjustment that the mobile station is to make for the transmission attributes with transmission rate 9600 bits/s, convolutional code and 20ms frame.

The base station shall set this field to the correction factor expressed as a two's complement value in units of 0.125 dB.

RC4_RC6_20MS_INCL - Reverse Link Attribute Adjustment Gain for Radio Configuration 4 or 6 of 20ms frame included indicator.

If Reverse Link Attribute Adjustment Gain for Radio Configuration 4 or 6 of 20ms frame is included in this message, the base station shall set this field to '1'; otherwise, the base station shall set this field to '0'.

RL_ATT_ADJ_GAIN_1800- Reverse Link Attribute Gain Adjustment for the transmission rate 1800 bits/s.

If RC4_RC6_20MS_INCL is set to '0', the base station shall omit this field.

If RC4_RC6_20MS_INCL is set to '1' and RL_ATT_ADJ_GAIN_TYPE is set to '0', the base station shall set this field to the value of the nominal attribute gain adjustment that the mobile station is to make for the transmission attributes with transmission rate 1800 bits/s, convolutional code and 20ms frame. The base station shall set the value in the range from –48 to 48 inclusive.

If RC4_RC6_20MS_INCL is set to '1' and RL_ATT_ADJ_GAIN_TYPE is set to '1', the base station shall set this field to the value of the pilot reference level adjustment that the mobile station is to make for the transmission attributes with transmission rate 1800 bits/s, convolutional code and 20ms frame.

The base station shall set this field to the correction factor expressed as a two's complement value in units of 0.125 dB.

RL_ATT_ADJ_GAIN_3600- Reverse Link Attribute Adjustment Gain for the transmission rate 3600 bits/s.

If RC4_RC6_20MS_INCL is set to '0', the base station shall omit this field.

If RC4_RC6_20MS_INCL is set to '1' and RL_ATT_ADJ_GAIN_TYPE is set to '0', the base station shall set this field to the value of the nominal attribute gain adjustment that the mobile station is to make for the transmission attributes with transmission rate 3600 bits/s, convolutional code and 20ms frame. The base station shall set the value in the range from –48 to 48 inclusive.

If RC4_RC6_20MS_INCL is set to '1' and RL_ATT_ADJ_GAIN_TYPE is set to '1', the base station shall set this field to the value of the pilot reference level adjustment that the mobile station is to make for the transmission attributes with transmission rate 3600 bits/s, convolutional code and 20ms frame.

The base station shall set this field to the correction factor expressed as a two's complement value in units of 0.125 dB.

RL_ATT_ADJ_GAIN_7200- Reverse Link Attribute Adjustment Gain for the transmission rate 7200 bits/s.

If RC4_RC6_20MS_INCL is set to '0', the base station shall omit this field.

If RC4_RC6_20MS_INCL is set to '1' and RL_ATT_ADJ_GAIN_TYPE is set to '0', the base station shall set this field to the value of the nominal attribute gain adjustment that the mobile station is to make for the transmission attributes with transmission rate 7200 bits/s, convolutional code and 20ms frame. The base station shall set the value in the range from –48 to 48 inclusive.

If RC4_RC6_20MS_INCL is set to '1' and NORM_ATT_GAIN_TYPE is set to '1', the base station shall set this field to the value of the pilot reference level adjustment that the mobile station is to make for the transmission attributes with transmission rate 7200 bits/s, convolutional code and 20ms frame.

The base station shall set this field to the correction factor expressed as a two's complement value in units of 0.125 dB.

RL_ATT_ADJ_GAIN_14400- Reverse Link Attribute Adjustment Gain for the transmission rate 14400 bits/s.

If RC4_RC6_20MS_INCL is set to '0', the base station shall omit this field.

If RC4_RC6_20MS_INCL is set to '1' and RL_ATT_ADJ_GAIN_TYPE is set to '0', the base station shall set this field to the value of the nominal gain adjustment that the mobile station is to make for the transmission attributes with transmission rate 14400 bits/s, convolutional code and 20ms frame. The base station shall set the value in the range from –48 to 48 inclusive.

If RC4_RC6_20MS_INCL is set to '1' and RL_ATT_ADJ_GAIN_TYPE is set to '1', the base station shall set this field to the value of the pilot reference level adjustment that the mobile station is to make for the transmission attributes with transmission rate 14400 bits/s, convolutional code and 20ms frame.

The base station shall set this field to the correction factor expressed as a two's complement value in units of 0.125 dB.

5MS_INCL - 5ms frame Reverse Link Attribute Adjustment Gain included indicator.

If Reverse Link Attribute Adjustment Gain for 5ms frame is included in this message, the base station shall set this field to '1'; otherwise, the base station shall set this field to '0'.

RL_ATT_ADJ_GAIN_9600_5MS - Reverse Link Attribute Adjustment Gain for the transmission rate 9600 bits/s with 5ms frame.

If 5MS_INCL is set to '0', the base station shall omit this field.

If 5MS_INCL is set to '1' and RL_ATT_ADJ_GAIN_TYPE is set to '0', the base station shall set this field to the value of the nominal attribute gain adjustment that the mobile station is to make for the transmission attributes with transmission rate 9600 bits/s, convolutional code and 5ms frame. The base station shall set the value in the range from –48 to 48 inclusive.

If 5MS_INCL is set to '1' and RL_ATT_ADJ_GAIN_TYPE is set to '1', the base station shall set this field to the value of the pilot reference level adjustment that the mobile station is to make for the transmission attributes with transmission rate 9600 bits/s, convolutional code and 5ms frame.

The base station shall set this field to the correction factor expressed as a two's complement value in units of 0.125 dB.

RC3_RC5_40MS_INCL - Reverse Link Attribute Adjustment Gain for Radio Configuration 3 or 5 of 40 ms frame included indicator.

If Reverse Link Attribute adjustment Gain for Radio Configuration 3 or 5 of 40 ms frame is included in this message, the base station shall set this field to '1'; otherwise, the base station shall set this field to '0'.

RL_ATT_ADJ_GAIN_1350_40MS - Reverse Link Attribute Adjustment Gain for the transmission rate 1350 bits/s.

If RC3_RC5_40MS_INCL is set to '0', the base station shall omit this field.

If RC3_RC5_40MS_INCL is set to '1' and RL_ATT_ADJ_GAIN_TYPE is set to '0', the base station shall set this field to the value of the nominal attribute gain adjustment that the mobile station is to make for the transmission attributes with transmission rate 1350 bits/s, convolutional code and 40ms frame. The base station shall set the value in the range from –48 to 48 inclusive.

If RC3_RC5_40MS_INCL is set to '1' and RL_ATT_ADJ_GAIN_TYPE is set to '1', the base station shall set this field to the value of the pilot reference level adjustment that the mobile station is to make for the transmission attributes with transmission rate 1350 bits/s, convolutional code and 40ms frame.

The base station shall set this field to the correction factor expressed as a two's complement value in units of 0.125 dB.

RL_ATT_ADJ_GAIN_2400_40MS - Reverse Link Attribute Adjustment Gain for the transmission rate 2400 bits/s.

If RC3_RC5_40MS_INCL is set to '0', the base station shall omit this field.

If RC3_RC5_40MS_INCL is set to '1' and RL_ATT_ADJ_GAIN_TYPE is set to '0', the base station shall set this field to the value of the nominal attribute gain adjustment that the mobile station is to make for the transmission attributes with transmission rate 2400 bits/s, convolutional code and 40ms frame. The base station shall set the value in the range from –48 to 48 inclusive.

If RC3_RC5_40MS_INCL is set to '1' and RL_ATT_ADJ_GAIN_TYPE is set to '1', the base station shall set this field to the value of the pilot reference level adjustment that the mobile station is to make for the transmission attributes with transmission rate 2400 bits/s, convolutional code and 40ms frame.

The base station shall set this field to the correction factor expressed as a two's complement value in units of 0.125 dB.

RL_ATT_ADJ_GAIN_4800_40MS - Reverse Link Attribute Gain Adjustment for the transmission rate 4800 bits/s.

If RC3_RC5_40MS_INCL is set to '0', the base station shall omit this field.

If RC3_RC5_40MS_INCL is set to '1' and RL_ATT_ADJ_GAIN_TYPE is set to '0', the base station shall set this field to the value of the nominal attribute gain adjustment that the mobile station is to make for the transmission attributes with transmission rate 4800 bits/s, convolutional code and 40ms frame. The base station shall set the value in the range from –48 to 48 inclusive.

If RC3_RC5_40MS_INCL is set to '1' and RL_ATT_ADJ_GAIN_TYPE is set to '1', the base station shall set this field to the value of the pilot reference level adjustment that the mobile station is to make for the transmission attributes with transmission rate 4800 bits/s, convolutional code and 40ms frame.

The base station shall set this field to the correction factor expressed as a two's complement value in units of 0.125 dB.

RL_ATT_ADJ_GAIN_9600_40MS - Reverse Link Attribute Gain Adjustment for the transmission rate 9600 bits/s.

If RC3_RC5_40MS_INCL is set to ‘0’, the base station shall omit this field.

If RC3_RC5_40MS_INCL is set to ‘1’ and RL_ATT_ADJ_GAIN_TYPE is set to ‘0’, the base station shall set this field to the value of the nominal attribute gain adjustment that the mobile station is to make for the transmission attributes with transmission rate 9600 bits/s, convolutional code and 40ms frame. The base station shall set the value in the range from –48 to 48 inclusive.

If RC3_RC5_40MS_INCL is set to ‘1’ and RL_ATT_ADJ_GAIN_TYPE is set to ‘1’, the base station shall set this field to the value of the pilot reference level adjustment that the mobile station is to make for the transmission attributes with transmission rate 9600 bits/s, convolutional code and 40ms frame.

The base station shall set this field to the correction factor expressed as a two’s complement value in units of 0.125 dB.

RC4_RC6_40MS_INCL - Reverse Link Attribute Adjustment Gain for Radio Configuration 4 or 6 of 40ms frame included indicator.

If Reverse Link Attribute Adjustment Gain for Radio Configuration 4 or 6 of 40ms frame is included in this message, the base station shall set this field to ‘1’; otherwise, the base station shall set this field to ‘0’.

RL_ATT_ADJ_GAIN_1800_40MS - Reverse Link Attribute Gain Adjustment for the transmission rate 1800 bits/s.

If RC4_RC6_40MS_INCL is set to ‘0’, the base station shall omit this field.

If RC4_RC6_40MS_INCL is set to ‘1’ and RL_ATT_ADJ_GAIN_TYPE is set to ‘0’, the base station shall set this field to the value of the nominal attribute gain adjustment that the mobile station is to make for the transmission attributes with transmission rate 1800 bits/s, convolutional code and 40ms frame. The base station shall set the value in the range from –48 to 48 inclusive.

If RC4_RC6_40MS_INCL is set to ‘1’ and RL_ATT_ADJ_GAIN_TYPE is set to ‘1’, the base station shall set this field to the value of the pilot reference level adjustment that the mobile station is to make for the transmission attributes with transmission rate 1800 bits/s, convolutional code and 40ms frame.

The base station shall set this field to the correction factor expressed as a two’s complement value in units of 0.125 dB.

RL_ATT_ADJ_GAIN_3600_40MS - Reverse Link Attribute Adjustment Gain for the transmission rate 3600 bits/s.

If RC4_RC6_40MS_INCL is set to ‘0’, the base station shall omit this field.

If RC4_RC6_40MS_INCL is set to '1' and RL_ATT_ADJ_GAIN_TYPE is set to '0', the base station shall set this field to the value of the nominal attribute gain adjustment that the mobile station is to make for the transmission attributes with transmission rate 3600 bits/s, convolutional code and 40ms frame. The base station shall set the value in the range from –48 to 48 inclusive.

If RC4_RC6_40MS_INCL is set to '1' and RL_ATT_ADJ_GAIN_TYPE is set to '1', the base station shall set this field to the value of the pilot reference level adjustment that the mobile station is to make for the transmission attributes with transmission rate 3600 bits/s, convolutional code and 40ms frame.

The base station shall set this field to the correction factor expressed as a two's complement value in units of 0.125 dB.

RL_ATT_ADJ_GAIN_7200_40MS - Reverse Link Attribute Adjustment Gain for the transmission rate 7200 bits/s.

If RC4_RC6_40MS_INCL is set to '0', the base station shall omit this field.

If RC4_RC6_40MS_INCL is set to '1' and RL_ATT_ADJ_GAIN_TYPE is set to '0', the base station shall set this field to the value of the nominal attribute gain adjustment that the mobile station is to make for the transmission attributes with transmission rate 7200 bits/s, convolutional code and 40ms frame. The base station shall set the value in the range from –48 to 48 inclusive.

If RC4_RC6_40MS_INCL is set to '1' and NORM_ATT_GAIN_TYPE is set to '1', the base station shall set this field to the value of the pilot reference level adjustment that the mobile station is to make for the transmission attributes with transmission rate 7200 bits/s, convolutional code and 40ms frame.

The base station shall set this field to the correction factor expressed as a two's complement value in units of 0.125 dB.

RL_ATT_ADJ_GAIN_14400_40MS - Reverse Link Attribute Adjustment Gain for the transmission rate 14400 bits/s.

If RC4_RC6_40MS_INCL is set to '0', the base station shall omit this field.

If RC4_RC6_40MS_INCL is set to '1' and RL_ATT_ADJ_GAIN_TYPE is set to '0', the base station shall set this field to the value of the nominal gain adjustment that the mobile station is to make for the transmission attributes with transmission rate 14400 bits/s, convolutional code and 40ms frame. The base station shall set the value in the range from –48 to 48 inclusive.

If RC4_RC6_40MS_INCL is set to '1' and RL_ATT_ADJ_GAIN_TYPE is set to '1', the base station shall set this field to the value of the pilot reference level adjustment that the mobile station is to make for the transmission attributes with transmission rate 14400 bits/s, convolutional code and 40ms frame.

The base station shall set this field to the correction factor expressed as a two's complement value in units of 0.125 dB.

RC3_RC5_80MS_INCL - Reverse Link Attribute Adjustment Gain for Radio Configuration 3 or 5 of 80 ms frame included indicator.

If Reverse Link Attribute adjustment Gain for Radio Configuration 3 or 5 of 80 ms frame is included in this message, the base station shall set this field to '1'; otherwise, the base station shall set this field to '0'.

RL_ATT_ADJ_GAIN_1200_80MS - Reverse Link Attribute Adjustment Gain for the transmission rate 1200 bits/s.

If RC3_RC5_80MS_INCL is set to '0', the base station shall omit this field.

If RC3_RC5_80MS_INCL is set to '1' and RL_ATT_ADJ_GAIN_TYPE is set to '0', the base station shall set this field to the value of the nominal attribute gain adjustment that the mobile station is to make for the transmission attributes with transmission rate 1200 bits/s, convolutional code and 80ms frame. The base station shall set the value in the range from –48 to 48 inclusive.

If RC3_RC5_80MS_INCL is set to '1' and RL_ATT_ADJ_GAIN_TYPE is set to '1', the base station shall set this field to the value of the pilot reference level adjustment that the mobile station is to make for the transmission attributes with transmission rate 1200 bits/s, convolutional code and 80ms frame.

The base station shall set this field to the correction factor expressed as a two's complement value in units of 0.125 dB.

RL_ATT_ADJ_GAIN_2400_80MS - Reverse Link Attribute Adjustment Gain for the transmission rate 2400 bits/s.

If RC3_RC5_80MS_INCL is set to '0', the base station shall omit this field.

If RC3_RC5_80MS_INCL is set to '1' and RL_ATT_ADJ_GAIN_TYPE is set to '0', the base station shall set this field to the value of the nominal attribute gain adjustment that the mobile station is to make for the transmission attributes with transmission rate 2400 bits/s, convolutional code and 80ms frame. The base station shall set the value in the range from –48 to 48 inclusive.

If RC3_RC5_80MS_INCL is set to '1' and RL_ATT_ADJ_GAIN_TYPE is set to '1', the base station shall set this field to the value of the pilot reference level adjustment that the mobile station is to make for the transmission attributes with transmission rate 2400 bits/s, convolutional code and 80ms frame.

The base station shall set this field to the correction factor expressed as a two's complement value in units of 0.125 dB.

RL_ATT_ADJ_GAIN_4800_80MS - Reverse Link Attribute Gain Adjustment for the transmission rate 4800 bits/s.

If RC3_RC5_80MS_INCL is set to '0', the base station shall omit this field.

If RC3_RC5_40MS_INCL is set to '1' and RL_ATT_ADJ_GAIN_TYPE is set to '0', the base station shall set this field to the value of the nominal attribute gain adjustment that the mobile station is to make for the transmission attributes with transmission rate 4800 bits/s, convolutional code and 80ms frame. The base station shall set the value in the range from –48 to 48 inclusive.

If RC3_RC5_80MS_INCL is set to '1' and RL_ATT_ADJ_GAIN_TYPE is set to '1', the base station shall set this field to the value of the pilot reference level adjustment that the mobile station is to make for the transmission attributes with transmission rate 4800 bits/s, convolutional code and 80ms frame.

The base station shall set this field to the correction factor expressed as a two's complement value in units of 0.125 dB.

RL_ATT_ADJ_GAIN_9600_80MS - Reverse Link Attribute Gain Adjustment for the transmission rate 9600 bits/s.

If RC3_RC5_80MS_INCL is set to '0', the base station shall omit this field.

If RC3_RC5_80MS_INCL is set to '1' and RL_ATT_ADJ_GAIN_TYPE is set to '0', the base station shall set this field to the value of the nominal attribute gain adjustment that the mobile station is to make for the transmission attributes with transmission rate 9600 bits/s, convolutional code and 80ms frame. The base station shall set the value in the range from –48 to 48 inclusive.

If RC3_RC5_80MS_INCL is set to '1' and RL_ATT_ADJ_GAIN_TYPE is set to '1', the base station shall set this field to the value of the pilot reference level adjustment that the mobile station is to make for the transmission attributes with transmission rate 9600 bits/s, convolutional code and 80ms frame.

The base station shall set this field to the correction factor expressed as a two's complement value in units of 0.125 dB.

RC4_RC6_80MS_INCL - Reverse Link Attribute Adjustment Gain for Radio Configuration 4 or 6 of 80ms frame included indicator.

If Reverse Link Attribute Adjustment Gain for Radio Configuration 4 or 6 of 80ms frame is included in this message, the base station shall set this field to '1'; otherwise, the base station shall set this field to '0'.

RL_ATT_ADJ_GAIN_1800_80MS - Reverse Link Attribute Gain Adjustment for the transmission rate 1800 bits/s.

If RC4_RC6_80MS_INCL is set to '0', the base station shall omit this field.

If RC4_RC6_80MS_INCL is set to '1' and RL_ATT_ADJ_GAIN_TYPE is set to '0', the base station shall set this field to the value of the nominal attribute gain adjustment that the mobile station is to make for the transmission attributes with transmission rate 1800 bits/s, convolutional code and 80ms frame. The base station shall set the value in the range from –48 to 48 inclusive.

If RC4_RC6_80MS_INCL is set to '1' and RL_ATT_ADJ_GAIN_TYPE is set to '1', the base station shall set this field to the value of the pilot reference level adjustment that the mobile station is to make for the transmission attributes with transmission rate 1800 bits/s, convolutional code and 80ms frame.

The base station shall set this field to the correction factor expressed as a two's complement value in units of 0.125 dB.

RL_ATT_ADJ_GAIN_3600_80MS - Reverse Link Attribute Adjustment Gain for the transmission rate 3600 bits/s.

If RC4_RC6_80MS_INCL is set to '0', the base station shall omit this field.

If RC4_RC6_80MS_INCL is set to '1' and RL_ATT_ADJ_GAIN_TYPE is set to '0', the base station shall set this field to the value of the nominal attribute gain adjustment that the mobile station is to make for the transmission attributes with transmission rate 3600 bits/s, convolutional code and 80ms frame. The base station shall set the value in the range from –48 to 48 inclusive.

If RC4_RC6_80MS_INCL is set to '1' and RL_ATT_ADJ_GAIN_TYPE is set to '1', the base station shall set this field to the value of the pilot reference level adjustment that the mobile station is to make for the transmission attributes with transmission rate 3600 bits/s, convolutional code and 80ms frame.

The base station shall set this field to the correction factor expressed as a two's complement value in units of 0.125 dB.

RL_ATT_ADJ_GAIN_7200_80MS - Reverse Link Attribute Adjustment Gain for the transmission rate 7200 bits/s.

If RC4_RC6_80MS_INCL is set to '0', the base station shall omit this field.

If RC4_RC6_80MS_INCL is set to '1' and RL_ATT_ADJ_GAIN_TYPE is set to '0', the base station shall set this field to the value of the nominal attribute gain adjustment that the mobile station is to make for the transmission attributes with transmission rate 7200 bits/s, convolutional code and 80ms frame. The base station shall set the value in the range from –48 to 48 inclusive.

If RC4_RC6_80MS_INCL is set to '1' and NORM_ATT_GAIN_TYPE is set to '1', the base station shall set this field to the value of the pilot reference level adjustment that the mobile station is to make for the transmission attributes with transmission rate 7200 bits/s, convolutional code and 80ms frame.

The base station shall set this field to the correction factor expressed as a two's complement value in units of 0.125 dB.

RL_ATT_ADJ_GAIN_14400_80MS - Reverse Link Attribute Adjustment Gain for the transmission rate 14400 bits/s.

If RC4_RC6_80MS_INCL is set to '0', the base station shall omit this field.

If RC4_RC6_80MS_INCL is set to '1' and RL_ATT_ADJ_GAIN_TYPE is set to '0', the base station shall set this field to the value of the nominal gain adjustment that the mobile station is to make for the transmission attributes with transmission rate 14400 bits/s, convolutional code and 80ms frame. The base station shall set the value in the range from –48 to 48 inclusive.

If RC4_RC6_40MS_INCL is set to '1' and RL_ATT_ADJ_GAIN_TYPE is set to '1', the base station shall set this field to the value of the pilot reference level adjustment that the mobile station is to make for the transmission attributes with transmission rate 14400 bits/s, convolutional code and 80ms frame.

The base station shall set this field to the correction factor expressed as a two's complement value in units of 0.125 dB.

RESERVED - Reserved bits.

The base station shall add reserved bits as needed in order to make the length of the entire record equal to an integer number of octets. The base station shall set these bits to '0'.

If RPC_ADJ_REC_TYPE is equal to '0010', the base station shall set type-specific fields as specified in Table 3.7.3.3.2.25-6.

Table 3.7.3.3.2.25-6. Type Specific Fields for RECORD_TYPE = '0010'

Fields	Length (Bits)
CODE_TYPE	1
RL_ATT_ADJ_GAIN_TYPE	1
RC3_RC5_20MS_INCL	1
RL_ATT_ADJ_GAIN_19200	0 or 8
RL_ATT_ADJ_GAIN_38400	0 or 8
RL_ATT_ADJ_GAIN_76800	0 or 8
RL_ATT_ADJ_GAIN_153600	0 or 8
RL_ATT_ADJ_GAIN_307200	0 or 8
RL_ATT_ADJ_GAIN_614400	0 or 8
RC4_RC6_20MS_INCL	1
RL_ATT_ADJ_GAIN_28800	0 or 8
RL_ATT_ADJ_GAIN_57600	0 or 8
RL_ATT_ADJ_GAIN_115200	0 or 8
RL_ATT_ADJ_GAIN_230400	0 or 8
RL_ATT_ADJ_GAIN_460800	0 or 8
RL_ATT_ADJ_GAIN_1036800	0 or 8
RC3_RC5_40MS_INCL	1
RL_ATT_ADJ_GAIN_19200_40MS	0 or 8
RL_ATT_ADJ_GAIN_38400_40MS	0 or 8
RL_ATT_ADJ_GAIN_76800_40MS	0 or 8
RL_ATT_ADJ_GAIN_153600_40MS	0 or 8
RL_ATT_ADJ_GAIN_307200_40MS	0 or 8
RC4_RC6_40MS_INCL	1
RL_ATT_ADJ_GAIN_28800_40MS	0 or 8
RL_ATT_ADJ_GAIN_57600_40MS	0 or 8
RL_ATT_ADJ_GAIN_115200_40MS	0 or 8

(continues on next page)

Fields	Length (Bits)
RL_ATT_ADJ_GAIN_230400_40MS	0 or 8
RL_ATT_ADJ_GAIN_518400_40MS	0 or 8
RC3_RC5_80MS_INCL	1
RL_ATT_ADJ_GAIN_19200_80MS	0 or 8
RL_ATT_ADJ_GAIN_38400_80MS	0 or 8
RL_ATT_ADJ_GAIN_76800_80MS	0 or 8
RL_ATT_ADJ_GAIN_153600_80MS	0 or 8
RC4_RC6_80MS_INCL	1
RL_ATT_ADJ_GAIN_28800_80MS	0 or 8
RL_ATT_ADJ_GAIN_57600_80MS	0 or 8
RL_ATT_ADJ_GAIN_115200_80MS	0 or 8
RL_ATT_ADJ_GAIN_259200_80MS	0 or 8

RESERVED	0-7 (if needed)

CODE_TYPE - Coding type indicator.

If the following corresponding gain adjustment fields apply for the convolutonal code, the base station shall set this field to ‘0’. If the following corresponding gain adjustment fields apply for the Turbo code, the base station shall set this field to ‘1’.

RL_ATT_ADJ_GAIN_TYPE - Reverse Link Attribute adjustment Gain value type indicator.

If the following corresponding gain adjustment fields are set to the value of the nominal attribute gain adjustment that the mobile station is to make for the corresponding transmission attributes (relative to Nominal_Attribute_Gain specified in [2]), the base station shall set this field to ‘0’. If the following corresponding gain adjustment fields are set to the value of the pilot reference level adjustment that the mobile station is to use for the corresponding transmission attributes (relative to Pilot_Reference_Level specified in [2]), the base station shall set this field to ‘1’.

RC3_RC5_20MS_INCL - Reverse Link Attribute Adjustment Gain for Radio Configuration 3 or 5 of 20ms frame included indicator.

If Reverse Link Attribute Adjustment Gain for Radio Configuration 3 or 5 of 20ms frame is included in this message, the base station shall set this field to ‘1’; otherwise, the base station shall set this field to ‘0’.

RL_ATT_ADJ_GAIN_19200 - Reverse Link Attribute Adjustment Gain for the transmission rate 19200 bits/s.

If RC3_RC5_20MS_INCL is set to ‘0’, the base station shall omit this field.

If RC3_RC5_20MS_INCL is set to ‘1’ and RL_ATT_ADJ_GAIN_TYPE is set to ‘0’, the base station shall set this field to the value of the nominal attribute gain adjustment that the mobile station is to make for the transmission attributes with transmission rate 19200 bits/s, and 20ms frame. The base station shall set the value in the range from –48 to 48 inclusive.

If RC3_RC5_20MS_INCL is set to ‘1’ and RL_ATT_ADJ_GAIN_TYPE is set to ‘1’, the base station shall set this field to the value of the pilot reference level adjustment that the mobile station is to make for the transmission attributes with transmission rate 19200 bits/s and 20ms frame.

The base station shall set this field to the correction factor expressed as a two’s complement value in units of 0.125 dB.

RL_ATT_ADJ_GAIN_38400 - Reverse Link Attribute Adjustment Gain for the transmission rate 38400 bits/s.

If RC3_RC5_20MS_INCL is set to ‘0’, the base station shall omit this field.

If RC3_RC5_20MS_INCL is set to ‘1’ and RL_ATT_ADJ_GAIN_TYPE is set to ‘0’, the base station shall set this field to the value of the nominal attribute gain adjustment that the mobile station is to make for the transmission attributes with transmission rate 38400 bits/s, and 20ms frame. The base station shall set the value in the range from –48 to 48 inclusive.

If RC3_RC5_20MS_INCL is set to ‘1’ and NORM_ATT_GAIN_TYPE is set to ‘1’, the base station shall set this field to the value of the pilot reference level adjustment that the mobile station is to make for the transmission attributes with transmission rate 38400 bits/s and 20ms frame.

The base station shall set this field to the correction factor expressed as a two’s complement value in units of 0.125 dB.

RL_ATT_ADJ_GAIN_76800 - Reverse Link Attribute Adjustment Gain for the transmission rate 76800 bits/s.

If RC3_RC5_20MS_INCL is set to ‘0’, the base station shall omit this field.

If RC3_RC5_20MS_INCL is set to '1' and RL_ATT_ADJ_GAIN_TYPE is set to '0', the base station shall set this field to the value of the nominal attribute gain adjustment that the mobile station is to make for the transmission attributes with transmission rate 76800 bits/s, and 20ms frame. The base station shall set the value in the range from –48 to 48 inclusive.

If RC3_RC5_20MS_INCL is set to '1' and RL_ATT_ADJ_GAIN_TYPE is set to '1', the base station shall set this field to the value of the pilot reference level adjustment that the mobile station is to make for the transmission attributes with transmission rate 76800 bits/s and 20ms frame.

The base station shall set this field to the correction factor expressed as a two's complement value in units of 0.125 dB.

RL_ATT_ADJ_GAIN_153600 - Reverse Link Attribute Adjustment Gain for the transmission rate 153600 bits/s.

If RC3_RC5_20MS_INCL is set to '0', the base station shall omit this field.

If RC3_RC5_20MS_INCL is set to '1' and NORM_ATT_GAIN_TYPE is set to '0', the base station shall set this field to the value of the nominal attribute gain adjustment that the mobile station is to make for the transmission attributes with transmission rate 153600 bits/s, and 20ms frame. The base station shall set the value in the range from –48 to 48 inclusive.

If RC3_RC5_20MS_INCL is set to '1' and NORM_ATT_GAIN_TYPE is set to '1', the base station shall set this field to the value of the pilot reference level adjustment that the mobile station is to make for the transmission attributes with transmission rate 153600 bits/s and 20ms frame.

The base station shall set this field to the correction factor expressed as a two's complement value in units of 0.125 dB.

RL_ATT_ADJ_GAIN_307200 - Reverse Link Attribute Adjustment Gain for the transmission rate 307200 bits/s.

If RC3_RC5_20MS_INCL is set to '0', the base station shall omit this field.

If RC3_RC5_20MS_INCL is set to '1' and RL_ATT_ADJ_GAIN_TYPE is set to '0', the base station shall set this field to the value of the nominal attribute gain adjustment that the mobile station is to make for the transmission attributes with transmission rate 307200 bits/s, and 20ms frame. The base station shall set the value in the range from –48 to 48 inclusive.

If RC3_RC5_20MS_INCL is set to '1' and RL_ATT_ADJ_GAIN_TYPE is set to '1', the base station shall set this field to the value of the pilot reference level adjustment that the mobile station is to make for the transmission attributes with transmission rate 307200 bits/s and 20ms frame.

The base station shall set this field to the correction factor expressed as a two's complement value in units of 0.125 dB.

RL_ATT_ADJ_GAIN_614400 - Reverse Link Attribute Adjustment Gain for the transmission rate 614400 bits/s.

If RC3_RC5_20MS_INCL is set to '0', the base station shall omit this field.

If RC3_RC5_20MS_INCL is set to '1' and RL_ATT_ADJ_GAIN_TYPE is set to '0', the base station shall set this field to the value of the nominal attribute gain adjustment that the mobile station is to make for the transmission attributes with transmission rate 614400 bits/s, and 20ms frame. The base station shall set the value in the range from –48 to 48 inclusive.

If RC3_RC5_20MS_INCL is set to '1' and RL_ATT_ADJ_GAIN_TYPE is set to '1', the base station shall set this field to the value of the pilot reference level adjustment that the mobile station is to make for the transmission attributes with transmission rate 614400 bits/s and 20ms frame.

The base station shall set this field to the correction factor expressed as a two's complement value in units of 0.125 dB.

RC4_RC6_20MS_INCL - Reverse Link Attribute Adjustment Gain for Radio Configuration 4 or 6 of 20ms frame included indicator.

If Reverse Link Attribute Adjustment Gain for Radio Configuration 4 or 6 of 20ms frame is included in this message, the base station shall set this field to '1'; otherwise, the base station shall set this field to '0'.

RL_ATT_ADJ_GAIN_28800 - Reverse Link Attribute Adjustment Gain for the transmission rate 28800 bits/s.

If RC4_RC6_20MS_INCL is set to '0', the base station shall omit this field.

If RC4_RC6_20MS_INCL is set to '1' and RL_ATT_ADJ_GAIN_TYPE is set to '0', the base station shall set this field to the value of the nominal attribute gain adjustment that the mobile station is to make for the transmission attributes with transmission rate 28800 bits/s, and 20ms frame. The base station shall set the value in the range from –48 to 48 inclusive.

If RC4_RC6_20MS_INCL is set to '1' and NORM_ATT_GAIN_TYPE is set to '1', the base station shall set this field to the value of the pilot reference level adjustment that the mobile station is to make for the transmission attributes with transmission rate 28800 bits/s and 20ms frame.

The base station shall set this field to the correction factor expressed as a two's complement value in units of 0.125 dB.

RL_ATT_ADJ_GAIN_57600 - Reverse Link Attribute Adjustment Gain for the transmission rate 57600 bits/s.

If RC4_RC6_20MS_INCL is set to '0', the base station shall omit this field.

If RC4_RC6_20MS_INCL is set to '1' and NORM_ATT_GAIN_TYPE is set to '0', the base station shall set this field to the value of the nominal attribute gain adjustment that the mobile station is to make for the transmission attributes with transmission rate 57600 bits/s, and 20ms frame. The base station shall set the value in the range from –48 to 48 inclusive.

If RC4_RC6_20MS_INCL is set to '1' and NORM_ATT_GAIN_TYPE is set to '1', the base station shall set this field to the value of the pilot reference level adjustment that the mobile station is to make for the transmission attributes with transmission rate 57600 bits/s and 20ms frame.

The base station shall set this field to the correction factor expressed as a two's complement value in units of 0.125 dB.

RL_ATT_ADJ_GAIN_115200 - Reverse Link Attribute Adjustment Gain for the transmission rate 115200 bits/s.

If RC4_RC6_20MS_INCL is set to '0', the base station shall omit this field.

If RC4_RC6_20MS_INCL is set to '1' and RL_ATT_ADJ_GAIN_TYPE is set to '0', the base station shall set this field to the value of the nominal attribute gain adjustment that the mobile station is to make for the transmission attributes with transmission rate 115200 bits/s, and 20ms frame. The base station shall set the value in the range from –48 to 48 inclusive.

If RC4_RC6_20MS_INCL is set to '1' and RL_ATT_ADJ_GAIN_TYPE is set to '1', the base station shall set this field to the value of the pilot reference level adjustment that the mobile station is to make for the transmission attributes with transmission rate 115200 bits/s and 20ms frame.

The base station shall set this field to the correction factor expressed as a two's complement value in units of 0.125 dB.

RL_ATT_ADJ_GAIN_230400 - Reverse Link Attribute Adjustment Gain for the transmission rate 230400 bits/s.

If RC4_RC6_20MS_INCL is set to ‘0’, the base station shall omit this field.

If RC4_RC6_20MS_INCL is set to ‘1’ and RL_ATT_ADJ_GAIN_TYPE is set to ‘0’, the base station shall set this field to the value of the nominal attribute gain adjustment that the mobile station is to make for the transmission attributes with transmission rate 230400 bits/s, and 20ms frame. The base station shall set the value in the range from –48 to 48 inclusive.

If RC4_RC6_20MS_INCL is set to ‘1’ and RL_ATT_ADJ_GAIN_TYPE is set to ‘1’, the base station shall set this field to the value of the pilot reference level adjustment that the mobile station is to make for the transmission attributes with transmission rate 230400 bits/s and 20ms frame.

The base station shall set this field to the correction factor expressed as a two’s complement value in units of 0.125 dB.

RL_ATT_ADJ_GAIN_460800 - Reverse Link Attribute Adjustment Gain for the transmission rate 460800 bits/s.

If RC4_RC6_20MS_INCL is set to ‘0’, the base station shall omit this field.

If RC4_RC6_20MS_INCL is set to ‘1’ and RL_ATT_ADJ_GAIN_TYPE is set to ‘0’, the base station shall set this field to the value of the nominal attribute gain adjustment that the mobile station is to make for the transmission attributes with transmission rate 460800 bits/s, and 20ms frame. The base station shall set the value in the range from –48 to 48 inclusive.

If RC4_RC6_20MS_INCL is set to ‘1’ and RL_ATT_ADJ_GAIN_TYPE is set to ‘1’, the base station shall set this field to the value of the pilot reference level adjustment that the mobile station is to make for the transmission attributes with transmission rate 460800 bits/s and 20ms frame.

The base station shall set this field to the correction factor expressed as a two’s complement value in units of 0.125 dB.

RL_ATT_ADJ_GAIN_1036800- Reverse Link Attribute Adjustment Gain for the transmission rate 1036800 bits/s.

If RC4_RC6_20MS_INCL is set to ‘0’, the base station shall omit this field.

If RC4_RC6_20MS_INCL is set to ‘1’ and RL_ATT_ADJ_GAIN_TYPE is set to ‘0’, the base station shall set this field to the value of the nominal attribute gain adjustment that the mobile station is to make for the transmission attributes with transmission rate 1036800 bits/s, and 20ms frame. The base station shall set the value in the range from –48 to 48 inclusive.

If RC4_RC6_20MS_INCL is set to '1' and RL_ATT_ADJ_GAIN_TYPE is set to '1', the base station shall set this field to the value of the pilot reference level adjustment that the mobile station is to make for the transmission attributes with transmission rate 1306800 bits/s and 20ms frame.

The base station shall set this field to the correction factor expressed as a two's complement value in units of 0.125 dB.

RC3_RC5_40MS_INCL - Reverse Link Attribute Adjustment Gain for Radio Configuration 3 or 5 of 40ms frame included indicator.

If Reverse Link Attribute Adjustment Gain for Radio Configuration 3 or 5 of 40ms frame is included in this message, the base station shall set this field to '1'; otherwise, the base station shall set this field to '0'.

RL_ATT_ADJ_GAIN_19200_40MS - Reverse Link Attribute Adjustment Gain for the transmission rate 19200 bits/s.

If RC3_RC5_40MS_INCL is set to '0', the base station shall omit this field.

If RC3_RC5_40MS_INCL is set to '1' and RL_ATT_ADJ_GAIN_TYPE is set to '0', the base station shall set this field to the value of the nominal attribute gain adjustment that the mobile station is to make for the transmission attributes with transmission rate 19200 bits/s, and 40ms frame. The base station shall set the value in the range from –48 to 48 inclusive.

If RC3_RC5_40MS_INCL is set to '1' and RL_ATT_ADJ_GAIN_TYPE is set to '1', the base station shall set this field to the value of the pilot reference level adjustment that the mobile station is to make for the transmission attributes with transmission rate 19200 bits/s and 40ms frame.

The base station shall set this field to the correction factor expressed as a two's complement value in units of 0.125 dB.

RL_ATT_ADJ_GAIN_38400_40MS - Reverse Link Attribute Adjustment Gain for the transmission rate 38400 bits/s.

If RC3_RC5_40MS_INCL is set to '0', the base station shall omit this field.

If RC3_RC5_40MS_INCL is set to '1' and RL_ATT_ADJ_GAIN_TYPE is set to '0', the base station shall set this field to the value of the nominal attribute gain adjustment that the mobile station is to make for the transmission attributes with transmission rate 38400 bits/s, and 40ms frame. The base station shall set the value in the range from –48 to 48 inclusive.

If RC3_RC5_20MS_INCL is set to '1' and NORM_ATT_GAIN_TYPE is set to '1', the base station shall set this field to the value of the pilot reference level adjustment that the mobile station is to make for the transmission attributes with transmission rate 38400 bits/s and 40ms frame.

The base station shall set this field to the correction factor expressed as a two's complement value in units of 0.125 dB.

RL_ATT_ADJ_GAIN_76800_40MS - Reverse Link Attribute Adjustment Gain for the transmission rate 76800 bits/s.

If RC3_RC5_40MS_INCL is set to '0', the base station shall omit this field.

If RC3_RC5_40MS_INCL is set to '1' and RL_ATT_ADJ_GAIN_TYPE is set to '0', the base station shall set this field to the value of the nominal attribute gain adjustment that the mobile station is to make for the transmission attributes with transmission rate 76800 bits/s, and 40ms frame. The base station shall set the value in the range from –48 to 48 inclusive.

If RC3_RC5_40MS_INCL is set to '1' and RL_ATT_ADJ_GAIN_TYPE is set to '1', the base station shall set this field to the value of the pilot reference level adjustment that the mobile station is to make for the transmission attributes with transmission rate 76800 bits/s and 40ms frame.

The base station shall set this field to the correction factor expressed as a two's complement value in units of 0.125 dB.

RL_ATT_ADJ_GAIN_153600_40MS - Reverse Link Attribute Adjustment Gain for the transmission rate 153600 bits/s.

If RC3_RC5_40MS_INCL is set to '0', the base station shall omit this field.

If RC3_RC5_40MS_INCL is set to '1' and NORM_ATT_GAIN_TYPE is set to '0', the base station shall set this field to the value of the nominal attribute gain adjustment that the mobile station is to make for the transmission attributes with transmission rate 153600 bits/s, and 40ms frame. The base station shall set the value in the range from –48 to 48 inclusive.

If RC3_RC5_40MS_INCL is set to '1' and NORM_ATT_GAIN_TYPE is set to '1', the base station shall set this field to the value of the pilot reference level adjustment that the mobile station is to make for the transmission attributes with transmission rate 153600 bits/s and 40ms frame.

The base station shall set this field to the correction factor expressed as a two's complement value in units of 0.125 dB.

RL_ATT_ADJ_GAIN_307200_40MS - Reverse Link Attribute Adjustment Gain for the transmission rate 307200 bits/s.

If RC3_RC5_40MS_INCL is set to ‘0’, the base station shall omit this field.

If RC3_RC5_40MS_INCL is set to ‘1’ and RL_ATT_ADJ_GAIN_TYPE is set to ‘0’, the base station shall set this field to the value of the nominal attribute gain adjustment that the mobile station is to make for the transmission attributes with transmission rate 307200 bits/s, and 40ms frame. The base station shall set the value in the range from –48 to 48 inclusive.

If RC3_RC5_40MS_INCL is set to ‘1’ and RL_ATT_ADJ_GAIN_TYPE is set to ‘1’, the base station shall set this field to the value of the pilot reference level adjustment that the mobile station is to make for the transmission attributes with transmission rate 307200 bits/s and 40ms frame.

The base station shall set this field to the correction factor expressed as a two’s complement value in units of 0.125 dB.

RC4_RC6_40MS_INCL - Reverse Link Attribute Adjustment Gain for Radio Configuration 4 or 6 of 40ms frame included indicator.

If Reverse Link Attribute Adjustment Gain for Radio Configuration 4 or 6 of 40ms frame is included in this message, the base station shall set this field to ‘1’; otherwise, the base station shall set this field to ‘0’.

RL_ATT_ADJ_GAIN_28800_40MS - Reverse Link Attribute Adjustment Gain for the transmission rate 28800 bits/s.

If RC4_RC6_40MS_INCL is set to ‘0’, the base station shall omit this field.

If RC4_RC6_40MS_INCL is set to ‘1’ and RL_ATT_ADJ_GAIN_TYPE is set to ‘0’, the base station shall set this field to the value of the nominal attribute gain adjustment that the mobile station is to make for the transmission attributes with transmission rate 28800 bits/s, and 40ms frame. The base station shall set the value in the range from –48 to 48 inclusive.

If RC4_RC6_40MS_INCL is set to ‘1’ and NORM_ATT_GAIN_TYPE is set to ‘1’, the base station shall set this field to the value of the pilot reference level adjustment that the mobile station is to make for the transmission attributes with transmission rate 28800 bits/s and 40ms frame.

The base station shall set this field to the correction factor expressed as a two’s complement value in units of 0.125 dB.

RL_ATT_ADJ_GAIN_57600_40MS - Reverse Link Attribute Adjustment Gain for the transmission rate 57600 bits/s.

If RC4_RC6_40MS_INCL is set to ‘0’, the base station shall omit this field.

If RC4_RC6_40MS_INCL is set to '1' and NORM_ATT_GAIN_TYPE is set to '0', the base station shall set this field to the value of the nominal attribute gain adjustment that the mobile station is to make for the transmission attributes with transmission rate 57600 bits/s, and 40ms frame. The base station shall set the value in the range from –48 to 48 inclusive.

If RC4_RC6_40MS_INCL is set to '1' and NORM_ATT_GAIN_TYPE is set to '1', the base station shall set this field to the value of the pilot reference level adjustment that the mobile station is to make for the transmission attributes with transmission rate 57600 bits/s and 40ms frame.

The base station shall set this field to the correction factor expressed as a two's complement value in units of 0.125 dB.

RL_ATT_ADJ_GAIN_115200_40MS - Reverse Link Attribute Adjustment Gain for the transmission rate 115200 bits/s.

If RC4_RC6_40MS_INCL is set to '0', the base station shall omit this field.

If RC4_RC6_40MS_INCL is set to '1' and RL_ATT_ADJ_GAIN_TYPE is set to '0', the base station shall set this field to the value of the nominal attribute gain adjustment that the mobile station is to make for the transmission attributes with transmission rate 115200 bits/s, and 40ms frame. The base station shall set the value in the range from –48 to 48 inclusive.

If RC4_RC6_40MS_INCL is set to '1' and RL_ATT_ADJ_GAIN_TYPE is set to '1', the base station shall set this field to the value of the pilot reference level adjustment that the mobile station is to make for the transmission attributes with transmission rate 115200 bits/s and 40ms frame.

The base station shall set this field to the correction factor expressed as a two's complement value in units of 0.125 dB.

RL_ATT_ADJ_GAIN_230400_40MS - Reverse Link Attribute Adjustment Gain for the transmission rate 230400 bits/s.

If RC4_RC6_40MS_INCL is set to '0', the base station shall omit this field.

If RC4_RC6_40MS_INCL is set to '1' and RL_ATT_ADJ_GAIN_TYPE is set to '0', the base station shall set this field to the value of the nominal attribute gain adjustment that the mobile station is to make for the transmission attributes with transmission rate 230400 bits/s, and 40ms frame. The base station shall set the value in the range from –48 to 48 inclusive.

If RC4_RC6_40MS_INCL is set to '1' and RL_ATT_ADJ_GAIN_TYPE is set to '1', the base station shall set this field to the value of the pilot reference level adjustment that the mobile station is to make for the transmission attributes with transmission rate 230400 bits/s and 40ms frame.

The base station shall set this field to the correction factor expressed as a two's complement value in units of 0.125 dB.

RL_ATT_ADJ_GAIN_518400_40MS - Reverse Link Attribute Adjustment Gain for the transmission rate 518400 bits/s.

If RC4_RC6_40MS_INCL is set to '0', the base station shall omit this field.

If RC4_RC6_40MS_INCL is set to '1' and RL_ATT_ADJ_GAIN_TYPE is set to '0', the base station shall set this field to the value of the nominal attribute gain adjustment that the mobile station is to make for the transmission attributes with transmission rate 518400 bits/s, and 40ms frame. The base station shall set the value in the range from –48 to 48 inclusive.

If RC4_RC6_40MS_INCL is set to '1' and RL_ATT_ADJ_GAIN_TYPE is set to '1', the base station shall set this field to the value of the pilot reference level adjustment that the mobile station is to make for the transmission attributes with transmission rate 518400 bits/s and 40ms frame.

The base station shall set this field to the correction factor expressed as a two's complement value in units of 0.125 dB.

RC3_RC5_80MS_INCL - Reverse Link Attribute Adjustment Gain for Radio Configuration 3 or 5 of 80ms frame included indicator.

If Reverse Link Attribute Adjustment Gain for Radio Configuration 3 or 5 of 80ms frame is included in this message, the base station shall set this field to '1'; otherwise, the base station shall set this field to '0'.

RL_ATT_ADJ_GAIN_19200_80MS - Reverse Link Attribute Adjustment Gain for the transmission rate 19200 bits/s.

If RC3_RC5_80MS_INCL is set to '0', the base station shall omit this field.

If RC3_RC5_80MS_INCL is set to '1' and RL_ATT_ADJ_GAIN_TYPE is set to '0', the base station shall set this field to the value of the nominal attribute gain adjustment that the mobile station is to make for the transmission attributes with transmission rate 19200 bits/s, and 80ms frame. The base station shall set the value in the range from –48 to 48 inclusive.

If RC3_RC5_80MS_INCL is set to '1' and RL_ATT_ADJ_GAIN_TYPE is set to '1', the base station shall set this field to the value of the pilot reference level adjustment that the mobile station is to make for the transmission attributes with transmission rate 19200 bits/s and 80ms frame.

The base station shall set this field to the correction factor expressed as a two's complement value in units of 0.125 dB.

RL_ATT_ADJ_GAIN_38400_80MS - Reverse Link Attribute Adjustment Gain for the transmission rate 38400 bits/s.

If RC3_RC5_80MS_INCL is set to '0', the base station shall omit this field.

If RC3_RC5_80MS_INCL is set to '1' and RL_ATT_ADJ_GAIN_TYPE is set to '0', the base station shall set this field to the value of the nominal attribute gain adjustment that the mobile station is to make for the transmission attributes with transmission rate 38400 bits/s, and 80ms frame. The base station shall set the value in the range from –48 to 48 inclusive.

If RC3_RC5_80MS_INCL is set to '1' and NORM_ATT_GAIN_TYPE is set to '1', the base station shall set this field to the value of the pilot reference level adjustment that the mobile station is to make for the transmission attributes with transmission rate 38400 bits/s and 80ms frame.

The base station shall set this field to the correction factor expressed as a two's complement value in units of 0.125 dB.

RL_ATT_ADJ_GAIN_76800_80MS - Reverse Link Attribute Adjustment Gain for the transmission rate 76800 bits/s.

If RC3_RC5_80MS_INCL is set to '0', the base station shall omit this field.

If RC3_RC5_80MS_INCL is set to '1' and RL_ATT_ADJ_GAIN_TYPE is set to '0', the base station shall set this field to the value of the nominal attribute gain adjustment that the mobile station is to make for the transmission attributes with transmission rate 76800 bits/s, and 80ms frame. The base station shall set the value in the range from –48 to 48 inclusive.

If RC3_RC5_80MS_INCL is set to '1' and RL_ATT_ADJ_GAIN_TYPE is set to '1', the base station shall set this field to the value of the pilot reference level adjustment that the mobile station is to make for the transmission attributes with transmission rate 76800 bits/s and 80ms frame.

The base station shall set this field to the correction factor expressed as a two's complement value in units of 0.125 dB.

RL_ATT_ADJ_GAIN_153600_80MS - Reverse Link Attribute Adjustment Gain for the transmission rate 153600 bits/s.

If RC3_RC5_80MS_INCL is set to ‘0’, the base station shall omit this field.

If RC3_RC5_80MS_INCL is set to ‘1’ and RL_ATT_ADJ_GAIN_TYPE is set to ‘0’, the base station shall set this field to the value of the nominal attribute gain adjustment that the mobile station is to make for the transmission attributes with transmission rate 153600 bits/s, and 80ms frame. The base station shall set the value in the range from –48 to 48 inclusive.

If RC3_RC5_80MS_INCL is set to ‘1’ and RL_ATT_ADJ_GAIN_TYPE is set to ‘1’, the base station shall set this field to the value of the pilot reference level adjustment that the mobile station is to make for the transmission attributes with transmission rate 153600 bits/s and 80ms frame.

The base station shall set this field to the correction factor expressed as a two’s complement value in units of 0.125 dB.

RC4_RC6_80MS_INCL - Reverse Link Attribute Adjustment Gain for Radio Configuration 4 or 6 of 80ms frame included indicator.

If Reverse Link Attribute Adjustment Gain for Radio Configuration 4 or 6 of 80ms frame is included in this message, the base station shall set this field to ‘1’; otherwise, the base station shall set this field to ‘0’.

RL_ATT_ADJ_GAIN_28800_80MS - Reverse Link Attribute Adjustment Gain for the transmission rate 28800 bits/s.

If RC4_RC6_80MS_INCL is set to ‘0’, the base station shall omit this field.

If RC4_RC6_80MS_INCL is set to ‘1’ and RL_ATT_ADJ_GAIN_TYPE is set to ‘0’, the base station shall set this field to the value of the nominal attribute gain adjustment that the mobile station is to make for the transmission attributes with transmission rate 28800 bits/s, and 80ms frame. The base station shall set the value in the range from –48 to 48 inclusive.

If RC4_RC6_80MS_INCL is set to ‘1’ and NORM_ATT_GAIN_TYPE is set to ‘1’, the base station shall set this field to the value of the pilot reference level adjustment that the mobile station is to make for the transmission attributes with transmission rate 28800 bits/s and 80ms frame.

The base station shall set this field to the correction factor expressed as a two’s complement value in units of 0.125 dB.

RL_ATT_ADJ_GAIN_57600_80MS - Reverse Link Attribute Adjustment Gain for the transmission rate 57600 bits/s.

If RC4_RC6_80MS_INCL is set to ‘0’, the base station shall omit this field.

If RC4_RC6_80MS_INCL is set to '1' and NORM_ATT_GAIN_TYPE is set to '0', the base station shall set this field to the value of the nominal attribute gain adjustment that the mobile station is to make for the transmission attributes with transmission rate 57600 bits/s, and 80ms frame. The base station shall set the value in the range from –48 to 48 inclusive.

If RC4_RC6_80MS_INCL is set to '1' and NORM_ATT_GAIN_TYPE is set to '1', the base station shall set this field to the value of the pilot reference level adjustment that the mobile station is to make for the transmission attributes with transmission rate 57600 bits/s and 80ms frame.

The base station shall set this field to the correction factor expressed as a two's complement value in units of 0.125 dB.

RL_ATT_ADJ_GAIN_115200_80MS - Reverse Link Attribute Adjustment Gain for the transmission rate 115200 bits/s.

If RC4_RC6_80MS_INCL is set to '0', the base station shall omit this field.

If RC4_RC6_80MS_INCL is set to '1' and RL_ATT_ADJ_GAIN_TYPE is set to '0', the base station shall set this field to the value of the nominal attribute gain adjustment that the mobile station is to make for the transmission attributes with transmission rate 115200 bits/s, and 80ms frame. The base station shall set the value in the range from –48 to 48 inclusive.

If RC4_RC6_80MS_INCL is set to '1' and RL_ATT_ADJ_GAIN_TYPE is set to '1', the base station shall set this field to the value of the pilot reference level adjustment that the mobile station is to make for the transmission attributes with transmission rate 115200 bits/s and 80ms frame.

The base station shall set this field to the correction factor expressed as a two's complement value in units of 0.125 dB.

RL_ATT_ADJ_GAIN_259200_80MS - Reverse Link Attribute Adjustment Gain for the transmission rate 259200 bits/s.

If RC4_RC6_80MS_INCL is set to '0', the base station shall omit this field.

If RC4_RC6_80MS_INCL is set to '1' and RL_ATT_ADJ_GAIN_TYPE is set to '0', the base station shall set this field to the value of the nominal attribute gain adjustment that the mobile station is to make for the transmission attributes with transmission rate 259200 bits/s, and 80ms frame. The base station shall set the value in the range from –48 to 48 inclusive.

If RC4_RC6_80MS_INCL is set to '1' and RL_ATT_ADJ_GAIN_TYPE is set to '1', the base station shall set this field to the value of the pilot reference level adjustment that the mobile station is to make for the transmission attributes with transmission rate 259200 bits/s and 80ms frame.

The base station shall set this field to the correction factor expressed as a two's complement value in units of 0.125 dB.

RESERVED - Reserved bits.

The base station shall add reserved bits as needed in order to make the length of the entire record equal to an integer number of octets. The base station shall set these bits to '0'.

If RPC_ADJ_REC_TYPE is equal to '0011', the base station shall set type-specific fields as specified in Table 3.7.3.3.2.25-7.

Table 3.7.3.3.2.25-7. Type Specific Fields for RECORD_TYPE = '0011'

Fields	Length (Bits)
RL_CQICH_ATT_ADJ_GAIN_TYPE	1
RL_CQICH_ATT_ADJ_GAIN_HIGH_INCL	1
RL_CQICH_ATT_ADJ_GAIN_HIGH	0 or 8
RL_CQICH_ATT_ADJ_GAIN_LOW_INCL	1
RL_CQICH_ATT_ADJ_GAIN_LOW	0 or 8
RESERVED	0-7 (if needed)

RL_CQICH_ATT_ADJ_GAIN_TYPE - Reverse Channel Quality Indicator Channel attribute adjustment gain value type indicator

If the following fields are set to the nominal attribute gain adjustment values that the mobile station is to use for the transmission attributes (relative to Nominal_Attribute_Gain specified in [2]), the base station shall set this field to '0'. If the following fields are set to the pilot reference level adjustment values that the mobile station is to use for the transmission attributes (relative to Pilot_Reference Level specified in [2]), the base station shall set this field to '1'.

RL_CQICH_ATT_ADJ_GAIN_HIGH_INCL - Reverse Channel Quality Indicator Channel attribute adjustment gain for the high power level included indicator.

If the attribute adjustment gain for the high power level of Reverse Channel Quality Indicator Channel transmission is included in this message, the base station shall set this field to '1'; otherwise, the base station shall set this field to '0'.

RL_CQICH_ATT_ADJ_GAIN_HIGH - Attribute adjustment gain for Reverse Channel Quality Indicator Channel for the high Channel Quality Indicator gain power level.

If RL_CQICH_ATT_ADJ_GAIN_HIGH_INCL is set to '0', the base station shall omit this field; otherwise, the base station shall set this field as follows:

If RL_CQICH_ATT_ADJ_GAIN_TYPE is set to '0', the base station shall set this field to the value of the nominal attribute gain adjustment that the mobile station is to make for the transmission attributes for the high power level of R-CQICH. The base station shall set the value in the range from –40 to 16 inclusive.

If RL_CQICH_ATT_ADJ_GAIN_TYPE is set to '1', the base station shall set this field to the value of the pilot reference level adjustment that the mobile station is to make for the transmission attributes for the high power level of R-CQICH.

The base station shall set this field to the correction factor expressed as a two's complement value in units of 0.125 dB.

RL_CQICH_ATT_ADJ_GAIN_LOW_INCL - Reverse Channel Quality Indicator Channel attribute adjustment gain for the low power level included indicator.

If the attribute adjustment gain for the low power level of Reverse Channel Quality Indicator Channel transmission is included in this message, the base station shall set this field to '1'; otherwise, the base station shall set this field to '0'.

RL_CQICH_ATT_ADJ_GAIN_LOW - Attribute adjustment gain for Reverse Channel Quality Indicator Channel for the low Channel Quality Indicator gain power level.

If RL_CQICH_ATT_ADJ_GAIN_LOW_INCL is set to '0', the base station shall omit this field; otherwise, the base station shall set this field as follows:

If RL_CQICH_ATT_ADJ_GAIN_TYPE is set to '0', the base station shall set this field to the value of the nominal attribute gain adjustment that the mobile station is to make for the transmission attributes for the low power level of R-CQICH. The base station shall set the value in the range from –16 to 16 inclusive.

If RL_CQICH_ATT_ADJ_GAIN_TYPE is set to '1', the base station shall set this field to the value of the pilot reference level adjustment that the mobile station is to make for the transmission attributes for the low power level of R-CQICH.

The base station shall set this field to the correction factor expressed as a two's complement value in units of 0.125 dB.

If RPC_ADJ_REC_TYPE is equal to '0100', the base station shall set type-specific fields as specified in Table 3.7.3.3.2.25-8.

Table 3.7.3.3.2.25-8. Type Specific Fields for

RECORD_TYPE = '0100'

Fields	Length (Bits)
REV_REQCH_ADJ_INCL	1
REV_REQCH_ADJ_GAIN	0 or 8
REV_SPICH_ADJ_INCL	1
REV_SPICH_ADJ_GAIN	0 or 8
REV_SPICH_EP_SIZE	0 or 4
REV_PDCCH_ADJ_INCL	1
REV_PDCCH_ADJ_GAIN	0 or 8
REV_PDCCH_ATTRIBUTE_ADJ_INCL	1
REV_PDCCH_EP_SIZE_NUM	0 or 4
{ (REV_PDCCH_EP_SIZE_NUM +1)	
{ (2)	
REV_PDCCH_ATTRIBUTE_ADJ_GAIN	8
} (2)	
} (REV_PDCCH_EP_SIZE_NUM +1)	
REV_PDCCH_BOOST_ADJ_INCL	1
{ (2)	
REV_PDCCH_BOOST_ADJ_GAIN	0 or 8
} (2)	
REV_PDCCH_PAYLOAD_ADJ_INCL	1
REV_PDCCH_EP_SIZE_NUM_1	0 or 4
{ (REV_PDCCH_EP_SIZE_NUM_1 +1)	
REV_PDCCH_PAYLOAD_ADJ_GAIN	8
} (REV_PDCCH_EP_SIZE_NUM_1 +1)	
REV_PDCH_ADJ_INCL	1
REV_PDCH_ADJ_GAIN	0 or 8
REV_PDCH_PAYLOAD_ADJ_INCL	1
REV_PDCH_EP_SIZE_NUM	0 or 4
{ (REV_PDCH_EP_SIZE_NUM +1)	
REV_PDCH_PAYLOAD_ADJ_GAIN	8
} (REV_PDCH_EP_SIZE_NUM +1)	
REV_PDCH_BOOST_ADJ_INCL	1
{ (2)	
REV_PDCH_BOOST_ADJ_GAIN	8

} (2)

REV_PDCH_SUBPACKET_ADJ_INCL	1
REV_PDCH_RETRX_NUM	0 or 2

{ (REV_PDCH_RETRX_NUM+1)

REV_PDCH_SUBPACKET_ADJ_GAIN	8

} (REV_PDCH_RETRX_NUM+1)

REV_PDCH_ATTRIBUTE_ADJ_INCL	1
REV_PDCH_EP_SIZE_NUM_1	0 or 4
REV_PDCH_RETRX_NUM_1	0 or 2

{ (REV_PDCH_EP_SIZE_NUM_1+1)

{ (REV_PDCH_RETRX_NUM_1+1)

{ (2)

REV_PDCH_ATTRIBUTE_ADJ_GAIN	8

} (2)

} (REV_PDCH_RETRX_NUM_1+1)

} (REV_PDCH_EP_SIZE_NUM_1 +1)

RESERVED	0-7 (if needed)

REV_REQCH_ADJ_INCL - Reverse Request Channel Adjustment included field.

If the attribute adjustment gains for the Reverse Request Channel are included in this message, the base station shall set this field to ‘1’; otherwise, the base station shall set this field to ‘0’.

REV_REQCH_ADJ_GAIN - Reverse Request Channel Adjustment Gain.

If REV_REQCH_ADJ_INCL is set to ‘0’, the base station shall omit this field; otherwise, the base station shall include this field, and set it as follows.

The base station shall set this field to the value of the nominal attribute gain adjustment that the mobile station is to make for the transmission attributes for the power level of R-REQCH. The base station shall set the value in the range from –24 to 40 inclusive.

The base station shall set this field to the correction factor expressed as a two’s complement value in units of 0.125 dB.

REV_SPICH_ADJ_INCL - Reverse Secondary Pilot Channel Adjustment included field.

If the attribute adjustment gains for the Reverse Secondary Pilot Channel are included in this message, the base station shall set this field to ‘1’; otherwise, the base station shall set this field to ‘0’.

REV_SPICH_ADJ_GAIN - Reverse Secondary Pilot Channel Adjustment Gain.

If REV_SPICH_ADJ_INCL is set to '0', the base station shall omit this field; otherwise, the base station shall include this field, and set it as follows.

The base station shall set this field to the value of the nominal attribute gain adjustment that the mobile station is to make for the transmission attributes for the power level of R-SPICH. The base station shall set the value in the range from –16 to 48 inclusive.

The base station shall set this field to the correction factor expressed as a two's complement value in units of 0.125 dB.

REV_SPICH_EP_SIZE - Minimum Encoder Packet Size for which the Reverse Secondary Pilot Channel is used.

If REV_SPICH_ADJ_INCL is set to '0', the base station shall omit this field; otherwise, the base station shall include this field, and set it as follows.

The base station shall set this field to the minimum encoder packet size for which the Reverse Secondary Pilot Channel is used (see [2] and [3]).

The base station shall set this field to a value in the range 0 to 10 inclusive, corresponding to the encoder packet sizes 192, 408, 792, 1560, 3096, 4632, 6168, 9240, 12312, 15384, and 18456 bits respectively.

REV_PDCCH_ADJ_INCL - Reverse Packet Data Control Channel Adjustment included field.

If the attribute adjustment gains for the Reverse Packet Data Control Channel are included in this message, the base station shall set this field to '1'; otherwise, the base station shall set this field to '0'.

REV_PDCCH_ADJ_GAIN - Reverse Packet Data Control Channel Adjustment Gain.

If REV_PDCCH_ADJ_INCL is set to '0', the base station shall omit this field; otherwise, the base station shall include this field, and set it as follows.

The base station shall set this field to the value of the nominal attribute gain adjustment that the mobile station is to make for the transmission attributes for the power level of R-PDCCH. The base station shall set the value in the range from –32 to 32 inclusive.

The base station shall set this field to the correction factor expressed as a two's complement value in units of 0.125 dB.

REV_PDCCH_ATTRIBUTE_ADJ_INCL - Reverse Packet Data Control Channel Attrribute Adjustment included field.

If the attribute adjustment gains for the Reverse Packet Data Control Channel are included per encoder packet size and per boost mode in this message, the base station shall set this field to '1'; otherwise, the base station shall set this field to '0'.

REV_PDCCH_EP_SIZE_NUM - Number of occurrences of Reverse Packet Data Control Channel Attribute Adjustment Gains.

If REV_PDCCH_ATTRIBUTE_ADJ_INCL is set to '0', the base station shall omit this field; otherwise, the base station shall include this field, and set it as follows.

The base station shall set this field to one less than half the number of occurrences of the field included hereafter. The records are listed per encoder packet size, in the following ascending order: 192, 408, 792, 1560, 3096, 4632, 6168, 9240, 12312, 15384, 18456 bits.

If REV_PDCCH_ATTRIBUTE_ADJ_INCL is set to '1', the base station shall include REV_PDCCH_EP_SIZE_NUM+1 occurrences of the following record:

The base station shall include 2 occurrences of the following field. The first occurrence of this field is for the non-boosted mode, while the second is for the boosted mode.

REV_PDCCH_ATTRIBUTE_ADJ_GAIN - Reverse Packet Data Control Channel Attribute Adjustment Gain.

The base station shall set this field to the value of the nominal attribute gain adjustment that the mobile station is to make for the transmission attributes for the power level of R-PDCCH, for the i-th encoder packet size, and for the non-boosted and boosted modes.

The base station shall set the value in the range from –32 to 32 inclusive.

The base station shall set this field to the correction factor expressed as a two's complement value in units of 0.125 dB.

REV_PDCCH_BOOST_ADJ_INCL- Reverse Packet Data Control Channel Boost Adjustment included field.

If the attribute adjustment gains for the Reverse Packet Data Control Channel per boosted mode are included in this message, the base station shall set this field to '1'; otherwise, the base station shall set this field to '0'.

If REV_PDCCH_BOOST_ADJ_INCL is set to '1", the base station shall include two occurrences of the following record:

REV_PDCCH_BOOST_ADJ_GAIN - Reverse Packet Data Control Channel Boost Adjustment Gains.

The base station shall set this field to the value of the nominal attribute gain adjustment that the mobile station is to make for the transmission attributes for the power level of R-PDCCH, for the appropriate mode. The base station shall set the value in the range from –32 to 32 inclusive.

The first occurrence of this field is for the non-boosted mode, while the second is for the boosted mode. The base station shall set this field to the correction factor expressed as a two's complement value in units of 0.125 dB.

REV_PDCCH_PAYLOAD_ADJ_INCL - Reverse Packet Data Control Channel Payload Attrribute Adjustment inclusion field.

If the attribute adjustment gains for the Reverse Packet Data Control Channel are included per encoder packet size in this message, the base station shall set this field to '1'; otherwise, the base station shall set this field to '0'.

REV_PDCCH_EP_SIZE_NUM_1 - Number of occurrences of Reverse Packet Data Control Channel Payload Attribute Adjustment Gain records.

If REV_PDCCH_PAYLOAD_ADJ_INCL is set to '0', the base station shall omit this field; otherwise, the base station shall include this field, and set it as follows.

The base station shall set this field to one less than the number of occurrences of the field included hereafter. The fields are listed per encoder packet size, in the following ascending order: 192, 408, 792, 1560, 3096, 4632, 6168, 9240, 12312, 15384, 18456 bits.

If REV_PDCCH_PAYLOAD_ADJ_INCL is set to '1', the base station shall include (REV_PDCCH_EP_SIZE_NUM_1+1) × 2 occurrences of the following record:

REV_PDCCH_PAYLOAD_ADJ_GAIN - Reverse Packet Data Control Channel Payload Attribute Adjustment Gain.

The base station shall set this field to the value of the nominal attribute gain adjustment that the mobile station is to make for the transmission attributes for the power level of R-PDCCH, for the i-th encoder packet size, and for the non-boosted and boosted modes. In each set for the i-th encoder packet, the first occurrence of this field is for the non-boosted mode, while the second is for the boosted mode.

The base station shall set the value in the range from –32 to 32 inclusive. The base station shall set this field to the correction factor expressed as a two's complement value in units of 0.125 dB.

REV_PDCH_ADJ_INCL - Reverse Packet Data Channel Adjustment included field.

If the attribute adjustment gains for the Reverse Packet Data Channelare included in this message, the base station shall set this field to '1'; otherwise, the base station shall set this field to '0'.

REV_PDCH_ADJ_GAIN - Reverse Packet Data Channel Adjustment Gain.

If REV_PDCH_ADJ_INCL is set to '0', the base station shall omit this field; otherwise, the base station shall include this field, and set it as follows.

The base station shall set this field to the value of the nominal attribute gain adjustment that the mobile station is to make for the transmission attributes for the power level of R-PDCH. The base station shall set the value in the range from –40 to 56 inclusive.

The base station shall set this field to the correction factor expressed as a two's complement value in units of 0.125 dB.

REV_PDCH_PAYLOAD_ADJ_INCL - Reverse Packet Data Channel Adjustment included field.

If the attribute adjustment gains for the Reverse Packet Data Channel are included per encoder packet size in this message, the base station shall set this field to '1'; otherwise, the base station shall set this field to '0'.

REV_PDCH_EP_SIZE_NUM - Number of occurrences of Reverse Packet Data Channel Payload Adjustment Gains.

If REV_PDCH_PAYLOAD_ADJ_INCL is set to '0', the base station shall omit this field; otherwise, the base station shall include this field, and set it as follows.

The base station shall set this field to one less than the number of occurrences of the following field. The fields are listed per encoder packet size, in the following ascending order: 192, 408, 792, 1560, 3096, 4632, 6168, 9240, 12312, 15384, 18456 bits

If REV_PDCH_PAYLOAD_ADJ_INCL is set to '1', the base station shall include REV_PDCH_EP_SIZE_NUM+1 occurrences of the following record:

REV_PDCH_PAYLOAD_ADJ_GAIN - Reverse Packet Data Channel Payload Adjustment Gain.

The base station shall set this field to the value of the nominal attribute gain adjustment that the mobile station is to make for the transmission attributes for the power level of R-PDCH, for the i-th encoder packet size. The base station shall set the value in the range from –40 to 56 inclusive.

The base station shall set this field to the correction factor expressed as a two's complement value in units of 0.125 dB.

REV_PDCH_BOOST_ADJ_INCL - Reverse Packet Data Channel Adjustment included field.

If the attribute adjustment gains for the Reverse Packet Data Channel are included per boosted mode in this message, the base station shall set this field to '1'; otherwise, the base station shall set this field to '0'.

If REV_PDCH_BOOST_ADJ_INCL is set to ‘1’, the base station shall include two occurrences of the following record. The first occurrence of this record is for the non-boosted mode, while the second is for the boosted mode.

REV_PDCH_BOOST_ADJ_GAIN - Reverse Packet Data Channel Boost-dependent Adjustment Gain.

The base station shall set this field to the value of the nominal attribute gain adjustment that the mobile station is to make for the transmission attributes for the power level of R-PDCH. The base station shall set the value in the range from –40 to 56 inclusive.

The first occurrence of this field is for the non-boosted mode, while the second is for the boosted mode. The base station shall set this field to the correction factor expressed as a two’s complement value in units of 0.125 dB.

REV_PDCH_SUBPACKET_ADJ_INCL - Reverse Packet Data Channel Subpacket Adjustment included field.

If the attribute adjustment gains for the Reverse Packet Data Channel are included per subpacket transmission round in this message, the base station shall set this field to ‘1’; otherwise, the base station shall set this field to ‘0’.

REV_PDCH_RETRX_NUM - Number of occurrences of the Reverse Packet Data Channel Subpacket Adjustment Gains.

If REV_PDCH_SUBPACKET_ADJ_INCL is set to ‘0’, the base station shall omit this field; otherwise, the base station shall include this field, and set it as follows.

The base station shall set this field to one less than the number of occurrences of the following field.

If REV_PDCH_SUBPACKET_ADJ_INCL is set to ‘1’, the base station shall include (REV_PDCH_RETRX_NUM+1) occurrences of the following record:

REV_PDCH_SUBPACKET_ADJ_GAIN - Reverse Packet Data Channel Subpacket Adjustment Gain.

The base station shall set this field to the value of the nominal attribute gain adjustment that the mobile station is to make for the transmission attributes for the power level of R-PDCH, on the i-th transmission round. The base station shall set the value in the range from –40 to 56 inclusive.

The base station shall set this field to the correction factor expressed as a two’s complement value in units of 0.125 dB.

REV_PDCH_ATTRIBUTE_ADJ_INCL - Reverse Packet Data Channel Attribute Adjustment included field.

If the attribute adjustment gains for the Reverse Packet Data Channel are included per encoder packet size and per subpacket transmission round in this message, the base station shall set this field to ‘1’; otherwise, the base station shall set this field to ‘0’.

REV_PDCH_EP_SIZE_NUM_1 - Number of occurrences of the Reverse Packet Data Channel Attribute Adjustment Gains record.

If REV_PDCH_ATTRIBUTE_ADJ_INCL is set to '0', the base station shall omit this field; otherwise, the base station shall include this field, and set it as follows.

The base station shall set this field to one less than the number of occurrences of the following subrecord. The subrecords are listed per encoder packet size, in the following ascending order: 192, 408, 792, 1560, 3096, 4632, 6168, 9240, 12312, 15384, 18456 bits.

If REV_PDCH_ATTRIBUTE_ADJ_INCL is set to '1', the base station shall include (REV_PDCH_EP_SIZE_NUM_1+1) occurrences of the following subrecord:

REV_PDCH_RETRX_NUM_1 - Number of occurrences of the Reverse Packet Data Channel Subpacket Adjustment Gains.

The base station shall set this field to one less than the number of occurrences of the Reverse Packet Data Channel Subpacket Adjustment Gains record.

The base station shall include (REV_PDCH_RETRX_NUM_1+1) occurrences of the following record:

The base station shall include 2 occurrences of the following field. The first occurrence of this field is for the non-boosted mode, while the second is for the boosted mode.

REV_PDCH_ATTRIBUTE_ADJ_GAIN - Reverse Packet Data Channel Attribute Adjustment Gain.

The base station shall set this field to the value of the nominal attribute gain adjustment that the mobile station is to make for the transmission attributes for the power level of R-PDCH, for the i-th encoder packet size on a j-th transmission round, using the non-boosted or boosted mode.

The base station shall set the value in the range from –40 to 56 inclusive. The base station shall set this field to the correction factor expressed as a two's complement value in units of 0.125 dB.

REV_PDCH_PARMS_INCL - Reverse Packet Data Channel related parameters included indicator.

The base station shall set this field to '1' if the R-PDCH parameters are included in this message; otherwise, the base station shall set this field to '0'.

REV_PDCH_NUM_ARQ_ROUNDS_NORMAL - Maximum number of allowed ARQ rounds on the Reverse PDCH in the non-boosted mode.

If REV_PDCH_PARMS_INCL is set to '0', the base station shall omit this field; otherwise, the base station shall include this field and set it as follows:

The base station shall set this field to one less the maximum number of allowed ARQ rounds on the Reverse PDCH in the non-boosted mode. The base station shall set this field to 0, 1, or 2 corresponding to 1, 2, or 3 rounds respectively (See [3]).

REV_PDCH_NUM_ARQ_ROUNDS_BOOST - Maximum number of allowed HARQ retransmissions on the Reverse PDCH in the boosted mode.

If REV_PDCH_PARMS_INCL is set to ‘0’, the base station shall omit this field; otherwise, the base station shall include this field and set it as follows:

The base station shall set this field to one less the maximum number of allowed ARQ rounds on the Reverse PDCH in the boosted mode. The base station shall set this field to 0, 1, or 2 corresponding to 1, 2, or 3 rounds respectively (See [3]).

FPC_BCMC_CHAN - Channel used for secondary power control subchannel.

If FPC_INCL is set to '1' and FPC_MODE is set to '001', '010', ‘101’, or ‘110’, the base station shall include this field and set it as follows; otherwise, the base station shall omit this field.

If F-FCH is associated with secondary power control subchannel, the base station shall set this field to ‘1’; otherwise, base station shall set this field to ‘0’ to indicate that FPC_SEC_CHAN points to the channel associated with secondary power control subchannel.

RESERVED - Reserved bits.

The base station shall add reserved bits as needed in order to make the length of the entire record equal to an integer number of octets. The base station shall set these bits to ’0’.

3.7.3.3.2.26 Extended Neighbor List Update Message

MSG_TAG: ENLUM

Field	Length (bits)
PILOT_INC	4
NGHBR_SRCH_MODE	2
SRCH_WIN_N	4
USE_TIMING	1
GLOBAL_TIMING_INCL	0 or 1
GLOBAL_TX_DURATION	0 or 4
GLOBAL_TX_PERIOD	0 or 7
NUM_NGHBR	6

NUM_NGHBR occurrences of the following field:

{ (NUM_NGHBR)

NGHBR_PN	9
SEARCH_PRIORITY	0 or 2
SRCH_WIN_NGHBR	0 or 4
TIMING_INCL	0 or 1
NGHBR_TX_OFFSET	0 or 7
NGHBR_TX_DURATION	0 or 4
NGHBR_TX_PERIOD	0 or 7

} (NUM_NGHBR)

SRCH_OFFSET_INCL	1

NUM_NGHBR occurrences of the following record:

{ (NUM_NGHBR)

ADD_PILOT_REC_INCL	1
NGHBR_PILOT_REC_TYPE	0 or 3
RECORD_LEN	0 or 3
Type-specific fields	0 or 8 × RECORD_LEN
SRCH_OFFSET_NGHBR	0 or 3

} (NUM_NGHBR)

(continues on next page)

Field	Length (bits)
RESQ_ENABLED	1
RESQ_DELAY_TIME	0 or 6
RESQ_ALLOWED_TIME	0 or 6
RESQ_ATTEMPT_TIME	0 or 6
RESQ_CODE_CHAN	0 or 11
RESQ_QOF	0 or 2
RESQ_MIN_PERIOD_INCL	0 or 1
RESQ_MIN_PERIOD	0 or 5
RESQ_NUM_TOT_TRANS_INCL	0 or 1
RESQ_NUM_TOT_TRANS_20MS	0 or 4
RESQ_NUM_TOT_TRANS_5MS	0 or 4
RESQ_NUM_PREAMBLE	0 or 3
RESQ_POWER_DELTA	0 or 3

If RESQ_ENABLED is set to '1', NUM_NGHBR occurrences of the following one-field record:

{ (NUM_NGHBR)

NGHBR_RESQ_CONFIGURED	1

} (NUM_NGHBR)

PILOT_INC - Pilot PN sequence offset index increment.

A mobile station searches for Remaining Set pilots at pilot PN sequence index values that are multiples of this value.

The base station shall set this field to the pilot PN sequence increment, in units of 64 PN chips, that mobile stations are to use for searching the Remaining Set. The base station should set this field to the largest increment such that the pilot PN sequence offsets of all its neighbor base stations are integer multiples of that increment.

The base station shall set this field to a value in the range 1 to 15 inclusive.

NGHBR_SRCH_MODE - Search mode.

The base station shall set this field to the value specified in Table 3.7.3.3.2.26-1 corresponding to the search mode.

Table 3.7.3.3.2.26-1. NGHBR_SRCH_MODE Field

Value (binary)	Description
00	No search priorities or search windows
01	Search priorities
10	Search windows
11	Search windows and search priorities

SRCH_WIN_N - Default search window size for the Neighbor Set.

The base station shall set this field to the value specified in Table 2.6.6.2.1-1 corresponding to the default search window size to be used by the mobile station for its Neighbor Set. The mobile station uses the default search window size for all pilots in its Neighbor Set when the search window is not specified for each pilot individually (NGHBR_SRCH_MODE is set to a value other than '10' and '11').

USE_TIMING - Use timing indicator.

If base station timing information is included for neighbor base stations, the base station shall set this field to '1'; otherwise, the base station shall set this field to '0'.

GLOBAL_TIMING_INCL - Global timing included.

If USE_TIMING is set to '1', the base station shall include the field GLOBAL_TIMING_INCL and set this field as described below; otherwise, the base station shall omit this field.

If base station timing information is included globally for all neighbor base stations with TIMING_INCL equal to '1', the base station shall set this field to '1'; otherwise, the base station shall set this field to '0'.

GLOBAL_TX_DURATION - Global neighbor transmit time duration.

If GLOBAL_TIMING_INCL is included and is set to '1', the base station shall include the field GLOBAL_TX_DURATION and shall set this field as described below; otherwise, the base station shall omit this field.

The base station shall set this field to the duration of the base station transmit window, during each period, in units of 80 ms. The base station should set this field to a value of 3 or greater.

GLOBAL_TX_PERIOD - Global neighbor transmit time period.

If GLOBAL_TIMING_INCL is included and is set to '1', the base station shall include the field GLOBAL_TX_PERIOD and shall set this field as described below; otherwise, the base station shall omit this field.

The base station shall set this field to duration of the period, in units of 80 ms.

NUM_NGHBR - Number of neighbor pilot PN sequences.

The base station shall set this field to the number of neighbors included in the message.

The base station shall include one occurrence of the following record for each pilot that a mobile station is to place in its Neighbor Set

NGHBR_PN - Neighbor pilot PN sequence offset index.

The base station shall include one occurrence of this field for each pilot in its neighbor list. The base station shall set this field to the pilot's PN sequence offset, in units of 64 PN chips.

SEARCH_PRIORITY - Pilot Channel search priority.

If NGHBR_SRCH_MODE is set to '01' or '11', then the base station shall set this field to the search priority for this neighbor. The base station shall set the search priority as specified in Table 3.7.3.3.2.26-2. If NGHBR_SRCH_MODE is set to any other value, the base station shall omit this field.

Table 3.7.3.3.2.26-2. SEARCH_PRIORITY Field

Value (binary)	Search Priority
00	Low
01	Medium
10	High
11	Very High

SRCH_WIN_NGHBR - Neighbor pilot channel search window size.

If NGHBR_SRCH_MODE is set to '10' or '11', then the base station shall set this field to the value specified in Table 2.6.6.2.1-1 corresponding to the search window size to be used by the mobile stations for this neighbor. If NGHBR_SRCH_MODE is set to any other value, the base station shall omit this field.

TIMING_INCL - Timing included indicator.

If USE_TIMING is set to '1', the base station shall include the field TIMING_INCL and set this field as described below; otherwise, the base station shall omit this field.

If base station timing information is included for this neighbor base station, the base station shall set this field to '1'; otherwise, the base station shall set this field to '0'.

NGHBR_TX_OFFSET - Neighbor transmit time offset.

If TIMING_INCL is included and is set to ‘1’, the base station shall include the field NGHBR_TX_OFFSET and set this field as described below; otherwise, the base station shall omit this field.

The base station shall set this field to the time offset, in units of 80 ms, from the beginning of the neighbor timing period to the beginning of the first base station transmit window within the period. The beginning of the neighbor timing period occurs when $\lfloor t/4 \rfloor$ mod (16384)= 0.

NGHBR_TX_DURATION - Neighbor transmit time duration.

If TIMING_INCL is included and is set to ‘1’ and GLOBAL_TIMING_INCL is set to ‘0’, the base station shall include the field NGHBR_TX_DURATION and set this field as described below; otherwise, the base station shall omit this field.

The base station shall set this field to duration of the base station transmit window, during each period, in units of 80 ms. The base station should set this field to a value of 3 or greater.

NGHBR_TX_PERIOD - Neighbor transmit time period.

If TIMING_INCL is included and is set to ‘1’ and GLOBAL_TIMING_INCL is set to ‘0’, the base station shall include the field NGHBR_TX_PERIOD and set this field as described below; otherwise, the base station shall omit this field.

The base station shall set this field to duration of the period, in units of 80 ms.

SRCH_OFFSET_INCL - Neighbor pilot channel search window offset included.

If NGHBR_SRCH_MODE = ‘10’ or ‘11’ and if the SRCH_OFFSET_NGHBR field is included in the following records, the base station shall set this bit to ‘1’; otherwise, the base station shall set this bit to ‘0’.

The base station shall include one occurrence of the following record for each pilot that a mobile station is to place in its Neighbor Set. The base station shall use the same order for the following record as is used for previous pilots which are listed in this message. Specifically, the ith occurrence of the following record shall correspond the ith pilot in this message.

ADD_PILOT_REC_INCL - Additional pilot information included indicator.

The base station shall set this field to ‘1’ if additional pilot information listed in NGHBR_PILOT_REC_TYPE and RECORD_LEN fields are included. The base station shall set this field to ‘0’ if the corresponding pilot is the common pilot and there is no additional pilot information included.

NGHBR_PILOT_REC_TYPE - Neighbor Pilot record type

If ADD_PILOT_REC_INCL is set to '1', the base station shall set this field to the NGHBR_PILOT_REC_TYPE value shown in Table 3.7.2.3.2.22-5 corresponding to the type of Pilot Record specified by this record.

If ADD_PILOT_REC_INCL is set to '0', the base station shall omit this field.

RECORD_LEN - Pilot record length.

If ADD_PILOT_REC_INCL is set to '1', the base station shall set this field to the number of octets in the type-specific fields of this pilot record.

If ADD_PILOT_REC_INCL is set to '0', the base station shall omit this field.

Type-specific fields - Pilot record type-specific fields.

If ADD_PILOT_REC_INCL is set to '1', the base station shall include type-specific fields based on the NGHBR_PILOT_REC_TYPE of this pilot record.

If ADD_PILOT_REC_INCL is set to '0', the base station shall omit this field.

If NGHBR_PILOT_REC_TYPE is equal to '000', the base station shall include the following fields:

Field	**Length (bits)**
TD_POWER_LEVEL	2
TD_MODE	2
RESERVED	4

TD_POWER_LEVEL - TD Transmit Power Level.

The base station shall set this field to the TD transmit power level relative to that of the Forward Pilot Channel as specified in Table 3.7.2.3.2.26-4.

TD_MODE - Transmit Diversity mode.

The base station shall set this field to the Transmit Diversity mode, as specified in Table 3.7.2.3.2.26-3.

RESERVED - Reserved bits.

The base station shall set this field to '0000'.

If NGHBR_PILOT_REC_TYPE is equal to '001', the base station shall include the following fields:

Field	Length (bits)
QOF	2
WALSH_LENGTH	3
AUX_PILOT_WALSH	WALSH_LENGTH+6
RESERVED	0 to 7 (as needed)

QOF - Quasi-orthogonal function index.

The base station shall set this field to the index of the Quasi-orthogonal function (see [2]).

WALSH_LENGTH - Length of the Walsh code.

The base station shall set this field to the WALSH_LENGTH value shown in Table 3.7.2.3.2.22–6 corresponding to the length of the Walsh code for the pilot that is used in as the Auxiliary Pilot.

AUX_PILOT_WALSH - Walsh code for the Auxiliary Pilot.

The base station shall set this field to the Walsh code corresponding to the Auxiliary Pilot.

RESERVED - Reserved bits.

The base station shall set all the bits of this field to ‘0’ to make the entire record octet-aligned.

If NGHBR_PILOT_REC_TYPE is equal to ‘010’, the base station shall include the following fields:

Field	Length (bits)
QOF	2
WALSH_LENGTH	3
AUX_WALSH	WALSH_LENGTH+6
AUX_TD_POWER_LEVEL	2
TD_MODE	2
RESERVED	0 to 7 (as needed)

QOF - Quasi-orthogonal function index for the Auxiliary Transmit Diversity Pilot.

The base station shall set this field to the index of the Quasi-orthogonal function (see [2]).

WALSH_LENGTH - Length of the Walsh code.

The base station shall set this field to the WALSH_LENGTH value shown in 3.7.2.3.2.22-6 corresponding to the length of the Walsh code for the pilots that are used as Auxiliary pilot in the transmit diversity mode.

AUX_WALSH - Walsh code for the Auxiliary Pilot.

The base station shall set this field to the Walsh code corresponding to the Auxiliary Pilot.

AUX_TD_POWER_LEVEL - Auxiliary Transmit Diversity Pilot power level.

The base station shall set this field to the Auxiliary Transmit Diversity Pilot transmit power level relative to that of the Auxiliary Pilot as specified in Table 3.7.2.3.2.22-7.

TD_MODE - Transmit Diversity mode.

The base station shall set this field to the Transmit Diversity mode, as specified in Table 3.7.2.3.2.26-3.

RESERVED - Reserved bits.

The base station shall set all the bits of this field to '0' to make the entire record octet-aligned.

If NGHBR_PILOT_REC_TYPE is equal to '011', the base station shall include the following fields:

Field	**Length (bits)**
SR3_PRIMARY_PILOT	2
SR3_PILOT_POWER1	3
SR3_PILOT_POWER2	3

SR3_PRIMARY_PILOT – Primary SR3 pilot.

The base station shall set this field to the value shown in Table 3.7.2.3.2.26-5 corresponding to the position of the primary SR3 pilot.

SR3_PILOT_POWER1 – The primary SR3 pilot power level relative to that of the pilot on the lower frequency of the two remaining SR3 frequencies.

The base station shall set this field to the value shown in Table 3.7.2.3.2.26-6 corresponding to the power level of the primary pilot with respect to the pilot on the lower frequency of the two remaining SR3 frequencies.

SR3_PILOT_POWER2 – The primary SR3 pilot power level relative to that of the pilot on the higher frequency of the two remaining SR3 frequencies.

The base station shall set this field to the value shown in Table 3.7.2.3.2.26-6 corresponding to the power level of the primary pilot with respect to the pilot on the higher frequency of the two remaining SR3 frequencies.

If NGHBR_PILOT_REC_TYPE is equal to '100', the base station shall include the following fields:

Field	Length (bits)
SR3_PRIMARY_PILOT	2
SR3_PILOT_POWER1	3
SR3_PILOT_POWER2	3
QOF	2
WALSH_LENGTH	3
AUX_PILOT_WALSH	WALSH_LENGTH+6
ADD_INFO_INCL1	1
QOF1	0 or 2
WALSH_LENGTH1	0 or 3
AUX_PILOT_WALSH1	0 or WALSH_LENGTH1+6
ADD_INFO_INCL2	1
QOF2	0 or 2
WALSH_LENGTH2	0 or 3
AUX_PILOT_WALSH2	0 or WALSH_LENGTH2+6
RESERVED	0 – 7 (as needed)

SR3_PRIMARY_PILOT– Primary SR3 pilot.

The base station shall set this field to the value shown in Table 3.7.2.3.2.26-5 corresponding to the position of the primary SR3 pilot.

SR3_PILOT_POWER1 – The primary SR3 pilot power level relative to that of the pilot on the lower frequency of the two remaining SR3 frequencies.

The base station shall set this field to the value shown in Table 3.7.2.3.2.26-6 corresponding to the power level of the primary pilot with respect to the pilot on the lower frequency of the two remaining SR3 frequencies.

SR3_PILOT_POWER2 – The primary SR3 pilot power level relative to that of the pilot on the higher frequency of the two remaining SR3 frequencies.

The base station shall set this field to the value shown in Table 3.7.2.3.2.26-6 corresponding to the power level of the primary pilot with respect to the pilot on the higher frequency of the two remaining SR3 frequencies.

QOF - Quasi-orthogonal function index.

The base station shall set this field to the index of the Quasi-orthogonal function (see [2]) on the frequency of the primary pilot.

WALSH_LENGTH - Length of the Walsh Code.

The base station shall set this field to the WALSH_LENGTH value shown in Table 3.7.2.3.2.22–6 corresponding to the length of the Walsh code for the pilot that is used as the Auxiliary pilot on the frequency of the primary pilot.

AUX_PILOT_WALSH - Walsh Code for the Auxiliary Pilot.

The base station shall set this field to the Walsh code corresponding to the Auxiliary pilot on the frequency of the primary pilot.

ADD_INFO_INCL1 - Additional information included for the pilot on the lower frequency of the two remaining SR3 frequencies.

If the additional information for the pilot on the lower frequencies of the two remaining SR3 frequencies is the same as pilot on the primary frequency, the base station shall set this field to ‘0’; otherwise, the base station shall set this field to ‘1’.

QOF1 - Quasi-orthogonal function index for the pilot on the lower frequency of the two remaining SR3 frequencies.

If ADD_INFO_INCL1 is set to ‘0’, the base station shall omit this field; otherwise, the base station shall set this field as follows:

The base station shall set this field to the index of the Quasi-orthogonal function (see [2]) on the lower frequency of the two remaining SR3 frequencies.

WALSH_LENGTH1 - Length of the Walsh Code for the pilot on the lower frequency of the two remaining SR3 frequencies.

If ADD_INFO_INCL1 is set to ‘0’, the base station shall omit this field; otherwise, the base station shall set this field as follows:

The base station shall set this field to the WALSH_LENGTH value shown in Table 3.7.2.3.2.22–6 corresponding to the length of the Walsh code for the pilot that is used as the Auxiliary pilot on the lower frequency of the two remaining SR3 frequencies.

AUX_PILOT_WALSH1 - Walsh Code for the Auxiliary Pilot on the lower frequency of the two remaining SR3 frequencies.

If ADD_INFO_INCL1 is set to ‘0’, the base station shall omit this field; otherwise, the base station shall set this field as follows:

The base station shall set this field to the Walsh code corresponding to the Auxiliary pilot on the lower frequency of the two remaining SR3 frequencies.

ADD_INFO_INCL2 - Additional information included for the pilot on the higher frequency of the two remaining SR3 frequencies.

If the additional information for the pilot on the higher frequencies of the two remaining SR3 frequencies is the same as pilot on the primary frequency, the base station shall set this field to ‘0’; otherwise, the base station shall set this field to ‘1’.

QOF2 - Quasi-orthogonal function index for the pilot on the higher frequency of the two remaining SR3 frequencies.

If ADD_INFO_INCL2 is set to ‘0’, the base station shall omit this field; otherwise, the base station shall set this field as follows:

The base station shall set this field to the index of the Quasi-orthogonal function (see [2]) on the higher frequency of the two remaining SR3 frequencies.

WALSH_LENGTH2 - Length of the Walsh Code for the pilot on the higher frequency of the two remaining SR3 frequencies.

If ADD_INFO_INCL2 is set to ‘0’, the base station shall omit this field; otherwise, the base station shall set this field as follows:

The base station shall set this field to the WALSH_LENGTH value shown in Table 3.7.2.3.2.22–6 corresponding to the length of the Walsh code for the pilot that is used as the Auxiliary pilot on the higher frequency of the two remaining SR3 frequencies.

AUX_PILOT_WALSH2 - Walsh Code for the Auxiliary Pilot on the higher frequency of the two remaining SR3 frequencies.

If ADD_INFO_INCL2 is set to ‘0’, the base station shall omit this field; otherwise, the base station shall set this field as follows:

The base station shall set this field to the Walsh code corresponding to the Auxiliary pilot on the higher frequency of the two remaining SR3 frequencies.

RESERVED - Reserved bits.

The base station shall set all the bits of this field to ‘0’ to make the entire record octet-aligned.

SRCH_OFFSET_NGHBR - Neighbor pilot channel search window offset.

If SRCH_OFFSET_INCL equals to ‘1’, then the base station shall set this field to the value shown in Table 2.6.6.2.1-2 corresponding to the search window offset to be used by the mobile station for this neighbor; otherwise, the base station shall omit this field.

RESQ_ENABLED – Call rescue feature enabled indicator.

The base station shall set this field to '1' if the call rescue feature is enabled and there is at least one occurrence of NGHBR_RESQ_CONFIGURED set to '1' in this message; otherwise, the base station shall set this field to '0'.

RESQ_DELAY_TIME – Call rescue delay timer value.

If RESQ_ENABLED is set to '0', the base station shall omit this field; otherwise, the base station shall include this field and set it as follows:

The base station shall set this field to the value of the call rescue delay timer to be used by the mobile station, in units of 80 ms.

RESQ_ALLOWED_TIME – Call rescue allowed timer value.

If RESQ_ENABLED is set to '0', the base station shall omit this field; otherwise, the base station shall include this field and set it as follows:

The base station shall set this field to the value of the call rescue allowed timer to be used by the mobile station, in units of 80 ms.

RESQ_ATTEMPT_TIME – Call rescue attempt timer value.

If RESQ_ENABLED is set to '0', the base station shall omit this field; otherwise, the base station shall include this field and set it as follows:

The base station shall set this field to the value of the call rescue attempt timer to be used by the mobile station, in units of 40 ms.

RESQ_CODE_CHAN – Code channel index for the Rescue Channel.

If RESQ_ENABLED is set to '0', the base station shall omit this field; otherwise, the base station shall include this field and set it as follows:

The base station shall set this field to the code channel index (see [2]) that the mobile station is to use on the Forward Fundamental Channel when attempting Call Rescue Soft Handoff with the associated neighbor pilot.

If Radio Configuration 1, 2, 3, or 5 (see [2]) is used, the base station shall set this field in the range 1 to 63 inclusive. If Radio Configuration 4, 6, 8, 11, or 12 is used, the base station shall set this field in the range 1 to 127 inclusive. If Radio Configuration 7 or 9 is used, the base station shall set this field in the range 1 to 255 inclusive.

RESQ_QOF – Quasi-Orthogonal Function mask identifier for the Rescue Channel.

If RESQ_ENABLED is set to '0', the base station shall omit this field; otherwise, the base station shall include this field and set it as follows:

The base station shall set this field to the quasi-orthogonal function mask identifier (see [2]) that the mobile station is to use on the Forward Fundamental Channel when attempting Call Rescue Soft Handoff with the associated neighbor pilot.

RESQ_MIN_PERIOD_INCL – Minimum time between consecutive rescues included indicator.

If RESQ_ENABLED is set to '0', the base station shall omit this field; otherwise, the base station shall include this field and set it as follows:

The base station shall set this field to '1' if the RESQ_MIN_PERIOD field is included in this message; otherwise, the base station shall set this field to '0'.

This field is set to '0' if there is no minimum time restriction between consecutive rescues.

RESQ_MIN_PERIOD – Minimum time between consecutive rescues.

If RESQ_MIN_PERIOD_INCL is not included, or is included and set to '0', the base station shall omit this field; otherwise, the base station shall include this field and set it as follows:

The base station shall set this field to one less than the minimum time after a successful call rescue (i.e. receipt of N_{3m} good frames by the mobile station after the rescue attempt timer is enabled) before any subsequent call rescue attempts can be initiated, in units of 2 seconds.

RESQ_NUM_TOT_TRANS_INCL – The required number of transmissions before declaring L2 Acknowledgment Failure when Call Rescue is enabled included indicator.

If RESQ_ENABLED is set to '0', the base station shall omit this field; otherwise, the base station shall include this field and set it as follows:

If the required number of transmissions of a regular PDU and mini PDU before declaring L2 Acknowledgment Failure when Call Rescue is enabled is included in this message, the base station shall set this field to '1'; otherwise, the base station shall set this field to '0'.

RESQ_NUM_TOT_TRANS_20MS – The required number of transmissions of a regular PDU before declaring L2 Acknowledgment Failure when Call Rescue is enabled.

If RESQ_NUM_TOT_TRANS_INCL field is not included or is included and is set to '0', the base station shall omit this field; otherwise, the base station shall include this field and set it as follows:

The base station shall set this field to the required number of transmissions of a regular PDU before declaring L2 Acknowledgment Failure when Call Rescue is enabled.

The base station shall not set this field to a value greater than N_{1m}.

RESQ_NUM_TOT_TRANS_5MS – The required number of transmissions of a mini PDU before declaring L2 Acknowledgment Failure when Call Rescue is enabled.

If RESQ_NUM_TOT_TRANS_INCL field is not included or is included and is set to '0', the base station shall omit this field; otherwise, the base station shall include this field and set it as follows:

The base station shall set this field to the required number of transmissions of a mini PDU before declaring L2 Acknowledgment Failure when Call Rescue is enabled.

The base station shall not set this field to a value greater than N_{15m}.

RESQ_NUM_PREAMBLE – The Traffic Channel preamble Length for Call Rescue Soft Handoff.

If RESQ_ENABLED is set to '0', the base station shall omit this field; otherwise, the base station shall include this field and set it to the length of Traffic Channel preamble that the mobile station is to send when performing a call rescue soft handoff, as follows:

If Radio configuration 1 or Radio configuration 2 is being used, the base station shall set this field to the Traffic Channel preamble length in 20 ms units; otherwise, the base station shall set this field to the value shown in Table 3.7.3.3.2.17-1 corresponding to the Traffic Channel preamble length in 1.25 ms units.

RESQ_POWER_DELTA – The power level adjustment to be applied to the last closed-loop power level when re-enabling the transmitter for call rescue soft handoff.

If RESQ_ENABLED is set to '0', the base station shall omit this field; otherwise, the base station shall set this field to a value by which mobile stations are to adjust the last closed-loop power level when re-enabling the transmitter for call rescue, expressed as a two's complement value in units of 1 dB.

The base station shall include NUM_NGHBR occurrences of the following one-field record if RESQ_ENABLED is set to '1'. The base station shall use the same order for the following field as is used for the NGHBR_PN fields listed in this message.

NGHBR_RESQ_CONFIGURED – Neighbor Rescue Channel configured indicator.

The base station shall set this field to '1' if a Rescue Channel is configured for this neighbor pilot; otherwise, the base station shall set this field to '0'.

3.7.3.3.2.27 Candidate Frequency Search Request Message

MSG_TAG: CFSRQM

Field	Length (bits)
USE_TIME	1
ACTION_TIME	6
RESERVED_1	4
CFSRM_SEQ	2
SEARCH_TYPE	2
SEARCH_PERIOD	4
SEARCH_MODE	4
MODE_SPECIFIC_LEN	8
Mode-specific fields	8 × MODE_SPECIFIC_LEN
ALIGN_TIMING	1
SEARCH_OFFSET	0 or 6

USE_TIME - Use action time indicator.

This field indicates whether an explicit action time is specified in this message.

If an explicit action time is specified in this message, the base station shall set this field to '1'; otherwise, the base station shall set this field to '0'.

If the base station requests the mobile station to perform an aligned search (see 2.6.6.2.8.3), the base station shall specify an explicit action time for the message.

ACTION_TIME - Action time.

If the USE_TIME field is set to '1', the base station shall set this field to the System Time minus $FRAME\_OFFSET_S \times 1.25$ ms, in units of 80 ms (modulo 64), at which the message is to take effect. If the USE_TIME field is set to '0', the base station shall set this field to '000000'.

RESERVED_1 - Reserved bits.

The base station shall set this field to '0000'.

CFSRM_SEQ - *Candidate Frequency Search Request Message* sequence number.

The base station shall set this field to the *Candidate Frequency Search Request Message* sequence number, as specified in 2.6.6.2.2.3.

SEARCH_TYPE - Search command.

The base station shall set this field to the appropriate SEARCH_TYPE code from Table 3.7.3.3.2.27-1 to indicate the purpose of the message.

Table 3.7.3.3.2.27-1. SEARCH_TYPE Codes

SEARCH_TYPE (binary)	Meaning
00	Directs the mobile station to stop any periodic search in progress (see 2.6.6.2.8.3.4 and 2.6.6.2.10.4)
01	Directs the mobile station to perform a single search (see 2.6.6.2.8.3.1 and 2.6.6.2.10.1).
11	Directs the mobile station to perform a periodic search (see 2.6.6.2.8.3.2 and 2.6.6.2.10.2).
10	Reserved.

SEARCH_PERIOD - Time between successive searches on the Candidate Frequency for periodic searches.

The base station shall set this field to the SEARCH_PERIOD value shown in Table 2.6.6.2.8.3.2-1 corresponding to the search period to be used by the mobile station, i.e., the time between the beginning of successive searches on the Candidate Frequency.

SEARCH_MODE - Search mode.

The base station shall set this field to the SEARCH_MODE value specified in Table 3.7.3.3.2.27-2 corresponding to the type of search specified by this message.

Table 3.7.3.3.2.27-2. SEARCH_MODE Types

SEARCH_MODE (binary)	Description
0000	Searches for CDMA pilots on a Candidate Frequency.
0001	Reserved (Previously: Searches for analog channels)
0010	Searches for Direct Spread (DS) neighbor cell (see [32]).
0011-1111	Reserved

MODE_SPECIFIC_LEN - Length of mode-specific fields.

The base station shall set this field to the number of octets in the mode-specific fields of this message.

Mode-specific fields - Search mode-specific fields.

The base station shall include mode-specific fields based on the SEARCH_MODE field.

If SEARCH_MODE is equal to '0000', the base station shall include the following fields:

Field	Length (bits)
BAND_CLASS	5
CDMA_FREQ	11
SF_TOTAL_EC_THRESH	5
SF_TOTAL_EC_I0_THRESH	5
DIFF_RX_PWR_THRESH	5
MIN_TOTAL_PILOT_EC_I0	5
CF_T_ADD	6
TF_WAIT_TIME	4
CF_PILOT_INC	4
CF_SRCH_WIN_N	4
CF_SRCH_WIN_R	4
RESERVED_2	5
PILOT_UPDATE	1
NUM_PILOTS	0 or 6
CF_NGHBR_SRCH_MODE	0 or 2

NUM_PILOTS occurrences of the following record:

{ (0 or NUM_PILOTS)

NGHBR_PN	9
SEARCH_SET	1
SEARCH_PRIORITY	0 or 2
SRCH_WIN_NGHBR	0 or 4

} (0 or NUM_PILOTS)

NUM_PILOTS occurrences of the following record:

CF_SRCH_OFFSET_INCL	1

(continues on next page)

Field	Length (bits)
NUM_PILOTS occurrences of the following record:	
{ (0 or NUM_PILOTS)	
ADD_PILOT_REC_INCL	1
NGHBR_PILOT_REC_TYPE	0 or 3
RECORD_LEN	0 or 3
Type-specific fields	0 or 8 × RECORD_LEN
SRCH_OFFSET_NGHBR	0 or 3
} (0 or NUM_PILOTS)	
RESERVED_3	0 - 7 (as needed)

BAND_CLASS - Band class.

The base station shall set this field to the CDMA band class of the Candidate Frequency.

CDMA_FREQ - Frequency assignment.

The base station shall set this field to the CDMA frequency assignment for the Candidate Frequency.

SF_TOTAL_EC_THRESH - Serving Frequency total pilot E_c threshold.

If the mobile station is not to use the measurement of total E_c of the pilots in the Serving Frequency Active Set in the Candidate Frequency periodic search procedure, the base station shall set this field to '11111'; otherwise, the base station shall set this field to

$$\lceil (10 \times \log_{10} (total\_ec\_thresh) + 120) / 2 \rceil$$

where *total_ec_thresh* is defined by the following rule: The mobile station is not to visit the CDMA Candidate Frequency to search for pilots if the total E_c of the pilots in the Serving Frequency Active Set is greater than *total_ec_thresh*.

SF_TOTAL_EC_I0_THRESH - Serving Frequency total pilot E_c/I_0 threshold.

If the mobile station is not to use the measurement of total E_c/ I_0 of the pilots in the Serving Frequency Active Set in the Candidate Frequency periodic search procedure, the base station shall set this field to '11111'; otherwise, the base station shall set this field to

$$\lfloor - 20 \times \log_{10} (total\_ec\_i0\_thresh) \rfloor$$

where *total_ec_i0_thresh* is defined by the following rule: The mobile station is not to visit the CDMA Candidate Frequency to search for pilots if the total E_c/I_0 of the pilots in the Serving Frequency Active Set is greater than *total_ec_i0_thresh*.

DIFF_RX_PWR_THRESH - Minimum difference in received power.

If this message is used for the Candidate Frequency single or periodic search procedure:

If the mobile station is to search for pilots on the CDMA Candidate Frequency irrespective of the received power on the Candidate Frequency, the base station shall set this field to '00000'; otherwise, the base station shall set this field to

$$\lceil (minimum\_power\_diff + 30) / 2 \rceil$$

where *minimum_power_diff* is determined by the following rule: The mobile station is not to search for pilots on the CDMA Candidate Frequency if (*cand_freq_pwr* - *serving_freq_pwr*) is less than *minimum_power_diff* (in dB), where *cand_freq_pwr* is the received power on the CDMA Candidate Frequency, in dBm / 1.23 MHz, and *serving_freq_pwr* is the received power on the Serving Frequency, in dBm / 1.23 MHz.

If this message is used for the Hard Handoff with Return on Failure procedure:

If the mobile station is to continue hard handoff procedures irrespective of the received power on the Target Frequency, the base station shall set this field to '00000'; otherwise, the base station shall set this field to

$$\lceil (minimum\_power\_diff + 30) / 2 \rceil$$

where *minimum_power_diff* is determined by the following rule: The mobile station is to declare the handoff attempt to be unsuccessful if (*target_freq_pwr* - *serving_freq_pwr*) is less than *minimum_power_diff* (in dB), where *target_freq_pwr* is the received power on the CDMA Target Frequency, in dBm / 1.23 MHz, and *serving_freq_pwr* is the received power on the Serving Frequency, in dBm / 1.23 MHz.

MIN_TOTAL_PILOT_EC_I0 - Minimum total pilot E_c/ I_o.

If this message is used for the Candidate Frequency periodic search procedure:

If the mobile station is to search for pilots on the CDMA Candidate Frequency irrespective of the strength of pilots in the Candidate Frequency Search Set, the base station shall set this field to '00000'; otherwise, the base station shall set this field to

$$\lfloor - 20 \times \log_{10} total\_pilot\_threshold \rfloor$$

where *total_pilot_threshold* is defined by the following rule: The mobile station is not to send the *Candidate Frequency Search Report Message* if the sum of E_c/I_0 of all pilots in the mobile station's Candidate Frequency Search Set that measure above CF_T_ADD is less than *total_pilot_threshold*.

If this message is used for the Hard Handoff with Return on Failure procedure:

If the mobile station is to attempt to demodulate the Forward Traffic Channels irrespective of the strength of pilots in the Active Set, the base station shall set this field to '00000'; otherwise, the base station shall set this field to

$$\lfloor -20 \times \log_{10} \mathit{total\_pilot\_threshold} \rfloor$$

where *total_pilot_threshold* is defined by the following rule: The mobile station is not to attempt to demodulate the Forward Traffic Channels if the sum of E_c/I_0 of all pilots in the mobile station's Active Set is less than *total_pilot_threshold*.

CF_T_ADD - Pilot detection threshold for the CDMA Candidate Frequency.

This value is used by the mobile station to trigger the sending of the *Candidate Frequency Search Report Message* during a periodic search of the CDMA Candidate Frequency (see 2.6.6.2.8.3.2).

The base station shall set this field to the pilot detection threshold, expressed as an unsigned binary number equal to $\lfloor -2 \times 10 \times \log_{10} E_c/I_0 \rfloor$.

TF_WAIT_TIME - The total maximum wait time on the CDMA Target Frequency.

The base station shall set this field to the maximum wait time, in units of 80 ms, that the mobile station is to spend waiting for a period of ($N_{11m} \times 20$) ms with sufficient signal quality (e.g. good frames) on the CDMA Target Frequency.

CF_PILOT_INC - Pilot PN sequence offset index increment to be used on the CDMA Candidate Frequency after handoff.

The base station shall set this field to the pilot PN sequence increment, in units of 64 PN chips, that the mobile station is to use for searching the Remaining Set, after a handoff to the CDMA Candidate Frequency is successfully completed. The base station should set this field to the largest increment such that the pilot PN sequence offsets of all its neighbor base stations are integer multiples of that increment.

CF_SRCH_WIN_N - Default search window size for the Candidate Frequency Search Set.

The base station shall set this field to the value specified in Table 2.6.6.2.1-1 corresponding to the default search window size to be used by the mobile station for its Candidate Frequency Search Set. The mobile station uses the default search window size for all pilots in its Candidate Frequency Search Set when the search window has not been specified for each pilot individually.

CF_SRCH_WIN_R - Search window size for the Remaining Set on the CDMA Candidate Frequency.

The base station shall set this field to the window size parameter shown in Table 2.6.6.2.1-1 corresponding to the number of PN chips that the mobile station is to search for pilots in the Remaining Set on the CDMA Candidate Frequency after a handoff is successfully completed.

RESERVED_2 - Reserved bits.

The base station shall set this field to '00000'.

PILOT_UPDATE - Pilot search parameter update indicator.

If the mobile station is to change its pilot search parameters, the base station shall set this field to '1'; otherwise, the base station shall set this field to '0'.

NUM_PILOTS - Number of pilots included in the message.

If the PILOT_UPDATE field is set to '0', the base station shall omit this field; otherwise, the base station shall include this field and set it as follows:

The base station shall set this field to the number of the CDMA Candidate Frequency pilots included in this message. The base station shall set this field to a value from 0 to N_{8m}, inclusive.

CF_NGHBR_SRCH_MODE - Search mode for Candidate Frequency Search Set.

If the PILOT_UPDATE field is set to '0', the base station shall omit this field; otherwise, the base station shall include this field and set it as follows:

The base station shall set this field to the value shown in Table 3.7.3.3.2.27-3 corresponding to the search mode.

Table 3.7.3.3.2.27-3. CF_NGHBR_SRCH_MODE Field

Value (binary)	Description
00	No search priorities or search windows specified
01	Search priorities specified
10	Search windows specified
11	Search windows and search priorities specified

The base station shall include NUM_PILOTS occurrences of the following four-field record, one for each included CDMA Candidate Frequency pilot.

NGHBR_PN - Neighbor pilot PN sequence offset index.

The base station shall set this field to the pilot's PN sequence offset, in units of 64 PN chips.

SEARCH_SET - Flag to indicate if the corresponding pilot is to be searched.

The base station shall set this field to '1' if the mobile station should add the corresponding pilot to its Candidate Frequency Search Set; otherwise, the base station shall set this field to '0'.

SEARCH_PRIORITY - Pilot Channel search priority.

If CF_NGHBR_SRCH_MODE is set to '01' or '11', then the base station shall set this field to the search priority for this neighbor. The base station shall set the search priority as specified in Table 3.7.3.3.2.26-2. If CF_NGHBR_SRCH_MODE is set to any other value, the base station shall omit this field.

SRCH_WIN_NGHBR - Neighbor pilot channel search window size.

If CF_NGHBR_SRCH_MODE is set to '10' or '11', then the base station shall set this field to the value specified in Table 2.6.6.2.1-1 corresponding to the search window size to be used by mobile stations for this neighbor. If the CF_NGHBR_SRCH_MODE is set to any other value, the base station shall omit this field.

CF_SRCH_OFFSET_INCL - Neighbor pilot channel search window offset included.

If PILOT_UPDATE is set to '0', the base station shall omit this field; otherwise, the base station shall include this field and set it as follows:

If CF_NGHBR_SRCH_MODE is set to '10' or '11' and if SRCH_OFFSET_NGHBR is included in the message, the base station shall set this bit to '1'; otherwise, the base station shall set this bit to '0'.

ADD_PILOT_REC_INCL - Additional pilot information included indicator.

The base station shall set this field to '1' if additional pilot information listed in NGHBR_PILOT_REC_TYPE and RECORD_LEN fields are included. The base station shall set this field to '0' if the corresponding pilot is the common pilot and there is no additional pilot information included.

NGHBR_PILOT_REC_TYPE - Neighbor Pilot record type

If ADD_PILOT_REC_INCL is set to '1', the base station shall set this field to the NGHBR_PILOT_REC_TYPE value shown in Table 3.7.2.3.2.22-5 corresponding to the type of Pilot Record specified by this record.

If ADD_PILOT_REC_INCL is set to '0', the base station shall omit this field.

RECORD_LEN - Pilot record length.

If ADD_PILOT_REC_INCL is set to '1', the base station shall set this field to the number of octets in the type-specific fields of this pilot record.

If ADD_PILOT_REC_INCL is set to '0', the base station shall omit this field.

Type-specific fields - Pilot record type-specific fields.

If ADD_PILOT_REC_INCL is set to '1', the base station shall include type-specific fields based on the NGHBR_PILOT_REC_TYPE of this pilot record.

If ADD_PILOT_REC_INCL is set to '0', the base station shall omit this field.

If NGHBR_PILOT_REC_TYPE is equal to '000', the base station shall include the following fields:

Field	Length (bits)
TD_POWER_LEVEL	2
TD_MODE	2
RESERVED	4

TD_POWER_LEVEL - TD Transmit Power Level.

The base station shall set this field to the TD transmit power level relative to that of the Forward Pilot Channel as specified in Table 3.7.2.3.2.26-4.

TD_MODE - Transmit Diversity mode.

The base station shall set this field to the Transmit Diversity mode, as specified in Table 3.7.2.3.2.26-3.

RESERVED - Reserved bits.

The base station shall set these bits to '0000'.

If NGHBR_PILOT_REC_TYPE is equal to '001', the base station shall include the following fields:

Field	Length (bits)
QOF	2
WALSH_LENGTH	3
AUX_PILOT_WALSH	WALSH_LENGTH+6
RESERVED	0 to 7 (as needed)

QOF - Quasi-orthogonal function index.

The base station shall set this field to the index of the Quasi-orthogonal function (see [2]).

WALSH_LENGTH - Length of the Walsh code.

The base station shall set this field to the WALSH_LENGTH value shown in Table 3.7.2.3.2.22–6 corresponding to the length of the Walsh code for the pilot that is used in as the Auxiliary pilot.

AUX_PILOT_WALSH - Walsh code for the Auxiliary Pilot.

The base station shall set this field to the Walsh code corresponding to the Auxiliary Pilot.

RESERVED - Reserved bits.

The base station shall set all the bits of this field to '0' to make the entire record octet-aligned.

If NGHBR_PILOT_REC_TYPE is equal to '010', the base station shall include the following fields:

Field	**Length (bits)**
QOF	2
WALSH_LENGTH	3
AUX_WALSH	WALSH_LENGTH+6
AUX_TD_POWER_LEVEL	2
TD_MODE	2
RESERVED	0 to 7 (as needed)

QOF - Quasi-orthogonal function index for the Auxiliary Transmit Diversity Pilot.

The base station shall set this field to the index of the Quasi-orthogonal function (see [2]).

WALSH_LENGTH - Length of the Walsh code.

The base station shall set this field to the WALSH_LENGTH value shown in 3.7.2.3.2.22-6 corresponding to the length of the Walsh code for the pilots that are used as Auxiliary pilot in the transmit diversity mode.

AUX_WALSH - Walsh code for the Auxiliary Pilot.

The base station shall set this field to the Walsh code corresponding to the Auxiliary Pilot.

AUX_TD_POWER_LEVEL - Auxiliary Transmit Diversity Pilot power level.

The base station shall set this field to the Auxiliary Transmit Diversity Pilot transmit power level relative to that of the Auxiliary Pilot as specified in Table 3.7.2.3.2.22-7.

TD_MODE - Transmit Diversity mode.

The base station shall set this field to the Transmit Diversity mode, as specified in Table 3.7.2.3.2.26-3.

RESERVED - Reserved bits.

The base station shall set all the bits of this field to '0' to make the entire record octet-aligned.

If NGHBR_PILOT_REC_TYPE is equal to '011', the base station shall include the following fields:

Field	**Length (bits)**
SR3_PRIMARY_PILOT	2
SR3_PILOT_POWER1	3
SR3_PILOT_POWER2	3

SR3_PRIMARY_PILOT – Primary SR3 pilot.

The base station shall set this field to the value shown in Table 3.7.2.3.2.26-5 corresponding to the position of the primary SR3 pilot.

SR3_PILOT_POWER1 – The primary SR3 pilot power level relative to that of the pilot on the lower frequency of the two remaining SR3 frequencies.

The base station shall set this field to the value shown in Table 3.7.2.3.2.26-6 corresponding to the power level of the primary pilot with respect to the pilot on the lower frequency of the two remaining SR3 frequencies.

SR3_PILOT_POWER2 – The primary SR3 pilot power level relative to that of the pilot on the higher frequency of the two remaining SR3 frequencies.

The base station shall set this field to the value shown in Table 3.7.2.3.2.26-6 corresponding to the power level of the primary pilot with respect to the pilot on the higher frequency of the two remaining SR3 frequencies.

If NGHBR_PILOT_REC_TYPE is equal to '100', the base station shall include the following fields:

Field	Length (bits)
SR3_PRIMARY_PILOT	2
SR3_PILOT_POWER1	3
SR3_PILOT_POWER2	3
QOF	2
WALSH_LENGTH	3
AUX_PILOT_WALSH	WALSH_LENGTH+6
ADD_INFO_INCL1	1
QOF1	0 or 2
WALSH_LENGTH1	0 or 3
AUX_PILOT_WALSH1	0 or WALSH_LENGTH1+6
ADD_INFO_INCL2	1
QOF2	0 or 2
WALSH_LENGTH2	0 or 3
AUX_PILOT_WALSH2	0 or WALSH_LENGTH2+6
RESERVED	0 – 7 (as needed)

SR3_PRIMARY_PILOT– Primary SR3 pilot.

The base station shall set this field to the value shown in Table 3.7.2.3.2.26-5 corresponding to the position of the primary SR3 pilot.

SR3_PILOT_POWER1 – The primary SR3 pilot power level relative to that of the pilot on the lower frequency of the two remaining SR3 frequencies.

The base station shall set this field to the value shown in Table 3.7.2.3.2.26-6 corresponding to the power level of the primary pilot with respect to the pilot on the lower frequency of the two remaining SR3 frequencies.

SR3_PILOT_POWER2 – The primary SR3 pilot power level relative to that of the pilot on the higher frequency of the two remaining SR3 frequencies.

The base station shall set this field to the value shown in Table 3.7.2.3.2.26-6 corresponding to the power level of the primary pilot with respect to the pilot on the higher frequency of the two remaining SR3 frequencies.

QOF - Quasi-orthogonal function index.

The base station shall set this field to the index of the Quasi-orthogonal function (see [2]) on the frequency of the primary pilot.

WALSH_LENGTH - Length of the Walsh Code.

The base station shall set this field to the WALSH_LENGTH value shown in Table 3.7.2.3.2.22–6 corresponding to the length of the Walsh code for the pilot that is used as the Auxiliary pilot on the frequency of the primary pilot.

AUX_PILOT_WALSH - Walsh Code for the Auxiliary Pilot.

The base station shall set this field to the Walsh code corresponding to the Auxiliary pilot on the frequency of the primary pilot.

ADD_INFO_INCL1 - Additional information included for the pilot on the lower frequency of the two remaining SR3 frequencies.

If the additional information for the pilot on the lower frequencies of the two remaining SR3 frequencies is the same as pilot on the primary frequency, the base station shall set this field to ‘0’; otherwise, the base station shall set this field to ‘1’.

QOF1 - Quasi-orthogonal function index for the pilot on the lower frequency of the two remaining SR3 frequencies.

If ADD_INFO_INCL1 is set to ‘0’, the base station shall omit this field; otherwise, the base station shall set this field as follows:

The base station shall set this field to the index of the Quasi-orthogonal function (see [2]) on the lower frequency of the two remaining SR3 frequencies.

WALSH_LENGTH1 - Length of the Walsh Code for the pilot on the lower frequency of the two remaining SR3 frequencies.

If ADD_INFO_INCL1 is set to ‘0’, the base station shall omit this field; otherwise, the base station shall set this field as follows:

The base station shall set this field to the WALSH_LENGTH value shown in Table 3.7.2.3.2.22–6 corresponding to the length of the Walsh code for the pilot that is used as the Auxiliary pilot on the lower frequency of the two remaining SR3 frequencies.

AUX_PILOT_WALSH1 - Walsh Code for the Auxiliary Pilot on the lower frequency of the two remaining SR3 frequencies.

If ADD_INFO_INCL1 is set to ‘0’, the base station shall omit this field; otherwise, the base station shall set this field as follows:

The base station shall set this field to the Walsh code corresponding to the Auxiliary pilot on the lower frequency of the two remaining SR3 frequencies.

ADD_INFO_INCL2 - Additional information included for the pilot on the higher frequency of the two remaining SR3 frequencies.

If the additional information for the pilot on the higher frequencies of the two remaining SR3 frequencies is the same as pilot on the primary frequency, the base station shall set this field to ‘0’; otherwise, the base station shall set this field to ‘1’.

QOF2 - Quasi-orthogonal function index for the pilot on the higher frequency of the two remaining SR3 frequencies.

If ADD_INFO_INCL2 is set to ‘0’, the base station shall omit this field; otherwise, the base station shall set this field as follows:

The base station shall set this field to the index of the Quasi-orthogonal function (see [2]) on the higher frequency of the two remaining SR3 frequencies.

WALSH_LENGTH2 - Length of the Walsh Code for the pilot on the higher frequency of the two remaining SR3 frequencies.

If ADD_INFO_INCL2 is set to ‘0’, the base station shall omit this field; otherwise, the base station shall set this field as follows:

The base station shall set this field to the WALSH_LENGTH value shown in Table 3.7.2.3.2.22–6 corresponding to the length of the Walsh code for the pilot that is used as the Auxiliary pilot on the higher frequency of the two remaining SR3 frequencies.

AUX_PILOT_WALSH2 - Walsh Code for the Auxiliary Pilot on the higher frequency of the two remaining SR3 frequencies.

If ADD_INFO_INCL2 is set to ‘0’, the base station shall omit this field; otherwise, the base station shall set this field as follows:

The base station shall set this field to the Walsh code corresponding to the Auxiliary pilot on the higher frequency of the two remaining SR3 frequencies.

RESERVED - Reserved bits.

The base station shall set all the bits of this field to ‘0’ to make the entire record octet-aligned.

SRCH_OFFSET_NGHBR - Neighbor pilot channel search window offset.

If CF_SRCH_OFFSET_INCL is included and equals to ‘1’, then the base station shall set this field to the value specified in Table 2.6.6.2.1-2 corresponding to the search window offset to be used by the mobile station for this neighbor; otherwise, the base station shall omit this field.

RESERVED_3 - Reserved bits.

The base station shall add reserved bits as needed in order to make the length of the Mode-specific fields equal to an integer number of octets. The base station shall set these bits to ‘0’.

ALIGN_TIMING - Align timing indicator.

If the base station requests that the mobile station offset the start of the first search from the action time of this message (or of a subsequent *Candidate Frequency Search Control Message* that starts a search) by a delay specified by the SEARCH_OFFSET field, the base station shall set this field to '1'; otherwise, the base station shall set this field to '0'.

SEARCH_OFFSET - Search offset.

If the ALIGN_TIMING field is set to '0', the base station shall omit this field; otherwise, the base station shall include this field and set it to

$$\min(63, \lceil search\_offset\_time / 0.00125 \rceil)$$

where *search_offset_time* is the time offset, in seconds, of the start of the first search from the action time of this message (or of a subsequent *Candidate Frequency Search Control Message* that starts a search).

3.7.3.3.2.28 Candidate Frequency Search Control Message

MSG_TAG: CFSCNM

Field	Length (bits)
USE_TIME	1
ACTION_TIME	6
CFSCM_SEQ	2
SEARCH_TYPE	2
ALIGN_TIMING	1

USE_TIME - Use action time indicator.

This field indicates whether an explicit action time is specified in this message.

If an explicit action time is specified in this message, the base station shall set this field to '1'; otherwise, the base station shall set this field to '0'.

If the base station requests the mobile station to perform an aligned search (see 2.6.6.2.8.3), the base station shall specify an explicit action time for the message.

ACTION_TIME - Action time.

If the USE_TIME field is set to '1', the base station shall set this field to the System Time minus $FRAME\_OFFSET_S \times 1.25$ ms, in units of 80 ms (modulo 64), at which the message is to take effect. If the USE_TIME field is set to '0', the base station shall set this field to '000000'.

CFSCM_SEQ - *Candidate Frequency Search Control Message* sequence number.

The base station shall set this field to the *Candidate Frequency Search Control Message* sequence number, as specified in 3.6.6.2.2.5.

SEARCH_TYPE - Search command.

The base station shall set this field to the appropriate SEARCH_TYPE code from Table 3.7.3.3.2.27-1 to indicate the purpose of the message.

ALIGN_TIMING - Align timing indicator.

If the base station requests that the mobile station offset the start of the first search from the action time of this message by a delay specified by the SEARCH_OFFSET field of the last *Candidate Frequency Search Request Message* sent to the mobile station, the base station shall set this field to '1'; otherwise, the base station shall set this field to '0'.

3.7.3.3.2.29 Power Up Function Message

MSG_TAG: PUFM

Field	Length (bits)
USE_TIME	1
ACTION_TIME	6
ACTION_TIME_FRAME	2
PUF_SETUP_SIZE	6
PUF_PULSE_SIZE	7
PUF_INTERVAL	10
PUF_INIT_PWR	6
PUF_PWR_STEP	5
TOTAL_PUF_PROBES	4
MAX_PWR_PUF	4
PUF_FREQ_INCL	1
PUF_BAND_CLASS	0 or 5
PUF_CDMA_FREQ	0 or 11

USE_TIME - Use action time indicator.

The base station shall set this field to '1'.

ACTION_TIME - Action time.

The base station shall set this field to the System Time minus $FRAME\_OFFSET_S \times 1.25$ ms, in units of 80 ms (modulo 64), used in calculating the start of the first PUF probe.

ACTION_TIME_FRAME - Action time frame.

The base station shall set this field to the number of frames after ACTION_TIME that the mobile station is to begin the first PUF probe.

PUF_SETUP_SIZE - Number of PUF setup power control groups.

The base station shall set this field to one less than the number of power control groups that the mobile station is to transmit at nominal power prior to transmitting a PUF pulse. The base station shall set the values of PUF_SETUP_SIZE and PUF_PULSE_SIZE so that [PUF_SETUP_SIZE + 1 + PUF_PULSE_SIZE + 1] mod 16 is not equal to 0.

PUF_PULSE_SIZE - Number of PUF pulse power control groups.

The base station shall set this field to one less than the number of power control groups that the mobile station is to transmit at elevated power level during the PUF pulse. The base station shall set the values of PUF_SETUP_SIZE and PUF_PULSE_SIZE so that [PUF_SETUP_SIZE + 1 + PUF_PULSE_SIZE + 1] mod 16 is not equal to 0.

PUF_INTERVAL - PUF interval.

The base station shall set this field to the number of frames between the start of each PUF probe.

PUF_INIT_PWR - Power increase of initial PUF pulse.

The base station shall set this field to the amount (in dB) that the mobile station is to increase its mean output power for the first PUF pulse.

PUF_PWR_STEP - PUF power step.

The base station shall set this field to the value (in dB) by which the mobile station is to increment the power of a PUF pulse above nominal power from one PUF pulse to the next.

TOTAL_PUF_PROBES - Total number of PUF probes.

The base station shall set this field to one less than the maximum number of PUF probes the mobile station is to transmit in a PUF attempt.

MAX_PWR_PUF - Maximum number of PUF probes transmitted at full power.

The base station shall set this field to one less than the number of PUF pulses that the mobile station is to transmit at maximum power level.

PUF_FREQ_INCL - Frequency included indicator.

If the mobile station is to change PUF_BAND_CLASS or PUF_CDMA_FREQ, the base station shall set this field to ‘1’; otherwise, the base station shall set this field to ‘0’.

PUF_BAND_CLASS - Band class.

If PUF_FREQ_INCL is set to ‘1’, the base station shall include this field and set it to the CDMA band class corresponding to the CDMA frequency assignment for the CDMA Channel as specified in [30]; otherwise, the base station shall omit this field.

PUF_CDMA_FREQ - Frequency assignment.

If PUF_FREQ_INCL is set to ‘1’, the base station shall include this field and set it to the CDMA Channel number, in the specified CDMA band class, corresponding to the CDMA frequency for the CDMA Channel as specified in [2]; otherwise, the base station shall omit this field.

3.7.3.3.2.30 Power Up Function Completion Message

MSG_TAG: PUFCM

Field	Length (bits)
RESERVED	6
LOC_IND	1
RESERVED_1	0 or 3
MS_LAT	0 or 22
MS_LONG	0 or 23
MS_LOC_TSTAMP	0 or 24

RESERVED - Reserved bits.

The base station shall set these bits to '000000'.

LOC_IND - Location indicator

If the base station is to include MS_LAT, MS_LONG, and MS_LOC_TSTAMP in this message, the base station shall set this field to '1'; otherwise, the base station shall set this field to '0'.

RESERVED_1 - Reserved bits.

If LOC_IND is equal to '1', the base station shall set these bits to '000'; otherwise, the base station shall not include this field.

MS_LAT - Mobile station latitude.

If LOC_IND is equal to '1', the base station shall set this field to the mobile station's latitude in units of 0.25 second, expressed as a two's complement signed number with positive numbers signifying North latitudes. The base station shall set this field to a value in the range -1296000 to 1296000 inclusive (corresponding to a range of -90° to +90°).

Otherwise, the base station shall not include this field.

MS_LONG - Mobile station longitude.

If LOC_IND is equal to '1', the base station shall set this field to the mobile station's longitude in units of 0.25 second, expressed as a two's complement signed number with positive numbers signifying East longitude. The base station shall set this field to a value in the range -2592000 to 2592000 inclusive (corresponding to a range of -180° to +180°).

Otherwise, the base station shall not include this field.

MS_LOC_TSTAMP - Time stamp.

If LOC_IND is equal to '1', the base station shall set this field to the time at which the mobile station's location parameters were received; otherwise, the base station shall not include this field.

This field is formatted as shown below.

Field	**Length (bits)**
HOURS	8
MINUTES	8
SECONDS	8
Note: All subfields contain two 4-bit BCD numbers giving the decimal value of the subfield. For example, if the minute is 53, the MINUTES subfield contains '01010011'.	

HOURS - Current hour (UTC).

The base station shall set this field to the current hour (UTC), in the range 0-23.

MINUTES - Current minutes (UTC).

The base station shall set this field to the current minutes (UTC), in the range 0-59.

SECONDS - Current seconds (UTC).

The base station shall set this field to the current seconds (UTC), in the range 0-59.

3.7.3.3.2.31 General Handoff Direction Message

MSG_TAG: GHDM

Field	Length (bits)
USE_TIME	1
ACTION_TIME	0 or 6
HDM_SEQ	2
SEARCH_INCLUDED	1
SRCH_WIN_A	0 or 4
SRCH_WIN_N	0 or 4
SRCH_WIN_R	0 or 4
T_ADD	0 or 6
T_DROP	0 or 6
T_COMP	0 or 4
T_TDROP	0 or 4
SOFT_SLOPE	0 or 6
ADD_INTERCEPT	0 or 6
DROP_INTERCEPT	0 or 6
EXTRA_PARMS	1
P_REV	0 or 8
PACKET_ZONE_ID	0 or 8
FRAME_OFFSET	0 or 4
PRIVATE_LCM	0 or 1
RESET_L2	0 or 1
RESET_FPC	0 or 1
SERV_NEG_TYPE	0 or 1

(continues on next page)

Field	Length (bits)
ENCRYPT_MODE	0 or 2
NOM_PWR_EXT	0 or 1
NOM_PWR	0 or 4
NUM_PREAMBLE	0 or 3
BAND_CLASS	0 or 5
CDMA_FREQ	0 or 11
RETURN_IF_HANDOFF_FAIL	0 or 1
COMPLETE_SEARCH	0 or 1
PERIODIC_SEARCH	0 or 1
SCR_INCLUDED	0 or 1
SERV_CON_SEQ	0 or 3
RECORD_TYPE	0 or 8
RECORD_LEN	0 or 8
Type-specific fields	0 or 8 × RECORD_LEN
SUP_CHAN_PARMS_INCLUDED	1
FOR_INCLUDED	0 or 1
FOR_SUP_CONFIG	0 or 2
NUM_FOR_SUP	0 or 3
USE_FOR_DURATION	0 or 1
FOR_DURATION	0 or 8
REV_INCLUDED	0 or 1
REV_DTX_DURATION	0 or 4
CLEAR_RETRY_DELAY	0 or 1
USE_REV_DURATION	0 or 1
REV_DURATION	0 or 8
NUM_REV_CODES	0 or 3
USE_T_ADD_ABORT	0 or 1
REV_PARMS_INCLUDED	0 or 1
T_MULCHAN	0 or 3
BEGIN_PREAMBLE	0 or 3
RESUME_PREAMBLE	0 or 3

(continues on next page)

Field	Length (bits)
USE_PWR_CNTL_STEP	1
PWR_CNTL_STEP	0 or 3
NUM_PILOTS	3

NUM_PILOTS occurrences of the following record:

{ (NUM_PILOTS)

PILOT_PN	9
PWR_COMB_IND	1
FOR_FUND_CODE_CHAN	8
FOR_SUP_INCLUDED	0 or 1
FOR_SUP_CHAN_REC Record	0 or 9 or (1 + 8 × NUM_FOR_SUP)

} (NUM_PILOTS)

FPC_SUBCHAN_GAIN	5
USE_PC_TIME	1
PC_ACTION_TIME	0 or 6
RLGAIN_TRAFFIC_PILOT	0 or 6
DEFAULT_RLAG	0 or 1
NNSCR_INCLUDED	0 or 1
RECORD_TYPE	0 or 8
RECORD_LEN	0 or 8
Type-specific fields	0 or 8 × RECORD_LEN
REV_FCH_GATING_MODE	1
REV_PWR_CNTL_DELAY_INCL	0 or 1
REV_PWR_CNTL_DELAY	0 or 2

(continues on next page)

Field	Length (bits)
D_SIG_ENCRYPT_MODE	0 or 3
ENC_KEY_SIZE	0 or 3
SYNC_ID_INCL	0 or 1
SYNC_ID_LEN	0 or 4
SYNC_ID	0 or (8 × SYNC_ID_LEN)
CS_SUPPORTED	1

USE_TIME - Use action time indicator.

This field indicates whether an explicit action time is specified in this message.

If an explicit action time is specified in this message, the base station shall set this field to '1'; otherwise, the base station shall set this field to '0'.

ACTION_TIME - Action time.

If the USE_TIME field is set to '1', the base station shall set this field to the System Time minus $FRAME\_OFFSET_S \times 1.25$ ms, in units of 80 ms (modulo 64), at which the handoff is to take effect. If the USE_TIME field is set to '0', the base station shall omit this field.

HDM_SEQ - *General Handoff Direction Message* sequence number.

This field is used by the mobile station in the *Power Measurement Report Message* to identify the order in which the reported pilot strengths are sent.

The base station shall set this field to the handoff message sequence number, as specified in 3.6.6.2.2.10.

SEARCH_INCLUDED - Pilot search parameters included.

If the mobile station is to change its pilot search parameters, the base station shall set this field to '1'; otherwise, the base station shall set this field to '0'.

SRCH_WIN_A - Search window size for the Active Set and Candidate Set.

If SEARCH_INCLUDED is set to '1', the base station shall include the field SRCH_WIN_A and set this field to the window size parameter shown in Table 2.6.6.2.1-1 corresponding to the number of PN chips that the mobile station is to search for pilots in the Active Set and the Candidate Set; otherwise, the base station shall omit this field.

SRCH_WIN_N - Search window size for the Neighbor Set.

If SEARCH_INCLUDED is set to '1', the base station shall include the field SRCH_WIN_N and set this field to the window size parameter shown in Table 2.6.6.2.1-1 corresponding to the search window size to by used by mobile stations for the Neighbor Set after completion of the handoff; otherwise, the base station shall omit this field.

SRCH_WIN_R - Search window size for the Remaining Set.

If SEARCH_INCLUDED is set to '1', the base station shall include the field SRCH_WIN_R and set this field to the window size parameter shown in Table 2.6.6.2.1-1 corresponding to the search window size to by used by mobile stations for the Remaining Set after completion of the handoff; otherwise, the base station shall omit this field.

T_ADD - Pilot detection threshold.

This value is used by the mobile station to trigger the transfer of a pilot from the Neighbor Set or Remaining Set to the Candidate Set (see 2.6.6.2.6) and to trigger the sending of the *Pilot Strength Measurement Message* or *Extended Pilot Strength Measurement Message* initiating the handoff process (see 2.6.6.2.5.2).

If SEARCH_INCLUDED is set to '1', the base station shall include the field T_ADD and set this field to the pilot detection threshold, expressed as an unsigned binary number equal to $\lfloor -2 \times 10 \times \log_{10} E_c/I_0 \rfloor$; otherwise, the base station shall omit this field.

T_DROP - Pilot drop threshold.

This value is used by mobile stations to start a handoff drop timer for pilots in the Active Set and the Candidate Set (see 2.6.6.2.3).

If SEARCH_INCLUDED is set to '1', the base station shall include the field T_DROP and set this field to the pilot drop threshold, expressed as an unsigned binary number equal to $\lfloor -2 \times 10 \times \log_{10} E_c/I_0 \rfloor$; otherwise, the base station shall omit this field.

T_COMP - Active Set versus Candidate Set comparison threshold.

The mobile station transmits a *Pilot Strength Measurement Message* or *Extended Pilot Strength Measurement Message* when the strength of a pilot in the Candidate Set exceeds that of a pilot in the Active Set by this margin (see 2.6.6.2.5.2).

If SEARCH_INCLUDED is set to '1', the base station shall include the field T_COMP and set this field to the threshold Candidate Set pilot to Active Set pilot ratio, in units of 0.5 dB; otherwise, the base station shall omit this field.

T_TDROP - Drop timer value.

Timer value after which an action is taken by the mobile station for a pilot that is a member of the Active Set or Candidate Set, and whose strength has not become greater than T_DROP. If the pilot is a member of the Active Set, a *Pilot Strength Measurement Message* or *Extended Pilot Strength Measurement Message* is issued. If the pilot is a member of the Candidate Set, it will be moved to the Neighbor Set.

If SEARCH_INCLUDED is set to '1', the base station shall include the field T_TDROP and set this field to the T_TDROP value shown in Table 2.6.6.2.3-1 corresponding to the drop timer value to be used by the mobile station; otherwise, the base station shall omit this field.

SOFT_SLOPE - The slope in the inequality criterion for adding a pilot to the active set, or dropping a pilot from the active set (see 2.6.6.2.3 and 2.6.6.2.5.2).

If SEARCH_INCLUDED is set to '1', the base station shall include the field SOFT_SLOPE in the additional fields and set this field as an unsigned binary number; otherwise, the base station shall omit this field.

ADD_INTERCEPT - The intercept in the inequality criterion for adding a pilot to the active set (see 2.6.6.2.5.2).

If SEARCH_INCLUDED is set to '1', the base station shall include the field ADD_INTERCEPT in the additional fields and set this field as a two's complement signed binary number in units of 0.5 dB; otherwise, the base station shall omit this field.

DROP_INTERCEPT - The intercept in the inequality criterion for dropping a pilot from the active set (see 2.6.6.2.3).

If SEARCH_INCLUDED is set to '1', the base station shall include the field DROP_INTERCEPT in the additional fields and set this field as a two' complement signed binary number in units of 0.5 dB; otherwise, the base station shall omit this field.

EXTRA_PARMS - Extra parameters included.

If the mobile station is to change FRAME_OFFSET, PRIVATE_LCM, ENCRYPT_MODE, NOM_PWR, BAND_CLASS, or CDMA_FREQ, or the mobile station is to perform a reset of the acknowledgment procedures, or the mobile station is to reset Forward Traffic Channel power control counters, the base station shall set this field to '1'; otherwise, the base station shall set this field to '0'.

P_REV - Protocol revision level.

If EXTRA_PARMS is set to '1', the base station shall set this field to the base station protocol revision level that the mobile station is to use after completion of the handoff; otherwise, the base station shall omit this field.

PACKET_ZONE_ID - Packet data services zone identifier.

If EXTRA_PARMS is set to ‘1’, the base station shall include the field PACKET_ZONE_ID and set this field as described below; otherwise, the base station shall omit this field.

If the base station supports a packet data service zone, the base station shall set this field to the non-zero packet data services zone identifier that the mobile station is to use after completion of the handoff.

If the base station does not support a packet data service zone, the base station shall set this field to ‘00000000’.

FRAME_OFFSET - Frame offset.

The Forward and Reverse Traffic Channel frames are delayed FRAME_OFFSET × 1.25 ms relative to system timing (see [2]).

If EXTRA_PARMS is set to ‘1’, the base station shall include the field FRAME_OFFSET and set this field to the Forward and Reverse Traffic Channel frame offset; otherwise, the base station shall omit this field.

PRIVATE_LCM - Private long code mask indicator.

This field is used to change the long code mask after a hard handoff.

If EXTRA_PARMS is set to ‘1’, the base station shall include the field PRIVATE_LCM and set this field as described below; otherwise, the base station shall omit this field.

If the private long code mask is to be used after the handoff, the base station shall set this field to ’1’; otherwise, the base station shall set this field to ‘0’.

RESET_L2 - Reset acknowledgment procedures command.

This field is used to reset acknowledgment processing in the mobile station.

If EXTRA_PARMS is set to ‘1’, the base station shall include the field RESET_L2 and set this field as described below; otherwise, the base station shall omit this field.

If the field is included and the mobile station is to reset its acknowledgment procedures, the base station shall set this field to ‘1’; otherwise, the base station shall set this field to ‘0’.

RESET_FPC - Reset Forward Traffic Channel power control.

This field is used to reset the Forward Traffic Channel power control counters.

If EXTRA_PARMS is set to ‘1’, the base station shall include the field RESET_FPC and set this field as described below; otherwise, the base station shall omit this field.

The base station shall set this field to ‘0’ if the Forward Traffic Channel power control counters are to be maintained after completion of the handoff. If the counters are to be initialized as specified in 2.6.4.1.1.1, then the base station shall set this field to ‘1’.

SERV_NEG_TYPE - Service negotiation type.

If EXTRA_PARMS is set to ‘1’, the base station shall include the field SERV_NEG_TYPE and set this field as described below; otherwise, the base station shall omit this field.

If the mobile station is to use service negotiation, the base station shall set this field to ‘1’. If the mobile station is to use service option negotiation, the base station shall set this field to ‘0’.

ENCRYPT_MODE - Message encryption mode.

If EXTRA_PARMS is set to ‘1’, the base station shall include the field ENCRYPT_MODE and set this field to the ENCRYPT_MODE value shown in Table 3.7.2.3.2.8-2 corresponding to the encryption mode that is to be used for messages sent on the Forward and Reverse Traffic Channels, as specified in 2.3.12.2; otherwise, the base station shall omit this field.

NOM_PWR_EXT - Extended nominal transmit power.

If EXTRA_PARMS is set to ‘1’, the base station shall include this field and set this field as described below; otherwise, the base station shall omit this field.

If the mobile station is being handed off to a base station operating in Band Class 0 or Band Class 3, the base station shall set this field to ‘0’; otherwise, the base station shall set it as follows:

If the correction factor to be used by the mobile station in the open loop power estimate is between -24 dB and -9 dB inclusive, the base station shall set this field to ‘1’; otherwise (the correction factor is in the range -8 dB to 7 dB inclusive), the base station shall set this field to ‘0’.

NOM_PWR - Nominal transmit power offset.

If EXTRA_PARMS is set to ‘1’, the base station shall include the field NOM_PWR and set this field to the correction factor to be used by the mobile station in the open loop power estimate, expressed as a two’s complement value in units of 1 dB (see [2]); otherwise, the base station shall omit this field.

NUM_PREAMBLE - Traffic Channel preamble length.

If EXTRA_PARMS is set to ‘0’, the base station shall omit the NUM_PREAMBLE field; otherwise, the base station shall include this field and set it to the length of Traffic Channel preamble that the mobile station is to send when performing a handoff; as follows:

If, after the handoff, radio configuration 1 or radio configuration 2 is to be used, the base station shall set NUM_PREAMBLE to the Traffic Channel preamble length in 20 ms units; otherwise, the base station shall set NUM_PREAMBLE to the value shown in Table 3.7.3.3.2.17-1 corresponding to the Traffic Channel preamble length in 1.25 ms units.

BAND_CLASS - Band class.

If EXTRA_PARMS is set to '1', the base station shall include the field BAND_CLASS and set this field to the CDMA band class corresponding to the CDMA frequency assignment for the CDMA Channel as specified in [30]; otherwise, the base station shall omit this field.

CDMA_FREQ - Frequency assignment.

If EXTRA_PARMS is set to '1', the base station shall include the field CDMA_FREQ and set this field to the CDMA Channel number, in the specified CDMA band class, corresponding to the CDMA frequency assignment for the CDMA Channel as specified in [2]; otherwise, the base station shall omit this field.

RETURN_IF_HANDOFF_FAIL - Return on failure flag.

If EXTRA_PARMS is set to '1', the base station shall include the field RETURN_IF_HANDOFF_FAIL and set this field as described below; otherwise, the base station shall omit this field.

If the base station includes this field, it shall set this field to '1' if the mobile station is to resume the use of the Active Set on the Serving Frequency following an unsuccessful hard handoff attempt, as specified in 2.6.6.2.8.2; otherwise, the base station shall set this field to '0'.

COMPLETE_SEARCH - Flag to complete search.

If RETURN_IF_HANDOFF_FAIL is included and is set to '1', the base station shall include the field COMPLETE_SEARCH and set this field as described below; otherwise, the base station shall omit this field.

If the base station includes this field, it shall set this field to '1' if the mobile station is to complete the search of the Candidate Frequency Search Set before resuming the use of the Active Set on the Serving Frequency when an inter-frequency handoff attempt is unsuccessful, as specified in 2.6.6.2.8.2; otherwise, the base station shall set this field to '0'.

PERIODIC_SEARCH - Flag to search the Candidate Frequency periodically.

If EXTRA_PARMS is set to '1', the base station shall include the field PERIODIC_SEARCH and set this field as described below; otherwise, the base station shall omit this field.

If the base station includes this field, it shall set this field to '1' if the mobile station is to periodically search the Candidate Frequency, as specified in 2.6.6.2.8.3; otherwise, the base station shall set this field to '0'.

SCR_INCLUDED - Service Configuration Record included indicator.

If EXTRA_PARMS is set to '1', the base station shall include the field SCR_INCLUDED and shall set this field as described below; otherwise, the base station shall omit this field.

The base station shall set this field to '1' if it includes Service Configuration Record in the message; otherwise, the base station shall set this field to '0'.

SERV_CON_SEQ - Connect sequence number.

If SCR_INCLUDED is included and is set to '1', the base station shall include the field SERV_CON_SEQ and shall set this field to the connect sequence number pertaining to this service configuration as specified in 3.6.4.1.2.1.2.

If SCR_INCLUDED is included and is set to '1', the base station shall include one occurrence of the following three-field record to specify the service configuration.

RECORD_TYPE - Information record type.

If SCR_INCLUDED is included and is set to '1', the base station shall include the field RECORD_TYPE and shall set this field to the record type value shown in Table 3.7.5-1 corresponding to the Service Configuration information record.

RECORD_LEN - Information record length.

If SCR_INCLUDED is included and is set to '1', the base station shall include the field RECORD_LEN and shall set this field to the number of octets included in the type-specific fields of the Service Configuration information record.

Type-specific fields - Type-specific fields.

If SCR_INCLUDED is included and is set to '1', the base station shall include the type specific fields and shall set these fields as specified in 3.7.5.7 for the Service Configuration information record.

SUP_CHAN_PARMS_INCLUDED - Supplemental code channel parameters included indicator.

The base station shall set this field to '1' if the base station includes the FOR_INCLUDED, REV_INCLUDED, and REV_PARMS_INCLUDED fields in the message; otherwise, the base station shall set this field to '0'.

FOR_INCLUDED - Forward assignment information included indicator.

If SUP_CHAN_PARMS_INCLUDED is set to '1', the base station shall include the field FOR_INCLUDED and set this field as described below; otherwise, the base station shall omit this field.

If the base station includes this field, it shall set this field to '1' if Forward Supplemental Code Channel assignment information is included in the message; otherwise, the base station shall set this field to '0'.

FOR_SUP_CONFIG - Forward Supplemental Code Channel configuration indicator.

If FOR_INCLUDED is included and is set to '1', the base station shall include the field FOR_SUP_CONFIG and set this field according to the following rules:

The base station shall set this field to '00' if Forward Supplemental Code Channels are not specified in the message, and the mobile station is to stop processing all Forward Supplemental Code Channels.

The base station shall set this field to '01' if Forward Supplemental Code Channels are not specified in the message, and the mobile station is to start processing the Forward Supplemental Code Channels previously stored in its Code Channel List, $CODE\_CHAN\_LIST_S$.

The base station shall set this field to '10' if the Forward Supplemental Code Channels are specified in the message, and the mobile station is to stop processing all Forward Supplemental Code Channels in $CODE\_CHAN\_LIST_S$, and to update the $CODE\_CHAN\_LIST_S$, according to the information contained in the message.

The base station shall set this field to '11' if the Forward Supplemental Code Channels are specified in the message, and the mobile station is to update its Code Channel List, $CODE\_CHAN\_LIST_S$, according to the information contained in the message and to start processing the Forward Supplemental Code Channels.

NUM_FOR_SUP - Number of Forward Supplemental Code Channels.

If FOR_SUP_CONFIG is included and is set to '10' or '11', the base station shall include the field NUM_FOR_SUP and set it to the number of Forward Supplemental Code Channels assigned to the mobile station; otherwise, the base station shall omit this field. NUM_FOR_SUP shall not exceed the maximum number of Forward Supplemental Code Channels for the negotiated multiplex option.

USE_FOR_DURATION - Use forward duration indicator.

If FOR_SUP_CONFIG is included and is set to '01' or '11', the base station shall include the field USE_FOR_DURATION and set this field as described below; otherwise the base station shall omit this field.

The base station shall set this field to '1' if the FOR_DURATION field is included in the message and the mobile station is to process the Forward Supplemental Code Channels for a time duration indicated by FOR_DURATION.

The base station shall set this field to '0' if the mobile station is to process the Forward Supplemental Code Channels for an indefinite duration (i.e., the mobile station is to continue processing Forward Supplemental Code Channels until it receives a subsequent *Supplemental Channel Assignment Message* or a *General Handoff Direction Message* that specifies a different Forward Supplemental Code Channel assignment.

FOR_DURATION - Duration of Forward Supplemental Code Channel assignment.

If USE_FOR_DURATION is included and is set to '1', the base station shall include the field FOR_DURATION and set this field to the allocated duration, in units of 80 ms, for which the mobile station is to process the Forward Supplemental Code Channels; otherwise, the base station shall omit this field.

REV_INCLUDED - Reverse assignment information included indicator.

If SUP_CHAN_PARMS_INCLUDED is set to '1', the base station shall include the field REV_INCLUDED and set this field as described below; otherwise, the base station shall omit this field.

If the base station includes this field, it shall set this field to '1' if Reverse Supplemental Code Channel assignment information is included in the message; otherwise, the base station shall set this field to '0'.

REV_DTX_DURATION - Reverse Discontinuous Transmission Duration.

If REV_INCLUDED is included and is set to '1', the base station shall include the field REV_DTX_DURATION; otherwise the base station shall omit this field.

If the base station includes this field, it shall set this field to the maximum duration of time in units of 20 ms that the mobile station is allowed to stop transmission on a Reverse Supplemental Code Channel within the reverse assignment duration. The base station shall set this field to '0000' if the mobile station is to stop using a Reverse Supplemental Code Channel once it has stopped transmitting on that Reverse Supplemental Code Channel. The base station shall set this field to '1111' if the mobile station is allowed to resume transmission on a Reverse Supplemental Code Channel at any time within the reverse assignment duration.

CLEAR_RETRY_DELAY - Clear retry delay indicator.

If REV_INCLUDED is included and is set to '1', the base station shall include the field CLEAR_RETRY_DELAY and set this field as described below; otherwise the base station shall omit this field.

The base station shall set this field to '1' to indicate that the mobile station is to clear any existing retry delay which it has stored (see 2.6.6.2.5.1); otherwise, the base station shall set this field to '0'.

USE_REV_DURATION - Use reverse duration indicator.

If REV_INCLUDED is included and is set to '1', the base station shall include the field USE_REV_DURATION and set this field as described below; otherwise the base station shall omit this field.

The base station shall set this field to '1' if the REV_DURATION field is included in the message and the mobile station is allowed to transmit on the Reverse Supplemental Code Channels for a time duration indicated by REV_DURATION.

The base station shall set this field to '0' if the mobile station is allowed to transmit on the Reverse Supplemental Code Channels for an indefinite duration (i.e., the mobile station may continue to transmit on the Reverse Supplemental Code Channels until it receives a subsequent *Supplemental Channel Assignment Message* or a *General Handoff Direction Message* that specifies a different Reverse Supplemental Code Channel assignment.

REV_DURATION - Duration of Reverse Supplemental Code Channel Assignment.

If USE_REV_DURATION is included and is set to '1', the base station shall include the field REV_DURATION and set this field to the allocated duration, in units of 80 ms, for which the mobile station may transmit on Reverse Supplemental Code Channels; otherwise the base station shall omit this field.

NUM_REV_CODES - Number of Reverse Supplemental Code Channels.

If REV_INCLUDED is included and is set to '1', the base station shall include the field NUM_REV_CODES and set this field to the number of Reverse Supplemental Code Channels which are assigned to the mobile station; otherwise the base station shall omit this field.

USE_T_ADD_ABORT - Reverse use T_ADD abort indicator.

If REV_INCLUDED is included and is set to '1', the base station shall include the field USE_T_ADD_ABORT and set this field as described below; otherwise the base station shall omit this field.

The base station shall set this field to '1' to indicate that the mobile station is to use the T_ADD Reverse Supplemental Code Channel abort feature for this reverse assignment; otherwise, the base station shall set this field to '0'.

REV_PARMS_INCLUDED - Reverse assignment parameters included indicator.

If SUP_CHAN_PARMS_INCLUDED is set to '1', the base station shall include the field REV_PARMS_INCLUDED and set this field as described below; otherwise, the base station shall omit this field.

If the base station includes this field, it shall set this field to '1' if the following three fields are included in the message; otherwise, the base station shall set this field to '0'.

T_MULCHAN - *Supplemental Channel Request Message* pilot strength reporting offset.

If REV_PARMS_INCLUDED is included and is set to '1', the base station shall include the field T_MULCHAN and set this field as described below; otherwise the base station shall omit this field.

The base station shall set this field to the threshold offset that the mobile station is to use when reporting neighbor pilot strength measurements in a *Supplemental Channel Request Message*. The mobile station is to interpret this field as an offset to T_ADD ranging from 0.5 dB (corresponding to T_MULCHAN = '000') to 4.0 dB (corresponding to T_MULCHAN = '111'), in 0.5 dB increments.

BEGIN_PREAMBLE - Number of preamble frames on Reverse Supplemental Code Channels at the beginning of transmission on Reverse Supplemental Code Channel.

If REV_PARMS_INCLUDED is included and is set to '1', the base station shall include the field BEGIN_PREAMBLE and set this field to the number of Reverse Supplemental Code Channel preamble frames that the mobile station is to send when beginning transmission on Reverse Supplemental Code Channels; otherwise the base station shall omit this field.

RESUME_PREAMBLE - Number of preamble frames on Reverse Supplemental Code Channels at the resumption of transmission.

If REV_PARMS_INCLUDED is included and is set to '1', the base station shall include the field RESUME_PREAMBLE and set this field to the number of Reverse Supplemental Code Channel preamble frames that the mobile station is to send when resuming transmission on a Reverse Supplemental Code Channel following an autonomous suspension of transmission on an allocated Supplemental Code Channel; otherwise the base station shall omit this field.

USE_PWR_CNTL_STEP - Power control step size indicator.

The base station shall set this field to '1' if the field PWR_CNTL_STEP is included in the message.

PWR_CNTL_STEP - Power control step size.

If USE_PWR_CNTL_STEP is set to '1', then the base station shall include the field PWR_CNTL_STEP and set this field to the step size that the mobile station is to use for closed loop power control, according to Table 3.7.3.3.2.25-1; otherwise, the base station shall omit this field.

NUM_PILOTS - Number of pilots included in the message.

The base station shall set this field to the number of pilots included in the message. The base station shall set this field to an integer that is equal to or greater than 1.

The base station shall include one occurrence of the following four-part record for each of the NUM_PILOTS pilots included in the message:

PILOT_PN - Pilot PN sequence offset index.

The base station shall set this field to the pilot PN sequence offset for this pilot in units of 64 PN chips.

PWR_COMB_IND - Power control symbol combining indicator.

If the Forward Traffic Channel associated with this pilot will carry the same closed-loop power control subchannel bits as that of the previous pilot in this message, the base station shall set this field to '1'; otherwise, the base station shall set this field to '0'. The base station shall set this field to '0' in the first record in the pilot list.

FOR_FUND_CODE_CHAN - Forward Fundamental Channel.

The base station shall set this field to the code channel index to be used for the Forward Fundamental Channel associated with this pilot.

FOR_SUP_INCLUDED - Forward Supplemental Code Channel included.

The base station shall include this field if FOR_SUP_CONFIG is included and is set to '10' or '11'. If included, the base station shall set this field to '1' if there are Supplemental Code Channels associated with this pilot.

FOR_SUP_CHAN_REC - Forward Supplemental Code Channel record

If FOR_SUP_INCLUDED is set to '1', the base station shall include the record FOR_SUP_CHAN_REC and set its fields as described below; otherwise, the base station shall omit this record.

FOR_SUP_CHAN_REC contains information about Forward Supplemental Code Channels associated with this pilot, and consists of the field EXPL_CODE_CHAN, and either the BASE_CODE_CHAN field or NUM_FOR_SUP occurrences of the FOR_SUP_CODE_CHAN field, as shown below.

EXPL_CODE_CHAN	1
BASE_CODE_CHAN	0 or 8

If EXPL_CODE_CHAN is equal to '1', NUM_FOR_SUP occurrences of the following field:

{ (NUM_FOR_SUP)

FOR_SUP_CODE_CHAN	8

} (NUM_FOR_SUP)

EXPL_CODE_CHAN - Explicit code channel indicator.

The base station shall set this field to '1' to indicate explicit assignment of each Forward Supplemental Code Channel by means of the field FOR_SUP_CODE_CHAN. The base station shall set this field to '0' if the mobile station is to use NUM_FOR_SUP adjacent code channels beginning with index BASE_CODE_CHAN (i.e., BASE_CODE_CHAN through BASE_CODE_CHAN + NUM_FOR_SUP - 1).

In both cases (i.e., the explicit code channel list format and range format), the order of the code channel indices is the same for all pilots specified in this message (i.e., for each pilot, the ith entry in the list indicates the code channel index to be used for the ith Forward Supplemental Code Channel associated with that pilot).

BASE_CODE_CHAN - Base code channel index.

If the EXPL_CODE_CHAN field is included and is set to '0', the base station shall include the field BASE_CODE_CHAN and set this field as described below; otherwise the base station shall omit this field.

The base station shall set this field to the base code channel index (see [2]) in the range of 1 to (63 - NUM_FOR_SUP + 1), inclusive, that the mobile station is to use as the first Forward Supplemental Code Channel associated with this pilot. The mobile station is to use code channel index (BASE_CODE_CHAN + *i* - 1), where *i* ranges from 1 to NUM_FOR_SUP, for the ith Forward Supplemental Code Channel associated with this pilot.

FOR_SUP_CODE_CHAN - Forward Supplemental Code Channel.

If EXPL_CODE_CHAN is included and is set to '1, the base station shall include NUM_FOR_SUP occurrences of the field FOR_SUP_CODE_CHAN and set this field as described below; otherwise the base station shall omit this field.

The base station shall set the ith occurrence of this field to the code channel index (see [2]), in the range 1 to 63 inclusive, that the mobile station is to use for the ith Forward Code Channel associated with this pilot.

FPC_SUBCHAN_GAIN - Forward power control subchannel relative gain.

The base station shall set FPC_SUBCHAN_GAIN equal to the power level of the forward link power control subchannel relative to that of 20 ms frames at a 9600 bps or 14400 bps rate on the Forward Fundamental Channel or the Forward Dedicated Control Channel indicated by $FPC\_PRI\_CHAN_S$. The base station shall set the value in units of 0.25 dB.

USE_PC_TIME - Use power control action time indicator.

This field indicates whether an explicit time [PC_ACTION_TIME] at which a new value for Power Control Subchannel to traffic ratio (FPC_SUBCHAN_GAIN] takes effect is specified in the message.

If an explicit action time is specified in this message, the base station shall set this field to ‘1’; otherwise, the base station shall set this field to ‘0’.

PC_ACTION_TIME - Power Control Subchannel gain action time.

If the USE_PC_TIME field is set to ‘1’, the base station shall set this field to the System Time minus $FRAME\_OFFSET_S \times 1.25$ ms, in units of 80 ms (modulo 64), at which FPC_SUBCHAN_GAIN specified in this message is to take effect. If the USE_PC_TIME field is set to ‘0’, the base station shall omit this field.

RLGAIN_TRAFFIC_PILOT - Gain adjustment of the Reverse Traffic Channel relative to the Reverse Pilot Channel power for Radio Configurations greater than 2.

If EXTRA_PARMS is set to ‘1’, the base station shall include this field and set it to the correction factor to be used by mobile stations in setting the power of a code channel, expressed as a two’s complement value in units of 0.125 dB (see [2]); otherwise, the base station shall omit this field.

DEFAULT_RLAG - Default reverse link attribute gain used indicator.

If EXTRA_PARMS is set to ‘0’, the base station shall omit this field; otherwise, the base station shall set this field as follows.

If the mobile station is to use the default values for the reverse link attribute gain, as specified in [2] after completion of handoff, the base station shall set this field to ‘1’; otherwise, the base station shall set this field to ‘0’.

NNSCR_INCLUDED - Non-negotiable Service Configuration Record included indicator.

The base station shall omit this field, if EXTRA_PARMS is set to ‘0’; otherwise, the base station shall include this field and set this field as described below:

The base station shall set this field to ‘1’, if the Non-negotiable Service Configuration record is included in this message; otherwise, the base station shall set this field to ‘0’.

If NNSCR_INCLUDED is included and is set to '1', the base station shall include one occurrence of the following three-field record to specify the non-negotiable service configuration parameters.

RECORD_TYPE - Information record type.

If NNSCR_INCLUDED is included and is set to '1', the base station shall include the field RECORD_TYPE and shall set this field to the record type value shown in Table 3.7.5-1 corresponding to the Non-Negotiable Service Configuration information record.

RECORD_LEN - Information record length.

If NNSCR_INCLUDED is included and is set to '1', the base station shall include the field RECORD_LEN and shall set this field to the number of octets included in the type-specific fields of the Non-Negotiable Service Configuration information record.

Type-specific fields - Type-specific fields.

If NNSCR_INCLUDED is included and is set to '1', the base station shall include the type specific fields and shall set these fields as specified in 3.7.5.20 for the Non-Negotiable Service Configuration information record.

REV_FCH_GATING_MODE - Reverse eighth gating mode indicator.

The base station shall set this field to '1' if the mobile station is allowed to perform the reverse eighth gating mode after handoff; otherwise, the base station shall set this field to '0'.

REV_PWR_CNTL_DELAY_INCL - Reverse power control delay included indicator.

If REV_FCH_GATING_MODE is set to '0', the base station shall omit this field; otherwise, the base station shall include this field and set it as follows:

The base station shall set this field to '1' if REV_PWR_CNTL_DELAY is included in this message; otherwise, the base station shall set this field to '0'.

REV_PWR_CNTL_DELAY - The reverse power control delay.

If REV_PWR_CNTL_DELAY_INCL is set to '0', the base station shall omit this field; otherwise, the base station shall include this field and set it as follows:

The base station shall set this field to the closed-loop reverse power control delay minus one (the closed-loop reverse power control delay is the time between the end of a gated-on reverse PCG and the beginning of the reverse PCG where the corresponding feedback is sent on the Forward Power Control Subchannel, (see [2]), in units of 1.25 ms.

D_SIG_ENCRYPT_MODE - Dedicated channel encryption mode indicator.

If ENCRYPT_MODE is included and is set to '11', the base station shall include this field and shall set it to the dedicated channel signaling encryption mode, as shown in Table 3.7.4.5-1; otherwise the base station shall omit this field.

ENC_KEY_SIZE - Encryption key size indication.

If ENCRYPT_MODE is included and is set to '10' or '11', the base station shall include this field and set it to the encryption key size, as shown in Table 3.7.4.5-2; otherwise, the base station shall omit this field.

SYNC_ID_INCL - Service Configuration synchronization identifier included indicator.

If either the SCR_INCLUDED field is included and is set to '1' or the NNSCR_INCLUDED field is included and is set to '1', the base station shall include this field; otherwise, the base station shall omit this field. If included, the base station shall set this field as follows:

The base station shall set this field to '1' if the SYNC_ID field is included in this message; otherwise, the base station shall set this field to '0'.

SYNC_ID_LEN - Service Configuration synchronization identifier length.

If the SYNC_ID_INCL field is not included or is included and is set to '0', the base station shall omit this field; otherwise, the base station shall include this field and set it as follows:

The base station shall set this field to the length (in octets) of the SYNC_ID field included in this message. The base station shall set this field to a value larger than zero.

SYNC_ID - Service Configuration synchronization identifier.

If the SYNC_ID_INCL field is not included or is included and is set to '0', the base station shall omit this field; otherwise, the base station shall include this field and set it as follows:

The base station shall set this field to the synchronization identifier corresponding to the service configuration conveyed by this message.

CS_SUPPORTED - Concurrent Services supported indicator.

If the base station supports concurrent services, the base station shall set this field to '1'; otherwise, the base station shall set this field to '0'.

3.7.3.3.2.32 Resource Allocation Message

MSG_TAG: RAM

Field	Length (bits)
USE_TIME	1
ACTION_TIME	0 or 6
FPC_PRI_CHAN	1

USE_TIME - Use action time indicator.

This field indicates whether an explicit action time is specified in this message.

If an explicit action time is specified in this message, the base station shall set this field to '1'; otherwise, the base station shall set this field to '0'.

ACTION_TIME - Action time.

If the USE_TIME field is set to '1', the base station shall set this field to the System Time minus $FRAME\_OFFSET_S \times 1.25$ ms, in units of 80 ms (modulo 64), at which this message is to take effect. If the USE_TIME field is set to '0', the base station shall omit this field.

FPC_PRI_CHAN - Power Control Subchannel indicator.

The base station shall set this field to '0' if the mobile station is to perform the primary inner loop estimation on the received Forward Fundamental Channel. The base station shall set this field to '1' if the mobile station is to perform the primary inner loop estimation on the received Forward Dedicated Control Channel.

If the F-CPCCH is assigned, the base station will multiplex the Power Control Subchannel on the F-CPCCH; otherwise:

If this field is set to '0', the base station will multiplex the Power Control Subchannel on the Forward Fundamental Channel; otherwise, the base station will multiplex the Power Control Subchannel on the Forward Dedicated Control Channel.

3.7.3.3.2.33 Resource Allocation Mini Message

MSG_TAG: RAMM

Field	Length (bits)
USE_TIME	1
ACTION_TIME	0 or 6
FPC_PRI_CHAN	1

USE_TIME - Use action time indicator.

This field indicates whether an ACTION_TIME is specified in this message.

If an ACTION_TIME is specified in this message, the base station shall set this field to '1'; otherwise, the base station shall set this field to '0'.

ACTION_TIME - Action time.

If the USE_TIME field is set to '1', the base station shall set this field to the System Time minus $FRAME\_OFFSET_S \times 1.25$ ms, in units of 80 ms (modulo 64), at which the message is to take effect. If the USE_TIME field is set to '0', the base station shall omit this field.

FPC_PRI_CHAN - Power Control Subchannel indicator.

The base station shall set this field to '0' if the mobile station is to perform the primary inner loop estimation on the received Forward Fundamental Channel. The base station shall set this field to '1' if the mobile station is to perform the primary inner loop estimation on the received Forward Dedicated Control Channel.

If the F-CPCCH is assigned, the base station will multiplex the Power Control Subchannel on the F-CPCCH; otherwise:

If this field is set to '0', the base station will multiplex the Power Control Subchannel on the Forward Fundamental Channel; otherwise, the base station will multiplex the Power Control Subchannel on the Forward Dedicated Control Channel.

3.7.3.3.2.34 Extended Release Message

MSG_TAG: ERM

Field	Length (bits)
USE_TIME	1
ACTION_TIME	0 or 6
CH_IND	3
GATING_RATE_INCL	1
PILOT_GATING_RATE	0 or 2
USE_EXT_CH_IND	1
EXT_CH_IND	0 or 5
PDCH_CONTROL_HOLD	0 or 1
SWITCHING_PARMS_INCL	0 or 1
NUM_SOFT_SWITCHING_FRAMES_CHM	0 or 4
NUM_SOFTER_SWITCHING_FRAMES_CHM	0 or 4
DIRECT_TO_IDLE_INFO_INCL	1

If DIRECT_TO_IDLE_INFO_INCL is set to '1', the following DIRECT TO IDLE record shall be included:

{ (DIRECT TO IDLE Record)

RELEASE_TYPE	3
SID	0 or 15
NID	0 or 16
FREQ_INCL	0 or 1
CDMA_FREQ	0 or 11
BAND_CLASS	0 or 5
PAGE_CH	0 or 3
PRAT	0 or 2
SR1_BCCH_CODE_CHAN_NON_TD	0 or 6
SR1_CRAT_NON_TD	0 or 1
SR1_BRAT_NON-TD	0 or 2
SR1_TD_MODE	0 or 2
SR1_BCCH_CODE_CHAN_TD	0 or 6
SR1_CRAT_TD	0 or 1
SR1_BRAT_TD	0 or 2
SR1_TD_POWER_LEVEL	0 or 2
NUM_PILOTS_D2I_INCL	0 or 1

Field	Length (bits)
NUM_PILOTS_D2I	0 or 3

NUM_PILOTS_D2I occurrence of the following record:

{ (NUM_PILOTS_D2I)

PILOT_PN	9

} (NUM_PILOTS_D2I)

}(DIRECT TO IDLE Record)

RER_MODE_ENABLED	1
RER_MAX_NUM_MSG_IDX	0 or 3
RER_TIME	0 or 3
RER_TIME_UNIT	0 or 2
MAX_RER_PILOT_LIST_SIZE	0 or 3
RSC_MODE_SUPPORTED	1
MAX_RSC_END_TIME_UNIT	0 or 2
MAX_RSC_END_TIME_VALUE	0 or 4
REQ_RSCI_INCL	0 or 1
REQ_RSCI	0 or 4
IGNORE_QPCH	0 or 1
TKZ_MODE_ENABLED	1
TKZ_ID	0 or 8
TKZ_MAX_NUM_MSG_IDX	0 or 3
TKZ_UPDATE_PRD	0 or 4
TKZ_LIST_LEN	0 or 4
TKZ_TIMER	0 or 8
TBR_RAND_SUPPR_ENABLE	1
TBR_RAND_WINDOW	2
BCMC_INFO_INCL	0 or 1
NUM_FSCH	0 or 3
NUM_BCMC_PROGRAMS	0 or 6

If NUM_FSCH field is included, then NUM_FSCH plus one occurrences of the following variable length record:

{ (NUM_FSCH + 1)

FSCH_RECORD_LEN	8

Field	Length (bits)
FSCH_CODE_CHAN	11
FSCH_MUX_OPTION	16
FSCH_RC	5
FSCH_CODING	1
FSCH_OUTERCODE_INCL	1
FSCH_OUTERCODE_RATE	0 or 3
FSCH_OUTERCODE_OFFSET	0 or 6
FSCH_RATE	4
FSCH_FRAME_40_USED	1
FSCH_FRAME_80_USED	1
FSCH_RECORD_RESERVED	0-7 (as needed)
} (NUM_FSCH + 1)	

If NUM_BCMC_PROGRAMS field is included, then NUM_BCMC_PROGRAMS plus one occurrences of the following variable length record:

{ (NUM_BCMC_PROGRAMS + 1)

BCMC_PROGRAM_ID_LEN	5
BCMC_PROGRAM_ID	BCMC_PROGRAM_ID_LEN+ 1
BCMC_FLOW_DISCRIMINATOR_LEN	3
NUM_FLOW_DISCRIMINATOR	BCMC_FLOW_DISCRIMINATOR_LEN

NUM_FLOW_DISCRIMINATOR+1 or 1 occurrences of the following variable length record

{ (NUM_FLOW_DISCRIMINATOR+1) or 1

BCMC_FLOW_DISCRIMINATOR	BCMC_FLOW_DISCRIMINATOR_LEN
NUM_LPM_ENTRIES	3

NUM_LPM_ENTRIES plus one occurrences of the following variable-length record:

{ (NUM_LPM_ENTRIES + 1)

FSCH_ID	7
BSR_ID	3

} (NUM_LPM_ENTRIES + 1)

} (NUM_FLOW_DISCRIMINATOR+1) or 1

} (NUM_BCMC_PROGRAMS + 1)

USE_TIME - Use action time indicator.

This field indicates whether an explicit action time is specified in this message.

If an explicit action time is specified in this message, the base station shall set this field to '1'; otherwise, the base station shall set this field to '0'.

ACTION_TIME - Action time.

If the USE_TIME field is set to '1', the base station shall set this field to the System Time minus $FRAME\_OFFSET_S \times 1.25$ ms, in units of 80 ms (modulo 64), at which the message is to take effect. If the USE_TIME field is set to '0', the base station shall omit this field.

CH_IND - Channel Indicator.

The base station shall set this field as shown in Table 3.7.3.3.2.34-1, to release physical resources.

Table 3.7.3.3.2.34-1. Channel Indicator

CH_IND (binary)	Physical Resource(s) Released
000	No Fundamental Channel, Dedicated Control Channel, or Continuous Reverse Pilot Channel released
001	Fundamental Channel
010	Dedicated Control Channel
011	Reserved
100	Continuous Reverse Pilot Channel
101	Fundamental Channel and Continuous Reverse Pilot Channel
110	Reserved
111	Fundamental Channel, Dedicated Control Channel, and Continuous Reverse Pilot Channel

GATING_RATE_INCL - Reverse pilot gating rate included flag.

The base station shall set this field to '1' if the PILOT_GATING_RATE field is included, otherwise it shall set this field to '0'.

PILOT_GATING_RATE - Actual Reverse Pilot gating Rate.

If the GATING_RATE_INCL field is set to '1', then the base station shall set this field to the PILOT_GATING_RATE field shown in Table 3.7.3.3.2.34-2 corresponding to the actual gating rate on the Reverse Pilot Channel; otherwise, the base station shall omit this field.

Table 3.7.3.3.2.34-2. Actual Reverse Pilot Gating rate

PILOT_GATING_RATE field (binary)	Meaning
00	Gating rate 1
01	Gating rate ½
10	Gating rate ¼
11	Reserved

USE_EXT_CH_IND - Use EXT_CH_IND to set channel configuration

The base station shall set this field to '1' if the EXT_CH_IND field is included in this message and is used to set the channel configuration; otherwise, the base station shall set this field to '0'.

EXT_CH_IND - Extended Channel Indicator.

If the USE_EXT_CH_IND field is set to '0', the base station shall omit this field; otherwise, the base station shall include this field and set it as follows:

The base station shall set this field to the desired channel configuration shown in Table 2.7.1.3.2.4-11.

PDCH_CONTROL_HOLD - Packet Data Channel Control Hold mode indication.

If the USE_EXT_CH_IND field is set to '0', the base station shall omit this field; otherwise, the base station shall include this field and set it as follows:

The base station shall set this field to '1' to instruct the mobile station to transition to the Packet Data Channel Control Hold Mode.

If EXT_CH_IND signals the allocation of F-FCH, this field shall be set to '0'.

Table 3.7.3.3.2.34-3 shows the valid combinations of CH_IND, EXT_CH_IND, and PDCH_CONTROL_HOLD.

Table 3.7.3.3.2.34-3. Valid CH_IND, EXT_CH_IND, and PDCH_CONTROL_HOLD

Current EXT_CH_IND (binary)	CH_IND (binary)	EXT_CH_IND (binary)	PDCH_CONTROL_HOLD (binary)	Physical Resource(s) Released
Any	111	Omit	0	All assigned channels
00001	XXX	00001	1	Continuous R-PICH and R-CQICH
00010	XXX	00010	1	Continuous R-PICH and R-CQICH
00011	000	Omit	Omit	F-PDCH and R-CQICH
00100	XXX	00100	1	Continuous R-PICH and R-CQICH
00100	000	Omit	Omit	F-PDCH and R-CQICH
00100	100	Omit	Omit	F-PDCH and R-CQICH Continuous R-PICH
00101	XXX	00011	0	R-DCCH
00101	010	Omit	Omit	F-PDCH, R-CQICH, R-DCCH
00110	XXX	00011	0	F/R-DCCH
00110	XXX	00100	0 or 1	F/R-FCH, [Continuous R-PICH/R-CQICH when PDCH_CONTROL_HOLD=1]
00110	XXX	00101	0	F-DCCH
00110	000	Omit	Omit	F-PDCH and R-CQICH
00110	010	Omit	Omit	F-PDCH, R-CQICH, F/R-DCCH
00110	001	Omit	Omit	F-PDCH, R-CQICH, F/R-FCH
00110	101	Omit	Omit	F-PDCH, R-CQICH, F/R-FCH, Continuous R-PICH
01001	XXX	00001	0 or 1	R-PDCH [Continuous R-PICH/R-CQICH when PDCH_CONTROL_HOLD=1]
01001	XXX	01001	1	Continuous R-PICH and R-CQICH
01010	XXX	00010	0 or 1	R-PDCH [Continuous R-PICH/R-CQICH when PDCH_CONTROL_HOLD=1]
01010	XXX	01010	1	Continuous R-PICH and R-CQICH
01011	XXX	00011	Omit	R-PDCH
01011	000	Omit	Omit	F-PDCH, R-CQICH, R-PDCH
01100	XXX	00100	0 or 1	R-PDCH [Continuous R-PICH/R-CQICH when PDCH_CONTROL_HOLD=1]
01100	XXX	01100	1	Continuous R-PICH and R-CQICH
01100	000	Omit	Omit	F-PDCH, R-CQICH, R-PDCH

Current EXT_CH_IND (binary)	CH_IND (binary)	EXT_CH_IND (binary)	PDCH_CONTROL_HOLD (binary)	Physical Resource(s) Released
01100	100	Omit	Omit	F-PDCH, R-CQICH, R-PDCH, Continuous R-PICH
01101	XXX	01011	0	R-DCCH
01101	XXX	00101	0	R-PDCH
01101	XXX	00011	0	R-PDCH, R-DCCH
01101	010	Omit	Omit	F-PDCH, R-CQICH, R-PDCH, R-DCCH
01110	XXX	01011	0	F/R-DCCH
01110	XXX	01100	0 or 1	F/R-FCH [Continuous R-PICH/R-CQICH when PDCH_CONTROL_HOLD=1]
01110	XXX	01101	0	F-DCCH
01110	XXX	00110	0	R-PDCH
01110	XXX	00011	0	R-PDCH, F/R-DCCH
01110	XXX	00100	0 or 1	R-PDCH, F/R-FCH [Continuous R-PICH/R-CQICH when PDCH_CONTROL_HOLD=1]
01110	XXX	00101	0	R-PDCH, F-DCCH
01110	000	Omit	Omit	F-PDCH, R-CQICH, R-PDCH
01110	010	Omit	Omit	F-PDCH, R-CQICH, R-PDCH, F/R-DCCH
01110	001	Omit	Omit	F-PDCH, R-CQICH, R-PDCH, F/R-FCH
01110	101	Omit	Omit	F-PDCH, R-CQICH, R-PDCH, F/R-FCH, Continuous R-PICH
01111	XXX	00100	Omit	F-FCH
10000	XXX	00010	Omit	F-DCCH
10000	XXX	00100	Omit	F-CPCCH
10000	XXX	00010	Omit	F-DCCH and F-CPCCH
10001	XXX	00100	Omit	F-FCH and F-CPCCH
10001	XXX	00010	Omit	F-FCH and F-DCCH
10010	XXX	00110	Omit	F-CPCCH
10010	XXX	00101	Omit	F-DCCH and F-CPCCH
10010	XXX	00100	Omit	F-FCH, R-FCH, F-CPCCH
10010	XXX	00011	Omit	F-DCCH, R-DCCH, F-CPCCH
10010	XXX	00010	Omit	F-FCH, R-FCH, F-DCCH

Current EXT_CH_IND (binary)	CH_IND (binary)	EXT_CH_IND (binary)	PDCH_CONTROL_HOLD (binary)	Physical Resource(s) Released
10010	XXX	00001	Omit	F-DCCH, R-DCCH, R-FCH
10011	XXX	01111	Omit	R-PDCH
10100	XXX	10000	Omit	R-PDCH
10101	XXX	10001	Omit	R-PDCH
10110	XXX	10010	Omit	R-PDCH
10011	XXX	00100	Omit	R-PDCH, F-FCH
10100	XXX	00010	Omit	R-PDCH, F-DCCH
10100	XXX	00100	Omit	R-PDCH, F-CPCCH
10100	XXX	00010	Omit	R-PDCH, F-DCCH and F-CPCCH
10101	XXX	00100	Omit	R-PDCH, F-FCH and F-CPCCH
10101	XXX	00010	Omit	R-PDCH, F-FCH and F-DCCH
10110	XXX	00110	Omit	R-PDCH, F-CPCCH
10110	XXX	00101	Omit	R-PDCH, F-DCCH and F-CPCCH
10110	XXX	00100	Omit	R-PDCH, F-FCH, R-FCH, F-CPCCH
10110	XXX	00011	Omit	R-PDCH, F-DCCH, R-DCCH, F-CPCCH
10110	XXX	00010	Omit	R-PDCH, F-FCH, R-FCH, F-DCCH
10110	XXX	00001	Omit	R-PDCH, F-DCCH, R-DCCH, R-FCH

SWITCHING_PARMS_INCL - R-CQICH switching parameters included indicator.

If the USE_EXT_CH_IND or the GATING_RATE_INCL field is set to '0', the base station shall omit this field; otherwise, the base station shall include this field and set it as follows:

The base station shall set this field to '1' if the parameters for R-CQICH soft and softer switching are included in this message; otherwise, the base station shall set this field to '0'.

NUM_SOFT_SWITCHING_FRAMES_CHM - Number of frames for R-CQICH soft switching while in Control Hold.

If SWITCHING_PARMS_INCL is not included or included and set to '0', then the base station shall omit this field; otherwise, the base station shall include this field and set it as follows:

The base station shall set this field to the duration of the cell switching period, in units of 20 ms, minus one, during which the mobile station, while in Control Hold, is to transmit the cell switch sequence on the R-CQICH when it switches between two pilots which are in different groups.

NUM_SOFTER_SWITCHING_FRAMES_CHM - Number of frames for R-CQICH softer switching while in Control Hold.

If SWITCHING_PARMS_INCL is not included or included and set to '0', then the base station shall omit this field; otherwise, the base station shall include this field and set it as follows:

The base station shall set this field to the duration of the cell switching period, in units of 20 ms, minus one, during which the mobile station, while in Control Hold, is to transmit the cell switch sequence on the R-CQICH when it switches between two pilots which are in the same group.

DIRECT_TO_IDLE_INFO_INCL - Direct to Idle information included.

If USE_EXT_CH_IND is equal to '0' and CH_IND is equal to '111' or the physical channels indicated by the two least significant bits of CH_IND includes all the physical channels (FCH, DCCH, or both) currently being processed by the mobile station, the base station shall set this field as follows:

- If DIRECT TO IDLE record is included, the base station shall set this field to '1'; otherwise base station shall set this field to '0'.

Otherwise the base station shall set this field to '0'.

RELEASE_TYPE - Release type.

If DIRECT_TO_IDLE_INFO_INCL is set to '0', the base station shall omit this field; otherwise, the base station shall include this field and shall set it as follows:

The base station shall set this field as specified in Table 3.7.3.3.2.34-4.

Table 3.7.3.3.2.34-4 Release Type

Value (binary)	Release Type/Usage
000	Release to *Mobile Station Idle State* on the PCH
001	Release to *Mobile Station Idle State* on the Primary BCCH.
010	Release to *Mobile Station Idle State* on the Primary BCCH that supports Transmit Diversity.
011	Release to *System Determination Substate* of the *Mobile Station Initialization State*.
100-111	Reserved.

SID - System identification.

If RELEASE_TYPE field is not included or is included and equals '011', the base station shall omit this field; otherwise, the base station shall include this field and shall set it to the system identification number for the wireless system that the mobile station is being directed to (see 2.6.5.2).

NID - Network identification.

If RELEASE_TYPE field is not included or is included and equals '011', the base station shall omit this field; otherwise, the base station shall include this field and shall set it as follows:

This field serves as a sub-identifier of a system as defined by the owner of the SID.

The base station shall set this field to the network identification number for the network that the mobile station is being directed to (see 2.6.5.2).

FREQ_INCL - Frequency included indicator.

If RELEASE_TYPE field is not included or is included and equals '011', the base station shall omit this field; otherwise, the base station shall include this field and shall set it as follows:

If the CDMA_FREQ and BAND_CLASS fields are included, the base station shall set this field to '1'; otherwise, the base station shall set this field to '0'.

CDMA_FREQ - Frequency assignment.

If the FREQ_INCL field is not included or is included and set to '0', the base station shall omit this field; otherwise, the base station shall set this field to the CDMA Channel number corresponding to the CDMA frequency assignment for the CDMA Channel containing the Paging Channel or Primary Broadcast Control Channel.

BAND_CLASS - Band class.

If the FREQ_INCL field is not included or is included and set to '0', the base station shall omit this field; otherwise, the base station shall set this field to the CDMA band class, as specified in [30], corresponding to the CDMA frequency assignment for the CDMA Channel containing the Paging Channel or Primary Broadcast Control Channel.

PAGE_CH - Paging Channel.

If RELEASE_TYPE field is included and equals '000', the base station shall set this field to the Paging Channel number of the Paging Channel that the mobile station is being directed to; otherwise, the base station shall omit this field.

PRAT - Paging Channel data rate.

If RELEASE_TYPE field is included and equals '000', the base station shall set this field to the PRAT field value shown in Table 3.7.2.3.2.26-1 corresponding to the data rate used by the Paging Channel that the mobile station is being directed to; otherwise, the base station shall omit this field.

SR1_BCCH_CODE_CHAN_NON_TD – Walsh code for the Spreading Rate 1 BCCH in non Transmit Diversity mode.

If RELEASE_TYPE field is not included or is included and is not equal to '001', the base station shall omit this field; otherwise, the base station shall set this field to the Walsh code corresponding to the Spreading Rate 1 BCCH in non Transmit Diversity mode that the mobile station is being directed to.

SR1_CRAT_NON_TD – BCCH code rate in non Transmit Diversity mode for Spreading Rate 1.

If RELEASE_TYPE field is not included or is included and is not equal to '001', the base station shall omit this field; otherwise the base station shall set this field as follows:

The base station shall set this field to '0' if the BCCH Code Rate is 1/4 (see [2]). The base station shall set this field to '1' if the BCCH code rate is 1/2 (see [2]).

SR1_BRAT_NON_TD - BCCH data rate in non Transmit Diversity mode for Spreading Rate 1.

If RELEASE_TYPE field is not included or is included and is not equal to '001', the base station shall omit this field; otherwise, the base station shall set this field as follows:

The base station shall set this field to the BRAT field value shown in Table 3.7.2.3.2.26-2 corresponding to the data rate used by the Primary Broadcast Control Channel that the mobile station is being directed to.

SR1_TD_MODE - Spreading Rate 1 Transmit Diversity Mode.

If RELEASE_TYPE field is included and equals '010', the base station shall set this field to the value shown in Table 3.7.2.3.2.26-3; otherwise, the base station shall omit this field.

SR1_BCCH_CODE_CHAN_TD - Walsh Code for Spreading Rate 1 BCCH in Transmit Diversity mode.

If RELEASE_TYPE field is included and equals '010', the base station shall set this field to the Walsh Code corresponding to the Spreading Rate 1 BCCH in Transmit Diversity mode that the mobile station is being directed to; otherwise, the base station shall omit this field

SR1_CRAT_TD - BCCH code rate in Transmit Diversity mode for Spreading Rate 1.

If RELEASE_TYPE field is not included or is included and is not equal to '010', the base station shall omit this field; otherwise, the base station shall set this field as follows:

The base station shall set this field to '0' if the BCCH Code Rate is ¼ (see [2]). The base station shall set this field to '1' if the BCCH Code Rate is ½ (see [2]).

SR1_BRAT_TD - BCCH date rate in Transmit Diversity mode for Spreading Rate 1.

If RELEASE_TYPE field is included and equals '010', the base station shall set this field to the BRAT field value shown in Table 3.7.2.3.2.26-2 corresponding to the data rate used by the Primary Broadcast Control Channel that the mobile station is being directed to; otherwise, the base station shall omit this field.

SR1_TD_POWER_LEVEL - Spreading Rate 1 TD transmit power level.

If RELEASE_TYPE field is not included or is included and is not equal to '010', the base station shall omit this field; otherwise, the base station shall set this field as follows:

The base station shall set this field to the TD transmit power level relative to that of the Forward Pilot Channel, as specified in Table 3.7.2.3.2.26-4.

NUM_PILOTS_D2I_INCL - Number of Pilots (Direct to Idle) Included Indicator.

If RELEASE_TYPE field is not included or is included and is equal to '011', the base station shall omit this field; otherwise, the base station shall include this field and shall set it as follows:

The base station shall set this field to ‘0’ to indicate any pilot can be used for direct to idle transition; otherwise, the base station shall set this field to ‘1’.

NUM_PILOTS_D2I - Number of Pilots (Direct to Idle).

If NUM_PILOTS_D2I_INCL field is not included or is included and is equal to ‘0’, the base station shall omit this field; otherwise, the base station shall include this field and shall set it as follows:

The base station shall set this field to ‘000’ to indicate any pilot in the active set can be used for direct to idle transition; otherwise, the base station shall set this field to number of pilots included in this DIRECT TO IDLE record.

If NUM_PILOTS_D2I field is included, the base station shall include NUM_PILOTS_D2I occurrences of the following record:

PILOT_PN - Pilot PN sequence offset index.

The base station shall set this field to the pilot PN sequence offset for this pilot in units of 64 PN chips.

RER_MODE_ENABLED - Radio environment reporting mode enabled indicator.

If USE_EXT_CH_IND is equal to ‘0’ and CH_IND is equal to ‘111’, or the physical channels indicated by the two least significant bits of CH_IND includes all the physical channels (FCH, DCCH, or both) currently being processed by the mobile station, the base station shall set this field as follows:

- If the radio environment reporting mode is enabled in this message, the base station shall set this field to ‘1’; otherwise, the base station shall set this field to ‘0’.

Otherwise, the base station shall set this field to ‘0’.

RER_MAX_NUM_MSG_IDX - Maximum number of *Radio Environment Messages* permitted while in radio environment reporting mode index.

If RER_MODE_ENABLED is set to ‘0’, the base station shall omit this field; otherwise, the base station shall include this field and set it as follows:

The base station shall set this field to the maximum number of *Radio Environment Messages* that the mobile station is allowed to transmit while in radio environment reporting mode, expressed as $2^{\text{RER\_MAX\_NUM\_MSG\_IDX}}$ where 0 • RER_MAX_NUM_MSG_IDX • 6. If the mobile station is allowed to transmit an unlimited number of *Radio Environment Message*, then the base station shall set this field to ‘111’.

RER_TIME - Radio environment report timer value.

If RER_MODE_ENABLED is set to ‘0’, the base station shall omit this field; otherwise, the base station shall include this field and set it as follows:

The base station shall set this field to the value of the radio-environment report timer, expressed as 2^{RER_TIME} where 0 • RER_TIME • 6 and in units of RER_TIME_UNIT. If the value of the radio-environment report timer is infinite, then the base station shall set this field to '111'.

RER_TIME_UNIT - Radio environment report timer value units.

If RER_MODE_ENABLED is set to '1' and RER_TIME is not set to '111', the base station shall include this field and shall set it according to Table 3.7.3.3.2.34-5; otherwise, the base station shall omit this field.

Table 3.7.3.3.2.34-5 RER_TIME_UNIT values

RER_TIME_UNIT (binary)	Meaning
00	Seconds
01	Minutes
10	Hours
11	Reserved

MAX_RER_PILOT_LIST_SIZE - Maximum number of pilots to maintain in RER_PILOT_LIST.

If RER_MODE_ENABLED is set to '0', the base station shall omit this field; otherwise, the base station shall include this field and set it as follows:

The base station shall set this field to the maximum number of pilots that the mobile station is to maintain in RER_PILOT_LIST (see [4]). The base station shall set this field to a value in the range 1 to 6 inclusive.

RSC_MODE_SUPPORTED – Reduced slot cycle mode supported indicator.

If USE_EXT_CH_IND is equal to '0' and CH_IND is equal to '111', or the physical channels indicated by the two least significant bits of CH_IND includes all the physical channels (FCH, DCCH, or both) currently being processed by the mobile station, the base station shall set this field as follows:

- If the fields related to reduced slot cycle mode are included in this message, the base station shall set this field to '1'; otherwise, the base station shall set this field to '0'.

Otherwise, the base station shall set this field to '0'.

MAX_RSC_END_TIME_UNIT – Maximum reduced slot cycle mode end time unit.

If RSC_MODE_SUPPORTED is equal to ‘0’, the base station shall omit this field; otherwise, the base station shall set this field according to Table 2.7.3.5-1 to indicate the units of the MAX_RSC_END_TIME_VALUE field.

MAX_RSC_END_TIME_VALUE – Maximum reduced slot cycle mode end time value.

If RSC_MODE_SUPPORTED is equal to ‘0’, the base station shall omit this field; otherwise, the base station shall include this field and set it as follows:

The base station shall set this field to the maximum system time, in units of time specified by MAX_RSC_END_TIME_UNIT (modulo 16), at which the mobile station is to exit the reduced slot cycle mode.

REQ_RSCI_INCL – REQ_RSCI included indicator.

If RSC_MODE_SUPPORTED is equal to ‘1’, the base station shall include this field and set it as specified below; otherwise, the base station shall omit this field.

If the base station is requesting the mobile station to operate in the reduced slot cycle mode following release of the traffic channel, the base station shall set this field to ‘1’; otherwise, the base station shall set this field to ‘0’.

REQ_RSCI – Requested reduced slot cycle index.

If REQ_RSCI_INCL is included and equal to ‘1’, the base station shall set this field as specified in Table 2.7.1.3.2.1-8 to the reduced slot cycle index value that it is requesting the mobile station to operate with; otherwise, the base station shall omit this field.

IGNORE_QPCH – Ignore QPCH indicators.

If RSC_MODE_SUPPORTED is equal to ‘1’, the base station shall include this field and set it as specified below; otherwise, the base station shall omit this field.

The base station shall set this field to ‘1’ to indicate to the mobile station that it is not to check its assigned paging indicators on the QPCH while operating in the reduced slot cycle mode if the reduced slot cycle index is -3 or -4; otherwise, the base station shall set this field to ‘0’.

TKZ_MODE_ENABLED - Tracking zone mode enabled indicator.

If USE_EXT_CH_IND is equal to ‘0’ and CH_IND is equal to ‘111’, or the physical channels indicated by the two least significant bits of CH_IND includes all the physical channels (FCH, DCCH, or both) currently being processed by the mobile station, the base station shall set this field as follows:

- If the tracking zone mode is enabled in this message, the base station shall set this field to ‘1’; otherwise, the base station shall set this field to ‘0’.

Otherwise, the base station shall set this field to ‘0’.

TKZ_ID - Tracking zone identifier.

If TKZ_MODE_ENABLED is set to ‘0’, the base station shall omit this field; otherwise, the base station shall set this field to its tracking zone identifier.

TKZ_MAX_NUM_MSG_IDX - Maximum number of *Radio Environment Messages* permitted while in tracking zone mode index.

If TKZ_MODE_ENABLED is set to ‘0’, the base station shall omit this field; otherwise, the base station shall include this field and set it as follows:

The base station shall set this field to the maximum number of *Radio Environment Messages* that the mobile station is allowed to transmit while in tracking zone mode, expressed as $2^{TKZ\_MAX\_NUM\_MSG\_IDX}$ where 0 • TKZ_MAX_NUM_MSG_IDX • 6. If the mobile station is allowed to transmit an unlimited number of *Radio Environment Messages*, then the base station shall set this field to ‘111’.

TKZ_UPDATE_PRD - Tracking zone update period.

If TKZ_MODE_ENABLED is set to ‘0’, the base station shall omit this field; otherwise, the base station shall include this field and set it as follows:

The base station shall set this field such that the desired tracking zone update timer value is $2^{TKZ\_UPDATE\_PRD+6}$ seconds. If the value of the timer is infinite, then the base station shall set this field to ‘1111’.

TKZ_LIST_LEN - Tracking zone list length.

If TKZ_MODE_ENABLED is set to ‘0’, the base station shall omit this field; otherwise, the base station shall include this field and set it as follows:

The base station shall set this field to the length of the tracking zone list minus one.

TKZ_TIMER - Tracking zone timer.

If TKZ_MODE_ENABLED is set to ‘0’, the base station shall omit this field; otherwise, the base station shall include this field and set it as follows:

The base station shall set this field to the value of the tracking zone timer (in units of seconds) minus one.

TBR_RAND_SUPPR_ENABLE - Timer Based Registration Randomization Suppression enable indicator.

The base station shall set this field to ‘1’, if the mobile station is allowed to suppress timer-based registration randomization in order to eliminate unnecessary timer-based registrations (see 2.6.5.1.3.1); otherwise, the base station shall set this field to ‘0’.

TBR_RAND_WINDOW – Timer-based registration randomization window.

The base station shall set this field to the value shown in Table 2.6.5.1.3-1 corresponding to the randomization for timer-based registration (see 2.6.5.1.3).

BCMC_INFO_INCL - BCMC information Included Indicator

If RELEASE_TYPE field is not included or is included and is equal to '011', the base station shall omit this field; otherwise, the base station shall include this field and shall set it as follows:

The base station shall set this field to '1' if BCMC information is included in this message; otherwise, the base station shall set this field to '0'.

The BCMC information included in this message is applicable to all the pilots indicated by the DIRECT TO IDLE record in this message.

NUM_FSCH - Number of Forward Supplemental Channels.

If BCMC_INFO_INCL field is not included or is included and is equal to '0', the base station shall omit this field; otherwise, the base station shall include this field and shall set it as follows:

The base station shall set this field to the number of Forward Supplemental Channels for which information is included in this message minus one.

NUM_BCMC_PROGRAMS - Number of BCMC Programs

If BCMC_INFO_INCL field is not included or is included and is equal to '0', the base station shall omit this field; otherwise, the base station shall include this field and shall set it as follows:

The base station shall set this field to the number of BCMC programs for which information is included in this message minus one.

If NUM_FSCH field is included, the base station shall include NUM_FSCH plus one occurrences of the following variable length record:

FSCH_RECORD_LEN - Forward Supplemental Channel record length.

The base station shall set this field to the number of octets included in this Forward Supplemental Channel record including this field.

FSCH_CODE_CHAN - Code channel index of the Forward Supplemental Channel.

The base station shall set this field to the code channel index of this Forward Supplemental Channel as specified in [2].

FSCH_MUX_OPTION - Multiplex Option of the Forward Supplemental Channel

The base station shall set this field to the multiplex option of this Forward Supplemental Channel as specified in [3].

FSCH_RC - Radio configuration of the Forward Supplemental Channel.

The base station shall set this field to the radio configuration of this Forward Supplemental Channel as specified in [2].

FSCH_CODING - Coding type of the Forward Supplemental Channel.

The base station shall set this field to '1' if Convolutional Coding will be used when the number of channel bits per frame is less than 360 and Turbo Coding when the number of channel bits per frame is equal to or greater than 360. The base station shall set this field to '0' if Convolution Coding will be used for all block sizes.

FSCH_OUTERCODE_INCL - Forward Supplemental Channel Outer Code included indicator.

The base station shall set this field to '1' if the Forward Supplemental Channel outer code information is included in this message; otherwise, the base station shall set this field to '0'.

FSCH_OUTERCODE_RATE - Outer Code Rate of the Forward Supplemental Channel.

If the FSCH_OUTERCODE_INCL field is set to '0', the base station shall omit this field; otherwise, the base station shall include this field and set it as follows:

The base station shall set this field to the outer code rate of the Forward Supplemental Channel as specified in Table 3.7.2.3.2.38-3.

FSCH_OUTERCODE_OFFSET - Outer Coding Buffer Offset of the Forward Supplemental Channel.

If the FSCH_OUTERCODE_INCL field is set to '0', the base station shall omit this field; otherwise, the base station shall include this field and set it as follows:

The base station shall set this field to the outer coding buffer offset of the Forward Supplemental Channel in units of 20ms as specified in [2].

FSCH_RATE - Data Rate of the Forward Supplemental Channel.

The base station shall set this field to the data rate of this Forward Supplemental Channel as specified in [2].

FSCH_FRAME_40_USED - Forward Supplemental Channel 40ms frame used indicator.

The base station shall set this field to '1' if 40ms frame is used on this Forward Supplemental Channel; otherwise, the base station shall set this field to '0'.

The base station shall not set both FSCH_FRAME_40_USED and FSCH_FRAME_80_USED fields to '1'.

FSCH_FRAME_80_USED - Forward Supplemental Channel 80ms frame used indicator.

The base station shall set this field to '1' if 80ms frame is used on this Forward Supplemental Channel; otherwise, the base station shall set this field to '0'.

The base station shall not set both FSCH_FRAME_40_USED and FSCH_FRAME_80_USED fields to '1'.

FSCH_RECORD_RESERVED - Forward Supplemental Channel record Reserved bits.

The base station shall add reserved bits as needed in order to make the length of this Forward Supplemental Channel record equal to an integer number of octets. The base station shall set these bits to '0'.

If NUM_BCMC_PROGRAMS field is included, the base station shall include NUM_BCMC_PROGRAMS plus one occurrences of the following variable length record:

BCMC_PROGRAM_ID_LEN - Length of BCMC_PROGRAM_ID field

The base station shall set this field to one less than the length in bits of the BCMC_PROGRAM_ID of this program.

BCMC_PROGRAM_ID - BCMC program Identifier

The length of this field shall be one more than the value of BCMC_PROGRAM_ID_LEN bits.

The base station shall set this field to the BCMC program identifier of this program.

BCMC_FLOW_DISCRIMINATOR_LEN - Length of BCMC_FLOW_DISCRIMINATOR field

The base station shall set this field to the length in bits of the BCMC_FLOW_DISCRIMINATOR of this program.

NUM_FLOW_DISCRIMINATOR - Number of BCMC flow discriminators.

The length of this field shall be determined by the value of the BCMC_FLOW_DISCRIMINATOR_LEN as follows: if BCMC_FLOW_DISCRIMINATOR_LEN is set to '000', this field is omitted; otherwise, the length of this field shall be BCMC_FLOW_DISCRIMINATOR_LEN bits.

The base station shall set this field to the number of flow discriminators included for this program minus one.

If NUM_FLOW_DISCRIMINATOR field is included, the base station shall include NUM_FLOW_DISCRIMINATOR+1 occurrences of the following variable length record; otherwise, the base station shall include 1 occurrence of the following variable length record:

BCMC_FLOW_DISCRIMINATOR - BCMC flow discriminator

The length of this field shall be determined by the value of the BCMC_FLOW_DISCRIMINATOR_LEN as follows: if BCMC_FLOW_DISCRIMINATOR_LEN is set to '000', this field is omitted; otherwise, the length of this field shall be BCMC_FLOW_DISCRIMINATOR_LEN bits.

The base station shall set this field to the BCMC flow discriminator of this flow.

NUM_LPM_ENTRIES - Number of Logical-to-Physical Mapping Entries

The base station shall set this field to one less than the number of logical to physical mapping included for this BCMC flow.

The base station shall include NUM_LPM_ENTRIES plus one occurrences of the following variable-length record:

FSCH_ID - Forward Supplemental Channel Identifier

The base station shall set this field to the identifier corresponding to the Forward Supplemental Channel on which the above BCMC flow is being transmitted.

The F-SCH included first in this message is given the FSCH_ID of '0000000', the second one listed is given the FSCH_ID of '0000001', and so on.

BSR_ID - BCMC Service Reference Identifier

The base station shall set this field to the BCMC Service Reference identifier corresponding to this BCMC flow on this Forward Supplemental Channel.

The base station shall not set this field to a value of 0.

3.7.3.3.2.35 Extended Release Mini Message

MSG_TAG: ERMM

Field	Length (bits)
USE_TIME	1
ACTION_TIME	0 or 6
CH_IND	3
GATING_RATE_INCL	1
PILOT_GATING_RATE	0 or 2
USE_EXT_CH_IND	1
EXT_CH_IND	0 or 5
PDCH_CONTROL_HOLD	0 or 1

USE_TIME - Use action time indicator.

This field indicates whether an ACTION_TIME is specified in this message.

If an ACTION_TIME is specified in this message, the base station shall set this field to '1'; otherwise, the base station shall set this field to '0'.

ACTION_TIME - Action time.

If the USE_TIME field is set to '1', the base station shall set this field to the System Time minus $FRAME\_OFFSET_S \times 1.25$ ms, in units of 80 ms (modulo 64), at which the message is to take effect. If the USE_TIME field is set to '0', the base station shall omit this field.

CH_IND - Channel Indicator.

The base station shall set this field as shown in Table 3.7.3.3.2.34-1, to release physical resources.

GATING_RATE_INCL - Reverse pilot gating rate included flag.

The base station shall set this field to '1' if the PILOT_GATING_RATE field is included, otherwise it shall set this field to '0'.

PILOT_GATING_RATE - Actual Reverse Pilot gating Rate.

If the GATING_RATE_INCL field is set to '1', then the base station shall set this field to the PILOT_GATING_RATE field shown in Table 3.7.3.3.2.34-2 corresponding to the actual gating rate on the Reverse Pilot Channel; otherwise, the base station shall omit this field.

USE_EXT_CH_IND - Use EXT_CH_IND to set channel configuration

The base station shall set this field to ‘1’ if the EXT_CH_IND is included in this message and is used to set the channel configuration; otherwise, the base station shall set this field to ‘0’.

EXT_CH_IND - Extended Channel Indicator.

If the USE_EXT_CH_IND field is set to ‘0’, the base station shall omit this field; otherwise, the base station shall include this field and set it as follows:

The base station shall set this field to the desired channel configuration shown in Table 2.7.1.3.2.4-11.

PDCH_CONTROL_HOLD - Packet Data Channel Control Hold mode indication.

If the USE_EXT_CH_IND field is set to ‘0’, the base station shall omit this field; otherwise, the base station shall include this field and set it as follows:

The base station shall set this field to ‘1’ to instruct the mobile station to transition to the Packet Data Channel Control Hold Mode.

If EXT_CH_IND signals the allocation of F-FCH, this field shall be set to ‘0’.

Table 3.7.3.3.2.34-3 shows the valid combinations of CH_IND, EXT_CH_IND, and PDCH_CONTROL_HOLD.

3.7.3.3.2.36 Universal Handoff Direction Message

MSG_TAG: UHDM

Field	Length (bits)
USE_TIME	1
ACTION_TIME	0 or 6
HDM_SEQ	2
PARMS_INCL	1
P_REV	0 or 8
SERV_NEG_TYPE	0 or 1
SEARCH_INCLUDED	1
SRCH_WIN_A	0 or 4
SRCH_WIN_N	0 or 4
SRCH_WIN_R	0 or 4
T_ADD	0 or 6
T_DROP	0 or 6
T_COMP	0 or 4
T_TDROP	0 or 4
SOFT_SLOPE	0 or 6
ADD_INTERCEPT	0 or 6
DROP_INTERCEPT	0 or 6
EXTRA_PARMS	1
PACKET_ZONE_ID	0 or 8
FRAME_OFFSET	0 or 4
PRIVATE_LCM	0 or 1
RESET_L2	0 or 1
RESET_FPC	0 or 1

(continues on next page)

Field	Length (bits)
ENCRYPT_MODE	0 or 2
NOM_PWR_EXT	0 or 1
NOM_PWR	0 or 4
RLGAIN_TRAFFIC_PILOT	0 or 6
DEFAULT_RLAG	0 or 1
NUM_PREAMBLE	0 or 3
BAND_CLASS	0 or 5
CDMA_FREQ	0 or 11
RETURN_IF_HANDOFF_FAIL	0 or 1
COMPLETE_SEARCH	0 or 1
PERIODIC_SEARCH	0 or 1
SCR_INCLUDED	0 or 1
SERV_CON_SEQ	0 or 3
RECORD_TYPE	0 or 8
RECORD_LEN	0 or 8
Type-specific fields	0 or 8 × RECORD_LEN
NNSCR_INCLUDED	0 or 1
RECORD_TYPE	0 or 8
RECORD_LEN	0 or 8
Type-specific fields	0 or 8 × RECORD_LEN

(continues on next page)

1

Field	Length (bits)
USE_PWR_CNTL_STEP	1
PWR_CNTL_STEP	0 or 3
CLEAR_RETRY_DELAY	1
SCH_INCL	1
NUM_FOR_ASSIGN	0 or 2

The base station shall include NUM_FOR_ASSIGN occurrences of the following fields

{ (NUM_FOR_ASSIGN)

FOR_SCH_ID	1
FOR_SCH_DURATION	4
FOR_SCH_START_TIME_INCL	1
FOR_SCH_START_TIME	0 or 5
SCCL_INDEX	4
} (NUM_FOR_ASSIGN)	
NUM_REV_ASSIGN	0 or 2

The base station shall include NUM_REV_ASSIGN occurrences of the following fields

{ (NUM_REV_ASSIGN)

REV_SCH_ID	1
REV_SCH_DURATION	4
REV_SCH_START_TIME_INCL	1
REV_SCH_START_TIME	0 or 5
REV_SCH_NUM_BITS_IDX	4

} (NUM_REV_ASSIGN)

FPC_SUBCHAN_GAIN	5
USE_PC_TIME	1
PC_ACTION_TIME	0 or 6
CH_IND	3
ACTIVE_SET_REC_LEN	8
ACTIVE_SET_REC_FIELDS	8 × ACTIVE_SET_REC_LEN
REV_FCH_GATING_MODE	0 or 1
REV_PWR_CNTL_DELAY_INCL	0 or 1

Field	Length (bits)
REV_PWR_CNTL_DELAY	0 or 2
D_SIG_ENCRYPT_MODE	0 or 3
ENC_KEY_SIZE	0 or 3
3XFL_1XRL_INCL	1
1XRL_FREQ_OFFSET	0 or 2
SYNC_ID_INCL	0 or 1
SYNC_ID_LEN	0 or 4
SYNC_ID	0 or (8 × SYNC_ID_LEN)
CC_INFO_INCL	0 or 1
NUM_CALLS_ASSIGN	0 or 8

NUM_CALLS_ASSIGN occurrences of the following variable length record:

{ (NUM_CALLS_ASSIGN)

CON_REF	8
RESPONSE_IND	1
TAG	0 or 4
BYPASS_ALERT_ANSWER	0 or 1

} (NUM_CALLS_ASSIGN)

CS_SUPPORTED	1
CHM_SUPPORTED	1
CDMA_OFF_TIME_REP_SUP_IND	1
CDMA_OFF_TIME_REP_THRESHOLD_UNIT	0 or 1
CDMA_OFF_TIME_REP_THRESHOLD	0 or 3
RELEASE_TO_IDLE_IND	1

(continues on next page)

Field	Length (bits)
MSG_INTEGRITY_SUP	1
GEN_2G_KEY	1
REGISTER_IN_IDLE	1
PLCM_TYPE_INCL	1
PLCM_TYPE	0 or 4
PLCM_39	0 or 39
T_TDROP_RANGE_INCL	0 or 1
T_TDROP_RANGE	0 or 4
FOR_PDCH_SUPPORTED	1
PDCH_CHM_SUPPORTED	0 or 1
PILOT_INFO_REQ_SUPPORTED	1
ENC_SUPPORTED	1
SIG_ENCRYPT_SUP	0 or 8
UI_ENCRYPT_SUP	0 or 8
USE_SYNC_ID	1
SID_INCL	1
SID	0 or 15
NID_INCL	1
NID	0 or 16
SDB_SUPPORTED	1
MOB_QOS	0 or 1
MS_INIT_POS_LOC_SUP_IND	1
REV_PDCH_SUPPORTED	0 or 1
PZ_HYST_ENABLED	0 or 1
PZ_HYST_INFO_INCL	0 or 1
PZ_HYST_LIST_LEN	0 or 4
PZ_HYST_ACT_TIMER	0 or 8
PZ_HYST_TIMER_MUL	0 or 3
PZ_HYST_TIMER_EXP	0 or 5
BCMC_ON_TRAFFIC_SUP	1
AUTO_REQ_TRAF_ALLOWED_IND	0 or 1
SCH_BCMC_IND	0 or 1
ADD_PLCM_FOR_SCH_INCL	0 or 1

Field	Length (bits)
ADD_PLCM_FOR_SCH_TYPE	0 or 1
ADD_PLCM_FOR_SCH_35	0 or 35

NUM_FOR_ASSIGN occurrence of the following record if SCH_BCMC_IND is included and is set to '1':

{ (NUM_FOR_ASSIGN)

USE_ADD_PLCM_FOR_SCH	1
FSCH_OUTERCODE_INCL	1
FSCH_OUTERCODE_RATE	0 or 3
FSCH_OUTERCODE_OFFSET	0 or 6

} (NUM_FOR_ASSIGN)

MAX_ADD_SERV_INSTANCE	0 or 3
USE_CH_CFG_RRM	1
TX_PWR_LIMIT_INCL	1
TX_PWR_LIMIT_DEFAULT	0 or 1
TX_PWR_LIMIT	0 or 6

If CH_IND = '101', the ACTIVE_SET_REC_FIELDS shall be:

Field	**Length (bits)**
NUM_FOR_SCH	0 or 5
NUM_FOR_SCH occurrences of the following three fields: *{ (NUM_FOR_SCH)*	
FOR_SCH_ID	1
SCCL_INDEX	4
FOR_SCH_NUM_BITS_IDX	4
} (NUM_FOR_SCH)	
NUM_REV_SCH	0 or 5
NUM_REV_SCH occurrences of the following three fields: *{ (NUM_REV_SCH)*	
REV_SCH_ID	1
REV_WALSH_ID	1
REV_SCH_NUM_BITS_IDX	4
} (NUM_REV_SCH)	
NUM_PILOTS	3
SRCH_OFFSET_INCL	1
NUM_PILOTS occurrences of the following record: *{ (NUM_PILOTS)*	
PILOT_PN	9
SRCH_OFFSET	0 or 3
ADD_PILOT_REC_INCL	1
PILOT_REC_TYPE	0 or 3
RECORD_LEN	0 or 3
Type-specific fields	8 × RECORD_LEN
PWR_COMB_IND	1
CODE_CHAN_FCH	11
QOF_MASK_ID_FCH	2

(continues on next page)

Field	Length (bits)
NUM_SCH	0 or 5

NUM_SCH occurrences of the following record

{ (NUM_SCH)

FOR_SCH_ID	1
SCCL_INDEX	4
PILOT_INCL	1
CODE_CHAN_SCH	0 or 11
QOF_MASK_ID_SCH	0 or 2
} (NUM_SCH) *} ((NUM_PILOTS)*	
3X_FCH_INFO_INCL	1

If 3X_FCH_INFO_INCL is set to '1', NUM_PILOTS occurrences of the following record:

{ (NUM_PILOTS)

3X_FCH_LOW_INCL	1
QOF_MASK_ID_FCH_LOW	0 or 2
CODE_CHAN_FCH_LOW	0 or 11
3X_FCH_HIGH_INCL	1
QOF_MASK_ID_FCH_HIGH	0 or 2
CODE_CHAN_FCH_HIGH	0 or 11
3X_SCH_INFO_INCL	0 or 1

If 3X_SCH_INFO_INCL is included and set to '1', NUM_SCH occurrences of the following record:

{ (NUM_SCH)

FOR_SCH_ID	1
3X_SCH_LOW_INCL	1
QOF_MASK_ID_SCH_LOW	0 or 2
CODE_CHAN_SCH_LOW	0 or 11
3X_SCH_HIGH_INCL	1
QOF_MASK_ID_SCH_HIGH	0 or 2

Field	Length (bits)
CODE_CHAN_SCH_HIGH	0 or 11

} (NUM_SCH)

} (NUM_PILOTS)

CCSH_INCLUDED	1
USE_CCSH_ENCODER_TIME	0 or 1
CCSH_ENCODER_ACTION_TIME	0 or 6

{(NUM_PILOTS)

{(NUM_SCH)

CCSH_ENCODER_TYPE	0 or 1

}(NUM_SCH)

}(NUM_PILOTS)

RESERVED	0 - 7 (as needed)

If CH_IND = ‘010’ or ‘110’, the ACTIVE_SET_REC_FIELDS shall be:

Field	**Length (bits)**
NUM_FOR_SCH	0 or 5

NUM_FOR_SCH occurrences of the following three fields:

{ (NUM_FOR_SCH)

FOR_SCH_ID	1
SCCL_INDEX	4
FOR_SCH_NUM_BITS_IDX	4

} (NUM_FOR_SCH)

NUM_REV_SCH	0 or 5

NUM_REV_SCH occurrences of the following three fields:

{ (NUM_REV_SCH)

REV_SCH_ID	1
REV_WALSH_ID	1
REV_SCH_NUM_BITS_IDX	4

} (NUM_REV_SCH)

NUM_PILOTS	3
SRCH_OFFSET_INCL	1

NUM_PILOTS occurrences of the following record:

{ (NUM_PILOTS)

PILOT_PN	9
SRCH_OFFSET	0 or 3
ADD_PILOT_REC_INCL	1
PILOT_REC_TYPE	0 or 3
RECORD_LEN	0 or 3
Type-specific fields	8 × RECORD_LEN
PWR_COMB_IND	1
CODE_CHAN_DCCH	11
QOF_MASK_ID_DCCH	2

(continues on next page)

1

Field	Length (bits)
NUM_SCH	0 or 5

NUM_SCH occurrences of the following five fields:

{ (NUM_SCH)

FOR_SCH_ID	1
SCCL_INDEX	4
PILOT_INCL	1
CODE_CHAN_SCH	0 or 11
QOF_MASK_ID_SCH	0 or 2

} (NUM_SCH)

} (NUM_PILOTS)

3X_DCCH_INFO_INCL	1

If 3X_DCCH_INFO_INCL is set to '1', NUM_PILOTS occurrences of the following record:

{ (NUM_PILOTS)

3X_DCCH_LOW_INCL	1
QOF_MASK_ID_DCCH_LOW	0 or 2
CODE_CHAN_DCCH_LOW	0 or 11
3X_DCCH_HIGH_INCL	1
QOF_MASK_ID_DCCH_HIGH	0 or 2
CODE_CHAN_DCCH_HIGH	0 or 11
3X_SCH_INFO_INCL	0 or 1

If 3X_SCH_INFO_INCL is included and set to '1', NUM_SCH occurrences of the following record:

{ (NUM_SCH)

FOR_SCH_ID	1
3X_SCH_LOW_INCL	1
QOF_MASK_ID_SCH_LOW	0 or 2
CODE_CHAN_SCH_LOW	0 or 11
3X_SCH_HIGH_INCL	1
QOF_MASK_ID_SCH_HIGH	0 or 2

Field	Length (bits)
CODE_CHAN_SCH_HIGH	0 or 11

} (NUM_SCH)

} (NUM_PILOTS)

CCSH_INCLUDED	1
USE_CCSH_ENCODER_TIME	0 or 1
CCSH_ENCODER_ACTION_TIME	0 or 6

{(NUM_PILOTS)

{(NUM_SCH)

CCSH_ENCODER_TYPE	0 or 1

}(NUM_SCH)

}(NUM_PILOTS)

FUNDICATED_BCMC_IND	1

NUM_PILOTS occurrence of the following record:

*{ (*NUM_PILOTS*)*

FOR_CPCCH_WALSH	7
FOR_CPCSCH	5
*} (*NUM_PILOTS*)*	
RESERVED	0 - 7 (as needed)

If CH_IND = '111', the ACTIVE_SET_REC_FIELDS shall be:

Field	**Length (bits)**
NUM_FOR_SCH	0 or 5

NUM_FOR_SCH occurrences of the following three fields:

{ (NUM_FOR_SCH)

FOR_SCH_ID	1
SCCL_INDEX	4
FOR_SCH_NUM_BITS_IDX	4

} (NUM_FOR_SCH)

NUM_REV_SCH	0 or 5

NUM_REV_SCH occurrences of the following three fields:

{ (NUM_REV_SCH)

REV_SCH_ID	1
REV_WALSH_ID	1
REV_SCH_NUM_BITS_IDX	4

} (NUM_REV_SCH)

NUM_PILOTS	3
SRCH_OFFSET_INCL	1

NUM_PILOTS occurrences of the following record:

{ (NUM_PILOTS)

PILOT_PN	9
SRCH_OFFSET	0 or 3
ADD_PILOT_REC_INCL	1
PILOT_REC_TYPE	0 or 3
RECORD_LEN	0 or 3
Type-specific fields	8 × RECORD_LEN
PWR_COMB_IND	1
CODE_CHAN_FCH	11
QOF_MASK_ID_FCH	2
CODE_CHAN_DCCH	11
QOF_MASK_ID_DCCH	2

(continues on next page)

Field	Length (bits)
NUM_SCH	0 or 5

NUM_SCH occurrences of the following five field record:

{ (NUM_SCH)

FOR_SCH_ID	1
SCCL_INDEX	4
PILOT_INCL	1
CODE_CHAN_SCH	0 or 11
QOF_MASK_ID_SCH	0 or 2

} (NUM_SCH)

} (NUM_PILOTS)

3X_FCH_INFO_INCL	1
3X_DCCH_INFO_INCL	1

If 3X_FCH_INFO_INCL or 3X_DCCH_INFO_INCL is set to ‘1’, NUM_PILOTS occurrences of the following record:

{ (NUM_PILOTS)

3X_FCH_LOW_INCL	0 or 1
QOF_MASK_ID_FCH_LOW	0 or 2
CODE_CHAN_FCH_LOW	0 or 11
3X_FCH_HIGH_INCL	0 or 1
QOF_MASK_ID_FCH_HIGH	0 or 2
CODE_CHAN_FCH_HIGH	0 or 11
3X_DCCH_LOW_INCL	0 or 1
QOF_MASK_ID_DCCH_LOW	0 or 2
CODE_CHAN_DCCH_LOW	0 or 11
3X_DCCH_HIGH_INCL	0 or 1
QOF_MASK_ID_DCCH_HIGH	0 or 2
CODE_CHAN_DCCH_HIGH	0 or 11
3X_SCH_INFO_INCL	0 or 1

Field	Length (bits)
If 3X_SCH_INFO_INCL is included and set to '1', NUM_SCH occurrences of the following record:	
{ (NUM_SCH)	
FOR_SCH_ID	1
3X_SCH_LOW_INCL	1
QOF_MASK_ID_SCH_LOW	0 or 2
CODE_CHAN_SCH_LOW	0 or 11
3X_SCH_HIGH_INCL	1
QOF_MASK_ID_SCH_HIGH	0 or 2
CODE_CHAN_SCH_HIGH	0 or 11
} (NUM_SCH)	
} (NUM_PILOTS)	
CCSH_INCLUDED	1
USE_CCSH_ENCODER_TIME	0 or 1
CCSH_ENCODER_ACTION_TIME	0 or 6
{(NUM_PILOTS)	
{(NUM_SCH)	
CCSH_ENCODER_TYPE	0 or 1
}(NUM_SCH)	
}(NUM_PILOTS)	
FUNDICATED_BCMC_IND	1
REV_FCH_ASSIGNED	0 or 1

Field	Length (bits)
ADD_PLCM_FOR_FCH_INCL	0 or 1
ADD_PLCM_FOR_FCH_TYPE	0 or 1
ADD_PLCM_FOR_FCH_39	0 or 39
FOR_CPCCH_INFO_INCL	0 or 1

NUM_PILOTS occurrence of the following record if FOR_CPCCH_INFO_INCL is set to ‘1’:

*{ (*NUM_PILOTS*)*	
FOR_CPCCH_WALSH	7
FOR_CPCSCH	5

*} (*NUM_PILOTS*)*

RESERVED	0 - 7 (as needed)

If CH_IND = '000', the ACTIVE_SET_REC_FIELDS shall be:

Field	**Length (bits)**
EXT_CH_IND	5
RESERVED	3
EXT_ACTIVE_SET_REC_FIELDS	8 × (ACTIVE_SET_REC_LEN-1)

The EXT_ACTIVE_SET_REC_FIELDS shall be:

PDCH_CONTROL_HOLD	1
FULL_CI_FEEDBACK_IND	1
FOR_CPCCH_RATE	0 or 2
FOR_CPCCH_UPDATE_RATE	0 or 2
REV_CQICH_FRAME_OFFSET	4
REV_CQICH_REPS	2
REV_ACKCH_REPS	2
NUM_FOR_SCH	0 or 5
NUM_FOR_SCH occurrences of the following three fields: *{ (NUM_FOR_SCH)*	
FOR_SCH_ID	1
SCCL_INDEX	4
FOR_SCH_NUM_BITS_IDX	4
} (NUM_FOR_SCH)	
NUM_REV_SCH	0 or 5
NUM_REV_SCH occurrences of the following three fields: *{ (NUM_REV_SCH)*	
REV_SCH_ID	1
REV_WALSH_ID	1
REV_SCH_NUM_BITS_IDX	4
} (NUM_REV_SCH)	

(continues on next page)

1

Field	Length (bits)
NUM_PILOTS	3
SRCH_OFFSET_INCL	1
PDCH_GROUP_IND_INCL	1
FOR_PDCH_PARMS_INCL	1
FOR_PDCH_RLGAIN_INCL	0 or 1
RLGAIN_ACKCH_PILOT	0 or 6
RLGAIN_CQICH_PILOT	0 or 6
NUM_SOFT_SWITCHING_FRAMES	0 or 4
NUM_SOFTER_SWITCHING_FRAMES	0 or 4
NUM_SOFT_SWITCHING_SLOTS	0 or 2
NUM_SOFTER_SWITCHING_SLOTS	0 or 2
CHM_SWITCHING_PARMS_INCL	0 or 1
NUM_SOFT_SWITCHING_FRAMES_CHM	0 or 4
NUM_SOFTER_SWITCHING_FRAMES_CHM	0 or 4
NUM_SOFT_SWITCHING_SLOTS_CHM	0 or 2
NUM_SOFTER_SWITCHING_SLOTS_CHM	0 or 2
PDCH_SOFT_SWITCHING_DELAY	0 or 8
PDCH_SOFTER_SWITCHING_DELAY	0 or 8
FOR_PDCH_COMMON_PARMS	0 or 1
WALSH_TABLE_ID	0 or 3
NUM_PDCCH	0 or 3
NUM_PDCCH+1 occurrences of the following record: *{ (NUM_PDCCH+1)*	
FOR_PDCCH_WALSH	0 or 6
} (NUM_PDCCH+1)	
TX_DISABLED_TIMER_INCL	1
TX_DISABLED_TIMER	0 or 8
FOR_GCH_ASSIGNED	0 or 1
FOR_RCCH_ASSIGNED	0 or 1
FOR_RCCH_DRC_MODE	0 or 1
FOR_RCCH_REPETITION	0 or 2

Field	**Length (bits)**
FOR_RCCH_UPDATE_RATE	0 or 2
FOR_ACKCH_ASSIGNED	0 or 1
FOR_ACKCH_MODE	0 or 2
FOR_ACKCH_COMB_SEL	0 or 1
REV_PDCH_PARMS_INCL	0 or 1
REV_PDCH_RLGAIN_INCL	0 or 1
RLGAIN_SPICH_PILOT	0 or 6
RLGAIN_REQCH_PILOT	0 or 6
RLGAIN_PDCCH_PILOT	0 or 6
REV_PDCH_PARMS_1_INCL	0 or 1
REV_PDCH_TABLE_SEL	0 or 1
REV_PDCH_MAX_AUTO_TPR	0 or 8
NUM_PILOTS occurrences of the following record: *{ (NUM_PILOTS)*	
PILOT_PN	9
SRCH_OFFSET	0 or 3
ADD_PILOT_REC_INCL	1
PILOT_REC_TYPE	0 or 3
RECORD_LEN	0 or 3
Type-specific fields	8 × RECORD_LEN

(continues on next page)

1

Field	Length (bits)
FOR_PDCH_INCL	1
WALSH_TABLE_ID	0 or 3
NUM_PDCCH	0 or 3
NUM_PDCCH+1 occurrences of the following record: *{ (NUM_PDCCH+1)*	
FOR_PDCCH_WALSH	0 or 6
} (NUM_PDCCH+1)	
MAC_ID	0 or 8
REV_CQICH_COVER	0 or 3
FOR_CPCCH_WALSH	0 or 7
FOR_CPCSCH	0 or 7
PWR_COMB_IND	1
PDCH_GROUP_IND	0 or 1
CODE_CHAN_FCH	0 or 11
QOF_MASK_ID_FCH	0 or 2
CODE_CHAN_DCCH	0 or 11
QOF_MASK_ID_DCCH	0 or 2
FOR_ACKCH_WALSH_INDEX	0 or 6
FOR_ACKSCH_INDEX	0 or 8
FOR_RCCH_INCL	0 or 1
FOR_RCCH_WALSH_INDEX	0 or 7
FOR_RCSCH_INDEX	0 or 7
NUM_FOR_GCH	0 or 2
NUM_FOR_GCH occurrences of the following record: *{ (NUM_FOR_GCH)*	
FOR_GCH_WALSH_INDEX	0 or 8
} (NUM_FOR_GCH)	

(continues on next page)

Field	Length (bits)
NUM_SCH	0 or 5
NUM_SCH occurrences of the following five field record: *{ (NUM_SCH)*	
FOR_SCH_ID	1
SCCL_INDEX	4
PILOT_INCL	1
CODE_CHAN_SCH	0 or 11
QOF_MASK_ID_SCH	0 or 2
} (NUM_SCH) *} (NUM_PILOTS)*	
CCSH_INCLUDED	1
USE_CCSH_ENCODER_TIME	0 or 1
CCSH_ENCODER_ACTION_TIME	0 or 6
{ (NUM_PILOTS) *{ (NUM_SCH)*	
CCSH_ENCODER_TYPE	0 or 1
} (NUM_SCH) *} (NUM_PILOTS)*	
FUNDICATED_BCMC_IND	1
ADD_PLCM_FOR_FCH_INCL	0 or 1
ADD_PLCM_FOR_FCH_TYPE	0 or 1
ADD_PLCM_FOR_FCH_39	0 or 39
RESERVED	0 - 7 (as needed)

USE_TIME - Use action time indicator.

This field indicates whether an explicit action time is specified in this message.

If an explicit action time is specified in this message, the base station shall set this field to ‘1’; otherwise, the base station shall set this field to ‘0’.

ACTION_TIME - Action time.

If the USE_TIME field is set to ‘1’, the base station shall set this field to the System Time minus $FRAME\_OFFSET_S \times 1.25$ ms, in units of 80 ms (modulo 64), at which the handoff is to take effect. If the USE_TIME field is set to ‘0’, the base station shall omit this field.

HDM_SEQ - *Universal Handoff Direction Message* sequence number.

This field is used by the mobile station in the *Power Measurement Report Message* to identify the order in which the reported pilot strengths are sent.

The base station shall set this field to the handoff message sequence number, as specified in 2.6.6.2.2.10.

PARMS_INCL - Parameters included indicator.

The base station shall set this field to ‘1’, if P_REV and SERV_NEG_TYPE are included; otherwise, the base station shall set this field ‘0’.

P_REV - Protocol revision level.

If PARMS_INCL is set to ‘1’, the base station shall set this field to the base station protocol revision level that the mobile station is to use after completion of the handoff; otherwise, the base station shall omit this field.

SERV_NEG_TYPE - Service negotiation type.

If PARMS_INCL is set to ‘1’, the base station shall include the field SERV_NEG_TYPE and set this field as described below; otherwise, the base station shall omit this field.

If the mobile station is to use service negotiation, the base station shall set this field to ‘1’. If the mobile station is to use service option negotiation, the base station shall set this field to ‘0’.

SEARCH_INCLUDED - Pilot search parameters included.

If the mobile station is to change its pilot search parameters, the base station shall set this field to ‘1’; otherwise, the base station shall set this field to ‘0’.

SRCH_WIN_A - Search window size for the Active Set and Candidate Set.

If SEARCH_INCLUDED is set to ‘1’, the base station shall include the field SRCH_WIN_A and set this field to the window size parameter shown in Table 2.6.6.2.1-1 corresponding to the number of PN chips that the mobile station is to search for pilots in the Active Set and the Candidate Set; otherwise, the base station shall omit this field.

SRCH_WIN_N - Search window size for the Neighbor Set.

If SEARCH_INCLUDED is set to '1', the base station shall include the field SRCH_WIN_N and set this field to the window size parameter shown in Table 2.6.6.2.1-1 corresponding to the search window size to by used by mobile stations for the Neighbor Set after completion of the handoff; otherwise, the base station shall omit this field.

SRCH_WIN_R - Search window size for the Remaining Set.

If SEARCH_INCLUDED is set to '1', the base station shall include the field SRCH_WIN_R and set this field to the window size parameter shown in Table 2.6.6.2.1-1 corresponding to the search window size to by used by mobile stations for the Remaining Set after completion of the handoff; otherwise, the base station shall omit this field.

T_ADD - Pilot detection threshold.

This value is used by the mobile station to trigger the transfer of a pilot from the Neighbor Set or Remaining Set to the Candidate Set (see 2.6.6.2.6) and to trigger the sending of the *Pilot Strength Measurement Message* or *Extended Pilot Strength Measurement Message* initiating the handoff process (see 2.6.6.2.5.2).

If SEARCH_INCLUDED is set to '1', the base station shall include the field T_ADD and set this field to the pilot detection threshold, expressed as an unsigned binary number equal to $\lfloor -2 \times 10 \times \log_{10} E_c/I_0 \rfloor$; otherwise, the base station shall omit this field.

T_DROP - Pilot drop threshold.

This value is used by mobile stations to start a handoff drop timer for pilots in the Active Set and the Candidate Set (see 2.6.6.2.3).

If SEARCH_INCLUDED is set to '1', the base station shall include the field T_DROP and set this field to the pilot drop threshold, expressed as an unsigned binary number equal to $\lfloor -2 \times 10 \times \log_{10} E_c/I_0 \rfloor$; otherwise, the base station shall omit this field.

T_COMP - Active Set versus Candidate Set comparison threshold.

The mobile station transmits a *Pilot Strength Measurement Message* or *Extended Pilot Strength Measurement Message* when the strength of a pilot in the Candidate Set exceeds that of a pilot in the Active Set by this margin (see 2.6.6.2.5.2).

If SEARCH_INCLUDED is set to '1', the base station shall include the field T_COMP and set this field to the threshold Candidate Set pilot to Active Set pilot ratio, in units of 0.5 dB; otherwise, the base station shall omit this field.

T_TDROP - Drop timer value.

Timer value after which an action is taken by the mobile station for a pilot that is a member of the Active Set or Candidate Set, and whose strength has not become greater than T_DROP. If the pilot is a member of the Active Set, a *Pilot Strength Measurement Message* or *Extended Pilot Strength Measurement Message* is issued. If the pilot is a member of the Candidate Set, it will be moved to the Neighbor Set.

If SEARCH_INCLUDED is set to '1', the base station shall include the field T_TDROP and set this field to the T_TDROP value shown in Table 2.6.6.2.3-1 corresponding to the drop timer value to be used by the mobile station; otherwise, the base station shall omit this field.

SOFT_SLOPE - The slope in the inequality criterion for adding a pilot to the Active Set, or dropping a pilot from the Active Set (see 2.6.6.2.3 and 2.6.6.2.5.2).

If SEARCH_INCLUDED is set to '1', the base station shall include the field SOFT_SLOPE in the additional fields and set this field as an unsigned binary number; otherwise, the base station shall omit this field.

ADD_INTERCEPT - The intercept in the inequality criterion for adding a pilot to the Active Set (see 2.6.6.2.5.2).

If SEARCH_INCLUDED is set to '1', the base station shall include the field ADD_INTERCEPT in the additional fields and set this field as a two's complement signed binary number in units of 0.5 dB; otherwise, the base station shall omit this field.

DROP_INTERCEPT - The intercept in the inequality criterion for dropping a pilot from the Active Set (see 2.6.6.2.3).

If SEARCH_INCLUDED is set to '1', the base station shall include the field DROP_INTERCEPT in the additional fields and set this field as a two's complement signed binary number in units of 0.5 dB; otherwise, the base station shall omit this field.

EXTRA_PARMS - Extra parameters included.

If the base station includes the fields PACKET_ZONE_ID, FRAME_OFFSET, PRIVATE_LCM, RESET_L2, RESET_FPC, SERV_NEG_TYPE, ENCRYPT_MODE, NOM_PWR_EXT, NOM_PWR, RLGAIN_TRAFFIC_PILOT, DEFAULT_RLAG, NUM_PREAMBLE, BAND_CLASS, PERIODIC_SEARCH, or CDMA_FREQ in this message, the base station shall set this field to '1'; otherwise, the base station shall set this field to '0'.

PACKET_ZONE_ID - Packet data services zone identifier.

If EXTRA_PARMS is set to '1', the base station shall include the field PACKET_ZONE_ID and set this field as described below; otherwise, the base station shall omit this field.

If the base station supports a packet data service zone, the base station shall set this field to the non-zero packet data services zone identifier that the mobile station is to use after completion of the handoff.

If the base station does not support a packet data service zone, the base station shall set this field to '00000000'.

FRAME_OFFSET - Frame offset.

The Forward and Reverse Traffic Channel frames are delayed FRAME_OFFSET × 1.25 ms relative to system timing (see [2]).

If EXTRA_PARMS is set to '1', the base station shall include the field FRAME_OFFSET and set this field to the Forward and Reverse Traffic Channel frame offset (the frame offset does not apply to the F-PDCH); otherwise, the base station shall omit this field.

PRIVATE_LCM - Private long code mask indicator.

This field is used to change the long code mask after a hard handoff.

If EXTRA_PARMS is set to '1', the base station shall include the field PRIVATE_LCM and set this field as described below; otherwise, the base station shall omit this field.

If the private long code mask is to be used after the handoff, the base station shall set this field to '1'; otherwise, the base station shall set this field to '0'.

RESET_L2 - Reset acknowledgment procedures command.

This field is used to reset acknowledgment processing in the mobile station.

If EXTRA_PARMS is set to '1', the base station shall include the field RESET_L2 and set this field as described below; otherwise, the base station shall omit this field.

If the field is included and the mobile station is to reset its acknowledgment procedures, the base station shall set this field to '1'; otherwise, the base station shall set this field to '0'.

RESET_FPC - Reset Forward Traffic Channel power control.

This field is used to reset the Forward Traffic Channel power control counters.

If EXTRA_PARMS is set to '1', the base station shall include the field RESET_FPC and set this field as described below; otherwise, the base station shall omit this field.

The base station shall set this field to '0' if the Forward Traffic Channel power control counters are to be maintained after completion of the handoff. If the counters are to be initialized as specified in 2.6.4.1.1.1, then the base station shall set this field to '1'.

ENCRYPT_MODE - Message encryption mode.

If EXTRA_PARMS is set to '1', the base station shall include the field ENCRYPT_MODE and set this field to the ENCRYPT_MODE value shown in Table 3.7.2.3.2.8-2 corresponding to the encryption mode that is to be used for messages sent on the Forward and Reverse Traffic Channels, as specified in 2.3.12.2; otherwise, the base station shall omit this field.

NOM_PWR_EXT - Extended nominal transmit power.

If EXTRA_PARMS is set to '1', the base station shall include this field and set this field as described below; otherwise, the base station shall omit this field.

If the mobile station is being handed off to a base station operating in Band Class 0 or Band Class 3, the base station shall set this field to '0'; otherwise, the base station shall set it as follows:

If the correction factor to be used by the mobile station in the open loop power estimate is between -24 dB and -9 dB inclusive; otherwise (the correction factor is in the range -8 dB to 7 dB inclusive), the base station shall set this field to '0'.

NOM_PWR - Nominal transmit power offset.

If EXTRA_PARMS is set to '1', the base station shall include the field NOM_PWR and set this field to the correction factor to be used by the mobile station in the open loop power estimate, expressed as a two's complement value in units of 1 dB (see [2]); otherwise, the base station shall omit this field.

RLGAIN_TRAFFIC_PILOT - Gain adjustment of the Reverse Traffic Channel relative to the Reverse Pilot Channel power for Radio configurations greater than 2.

If EXTRA_PARMS is set to '1', the base station shall include this field and set it to the correction factor to be used by mobile stations in setting the power of a reverse traffic channel, expressed as a two's complement value in units of 0.125 dB (see [2]; otherwise, the base station shall omit this field.

DEFAULT_RLAG - Default reverse link attribute gain used indicator.

If EXTRA_PARMS is set to '0', the base station shall omit this field; otherwise, the base station shall set this field as follows:

If the mobile station is to use the default values for the reverse link attribute gain, as specified in [2] after completion of handoff, the base station shall set this field to '1'; otherwise, the base station shall set this field to '0'.

NUM_PREAMBLE - Number of Traffic Channel preamble.

If EXTRA_PARMS is set to ‘0’, the base station shall omit the NUM_PREAMBLE field; otherwise, the base station shall include this field and set it to the length of Traffic Channel preamble that the mobile station is to send when performing a handoff; as follows:

If, after the handoff, radio configuration 1 or radio configuration 2 is to be used, the base station shall set NUM_PREAMBLE to the Traffic Channel preamble length in 20 ms units; otherwise, the base station shall set NUM_PREAMBLE to the value shown in Table 3.7.3.3.2.17-1 corresponding to the Traffic Channel preamble length in 1.25 ms units.

BAND_CLASS - Band class.

If EXTRA_PARMS is set to ‘1’, the base station shall include the field BAND_CLASS and set this field to the CDMA band class corresponding to the CDMA frequency assignment for the CDMA Channel as specified in [30]; otherwise, the base station shall omit this field.

CDMA_FREQ - Frequency assignment.

If EXTRA_PARMS is set to ‘0’, the base station shall omit this field; otherwise, the base station shall set this field as follows:

If a Radio Configuration associated with Spreading Rate 1 is used, the base station shall set this field to the CDMA Channel number, in the specified CDMA band class, corresponding to the CDMA frequency assignment for the CDMA Channel as specified in [2]. If a Radio Configuration associated with Spreading Rate 3 is used, the base station shall include the field CDMA_FREQ and set this field to the CDMA Channel number, in the specified CDMA band class, corresponding to the CDMA center SR3 frequency assignment for the CDMA Channel.

RETURN_IF_HANDOFF_FAIL - Return on failure flag.

If EXTRA_PARMS is set to ‘1’, the base station shall include the field RETURN_IF_HANDOFF_FAIL and set this field as described below; otherwise, the base station shall omit this field.

If the base station includes this field, it shall set this field to ‘1’ if the mobile station is to resume the use of the Active Set on the Serving Frequency following an unsuccessful hard handoff attempt, as specified in 2.6.6.2.8.2; otherwise, the base station shall set this field to ‘0’.

COMPLETE_SEARCH - Flag to complete search.

If RETURN_IF_HANDOFF_FAIL is included and is set to ‘1’, the base station shall include the field COMPLETE_SEARCH and set this field as described below; otherwise, the base station shall omit this field.

If the base station includes this field, it shall set this field to '1' if the mobile station is to complete the search of the Candidate Frequency Search Set before resuming the use of the Active Set on the Serving Frequency when an inter-frequency handoff attempt is unsuccessful, as specified in 2.6.6.2.8.2; otherwise, the base station shall set this field to '0'.

PERIODIC_SEARCH - Flag to search the Candidate Frequency periodically.

If EXTRA_PARMS is set to '1', the base station shall include the field PERIODIC_SEARCH and set this field as described below; otherwise, the base station shall omit this field.

If the base station includes this field, it shall set this field to '1' if the mobile station is to periodically search the Candidate Frequency, as specified in 2.6.6.2.8.3; otherwise, the base station shall set this field to '0'.

SCR_INCLUDED - Service Configuration Record included indicator.

If EXTRA_PARMS is set to '1', the base station shall include the field SCR_INCLUDED and shall set this field as described below; otherwise, the base station shall omit this field.

The base station shall set this field to '1' if it includes the Service Configuration Record in the message; otherwise, the base station shall set this field to '0'.

SERV_CON_SEQ - Connect sequence number.

If SCR_INCLUDED is included and is set to '1', the base station shall include the field SERV_CON_SEQ and shall set this field to the connect sequence number pertaining to this service configuration as specified in 3.6.4.1.2.1.2.

If SCR_INCLUDED is included and is set to '1', the base station shall include one occurrence of the following three-field record to specify the service configuration.

RECORD_TYPE - Information record type.

If SCR_INCLUDED is included and is set to '1', the base station shall include the field RECORD_TYPE and shall set this field to the record type value shown in Table 3.7.5-1 corresponding to the Service Configuration information record.

RECORD_LEN - Information record length.

If SCR_INCLUDED is included and is set to '1', the base station shall include the field RECORD_LEN and shall set this field to the number of octets included in the type-specific fields of the Service Configuration information record.

Type-specific fields - Type-specific fields.

If SCR_INCLUDED is included and is set to '1', the base station shall include the type specific fields and shall set these fields as specified in 3.7.5.7 for the Service Configuration information record.

NNSCR_INCLUDED - Non-negotiable Service Configuration Record Included indicator

The base station shall omit this field, if EXTRA_PARMS is set to ‘0’; otherwise, the base station shall include this field and set this field as described below:

The base station shall set this field to ‘1’, if the Non-negotiable Service Configuration record is included in this message; otherwise, the base station shall set this field to ‘0’.

If NNSCR_INCLUDED is included and is set to ‘1’, the base station shall include one occurrence of the following three-field record to specify the non-negotiable service configuration.

RECORD_TYPE - Information record type.

If NNSCR_INCLUDED is included and is set to ‘1’, the base station shall include the field RECORD_TYPE and shall set this field to the record type value shown in Table 3.7.5-1 corresponding to the Non-Negotiable Service Configuration information record.

RECORD_LEN - Information record length.

If NNSCR_INCLUDED is included and is set to ‘1’, the base station shall include the field RECORD_LEN and shall set this field to the number of octets included in the type-specific fields of the Non-Negotiable Service Configuration information record.

Type-specific fields - Type-specific fields.

If NNSCR_INCLUDED is included and is set to ‘1’, the base station shall include the type specific fields and shall set these fields as specified in 3.7.5.20 for the Non-Negotiable Service Configuration information record.

USE_PWR_CNTL_STEP - Power control step size indicator.

The base station shall set this field to ‘1’ if the field PWR_CNTL_STEP is included in the message.

PWR_CNTL_STEP - Power control step size.

If USE_PWR_CNTL_STEP is set to ‘1’, then the base station shall include the field PWR_CNTL_STEP and set this field to the step size that the mobile station is to use for closed loop power control, according to Table 3.7.3.3.2.25-1; otherwise, the base station shall omit this field.

CLEAR_RETRY_DELAY - Clear retry delay indicator.

The base station shall set this field to ‘1’ if the mobile station is to clear any existing retry delay which it has stored (see 2.6.6.2.5.1); otherwise, the base station shall set this field to ‘0’.

SCH_INCL - Supplemental Channel related parameters included indicator.

The base station shall set this field to '1' if this message includes the NUM_FOR_ASSIGN, NUM_REV_ASSIGN, NUM_FOR_SCH, NUM_REV_SCH, and NUM_SCH fields. Otherwise, the base station shall set this field to '0'.

NUM_FOR_ASSIGN - Number of Forward Supplemental Channel assigned.

If SCH_INCL is set to ‘0’, the base station shall omit this field; otherwise, the base station shall set this field to the number of Forward Supplemental Channel assigned.

The base station shall include NUM_FOR_ASSIGN occurrences of the following five fields (FOR_SCH_ID, FOR_SCH_DURATION, FOR_SCH_START_TIME_INCL, FOR_SCH_START_TIME, and SCCL_INDEX).

FOR_SCH_ID - Forward Supplemental Channel identifier.

The base station shall set this field to the Identifier of the Forward Supplemental Channel.

FOR_SCH_DURATION - Duration of Forward Supplemental Channel assignment.

The base station shall set this field to the duration (see Table 3.7.3.3.2.37-3), starting at the start time of the message specified by FOR_SCH_START_TIME, during which the mobile station is to process the Forward Supplemental Channel.

The base station shall set this field to ‘0000’ to indicate that the mobile station should stop processing the Forward Supplemental Channel starting at the explicit start time of the message specified by FOR_SCH_START_TIME or at the implicit start time if FOR_SCH_START_TIME_INCL is set to ‘0’.

The base station shall set this field to ‘1111’ to indicate that the mobile station should process the Forward Supplemental Channel, starting at the start time of the message specified by FOR_SCH_START_TIME, until the start time specified by a subsequent Forward Supplemental Channel assignment corresponding to the same forward Supplemental Channel (see 2.6.6.2.5.1.1).

FOR_SCH_START_TIME_INCL - Start time included indicator.

If FOR_SCH_DURATION is not equal to ‘0000’, the base station shall set this field to ‘1’. If FOR_SCH_DURATION is equal to ‘0000’, the base station shall set this field as follows:

The base station shall set this field to ‘1’ if FOR_SCH_START_TIME is included in this message; otherwise, the base station shall set this field to ‘0’.

FOR_SCH_START_TIME - Start time for Forward Supplemental Channel Assignment.

If FOR_SCH_START_TIME_INCL is set to ‘0’, the base station shall omit this field; otherwise, the base station shall set this field to the System Time, in units of time specified by START_TIME_UNIT, (modulo 32) at which the mobile station is to start processing (if FOR_SCH_DURATION is not equal to ‘0000’) or stop processing (if FOR_SCH_DURATION is equal to ‘0000’) the Forward Supplemental Channel specified in this message. The explicit start time to start or stop processing the Forward Supplemental Channels is the time for which

$$(\lfloor t/(\text{START\_TIME\_UNIT}+1)\rfloor - \text{FOR\_SCH\_START\_TIME}) \bmod 32 = 0,$$

where t is the System Time in units of 20 ms.

SCCL_INDEX - Supplemental Channel Code list index.

The base station shall set this field to the index of the record in the Forward Supplemental Channel Code list corresponding to the FOR_SCH_ID. The base station shall include an SCCL_INDEX whose SCH Active Set is a subset of the Active Set of the Fundamental Channel, Dedicated Control Channel, or both.

NUM_REV_ASSIGN - Number of Reverse Supplemental Channel assigned.

If SCH_INCL is set to ‘0’, the base station shall omit this field; otherwise, the base station shall set this field to the number of Reverse Supplemental Channel assigned.

The base station shall include NUM_REV_ASSIGN occurrences of the following five fields (REV_SCH_ID, REV_SCH_DURATION, REV_SCH_START_TIME_INCL, REV_SCH_START_TIME, and REV_SCH_NUM_BITS_IDX).

REV_SCH_ID - Reverse Supplemental Channel Identifier.

The base station shall set this field to the identifier of the Reverse Supplemental Channel.

REV_SCH_DURATION - Duration of Reverse Supplemental Channel assignment.

The base station shall set this field to '0000' to indicate that the mobile station is to stop transmitting on the Reverse Supplemental Channel specified by REV_SCH_ID at the explicit start time specified by REV_SCH_START_TIME or at the implicit start time if REV_SCH_START_TIME_INCL is set to ‘0’. The base station shall set this field to '1111' to indicate that the mobile station may transmit on the Reverse Supplemental Channel specified by REV_SCH_ID, starting at the explicit start time specified by REV_SCH_START_TIME in this message, until the start time specified by a subsequent Reverse Supplemental Channel assignment corresponding to the same Supplemental Channel (see 2.6.6.2.5.1.1). The base station shall set this field to the duration according to Table 3.7.3.3.2.37-3, starting at the explicit start time specified by REV_SCH_START_TIME, during which the mobile station may transmit on the Reverse Supplemental Channel specified by REV_SCH_ID.

REV_SCH_START_TIME_INCL - Start time included indicator.

If REV_SCH_DURATION is not equal to ‘0000’, the base station shall set this field to ‘1’. If REV_SCH_DURATION is equal to ‘0000’, the base station shall set this field as follows:

The base station shall set this field to ‘1’ if REV_SCH_START_TIME is included in this message; otherwise, the base station shall set this field to ‘0’.

REV_SCH_START_TIME - Start time for Reverse Supplemental Channel Assignment.

If REV_SCH_START_TIME_INCL is set to ‘0’, the base station shall omit this field; otherwise, the base station shall set this field to the System Time, in units of time specified by START_TIME_UNIT, (modulo 32) at which the mobile station may start transmitting (if REV_SCH_DURATION is not equal to ‘0000’) or stop transmitting (if REV_SCH_DURATION is equal to ‘0000’) on the Reverse Supplemental Channel specified in this message. The explicit start time to start or stop transmitting on the Reverse Supplemental Channel is the time for which

$$(\lfloor t/(START\_TIME\_UNIT_S+1)\rfloor - REV\_SCH\_START\_TIME) \bmod 32 = 0,$$

where t is the System Time in units of 20 ms.

REV_SCH_NUM_BITS_IDX - Reverse Supplemental Channel number of bits per frame index granted by the base station.

If USE_FLEX_NUM_BITS is equal to '0' or if USE_FLEX_NUM_BITS is equal to '1' and RSCH_NBIT_TABLE_ID[REV_SCH_ID] is equal to ‘0000’, then the base station shall set this field according to Table 3.7.3.3.2.37-2 to indicate the Reverse Supplemental Channel number of information bits per frame and the number of CRC bits per frame, that the mobile station may transmit on the reverse Supplemental Channel identified by REV_SCH_ID.

If USE_FLEX_NUM_BITS is equal to '1' and RSCH_NBIT_TABLE_ID[REV_SCH_ID] is not equal to ‘0000’, then the base station shall set this field to indicate the Reverse Supplemental Channel number of information bits per frame that the mobile station may transmit on the Reverse Supplemental Channel identified by REV_SCH_ID to be NUM_BITS[RSCH_NBIT_TABLE_ID[REV_SCH_ID]] [REV_SCH_NUM_BITS_IDX] and the Reverse Supplemental Channel number of CRC bits per frame that the mobile station may transmit on the Reverse Supplemental Channel identified by REV_SCH_ID to be CRC_LEN_IDX[RSCH_NBIT_TABLE_ID[REV_SCH_ID]] [REV_SCH_NUM_BITS_IDX].

FPC_SUBCHAN_GAIN - Forward power control subchannel relative gain.

The base station shall set FPC_SUBCHAN_GAIN equal to the power level of the forward link power control subchannel relative to that of 20 ms frames at a 9600 bps or 14400 bps rate on the Forward Fundamental Channel or the Forward Dedicated Control Channel indicated by $FPC\_PRI\_CHAN_S$. The base station shall set the value in units of 0.25 dB.

USE_PC_TIME - Use power control action time indicator.

This field indicates whether an explicit time [PC_ACTION_TIME] at which a new value for power control sub-channel to traffic ratio [FPC_SUBCHAN_GAIN] takes effect is specified in the message.

If an explicit action time is specified in this message, the base station shall set this field to '1'; otherwise, the base station shall set this field to '0'.

PC_ACTION_TIME - Power Control Subchannel gain action time.

If the USE_PC_TIME field is set to '1', the base station shall set this field to the System Time minus $FRAME\_OFFSET_S \times 1.25$ ms, in units of 80 ms (modulo 64), at which FPC_SUBCHAN_GAIN specified in this message is to take effect. If the USE_PC_TIME field is set to '0', the base station shall omit this field.

CH_IND - Channel Indicator.

The base station shall set this field as shown in Table 3.7.3.3.2.36-1.

Table 3.7.3.3.2.36-1. Channel Indicator

CH_IND (Binary)	Physical Resource(s) Allocated
000	Refer to EXT_CH_IND.
001	Reserved
010	Dedicated Control Channel
011	Reserved
100	Reserved
101	For Radio Configuration greater than 2, Fundamental Channel and Continuous Reverse Pilot Channel; For Radio Configuration 1 or 2, Fundamental Channel only.
110	Dedicated Control Channel and Continuous Reverse Pilot Channel
111	Fundamental Channel, Dedicated Control Channel and Continuous Reverse Pilot Channel

ACTIVE_SET_REC_LEN - Active Set record length.

The base station shall set this field to the number of octets in the ACTIVE_SET_REC_FIELDS included in this message.

ACTIVE_SET_REC_FIELDS - Active Set record fields.

The Active Set record fields are determined by the value of CH_IND, as described below.

REV_FCH_GATING_MODE - Reverse eighth gating mode indicator.

If CH_IND is set to '010' or '110', or if EXT_CH_IND does not signal allocation of R-FCH, then the base station shall omit this field; otherwise, the base station include this field and set it as follows:

The base station shall set this field to '1' if the mobile station is allowed to perform the reverse eighth gating mode after handoff; otherwise, the base station shall set this field to '0'.

REV_PWR_CNTL_DELAY_INCL - Reverse power control delay included indicator.

If REV_FCH_GATING_MODE is not included, or is included and set to '0', then the base station shall omit this field; otherwise, the base station shall include this field and set it as follows.

The base station shall set this field to '1' if REV_PWR_CNTL_DELAY is included in this message; otherwise, the base station shall set this field to '0'.

REV_PWR_CNTL_DELAY - The reverse power control delay.

If REV_PWR_CNTL_DELAY_INCL is not included, or is included and set to ‘0’, then the base station shall omit this field; otherwise, the base station shall include this field and set it as follows:

The base station shall set this field to the closed-loop reverse power control delay minus one (the closed-loop reverse power control delay is the time between the end of a gated-on reverse PCG and the beginning of the reverse PCG where the corresponding feedback is sent on the Forward Power Control Subchannel, see [2]), in units of 1.25 ms.

D_SIG_ENCRYPT_MODE - Dedicated channel signaling encryption mode indicator.

If ENCRYPT_MODE is included and is set to ‘11’, the base station shall include this field and shall set it to the dedicated channel signaling encryption mode, as shown in Table 3.7.4.5-1; otherwise the base station shall omit this field.

ENC_KEY_SIZE - Encryption key size indication.

If ENCRYPT_MODE is included and is set to ‘10’ or ‘11’, the base station shall include this field and set it to the encryption key size, as shown in Table 3.7.4.5-2; otherwise, the base station shall omit this field.

3XFL_1XRL_INCL - 3X Forward Link and 1X Reverse Link indicator.

The base station shall set this field to ‘1’ if the base station is assigning 3X traffic channel on the Forward Link and 1X traffic channel on the Reverse Link; otherwise, the base station shall set this field to ‘0’.

1XRL_FREQ_OFFSET - 1X Reverse Link frequency offset.

If 3XFL_1XRL_INCL is set to ‘0’, the base station shall omit this field; otherwise, the base station shall set this field as follows:

The base station shall set this field to the value shown in Table 3.7.2.3.2.21-8 corresponding to the frequency offset of the 1X reverse link.

SYNC_ID_INCL - Service Configuration synchronization identifier included indicator.

If the SCR_INCLUDED field is included and is set to '1' or the NNSCR_INCLUDED field is included and is set to '1', or P_REV_IN_USE is equal or greater than 11, the base station shall include this field; otherwise, the base station shall omit this field. If included, the base station shall set this field as follows:

The base station shall set this field to '1' if the SYNC_ID field is included in this message; otherwise, the base station shall set this field to '0'.

SYNC_ID_LEN - Service Configuration synchronization identifier length.

If the SYNC_ID_INCL field is not included or is included and is set to '0', the base station shall omit this field; otherwise, the base station shall include this field and set it as follows:

The base station shall set this field to the length (in octets) of the SYNC_ID field included in this message. The base station shall set this field to a value larger than zero.

SYNC_ID - Service Configuration synchronization identifier.

If the SYNC_ID_INCL field is not included or is included and is set to '0', the base station shall omit this field; otherwise, the base station shall include this field and set it as follows:

If the SCR_INCLUDED field is included and is set to '1' or the NNSCR_INCLUDED field is included and is set to '1', the base station shall set this field to the synchronization identifier corresponding to the service configuration conveyed by this message; otherwise, the base station shall set this field to the updated synchronization identifier corresponding to the current service configuration.

CC_INFO_INCL - Call Control information included indicator.

If the SCR_INCLUDED field is not included or is included but is set to '0', the base station shall omit this field; otherwise, the base station shall include this field and set it as follows:

The base station shall set this field to '1' if Call Control related parameters (to assign new call(s)) are included in this message; otherwise, the base station shall set this field to '0'.

NUM_CALLS_ASSIGN - Number of call assignments.

If the CC_INFO_INCL field is not included or is included but is set to ‘0’, the base station shall omit this field; otherwise, the base station shall include this field and set it as follows:

The base station shall set this field to the number of new call assignments included in this message.

The base station shall include NUM_CALLS_ASSIGN occurrences of the following variable length record (CON_REF, RESPONSE_IND, TAG, BYPASS_ALERT_ANSWER as per the following requirements).

CON_REF – Connection reference.

The base station shall set this field to the connection reference of the service option connection corresponding to this call.

RESPONSE_IND – Response indicator.

The base station shall set this field to ‘1’ if this call assignment is a response to an *Enhanced Origination Message* from the mobile station; otherwise, the base station shall set this field to ‘0’.

TAG – Transaction identifier.

If the RESPONSE_IND field is set to ‘0’, the base station shall omit this field; otherwise, the base station shall include this field and set it as follows:

The base station shall set this field to the value of the TAG field received in the *Enhanced Origination Message* to which this call assignment is the response.

BYPASS_ALERT_ANSWER - Bypass alert indicator.

If the RESPONSE_IND field is set to ‘1’, the base station shall omit this field; otherwise, the base station shall include this field and set it as follows:

If the mobile station is to bypass the *Waiting for Order Substate* and the *Waiting for Mobile Station Answer Substate* for this call, the base station shall set this field to ‘1’; otherwise, the base station shall set this field to ‘0’.

CS_SUPPORTED - Concurrent Services supported indicator.

If the base station supports concurrent services, the base station shall set this field to ‘1’; otherwise, the base station shall set this field to ‘0’.

CHM_SUPPORTED – Control Hold Mode supported indicator.

The base station shall set this field to '1' to indicate that the base station supports the Control Hold Mode; otherwise, the base station shall set this field to '0'.

CDMA_OFF_TIME_REP_SUP_IND – CDMA off time report supported indicator.

If the base station supports mobile station report for CDMA off time information using the *CDMA Off Time Report Message*, the base station shall set this field to '1'; otherwise, the base station shall set this field to '0'.

CDMA_OFF_TIME_REP_THRESHOLD_UNIT – CDMA off time report threshold unit

If CDMA_OFF_TIME_REP_SUP_IND is set to '0', the base station shall omit this field; otherwise, the base station shall include this field and set it as follows:

The base station shall set this field to the time unit used in CDMA_OFF_TIME_REP_THRESHOLD, as specified in Table 3.7.2.3.2.13-5

CDMA_OFF_TIME_REP_THRESHOLD – CDMA off time report threshold

If CDMA_OFF_TIME_REP_SUP_IND is set to '0', the base station shall omit this field; otherwise, the base station shall include this field and set it as follows:

The base station shall set this field to the time in units of CDMA_OFF_TIME_REP_THRESHOLD_UNIT such that if the mobile station goes away from the CDMA traffic channel longer than this value, the mobile station is to send a *CDMA Off Time Report Message*.

RELEASE_TO_IDLE_IND - Release to Idle State allowed indicator.

If the mobile station is allowed to return to the *Mobile Station Idle State* upon call release, the base station shall set this field to '1'; otherwise, the base station shall set this field to '0'.

MSG_INTEGRITY_SUP - Message integrity supported indicator.

If the base station supports message integrity, the base station shall set this field to '1'; otherwise, the base station shall set this field to '0'.

GEN_2G_KEY - Generate 2G encryption key indicator.

If the base station is to generate a new CMEAKEY from the current CK, the base station shall set this field to '1' to order the mobile station to perform similar procedures; otherwise, the base station shall set this field to '0'.

REGISTER_IN_IDLE - Register in idle state indicator.

If the mobile station is to perform registration after transitioning back to the *Mobile Station Idle State*, the base station shall set this field to '1'; otherwise, the base station shall set this field to '0'.

PLCM_TYPE_INCL - The Public Long Code Mask type Included Indicator.

If the mobile station is to change its public long code mask after handoff, the base station shall set this field to '1'; otherwise, the base station shall set this field to ‘0’.

PLCM_TYPE - The Public Long Code Mask Type.

If PLCM_TYPE_INCL is set to ‘0’, the base station shall omit this field; otherwise, the base station shall include this field and set it as follows:

The base station shall set this field to the Public Long Code Mask type to be used by the mobile station after the handoff as specified in Table 3.7.2.3.2.21-5.

PLCM_TYPE ‘0010’ shall not be used when the mobile station is not in its home country (i.e., the MCC of the mobile station is different from the MCC of this base station).

PLCM_TYPE ‘0011’ shall not be used when the mobile station is not in its home network (i.e., the MCC or MNC of the mobile station is different from the MCC or MNC of this base station).

PLCM_39 - The 39 LSBs of the Public Long Code Mask.

If PLCM_TYPE is included and set to ‘0001’, the base station shall include this field and set it to the 39 least significant bits of the public long code mask to be used by the mobile station after the handoff as defined in Table 3.6.4.1.10; otherwise, the base station shall omit this field.

T_TDROP_RANGE_INCL - Drop timer range value included indicator.

If SEARCH_INCLUDED is set to ‘0’, the base station shall omit this field; otherwise, the base station shall include this field and set it as follows:

The base station shall set this field to '1' if the T_TDROP_RANGE field is included in this message; otherwise, the base station shall set this field to '0'.

T_TDROP_RANGE - Drop timer range value.

Timer range value to use in association with the T_TDROP parameter when determining the drop timer expiration.

If T_TDROP_RANGE_INCL is not included, or included and set to '0', the base station shall omit this field; otherwise, the base station shall set this field to the T_TDROP_RANGE value shown in Table 2.6.6.2.3-2 corresponding to the timer expiration range value to be used by the mobile station.

FOR_PDCH_SUPPORTED - Forward Packet Data Channel supported indicator.

If the base station supports Forward Packet Data Channel, the base station shall set this field to ‘1’; otherwise, the base station shall set this field to ‘0’.

PDCH_CHM_SUPPORTED – PDCH Control Hold Mode supported indicator.

If FOR_PDCH_SUPPORTED is set to ‘0’, the base station shall omit this field; otherwise, the base station shall include this field and set it as follows:

The base station shall set this field to ‘1’ to indicate that the base station supports the PDCH Control Hold Mode; otherwise, the base station shall set this field to ‘0’.

PILOT_INFO_REQ_SUPPORTED - Pilot information request supported indicator.

If the base station supports mobile station request for pilot information using the “Pilot Information” record in the *Base Station Status Request Message*, the base station shall set this field to ‘1’; otherwise, the base station shall set this field to ‘0’.

ENC_SUPPORTED – Encryption fields included.

The base station shall set this field to ‘1’ if the encryption related fields are included; otherwise, the base station shall set this field to ‘0’.

SIG_ENCRYPT_SUP – Signaling Encryption supported indicator.

If ENC_SUPPORTED is equal to ‘1’, the base station shall include this field; otherwise, the base station shall omit this field. If this field is included, this field indicates which signaling encryption algorithms are supported by the base station.

This field consists of the subfields shown in Table 2.7.1.3.2.1-5.

If this field is included, the base station shall set the subfields as follows:

The base station shall set the CMEA subfield to ‘1’.

The base station shall set each other subfield to ‘1’ if the corresponding signaling algorithm is supported by the base station; otherwise, the base station shall set the subfield to ‘0’.

The base station shall set the RESERVED subfield to ‘00000’.

UI_ENCRYPT_SUP – User information Encryption supported indicator.

If ENC_SUPPORTED is equal to ‘1’, the base station shall include this field; otherwise, the base station shall omit this field. If this field is included, the base station shall set this field to indicate the supported user information encryption algorithms.

This field consists of the subfields shown in Table 2.7.1.3.2.4-9.

The base station shall set each subfield to ‘1’ if the corresponding user information encryption algorithm is supported by the base station; otherwise, the base station shall set the subfield to ‘0’.

USE_SYNC_ID - Sync ID supported indicator.

The base station shall set this field to '1' to indicate that the mobile station is permitted to include the SYNC_ID field in the *Page Response Message*, the *Reconnect Message*, the *Origination Message*, and the *Enhanced Origination Message*; otherwise, the base station shall set this field to '0'.

SID_INCL - SID included indicator.

If the SID field is included in this message, the base station shall set this field to '1'; otherwise, the base station shall set this field to '0'.

SID - System identification.

If the SID_INCL field is set to '0', the base station shall omit this field; otherwise, the base station shall include this field and set it as follows:

The base station shall set this field to the system identification number for this wireless system (see 2.6.5.2).

NID_INCL - NID included indicator.

If the NID field is included in this message, the base station shall set this field to '1'; otherwise, the base station shall set this field to '0'.

NID - Network identification.

If the NID_INCL field is set to '0', the base station shall omit this field; otherwise, the base station shall include this field and set it as follows:

This field serves as a sub-identifier of a system as defined by the owner of the SID.

The base station shall set this field to the network identification number for this network (see 2.6.5.2).

SDB_SUPPORTED - Short Data Burst supported indicator.

The base station shall set this field to '1' if the mobile station is permitted to send a Short Data Burst; otherwise, the base station shall set this field to '0'.

MOB_QOS - Indicator granting permission to the mobile station to request QoS parameter settings in the *Origination Message*, *Origination Continuation Message*, or *Enhanced Origination Message*.

If CS_SUPPORTED is equal to '0', the base station shall omit this field; otherwise the base station shall include this field and shall set it as follows:

The base station shall set this field to '1', if the mobile station is allowed to include a QoS record in the *Origination Message*, *Origination Continuation Message*, or *Enhanced Origination Message*; otherwise, the base station shall set this field to '0'.

MS_INIT_POS_LOC_SUP_IND - Mobile station initiated position location determination supported indicator.

If the target base station supports mobile station initiated position determination, the base station shall set this field to '1'; otherwise, the base station shall set this field to '0'.

REV_PDCH_SUPPORTED - Reverse Packet Data Channel supported indicator.

If FOR_PDCH_SUPPORTED is set to '0', the base station shall omit this field; otherwise, the base station shall include this field and set it as follows:

If the base station supports the Reverse Packet Data Channel (R-PDCH), the base station shall set this field to '1'; otherwise, the base station shall set this field to '0'.

PZ_HYST_ENABLED - Packet zone hysteresis enabled.

If the PACKET_ZONE_ID field is set to '00000000', the base station shall omit this field; otherwise, the base station shall include this field and set it as follows:

If the packet zone hysteresis feature is to be enabled at the mobile station, the base station shall set this field to '1'; otherwise, the base station shall set this field to '0'.

PZ_HYST_INFO_INCL - Packet zone hysteresis information included indicator.

If the PZ_HYST_ENABLED field is included and is set to '1', the base station shall include this field and set it as follows; otherwise, the base station shall omit this field.

If the base includes the PZ_HYST_LIST_LEN, PZ_HYST_ACT_TIMER and packet zone hysteresis timer related fields, the base station shall set this field to '1'; otherwise, the base station shall set this field to '0'.

PZ_HYST_LIST_LEN - Packet zone hysteresis list length.

If the PZ_HYST_INFO_INCL field is included and is set to '1', the base station shall include this field and set it as follows; otherwise, the base station shall omit this field.

The base station shall set this field to the length of the packet zone hysteresis list. This field shall be within the range '0001' through '1111', inclusive.

PZ_HYST_ACT_TIMER - Packet zone hysteresis activation timer.

If the PZ_HYST_INFO_INCL field is included and is set to '1', the base station shall include this field and set it as follows; otherwise, the base station shall omit this field.

The base station shall set to the value of the packet zone hysteresis activation timer (in units of seconds). This field shall be within the range '00000001' through '11111111', inclusive.

PZ_HYST_TIMER_MUL - Packet zone hysteresis timer multiplier.

If the PZ_HYST_INFO_INCL field is included and is set to '1', the base station shall include this field and set it as follows; otherwise, the base station shall omit this field.

The base station shall set the field to x, where x × 8^y seconds is the value of the hysteresis timer and y is the value indicated in the PZ_HYST_TIMER_EXP field. The base station shall set this field to a value that is between 1 and 7 inclusive. The value 0 is reserved.

PZ_HYST_TIMER_EXP - Packet zone hysteresis timer exponent.

If the PZ_HYST_INFO_INCL field is included and is set to '1', the base station shall include this field and set it as follows; otherwise, the base station shall omit this field.

The base station shall set the field to y, where x × 8^y seconds is the value of the hysteresis timer and x is the value indicated in the PZ_HYST_TIMER_MUL field. The base station shall set this field to a value that is between 0 and 4 inclusive. All the other values are reserved.

BCMC_ON_TRAFFIC_SUP - BCMC on traffic channel supported indicator.

The base station shall set this field to '1' to indicate that the BCMC feature is supported on traffic channel; otherwise, the base station shall set this field to '0'.

AUTO_REQ_TRAF_ALLOWED_IND - Autonomous BCMC request on traffic channel allowed indicator.

If the BCMC_ON_TRAFFIC_SUP field is set to '0', the base station shall omit this field; otherwise, the base station shall include this field and set it as follows:

The base station shall set this field to '1' to indicate that the mobile station is allowed to request for a BCMC flow autonomously on traffic channel; otherwise, the base station shall set this field to '0'.

SCH_BCMC_IND – BCMC on supplemental channel Indicator.

If the BCMC_ON_TRAFFIC_SUP field is set to '0', or if NUM_FOR_ASSIGN field is not included or is included and is set to '00', the base station shall omit this field; otherwise, the base station shall include this field and set it as follows:

If the channel assignment in this message contains a Forward Supplemental Channel used for BCMC transmission, the base station shall set this field to '1'; otherwise, the base station shall set this field to '0'.

ADD_PLCM_FOR_SCH_INCL – Additional PLCM for forward SCH included indicator.

If the SCH_BCMC_IND field is not included or is included and is set to '0', the base station shall omit this field; otherwise, the base station shall include this field and set it as follows:

If the additional PLCM for forward SCH is included in this message, the base station shall set this field to '1'; otherwise, the base station shall set this field to '0'.

ADD_PLCM_FOR_SCH_TYPE - The Additional Public Long Code Mask for forward SCH type indicator.

If ADD_PLCM_FOR_SCH_INCL is not included or is included and is set to '0', the base station shall omit this field; otherwise, the base station shall include this field and set it as follows:

The base station shall set this field to '1' to indicate PLCM specified by the base station. The field value '0' is reserved.

ADD_PLCM_FOR_SCH_35 - The 35 LSB bits of the additional Public Long Code Mask for forward SCH.

If ADD_PLCM_FOR_SCH_TYPE field is included and is set to '1', the base station shall include this field and set it to the 35 least significant bits of the public long code mask used by the mobile station; otherwise, the base station shall omit this field.

If SCH_BCMC_IND field is included and is set to '1', the base station shall include NUM_FOR_ASSIGN occurrences of the following record:

USE_ADD_PLCM_FOR_SCH - Use additional PLCM indicator for forward SCH.

The base station shall set this field to '1' if the additional PLCM included for forward SCH in this message is to be used for this Forward Supplemental Channel; otherwise, the base station shall set this field to '0'.

FSCH_OUTERCODE_INCL - Forward Supplemental Channel Outer Code included indicator.

The base station shall set this field to '1' if the Forward Supplemental Channel outer code information is included in this message; otherwise, the base station shall set this field to '0'.

FSCH_OUTERCODE_RATE - Outer Code Rate of the Forward Supplemental Channel.

If the FSCH_OUTERCODE_INCL field is not included or is included and is set to '0', the base station shall omit this field; otherwise, the base station shall include this field and set it as follows:

The base station shall set this field to the outer code rate of the Forward Supplemental Channel as specified in Table 3.7.2.3.2.38-3.

FSCH_OUTERCODE_OFFSET - Outer Coding Buffer Offset of the Forward Supplemental Channel.

If the FSCH_OUTERCODE_INCL field is not included or is included and is set to '0', the base station shall omit this field; otherwise, the base station shall include this field and set it as follows:

The base station shall set this field to the outer coding buffer offset of the Forward Supplemental Channel in units of 20ms as specified in [2].

MAX_ADD_SERV_INSTANCE - Maximum number of additional service reference identifiers allowed in origination

If the CS_SUPPORTED field is set to '0', the base station shall omit this field; otherwise, the base station shall include this field and set it as follows:

The base station shall set this field to the maximum number of additional service reference identifiers that can be included in the *Origination Message* or *Enhanced Origination Message*.

USE_CH_CFG_RRM – Channel configuration request allowed indicator.

The base station shall set this field to '1' to indicate that the mobile station is permitted to include the CH_IND and EXT_CH_IND fields in the *Resource Request Message*, and the *Resource Request Mini Message*; otherwise, the base station shall set this field to '0'.

TX_PWR_LIMIT_INCL - Transmit Power Limit inclusion for the current base station

If TX_PWR_LIMIT_DEFAULT is included in this message, the base station shall set this field to '1'; otherwise, the base station shall set this field to '0'.

TX_PWR_LIMIT_DEFAULT - Use the Default Transmit Power Limit

If TX_PWR_LIMIT_INCL is set to '0', the base station shall omit this field; otherwise, the base station shall include this field and set to as follows.

The base station shall set this field to '1' if the mobile station is to limit its transmission power in the 1915MHz – 1920MHz block of the PCS band to no more than the default value defined in [11]; otherwise, the base station shall set this field to '0' if the mobile station is to limit its transmission power to no more than the value indicated by TX_PWR_LIMIT.

TX_PWR_LIMIT - Transmit Power Limit for the current base station

If TX_PWR_LIMIT_DEFAULT is omitted, or if it is included and set to '1', the base station shall omit this field; otherwise, the base station shall include this field and set to as follows.

The base station shall set this field to thirty dB more than transmit power limit in dBm EIRP, in steps of 1 dB. This field can take the values 30 to 53 corresponding to maximum transmit power values 0 dBm to 23 dBm.

If the CH_IND field is set to '101', the base station shall include the following fields:

NUM_FOR_SCH - Number of Forward Supplemental Channel records.

If SCH_INCL is set to '0', the base station shall omit this field; otherwise, the base station shall set this field as follows:

The base station shall set this field to the number of the Forward Supplemental Channel records need to be updated.

If NUM_FOR_SCH is included and not equal to '00000', the base station shall include

NUM_FOR_SCH occurrence of the following three fields:

FOR_SCH_ID - Forward Supplemental Channel identifier.

The base station shall set this field to the identifier of the Forward Supplemental Channel.

SCCL_INDEX - Supplemental Channel Code list index.

The base station shall set this field to the index of the record in the Supplemental Channel Code list.

FOR_SCH_NUM_BITS_IDX - Forward Supplemental Channel number of information bits index.

If USE_FLEX_NUM_BITS is equal to '0' or if USE_FLEX_NUM_BITS is equal to '1' and FSCH_NBIT_TABLE_ID for FOR_SCH_ID is equal to ‘0000’, then the base station shall set this field according to Table 3.7.3.3.2.37-4 to indicate the number of information bits per frame and the length of the CRC field for the Forward Supplemental Channel identified by FOR_SCH_ID corresponding to SCCL_INDEX.

If USE_FLEX_NUM_BITS$_S$ is equal to '1' and FSCH_NBIT_TABLE_ID[FOR_SCH_ID] is not equal to ‘0000’, then the base station shall set this field to indicate that the number of information bits per frame for the Forward Supplemental channel identified by FOR_SCH_ID to be NUM_BITS[FSCH_NBIT_TABLE_ID[FOR_SCH_ID]][FOR_SCH_NUM_BITS_IDX] and the number of CRC bits per frame for the Forward Supplemental channel identified by FOR_SCH_ID to be CRC_LEN_IDX[FSCH_NBIT_TABLE_ID[FOR_SCH_ID]][FOR_SCH_NUM_BITS_IDX].

NUM_REV_SCH - Number of Reverse Supplemental Channel records.

If SCH_INCL is set to ‘0’, the base station shall omit this field; otherwise, the base station shall set this field as follows:

The base station shall set this field to the number of the Reverse Supplemental Channels need to be updated.

If NUM_REV_SCH is included and not equal to ‘00000’, the base station shall include NUM_REV_SCH occurrence of the following three fields:

REV_SCH_ID - Reverse Supplemental Channel identifier.

The base station shall set this field to the identifier of the Reverse Supplemental Channel.

REV_WALSH_ID - Reverse Supplemental Channel Walsh cover Identifier.

The base station shall set this field according to Table 3.7.3.3.2.37-1 to indicate the Walsh cover ID that the mobile station is to use when transmitting at the rate specified by REV_SCH_NUM_BITS_IDX on the Reverse Supplemental Channel specified by REV_SCH_ID. If only one reverse supplemental channel is assigned, the base station should set this field to the default value for the REV_WALSH_ID as specified in 2.6.4.2.

REV_SCH_NUM_BITS_IDX - Reverse Supplemental Channel number of bits per frame index.

If USE_FLEX_NUM_BITS is equal to '0' or if USE_FLEX_NUM_BITS is equal to '1' and RSCH_NBIT_TABLE_ID[REV_SCH_ID] is equal to ‘0000’, then the base station shall set this field according to Table 3.7.3.3.2.37-2 to indicate the Reverse Supplemental Channel number of information bits per frame and the CRC bits per frame, corresponding to REV_WALSH_ID field.

If USE_FLEX_NUM_BITS is equal to '1' and RSCH_NBIT_TABLE_ID[REV_SCH_ID] is not equal to ‘0000’, then the base station shall set this field to indicate the Reverse Supplemental Channel number of information bits per frame, corresponding to REV_WALSH_ID field to be NUM_BITS[RSCH_NBIT_TABLE_ID[REV_SCH_ID]] [REV_SCH_NUM_BITS_IDX] and the Reverse Supplemental Channel number of CRC bits per frame corresponding to REV_WALSH_ID field to be CRC_LEN_IDX[RSCH_NBIT_TABLE_ID[REV_SCH_ID]] [REV_SCH_NUM_BITS_IDX].

NUM_PILOTS - Number of pilots included in the message.

The base station shall set this field to the number of pilots included in the message. The base station shall set this field to an integer that is equal to or greater than 1.

SRCH_OFFSET_INCL - Target pilot channel search window offset included.

If the SRCH_OFFSET field is included in the following records, the base station shall set this field to ‘1’; otherwise, the base station shall set this field to ‘0’.

The base station shall include one occurrence of the following record for each of the NUM_PILOTS pilots included in the message:

PILOT_PN - Pilot PN sequence offset index.

The base station shall set this field to the pilot PN sequence offset for this pilot in units of 64 PN chips.

SRCH_OFFSET - Target pilot channel search window offset.

If SRCH_OFFSET_INCL equals to ‘1’, then the base station shall set this field to the value shown in Table 2.6.6.2.1-2 corresponding to the search window offset to be used by the mobile station for this target pilot. Otherwise, the base station shall omit this field.

ADD_PILOT_REC_INCL - Additional pilot information included indicator.

The base station shall set this field to '1' if additional pilot information listed in PILOT_REC_TYPE and RECORD_LEN fields are included. The base station shall set this field to '0' if the corresponding pilot is the common pilot and there is no additional pilot information included.

PILOT_REC_TYPE - Pilot record type.

If ADD_PILOT_REC_INCL is set to '1', the base station shall set this field to the PILOT_REC_TYPE value shown in Table 3.7.2.3.2.21-9 corresponding to the type of Pilot Record specified by this record.

If ADD_PILOT_REC_INCL is set to '0', the base station shall omit this field.

RECORD_LEN - Pilot record length.

If ADD_PILOT_REC_INCL is set to '1', the base station shall set this field to the number of octets in the type-specific fields of this pilot record.

If ADD_PILOT_REC_INCL is set to '0', the base station shall omit this field.

Type-specific fields - Pilot record type-specific fields.

If ADD_PILOT_REC_INCL is set to '1', the base station shall include type-specific fields based on the PILOT_REC_TYPE of this pilot record as described in 3.7.6.1.

If ADD_PILOT_REC_INCL is set to '0', the base station shall omit this field.

PWR_COMB_IND - Power control symbol combining indicator.

If the Forward Traffic Channel associated with this pilot will carry the same closed-loop power control subchannel bits as that of the previous pilot in this message, the base station shall set this field to '1'; otherwise, the base station shall set this field to '0'. The base station shall set this field to '0' in the first record in the pilot list.

CODE_CHAN_FCH - Code channel on the Fundamental Channel.

If a Radio Configuration associated with Spreading Rate 1 is used, the base station shall set this field to the code channel index (see [2]) that the mobile station is to use on the Fundamental Channel of the Forward Traffic Channel. If a Radio Configuration associated with Spreading Rate 3 is used, the base station shall set this field to the code channel index that the mobile station is to use for the Fundamental Channel on the center SR3 frequency.

If Radio Configuration 1, 2, 3, or 5 (see [2]) is used, the base station shall set this field in the range 1 to 63 inclusive. If Radio Configuration 4, 6, 8, 11, or 12 is used, the base station shall set this field in the range 1 to 127 inclusive. If Radio Configuration 7 or 9 is used, the base station shall set this field in the range 1 to 255 inclusive.

QOF_MASK_ID_FCH - Quasi-orthogonal function index on the Fundamental Channel.

If a Radio Configuration associated with Spreading Rate 1 is used, the base station shall set this field to the index of the Quasi-orthogonal function (see [2]). If a Radio Configuration associated with Spreading Rate 3 is used, the base station shall set this field to the index of the Quasi-orthogonal function on the center SR3 frequency.

NUM_SCH - Number of Supplemental Channel records.

If SCH_INCL is set to '0', the base station shall omit this field; otherwise, the base station shall set this field as follows:

The base station shall set this field to the number of the Supplemental Channel records need to be updated.

If NUM_SCH is included and not equal to '00000', the base station shall include NUM_SCH occurrence of the following five fields:

FOR_SCH_ID - Forward Supplemental Channel identifier.

The base station shall set this field the identifier of the Forward Supplemental Channel pertaining to this record.

SCCL_INDEX - Supplemental Channel Code list index.

The base station shall set this field to the index of the record in the Supplemental Channel Code list.

PILOT_INCL - The corresponding pilot included in Supplemental Channel Active Set indicator.

The base station shall set this field to '1' if the corresponding pilot is included in the Active Set of Supplemental Channel; otherwise, the base station shall set this field to '0'.

CODE_CHAN_SCH - Code channel on the Supplemental Channel.

If PILOT_INCL is included and set to '1', the base station shall set this field as follows; otherwise, the base station shall omit this field.

The base station shall set this field to the code channel index (see [2]) that the mobile station is to use on the Supplemental Channel of the Forward Traffic Channel indexed by SCCL_INDEX.

QOF_MASK_ID_SCH - Quasi-orthogonal function index on the Supplemental Channel.

If PILOT_INCL is included and set to '1', the base station shall set this field as follows; otherwise, the base station shall omit this field.

The base station shall set this field to the index of the Quasi-orthogonal function (see [2]).

3X_FCH_INFO_INCL – 3X Fundamental Channel information included indicator.

If the 3X Fundamental Channel information is included, the base station shall set this field to '1'; otherwise, the base station shall set this field to '0'.

The base station shall include NUM_PILOTS occurrences of the following record if 3X_FCH_INFO_INCL is set to '1'. The base station shall use the same order for the following fields as is used for the PILOT_PN fields listed in this message.

3X_FCH_LOW_INCL – FCH code channel on the lowest SR3 frequency included indicator.

If the Fundamental Channel on the lowest SR3 frequencies has a different code channel than the Fundamental Channel on the center SR3 frequency, the base station shall set this field to '1'; otherwise, the base station shall set this field to '0'.

QOF_MASK_ID_FCH_LOW – QOF index for the Fundamental Channel on the lowest SR3 frequency.

If 3X_FCH_LOW_INCL is set to '0', the base station shall omit this field; otherwise, the base station shall set this field as follows:

The base station shall set this field to the index of the Quasi-orthogonal function (see [2]) corresponding to the QOF index for the Fundamental Channel on the lowest SR3 frequency.

CODE_CHAN_FCH_LOW - Code channel for the Fundamental Channel on the lowest SR3 frequency.

If 3X_FCH_LOW_INCL is set to '0', the base station shall omit this field; otherwise, the base station shall set this field as follows:

The base station shall set this field to the code channel index (see [2]) that the mobile station is to use on the Fundamental Channel on the lowest SR3 frequency. If Radio Configuration 6 or 8 is used, the base station shall set this field in the range 1 to 127 inclusive. If Radio Configuration 7 or 9 is used, the base station shall set this field in the range 1 to 255 inclusive.

3X_FCH_HIGH_INCL – FCH code channel on the highest SR3 frequency included indicator.

If the Fundamental Channel on the highest SR3 frequencies has a different code channel than the Fundamental Channel on the center SR3 frequency, the base station shall set this field to '1'; otherwise, the base station shall set this field to '0'.

QOF_MASK_ID_FCH_HIGH – QOF index for the Fundamental Channel on the highest SR3 frequency.

If 3X_FCH_HIGH_INCL is set to ‘0’, the base station shall omit this field; otherwise, the base station shall set this field as follows:

The base station shall set this field to the index of the Quasi-orthogonal function (see [2]) corresponding to the QOF index for the Fundamental Channel on the highest SR3 frequency.

CODE_CHAN_FCH_HIGH – Code channel for the Fundamental Channel on the highest SR3 frequency.

If 3X_FCH_HIGH_INCL is set to ‘0’, the base station shall omit this field; otherwise, the base station shall set this field as follows:

The base station shall set this field to the code channel index (see [2]) that the mobile station is to use on the Fundamental Channel on the highest SR3 frequency. If Radio Configuration 6 or 8 is used, the base station shall set this field in the range 1 to 127 inclusive. If Radio Configuration 7 or 9 is used, the base station shall set this field in the range 1 to 255 inclusive.

3X_SCH_INFO_INCL – 3X Supplemental Channel information included indicator.

If SCH_INCL is set to ‘0’, the base station shall omit this field; otherwise, the base station shall set this field as follows:

If the 3X Supplemental Channel information is included, the base station shall set this field to ‘1’; otherwise, the base station shall set this field to ‘0’.

The base station shall include NUM_SCH occurrences of the following seven fields record if 3X_SCH_INFO_INCL is included and set to ‘1’.

FOR_SCH_ID - Forward Supplemental Channel identifier.

The base station shall set this field the identifier of the Forward Supplemental Channel pertaining to this record.

3X_SCH_LOW_INCL – SCH code channel on the lowest SR3 frequency included indicator.

If the Supplemental Channel on the lowest SR3 frequencies has a different code channel than the Supplemental Channel on the center SR3 frequency, the base station shall set this field to ‘1’; otherwise, the base station shall set this field to ‘0’.

QOF_MASK_ID_SCH_LOW – QOF index for the Supplemental Channel on the lowest SR3 frequency.

If 3X_SCH_LOW_INCL is set to ‘0’, the base station shall omit this field; otherwise, the base station shall set this field as follows:

The base station shall set this field to the index of the Quasi-orthogonal function (see [2]) corresponding to the QOF index for the Supplemental Channel on the lowest SR3 frequency.

CODE_CHAN_SCH_LOW - Code channel for the Supplemental Channel on the lowest SR3 frequency.

If 3X_SCH_LOW_INCL is set to ‘0’, the base station shall omit this field; otherwise, the base station shall set this field as follows:

The base station shall set this field to the code channel index (see [2]) that the mobile station is to use on the Supplemental Channel on the lowest SR3 frequency. If Radio Configuration 6 or 8 is used, the base station shall set this field in the range 1 to 127 inclusive. If Radio Configuration 7 or 9 is used, the base station shall set this field in the range 1 to 255 inclusive.

3X_SCH_HIGH_INCL – SCH code channel on the highest SR3 frequency included indicator.

If the Supplemental Channel on the highest SR3 frequencies has a different code channel than the Supplemental Channel on the center SR3 frequency, the base station shall set this field to ‘1’; otherwise, the base station shall set this field to ‘0’.

QOF_MASK_ID_SCH_HIGH – QOF index for the Supplemental Channel on the highest SR3 frequency.

If 3X_SCH_HIGH_INCL is set to ‘0’, the base station shall omit this field; otherwise, the base station shall set this field as follows:

The base station shall set this field to the index of the Quasi-orthogonal function (see [2]) corresponding to the QOF index for the Supplemental Channel on the highest SR3 frequency.

CODE_CHAN-_SCH_HIGH – Code channel for the Supplemental Channel on the highest SR3 frequency.

If 3X_SCH_HIGH_INCL is set to ‘0’, the base station shall omit this field; otherwise, the base station shall set this field as follows:

The base station shall set this field to the code channel index (see [2]) that the mobile station is to use on the Supplemental Channel on the highest SR3 frequency. If Radio Configuration 6 or 8 is used, the base station shall set this field in the range 1 to 127 inclusive. If Radio Configuration 7 or 9 is used, the base station shall set this field in the range 1 to 255 inclusive.

CCSH_INCLUDED - Code Combining Soft Handoff information included indicator.

The base station shall set this field to ‘1’ if Code Combining Soft Handoff information is included in this message; otherwise, the base station shall set this field to ‘0’.

USE_CCSH_ENCODER_TIME - Use Code Combining Soft Handoff Turbo Encoder swapping action time indicator.

If the CCSH_INCLUDED field is set to ‘0’, the base station shall omit this field; otherwise, the base station shall include this field and set it as follows.

If an explicit action time at which Turbo Encoder types (CCSH_ENCODER_TYPE) included in this message takes effect is specified, the base station shall set this field to ‘1’; otherwise, the base station shall set this field to ‘0’.

CCSH_ENCODER_ACTION_TIME - Code Combining Soft Handoff Turbo Encoder swapping action time.

If the USE_CCSH_ENCODER_TIME field is included and set to ‘1’, the base station shall set this field to the System Time minus $FRAME\_OFFSET_S \times 1.25$ ms, in units of 80ms (modulo 64), at which Turbo Encoder types included in this message are to take effect; otherwise, the base station shall omit this field.

If the CCSH_INCLUDED field is set to ‘1’, the base station shall include one occurrence of the following one field for each of the Forward Supplemental Channel records (as specified by NUM_PILOTS and NUM_SCH) with PILOT_INCL field set to ‘1’. The base station shall use the same order for the following field as is used for the Forward Supplemental Channel records.

CCSH_ENCODER_TYPE - Code Combining Soft Handoff Turbo Encoder type.

The base station shall set this field to ‘0’ if the Turbo Encoder type to be used on the Forward Supplemental Channel identified by FOR_SCH_ID and SCCL_INDEX is the default encoder type. The base station shall set this field to ‘1’ if the Turbo Encoder to be used is the complementary type.

RESERVED - Reserved bits.

The base station shall add reserved bits as needed in order to make the length of the ACTIVE_SET_REC_FIELDS record equal to an integer number of octets. The base station shall set these bits to ‘0’.

If the CH_IND field is set to ‘010’ or ‘110’, the base station shall include the following fields:

NUM_FOR_SCH - Number of Forward Supplemental Channel records.

If SCH_INCL is set to ‘0’, the base station shall omit this field; otherwise, the base station shall set this field as follows:

The base station shall set this field to the number of the Forward Supplemental Channel records need to be updated.

If NUM_FOR_SCH is included and not equal to ‘00000’, the base station shall include NUM_FOR_SCH occurrence of the following three fields:

FOR_SCH_ID - Forward Supplemental Channel identifier.

The base station shall set this field to identifier of the Forward Supplemental Channel.

SCCL_INDEX - Supplemental Channel Code list index.

The base station shall set this field to the index of the record in the Supplemental Channel Code list.

FOR_SCH_NUM_BITS_IDX - Forward Supplemental Channel number of information bits index.

If USE_FLEX_NUM_BITS is equal to '0' or if USE_FLEX_NUM_BITS is equal to '1' and FSCH_NBIT_TABLE_ID for FOR_SCH_ID is equal to ‘0000’, then the base station shall set this field according to Table 3.7.3.3.2.37-4 to indicate the number of information bits per frame and the length of the CRC field for the Forward Supplemental Channel identified by FOR_SCH_ID corresponding to SCCL_INDEX.

If USE_FLEX_NUM_BITS$_S$ is equal to '1' and FSCH_NBIT_TABLE_ID[FOR_SCH_ID] is not equal to ‘0000’, then the base station shall set this field to indicate that the number of information bits per frame for the Forward Supplemental channel identified by FOR_SCH_ID to be NUM_BITS[FSCH_NBIT_TABLE_ID[FOR_SCH_ID]][FOR_SCH_NUM_BITS_IDX] and the number of CRC bits per frame for the Forward Supplemental channel identified by FOR_SCH_ID to be CRC_LEN_IDX[FSCH_NBIT_TABLE_ID[FOR_SCH_ID]][FOR_SCH_NUM_BITS_IDX].

NUM_REV_SCH - Number of Reverse Supplemental Channel records.

If SCH_INCL is set to ‘0’, the base station shall omit this field; otherwise, the base station shall set this field as follows:

The base station shall set this field to the number of the Reverse Supplemental Channels need to be updated.

If NUM_REV_SCH is included and not equal to ‘00000’, the base station shall include NUM_REV_SCH occurrence of the following three fields:

REV_SCH_ID - Reverse Supplemental Channel identifier.

The base station shall set this field to the identifier of the Reverse Supplemental Channel.

REV_WALSH_ID - Reverse Supplemental Channel Walsh cover Identifier.

The base station shall set this field according to Table 3.7.3.3.2.37-1 to indicate the Walsh cover ID that the mobile station is to use when transmitting at the rate specified by REV_SCH_NUM_BITS_IDX on the Reverse Supplemental Channel specified by REV_SCH_ID. If only one reverse supplemental channel is assigned, the base station should set this field to the default value for the REV_WALSH_ID as specified in 2.6.4.2.

REV_SCH_NUM_BITS_IDX - Reverse Supplemental Channel number of bits per frame index.

If USE_FLEX_NUM_BITS is equal to '0' or if USE_FLEX_NUM_BITS is equal to '1' and RSCH_NBIT_TABLE_ID[REV_SCH_ID] is equal to ‘0000’, then the base station shall set this field according to Table 3.7.3.3.2.37-2 to indicate the Reverse Supplemental Channel number of information bits per frame and the number of CRC bits per frame, corresponding to REV_WALSH_ID field.

If USE_FLEX_NUM_BITS is equal to '1' and RSCH_NBIT_TABLE_ID[REV_SCH_ID] is not equal to ‘0000’, then the base station shall set the REV_SCH_NUM_BITS_IDX field to indicate the Reverse Supplemental Channel number of information bits per frame, corresponding to REV_WALSH_ID field to be NUM_BITS[RSCH_NBIT_TABLE_ID[REV_SCH_ID]] [REV_SCH_NUM_BITS_IDX] and the Reverse Supplemental Channel number of CRC bits per frame, corresponding to REV_WALSH_ID field to be CRC_LEN_IDX[RSCH_NBIT_TABLE_ID[REV_SCH_ID]] [REV_SCH_NUM_BITS_IDX].

NUM_PILOTS - Number of pilots included in the message.

The base station shall set this field to the number of pilots included in the message. The base station shall set this field to an integer that is equal to or greater than 1.

SRCH_OFFSET_INCL - Target pilot channel search window offset included.

If the SRCH_OFFSET field is included in the following records, the base station shall set this field to ‘1’; otherwise, the base station shall set this field to ‘0’.

The base station shall include one occurrence of the following record for each of the NUM_PILOTS pilots included in the message:

PILOT_PN - Pilot PN sequence offset index.

The base station shall set this field to the pilot PN sequence offset for this pilot in units of 64 PN chips.

SRCH_OFFSET - Target pilot channel search window offset.

If SRCH_OFFSET_INCL equals to ‘1’, then the base station shall set this field to the value shown in Table 2.6.6.2.1-2 corresponding to the search window offset to be used by the mobile station for this target pilot. Otherwise, the base station shall omit this field.

ADD_PILOT_REC_INCL - Additional pilot information included indicator.

The base station shall set this field to ‘1’ if additional pilot information listed in PILOT_REC_TYPE and RECORD_LEN fields are included. The base station shall set this field to ‘0’ if the corresponding pilot is the common pilot and there is no additional pilot information included.

PILOT_REC_TYPE - Pilot record type.

If ADD_PILOT_REC_INCL is set to '1', the base station shall set this field to the PILOT_REC_TYPE value shown in Table 3.7.2.3.2.21-9 corresponding to the type of Pilot Record specified by this record.

If ADD_PILOT_REC_INCL is set to '0', the base station shall omit this field.

RECORD_LEN - Pilot record length.

If ADD_PILOT_REC_INCL is set to '1', the base station shall set this field to the number of octets in the type-specific fields of this pilot record.

If ADD_PILOT_REC_INCL is set to '0', the base station shall omit this field.

Type-specific fields - Pilot record type-specific fields.

If ADD_PILOT_REC_INCL is set to '1', the base station shall include type-specific fields based on the PILOT_REC_TYPE of this pilot record as described in 3.7.6.1.

If ADD_PILOT_REC_INCL is set to '0', the base station shall omit this field.

PWR_COMB_IND - Power control symbol combining indicator.

If this pilot will carry the same closed-loop power control subchannel bits as that of the previous pilot in this message, the base station shall set this field to '1'; otherwise, the base station shall set this field to '0'. The base station shall set this field to '0' in the first record in the pilot list.

CODE_CHAN_DCCH - Code channel on the Dedicated Control Channel.

If a Radio Configuration associated with Spreading Rate 1 is used, the base station shall set this field to the code channel index (see [2]), in the range of 1 to 127 inclusive, that the mobile station is to use on the Dedicated Control Channel of the Forward Traffic Channel. If a Radio Configuration associated with Spreading Rate 3, the base station shall set this field to the code channel index (see [2]), in the range of 1 to 255 inclusive, that the mobile station is to use for the Dedicated Control Channel on the center SR3 frequency.

If Radio Configuration 3 or 5 (see [2]) is used, the base station shall set this field in the range 1 to 63 inclusive. If Radio Configuration 4, 6 or 8 is used, the base station shall set this field in the range 1 to 127 inclusive. If Radio Configuration 7 or 9 is used, the base station shall set this field in the range 1 to 255 inclusive.

QOF_MASK_ID_DCCH - Quasi-orthogonal function index on the Dedicated Control Channel.

If a Radio Configuration associated with Spreading Rate 1 is used, the base station shall set this field to the index of the Quasi-orthogonal function (see [2]). If a Radio Configuration associated with Spreading Rate 3 is used, the base station shall set this field to the index of the Quasi-orthogonal function (see [2]).

NUM_SCH - Number of Supplemental Channel records.

If SCH_INCL is set to '0', the base station shall omit this field; otherwise, the base station shall set this field as follows:

The base station shall set this field to the number of the Supplemental Channel records need to be updated.

If NUM_SCH is included and not equal to '00000', the base station shall include NUM_SCH occurrence of the following five fields:

FOR_SCH_ID - Forward Supplemental Channel identifier

The base station shall set this field to the identifier of the Forward Supplemental Channel pertaining to this record.

SCCL_INDEX - Supplemental Channel Code list index.

The base station shall set this field to the index of the record in the Supplemental Channel Code list.

PILOT_INCL - The corresponding pilot included in Supplemental Channel Active Set indicator.

The base station shall set this field to '1' if the corresponding pilot is included in the Active Set of Supplemental Channel; otherwise, the base station shall set this field to '0'.

CODE_CHAN_SCH - Code channel on the Supplemental Channel.

The base station shall set this field to the code channel index (see [2]) that the mobile station is to use on the Supplemental Channel of the Forward Traffic Channel indexed by SCCL_INDEX.

QOF_MASK_ID_SCH - Quasi-orthogonal function index on the Supplemental Channel.

If SCH_INCL is set to '0', the base station shall omit this field; otherwise, the base station shall set this field as follows:

The base station shall set this field to the index of the Quasi-orthogonal function (see [2]).

3X_DCCH_INFO_INCL – 3X Dedicated Control Channel information included indicator.

If the 3X Dedicated Control Channel information is included, the base station shall set this field to '1'; otherwise, the base station shall set this field to '0'.

The base station shall include NUM_PILOTS occurrences of the following record if 3X_DCCH_INFO_INCL is set to '1'. The base station shall use the same order for the following fields as is used for the PILOT_PN fields listed in this message.

3X_DCCH_LOW_INCL – DCCH code channel on the lowest SR3 frequency included indicator.

If the Dedicated Control Channel on the lowest SR3 frequencies has a different code channel than the Dedicated Control Channel on the center SR3 frequency, the base station shall set this field to '1'; otherwise, the base station shall set this field to '0'.

QOF_MASK_ID_DCCH_LOW – QOF index for the Dedicated Control Channel on the lowest SR3 frequency.

If 3X_DCCH_LOW_INCL is set to '0', the base station shall omit this field; otherwise, the base station shall set this field as follows:

The base station shall set this field to the index of the Quasi-orthogonal function (see [2]) corresponding to the QOF index for the Dedicated Control Channel on the lowest SR3 frequency.

CODE_CHAN_DCCH_LOW - Code channel for the Dedicated Control Channel on the lowest SR3 frequency.

If 3X_DCCH_LOW_INCL is set to '0', the base station shall omit this field; otherwise, the base station shall set this field as follows:

The base station shall set this field to the code channel index (see [2]) that the mobile station is to use on the Dedicated Control Channel on the lowest SR3 frequency. If Radio Configuration 6 or 8 is used, the base station shall set this field in the range 1 to 127 inclusive. If Radio Configuration 7 or 9 is used, the base station shall set this field in the range 1 to 255 inclusive.

3X_DCCH_HIGH_INCL – DCCH code channel on the highest SR3 frequency included indicator.

If the Dedicated Control Channel on the highest SR3 frequencies has a different code channel than the Dedicated Control Channel on the center SR3 frequency, the base station shall set this field to '1'; otherwise, the base station shall set this field to '0'.

QOF_MASK_ID_DCCH_HIGH – QOF index for the Dedicated Control Channel on the highest SR3 frequency.

If 3X_DCCH_HIGH_INCL is set to '0', the base station shall omit this field; otherwise, the base station shall set this field as follows:

The base station shall set this field to the index of the Quasi-orthogonal function (see [2]) corresponding to the QOF index for the Dedicated Control Channel on the highest SR3 frequency.

CODE_CHAN_DCCH_HIGH – Code channel for the Dedicated Control Channel on the highest SR3 frequency.

If 3X_DCCH_HIGH_INCL is set to ‘0’, the base station shall omit this field; otherwise, the base station shall set this field as follows:

The base station shall set this field to the code channel index (see [2]) that the mobile station is to use on the Dedicated Control Channel on the highest SR3 frequency. If Radio Configuration 6 or 8 is used, the base station shall set this field in the range 1 to 127 inclusive. If Radio Configuration 7 or 9 is used, the base station shall set this field in the range 1 to 255 inclusive.

3X_SCH_INFO_INCL – 3X Supplemental Channel information included indicator.

If SCH_INCL is set to ‘0’, the base station shall omit this field; otherwise, the base station shall set this field as follows:

If the 3X Supplemental Channel information is included, the base station shall set this field to ‘1’; otherwise, the base station shall set this field to ‘0’.

The base station shall include NUM_SCH occurrences of the following seven fields record if 3X_SCH_INFO_INCL is included and set to ‘1’.

FOR_SCH_ID - Forward Supplemental Channel identifier.

The base station shall set this field the identifier of the Forward Supplemental Channel pertaining to this record.

3X_SCH_LOW_INCL – SCH code channel on the lowest SR3 frequency included indicator.

If the Supplemental Channel on the lowest SR3 frequencies has a different code channel than the Supplemental Channel on the center SR3 frequency, the base station shall set this field to ‘1’; otherwise, the base station shall set this field to ‘0’.

QOF_MASK_ID_SCH_LOW – QOF index for the Supplemental Channel on the lowest SR3 frequency.

If 3X_SCH_LOW_INCL is set to ‘0’, the base station shall omit this field; otherwise, the base station shall set this field as follows:

The base station shall set this field to the index of the Quasi-orthogonal function (see [2]) corresponding to the QOF index for the Supplemental Channel on the lowest SR3 frequency.

CODE_CHAN_SCH_LOW - Code channel for the Supplemental Channel on the lowest SR3 frequency.

If 3X_SCH_LOW_INCL is set to ‘0’, the base station shall omit this field; otherwise, the base station shall set this field as follows:

The base station shall set this field to the code channel index (see [2]) that the mobile station is to use on the Supplemental Channel on the lowest SR3 frequency. If Radio Configuration 6 or 8 is used, the base station shall set this field in the range 1 to 127 inclusive. If Radio Configuration 7 or 9 is used, the base station shall set this field in the range 1 to 255 inclusive.

3X_SCH_HIGH_INCL – Supplemental Channel code channel on the highest SR3 frequency included indicator.

If the Supplemental Channel on the highest SR3 frequencies has a different code channel than the Supplemental Channel on the center SR3 frequency, the base station shall set this field to '1'; otherwise, the base station shall set this field to '0'.

QOF_MASK_ID_SCH_HIGH – QOF index for the Supplemental Channel on the highest SR3 frequency.

If 3X_SCH_HIGH_INCL is set to '0', the base station shall omit this field; otherwise, the base station shall set this field as follows:

The base station shall set this field to the index of the Quasi-orthogonal function (see [2]) corresponding to the QOF index for the Supplemental Channel on the highest SR3 frequency.

CODE_CHAN_SCH_HIGH – Code channel for the Supplemental Channel on the highest SR3 frequency.

If 3X_SCH_HIGH_INCL is set to '0', the base station shall omit this field; otherwise, the base station shall set this field as follows:

The base station shall set this field to the code channel index (see [2]) that the mobile station is to use on the Supplemental Channel on the highest SR3 frequency. If Radio Configuration 6 or 8 is used, the base station shall set this field in the range 1 to 127 inclusive. If Radio Configuration 7 or 9 is used, the base station shall set this field in the range 1 to 255 inclusive.

CCSH_INCLUDED - Code Combining Soft Handoff information included indicator.

The base station shall set this field to '1' if Code Combining Soft Handoff information is included in this message; otherwise, the base station shall set this field to '0'.

USE_CCSH_ENCODER_TIME - Use Code Combining Soft Handoff Turbo Encoder swapping action time indicator.

If the CCSH_INCLUDED field is set to '0', the base station shall omit this field; otherwise, the base station shall include this field and set it as follows.

If an explicit action time at which Turbo Encoder types (CCSH_ENCODER_TYPE) included in this message takes effect is specified, the base station shall set this field to '1'; otherwise, the base station shall set this field to '0'.

CCSH_ENCODER_ACTION_TIME - Code Combining Soft Handoff Turbo Encoder swapping action time.

If the USE_CCSH_ENCODER_TIME field is included and set to '1', the base station shall set this field to the System Time minus $FRAME\_OFFSET_S \times 1.25$ ms, in units of 80ms (modulo 64), at which Turbo Encoder types included in this message are to take effect; otherwise, the base station shall omit this field.

If the CCSH_INCLUDED field is set to '1', the base station shall include one occurrence of the following one field for each of the Forward Supplemental Channel records (as specified by NUM_PILOTS and NUM_SCH) with PILOT_INCL field set to '1'. The base station shall use the same order for the following field as is used for the Forward Supplemental Channel records.

CCSH_ENCODER_TYPE - Code Combining Soft Handoff Turbo Encoder type.

The base station shall set this field to '0' if the Turbo Encoder type to be used on the Forward Supplemental Channel identified by FOR_SCH_ID and SCCL_INDEX is the default encoder type. The base station shall set this field to '1' if the Turbo Encoder to be used is the complementary type.

FUNDICATED_BCMC_IND – BCMC on fundicated channel Indicator.

If the channel assignment in this message contains a Forward Fundicated Channel used for BCMC transmission, the base station shall set this field to '1'; otherwise, the base station shall set this field to '0'.

If FUNDICATED_BCMC_IND field is set to '1', the base station shall include NUM_PILOT occurrences of the following record:

FOR_CPCCH_WALSH - The Forward Common Power Control Channel Walsh code assignment.

The base station shall set this field to the Walsh code assignment for the Forward Common Power Control Channel.

FOR_CPCSCH - The Forward Common Power Control Channel Subchannel.

The base station shall set this field to the Forward Common Power Control Channel Subchannel associated with this base station.

RESERVED - Reserved bits.

The base station shall add reserved bits as needed in order to make the length of the ACTIVE_SET_REC_FIELDS record equal to an integer number of octets. The base station shall set these bits to '0'.

If the CH_IND field is set to '111', the base station shall include the following fields:

NUM_FOR_SCH - Number of Forward Supplemental Channel records.

If SCH_INCL is set to '0', the base station shall omit this field; otherwise, the base station shall set this field as follows:

The base station shall set this field to the number of the Forward Supplemental Channel records need to be updated.

If NUM_FOR_SCH is included and not equal to ‘00000’, the base station shall include NUM_FOR_SCH occurrence of the following three fields:

FOR_SCH_ID - Forward Supplemental Channel identifier.

The base station shall set this field to the identifier of the Forward Supplemental Channel.

SCCL_INDEX - Supplemental Channel Code list index.

The base station shall set this field to the index of the record in the Supplemental Channel Code list.

FOR_SCH_NUM_BITS_IDX - Forward Supplemental Channel number of information bits index.

If USE_FLEX_NUM_BITS is equal to '0' or if USE_FLEX_NUM_BITS is equal to '1' and FSCH_NBIT_TABLE_ID for FOR_SCH_ID is equal to ‘0000’, then the base station shall set this field according to Table 3.7.3.3.2.37-4 to indicate the number of information bits per frame and the length of the CRC field for the Forward Supplemental Channel identified by FOR_SCH_ID corresponding to SCCL_INDEX.

If USE_FLEX_NUM_BITS$_S$ is equal to '1' and FSCH_NBIT_TABLE_ID[FOR_SCH_ID] is not equal to ‘0000’, then the base station shall set this field to indicate that the number of information bits per frame for the Forward Supplemental channel identified by FOR_SCH_ID to be NUM_BITS[FSCH_NBIT_TABLE_ID[FOR_SCH_ID]][FOR_SCH_NUM_BITS_IDX] and the number of CRC bits per frame for the Forward Supplemental channel identified by FOR_SCH_ID to be CRC_LEN_IDX[FSCH_NBIT_TABLE_ID[FOR_SCH_ID]][FOR_SCH_NUM_BITS_IDX].

NUM_REV_SCH - Number of Reverse Supplemental Channel records.

If SCH_INCL is set to ‘0’, the base station shall omit this field; otherwise, the base station shall set this field as follows:

The base station shall set this field to the number of the Reverse Supplemental Channels need to be updated.

If NUM_REV_SCH is included and not equal to ‘00000’, the base station shall include NUM_REV_SCH occurrence of the following three fields:

REV_SCH_ID - Reverse Supplemental Channel identifier.

The base station shall set this field to the identifier of the Reverse Supplemental Channel.

REV_WALSH_ID - Reverse Supplemental Channel Walsh cover Identifier.

The base station shall set this field according to Table 3.7.3.3.2.37-1 to indicate the Walsh cover ID that the mobile station is to use when transmitting at the rate specified by REV_SCH_NUM_BITS_IDX on the Reverse Supplemental Channel specified by REV_SCH_ID. If only one reverse supplemental channel is assigned, the base station should set this field to the default value for the REV_WALSH_ID as specified in 2.6.4.2.

REV_SCH_NUM_BITS_IDX - Reverse Supplemental Channel number of bits per frame index.

If USE_FLEX_NUM_BITS is equal to '0' or if USE_FLEX_NUM_BITS is equal to '1' and RSCH_NBIT_TABLE_ID[REV_SCH_ID] is equal to ‘0000’, then the base station shall set this field according to Table 3.7.3.3.2.37-2 to indicate the Reverse Supplemental Channel number of information bits per frame and the number of CRC bits per frame, corresponding to REV_WALSH_ID field.

If USE_FLEX_NUM_BITS is equal to '1' and RSCH_NBIT_TABLE_ID[REV_SCH_ID] is not equal to ‘0000’, then the base station shall set the REV_SCH_NUM_BITS_IDX field to indicate the Reverse Supplemental Channel number of information bits per frame, corresponding to REV_WALSH_ID field to be NUM_BITS[RSCH_NBIT_TABLE_ID[REV_SCH_ID]] [REV_SCH_NUM_BITS_IDX] and the Reverse Supplemental Channel number of information bits per frame, corresponding to REV_WALSH_ID field to be to be CRC_LEN_IDX[RSCH_NBIT_TABLE_ID[REV_SCH_ID]] [REV_SCH_NUM_BITS_IDX].

NUM_PILOTS - Number of pilots included in the message.

The base station shall set this field to the number of pilots included in the message. The base station shall set this field to an integer that is equal to or greater than 1.

SRCH_OFFSET_INCL - Target pilot channel search window offset included.

If the SRCH_OFFSET field is included in the following records, the base station shall set this field to ‘1’; otherwise, the base station shall set this field to ‘0’.

The base station shall include one occurrence of the following record for each of the NUM_PILOTS pilots included in the message:

PILOT_PN - Pilot PN sequence offset index.

The base station shall set this field to the pilot PN sequence offset for this pilot in units of 64 PN chips.

SRCH_OFFSET - Target pilot channel search window offset.

If SRCH_OFFSET_INCL equals to '1', then the base station shall set this field to the value shown in Table 2.6.6.2.1-2 corresponding to the search window offset to be used by the mobile station for this target pilot. Otherwise, the base station shall omit this field.

ADD_PILOT_REC_INCL - Additional pilot information included indicator.

The base station shall set this field to '1' if additional pilot information listed in PILOT_REC_TYPE and RECORD_LEN fields are included. The base station shall set this field to '0' if the corresponding pilot is the common pilot and there is no additional pilot information included.

PILOT_REC_TYPE - Pilot record type.

If ADD_PILOT_REC_INCL is set to '1', the base station shall set this field to the PILOT_REC_TYPE value shown in Table 3.7.2.3.2.21-9 corresponding to the type of Pilot Record specified by this record.

If ADD_PILOT_REC_INCL is set to '0', the base station shall omit this field.

RECORD_LEN - Pilot record length.

If ADD_PILOT_REC_INCL is set to '1', the base station shall set this field to the number of octets in the type-specific fields of this pilot record.

If ADD_PILOT_REC_INCL is set to '0', the base station shall omit this field.

Type-specific fields - Pilot record type-specific fields.

If ADD_PILOT_REC_INCL is set to '1', the base station shall include type-specific fields based on the PILOT_REC_TYPE of this pilot record as described in 3.7.6.1.

If ADD_PILOT_REC_INCL is set to '0', the base station shall omit this field.

PWR_COMB_IND - Power control symbol combining indicator.

If this pilot will carry the same closed-loop power control subchannel bits as that of the previous pilot in this message, the base station shall set this field to '1'; otherwise, the base station shall set this field to '0'. The base station shall set this field to '0' in the first record in the pilot list.

CODE_CHAN_FCH - Code Channel on the Fundamental Channel.

If a Radio Configuration associated with Spreading Rate 1 is used, the base station shall set this field to the code channel index (see [2]) that the mobile station is to use on the Fundamental Channel of the Forward Traffic Channel. If a Radio Configuration associated with Spreading Rate 3 is used, the base station shall set this field to the code channel index that the mobile station is to use for the Fundamental Channel on the center SR3 frequency.

If Radio Configuration 1, 2, 3, or 5 (see [2]) is used, the base station shall set this field in the range 1 to 63 inclusive. If Radio Configuration 4, 6, 8, 11, or 12 is used, the base station shall set this field in the range 1 to 127 inclusive. If Radio Configuration 7 or 9 is used, the base station shall set this field in the range 1 to 255 inclusive.

QOF_MASK_ID_FCH - Quasi-orthogonal function index on the Fundamental Channel.

If a Radio Configuration associated with Spreading Rate 1 is used, the base station shall set this field to the index of the Quasi-orthogonal function (see [2]). If a Radio Configuration associated with Spreading Rate 3 is used, the base station shall set this field to the index of the Quasi-orthogonal function on the center SR3 frequency.

CODE_CHAN_DCCH - Code channel on the Dedicated Control Channel.

If a Radio Configuration associated with Spreading Rate 1 is used, the base station shall set this field to the code channel index (see [2]), in the range of 1 to 127 inclusive, that the mobile station is to use on the Dedicated Control Channel of the Forward Traffic Channel. If a Radio Configuration associated with Spreading Rate 3 is used, the base station shall set this field to the code channel index in the range of 1 to 255 inclusive, that the mobile station is to use for the Dedicated Control Channel on the center SR3 frequency.

If Radio Configuration 3 or 5 (see [2]) is used, the base station shall set this field in the range 1 to 63 inclusive. If Radio Configuration 4, 6 or 8 is used, the base station shall set this field in the range 1 to 127 inclusive. If Radio Configuration 7 or 9 is used, the base station shall set this field in the range 1 to 255 inclusive.

QOF_MASK_ID_DCCH - Quasi-orthogonal function index on the Dedicated Control Channel.

If a Radio Configuration associated with Spreading Rate 1 is used, the base station shall set this field to the index of the Quasi-orthogonal function (see [2]). If a Radio Configuration associated with Spreading Rate 1 is used, the base station shall set this field to the index of the Quasi-orthogonal function on the center SR3 frequency.

NUM_SCH - Number of Supplemental Channel records.

The base station shall set this field to the number of the Supplemental Channel records need to be updated.

If NUM_SCH is included and not equal to '00000', the base station shall include NUM_SCH occurrence of the following fields:

FOR_SCH_ID - Forward Supplemental Channel identifier.

The base station shall set this field to the identifier of the Forward Supplemental Channel pertaining to this record.

SCCL_INDEX - Supplemental Channel Code list index.

The base station shall set this field to the index of the record in the Supplemental Channel Code List Table.

PILOT_INCL - The corresponding pilot included in Supplemental Channel Active Set indicator.

The base station shall set this field to '1' if the corresponding pilot is included in the Active Set of Supplemental Channel; otherwise, the base station shall set this field to '0'.

CODE_CHAN_SCH - Code Channel on the Supplemental Channel.

If SCH_INCL is set to '0', the base station shall omit this field; otherwise, the base station shall set this field as follows:

The base station shall set this field to the code channel index (see [2]) that the mobile station is to use on the Supplemental Channel of the Forward Traffic Channel indexed by SCCL_INDEX.

QOF_MASK_ID_SCH - Quasi-orthogonal function index on the Supplemental Channel.

If SCH_INCL is set to '0', the base station shall omit this field; otherwise, the base station shall set this field as follows:

The base station shall set this field to the index of the Quasi-orthogonal function (see [2]).

3X_FCH_INFO_INCL – 3X Fundamental Channel information included indicator.

If the 3X Fundamental Channel information is included, the base station shall set this field to '1'; otherwise, the base station shall set this field to '0'.

3X_DCCH_INFO_INCL – 3X Dedicated Control Channel information included indicator.

If the 3X Dedicated Control Channel information is included, the base station shall set this field to '1'; otherwise, the base station shall set this field to '0'.

The base station shall include NUM_PILOTS occurrences of the following record if 3X_FCH_INFO_INCL or 3X_FCH_INFO_INCL is set to '1'. The base station shall use the same order for the following fields as is used for the PILOT_PN fields listed in this message.

3X_FCH_LOW_INCL – FCH code channel on the lowest SR3 frequency included indicator.

If 3X_FCH_INFO_INCL is set to '0', the base station shall set omit this field; otherwise, the base station shall set this field as follows:

If the Fundamental Channel on the lowest SR3 frequencies has a different code channel than the Fundamental Channel on the center SR3 frequency, the base station shall set this field to '1'; otherwise, the base station shall set this field to '0'.

QOF_MASK_ID_FCH_LOW – QOF index for the Fundamental Channel on the lowest SR3 frequency.

If 3X_FCH_LOW_INCL is included and set to '1', the base station shall set this field as follows; otherwise, the base station shall omit this field:

The base station shall set this field to the index of the Quasi-orthogonal function (see [2]) corresponding to the QOF index for the Fundamental Channel on the lowest SR3 frequency.

CODE_CHAN_FCH_LOW - Code channel for the Fundamental Channel on the lowest SR3 frequency.

If 3X_FCH_LOW_INCL is included and set to '1', the base station shall set this field as follows; otherwise, the base station shall omit this field:

The base station shall set this field to the code channel index (see [2]) that the mobile station is to use on the Fundamental Channel on the lowest SR3 frequency. If Radio Configuration 6 or 8 is used, the base station shall set this field in the range 1 to 127 inclusive. If Radio Configuration 7 or 9 is used, the base station shall set this field in the range 1 to 255 inclusive.

3X_FCH_HIGH_INCL – FCH code channel on the highest SR3 frequency included indicator.

If 3X_FCH_INFO_INCL is set to '0', the base station shall omit this field; otherwise, the base station shall set this field as follows:

If the Fundamental Channel on the highest SR3 frequencies has a different code channel than the Fundamental Channel on the center SR3 frequency, the base station shall set this field to '1'; otherwise, the base station shall set this field to '0'.

QOF_MASK_ID_FCH_HIGH – QOF index for the Fundamental Channel on the highest SR3 frequency.

If 3X_FCH_HIGH_INCL is included and set to '1', the base station shall set this field as follows; otherwise, the base station shall omit this field:

The base station shall set this field to the index of the Quasi-orthogonal function (see [2]) corresponding to the QOF index for the Fundamental Channel on the highest SR3 frequency.

CODE_CHAN_FCH_HIGH – Code channel for the Fundamental Channel on the highest SR3 frequency.

If 3X_FCH_HIGH_INCL is included and set to '1', the base station shall set this field as follows; otherwise, the base station shall omit this field:

The base station shall set this field to the code channel index (see [2]) that the mobile station is to use on the Fundamental Channel on the highest SR3 frequency. If Radio Configuration 6 or 8 is used, the base station shall set this field in the range 1 to 127 inclusive. If Radio Configuration 7 or 9 is used, the base station shall set this field in the range 1 to 255 inclusive.

3X_DCCH_LOW_INCL – DCCH code channel on the lowest SR3 frequency included indicator.

If 3X_DCCH_INFO_INCL is set to '0', the base station shall omit this field; otherwise, the base station shall set this field as follows:

If the Dedicated Control Channel on the lowest SR3 frequencies has a different code channel than the Dedicated Control Channel on the center SR3 frequency, the base station shall set this field to '1'; otherwise, the base station shall set this field to '0'.

QOF_MASK_ID_DCCH_LOW – QOF index for the Dedicated Control Channel on the lowest SR3 frequency.

If 3X_DCCH_LOW_INCL is included and set to '1', the base station shall set this field as follows; otherwise, the base station shall omit this field:

The base station shall set this field to the index of the Quasi-orthogonal function (see [2]) corresponding to the QOF index for the Dedicated Control Channel on the lowest SR3 frequency.

CODE_CHAN_DCCH_LOW - Code channel for the Dedicated Control Channel on the lowest SR3 frequency.

If 3X_DCCH_LOW_INCL is included and set to '1', the base station shall set this field as follows; otherwise, the base station shall omit this field:

The base station shall set this field to the code channel index (see [2]) that the mobile station is to use on the Dedicated Control Channel on the lowest SR3 frequency. If Radio Configuration 6 or 8 is used, the base station shall set this field in the range 1 to 127 inclusive. If Radio Configuration 7 or 9 is used, the base station shall set this field in the range 1 to 255 inclusive.

3X_DCCH_HIGH_INCL – DCCH code channel on the highest SR3 frequency included indicator.

If 3X_DCCH_INFO_INCL is set to '0', the base station shall omit this field; otherwise, the base station shall set this field as follows:

If the Dedicated Control Channel on the highest SR3 frequencies has a different code channel than the Dedicated Control Channel on the center SR3 frequency, the base station shall set this field to '1'; otherwise, the base station shall set this field to '0'.

QOF_MASK_ID_DCCH_HIGH – QOF index for the Dedicated Control Channel on the highest SR3 frequency.

If 3X_DCCH_HIGH_INCL is included and set to '1', the base station shall set this field as follows; otherwise, the base station shall omit this field:

The base station shall set this field to the index of the Quasi-orthogonal function (see [2]) corresponding to the QOF index for the Dedicated Control Channel on the highest SR3 frequency.

CODE_CHAN_DCCH_HIGH – Code channel for the Dedicated Control Channel on the highest SR3 frequency.

If 3X_DCCH_HIGH_INCL is included and set to '1', the base station shall set this field as follows; otherwise, the base station shall omit this field:

The base station shall set this field to the code channel index (see [2]) that the mobile station is to use on the Dedicated Control Channel on the highest SR3 frequency. If Radio Configuration 6 or 8 is used, the base station shall set this field in the range 1 to 127 inclusive. If Radio Configuration 7 or 9 is used, the base station shall set this field in the range 1 to 255 inclusive.

3X_SCH_INFO_INCL – 3X Supplemental Channel information included indicator.

If SCH_INCL is set to '0', the base station shall omit this field; otherwise, the base station shall set this field as follows:

If the 3X Supplemental Channel information is included, the base station shall set this field to '1'; otherwise, the base station shall set this field to '0'.

The base station shall include NUM_SCH occurrences of the following seven fields record if 3X_SCH_INFO_INCL is included and set to '1'.

FOR_SCH_ID - Forward Supplemental Channel identifier.

The base station shall set this field the identifier of the Forward Supplemental Channel pertaining to this record.

3X_SCH_LOW_INCL – SCH code channel on the lowest SR3 frequency included indicator.

If the Supplemental Channel on the lowest SR3 frequencies has a different code channel than the Supplemental Channel on the center SR3 frequency, the base station shall set this field to '1'; otherwise, the base station shall set this field to '0'.

QOF_MASK_ID_SCH_LOW – QOF index for the Supplemental Channel on the lowest SR3 frequency.

If 3X_SCH_LOW_INCL is set to '0', the base station shall omit this field; otherwise, the base station shall set this field as follows:

The base station shall set this field to the index of the Quasi-orthogonal function (see [2]) corresponding to the QOF index for the Supplemental Channel on the lowest SR3 frequency.

CODE_CHAN_SCH_LOW - Code channel for the Supplemental Channel on the lowest SR3 frequency.

If 3X_SCH_LOW_INCL is set to ‘0’, the base station shall omit this field; otherwise, the base station shall set this field as follows:

The base station shall set this field to the code channel index (see [2]) that the mobile station is to use on the Supplemental Channel on the lowest SR3 frequency. If Radio Configuration 6 or 8 is used, the base station shall set this field in the range 1 to 127 inclusive. If Radio Configuration 7 or 9 is used, the base station shall set this field in the range 1 to 255 inclusive.

3X_SCH_HIGH_INCL – SCH code channel on the highest SR3 frequency included indicator.

If the Supplemental Channel on the highest SR3 frequencies has a different code channel than the Supplemental Channel on the center SR3 frequency, the base station shall set this field to ‘1’; otherwise, the base station shall set this field to ‘0’.

QOF_MASK_ID_SCH_HIGH – QOF index for the Supplemental Channel on the highest SR3 frequency.

If 3X_SCH_HIGH_INCL is set to ‘0’, the base station shall omit this field; otherwise, the base station shall set this field as follows:

The base station shall set this field to the index of the Quasi-orthogonal function (see [2]) corresponding to the QOF index for the Supplemental Channel on the highest SR3 frequency.

CODE_CHAN_SCH_HIGH – Code channel for the Supplemental Channel on the highest SR3 frequency.

If 3X_SCH_HIGH_INCL is set to ‘0’, the base station shall omit this field; otherwise, the base station shall set this field as follows:

The base station shall set this field to the code channel index (see [2]) that the mobile station is to use on the Supplemental Channel on the highest SR3 frequency. If Radio Configuration 6 or 8 is used, the base station shall set this field in the range 1 to 127 inclusive. If Radio Configuration 7 or 9 is used, the base station shall set this field in the range 1 to 255 inclusive.

CCSH_INCLUDED - Code Combining Soft Handoff information included indicator.

The base station shall set this field to ‘1’ if Code Combining Soft Handoff information is included in this message; otherwise, the base station shall set this field to ‘0’.

USE_CCSH_ENCODER_TIME - Use Code Combining Soft Handoff Turbo Encoder swapping action time indicator.

If the CCSH_INCLUDED field is set to '0', the base station shall omit this field; otherwise, the base station shall include this field and set it as follows.

If an explicit action time at which Turbo Encoder types (CCSH_ENCODER_TYPE) included in this message takes effect is specified, the base station shall set this field to '1'; otherwise, the base station shall set this field to '0'.

CCSH_ENCODER_ACTION_TIME - Code Combining Soft Handoff Turbo Encoder swapping action time.

If the USE_CCSH_ENCODER_TIME field is included and set to '1', the base station shall set this field to the System Time minus $FRAME\_OFFSET_S \times 1.25$ ms, in units of 80ms (modulo 64), at which Turbo Encoder types included in this message are to take effect; otherwise, the base station shall omit this field.

If the CCSH_INCLUDED field is set to '1', the base station shall include one occurrence of the following one field for each of the Forward Supplemental Channel records (as specified by NUM_PILOTS and NUM_SCH) with PILOT_INCL field set to '1'. The base station shall use the same order for the following field as is used for the Forward Supplemental Channel records.

CCSH_ENCODER_TYPE - Code Combining Soft Handoff Turbo Encoder type.

The base station shall set this field to '0' if the Turbo Encoder type to be used on the Forward Supplemental Channel identified by FOR_SCH_ID and SCCL_INDEX is the default encoder type. The base station shall set this field to '1' if the Turbo Encoder to be used is the complementary type.

FUNDICATED_BCMC_IND – BCMC on fundicated channel Indicator.

If the channel assignment in this message contains a Forward Fundicated Channel used for BCMC transmission, the base station shall set this field to '1'; otherwise, the base station shall set this field to '0'.

REV_FCH_ASSIGNED – Reverse FCH channel assigned indicator.

If the FUNDICATED_BCMC_IND field is set to '0', the base station shall omit this field; otherwise, the base station shall include this field and set it as follows:

If the reverse FCH is assigned in this message, the base station shall set this field to '1'; otherwise, the base station shall set this field to '0'.

ADD_PLCM_FOR_FCH_INCL – Additional PLCM for forward FCH included indicator.

If the FUNDICATED_BCMC_IND field is set to '0', the base station shall omit this field; otherwise, the base station shall include this field and set it as follows:

If the additional PLCM for forward FCH is included in this message, the base station shall set this field to '1'; otherwise, the base station shall set this field to '0'.

ADD_PLCM_FOR_FCH_TYPE - The Additional Public Long Code Mask for forward FCH type indicator.

If ADD_PLCM_FOR_FCH_INCL not included or is included and is set to '0', the base station shall omit this field; otherwise, the base station shall include this field and set it as follows.

The base station shall set this field to '1' to indicate PLCM specified by the base station. The field value '0' is reserved.

ADD_PLCM_FOR_FCH_39 - The 39 LSB bits of the additional Public Long Code Mask for forward FCH.

If ADD_PLCM_FOR_FCH_TYPE field is included and is set to '1', the base station shall include this field and set it to the 39 least significant bits of the public long code mask used by the mobile station; otherwise, the base station shall omit this field.

FOR_CPCCH_INFO_INCL – CPCCH information included indicator.

If the FUNDICATED_BCMC_IND field is set to '0', the base station shall omit this field; otherwise, the base station shall include this field and set it as follows:

If the F-CPCCH information is included in this message, the base station shall set this field to '1'; otherwise, the base station shall set this field to '0'.

If FOR_CPCCH_INFO_INCL field is included and is set to '1', the base station shall include NUM_PILOT occurrences of the following record:

FOR_CPCCH_WALSH - The Forward Common Power Control Channel Walsh code assignment.

The base station shall set this field to the Walsh code assignment for the Forward Common Power Control Channel.

FOR_CPCSCH - The Forward Common Power Control Channel Subchannel.

The base station shall set this field to the Forward Common Power Control Channel Subchannel associated with this base station.

RESERVED - Reserved bits.

The base station shall add reserved bits as needed in order to make the length of the ACTIVE_SET_REC_FIELDS record equal to an integer number of octets. The base station shall set these bits to '0'.

If the CH_IND field is set to '000', the base station shall include the following fields:

EXT_CH_IND - Extended Channel Indicator.

The base station shall set this field as shown in Table2.7.1.3.2.4-11.

RESERVED - Reserved bits for octet alignment.

Reserved bits to align the octets between ACTIVE_SET-_REC_FIELDS and EXT_ACTIVE_SET_REC_FIELDS so that the latter has a length of ACTIVE_SET_REC_LEN-1 bytes.

EXT_ACTIVE_SET_REC_FIELDS - Extended Active Set record fields.

The Active Set record fields are determined by the value of EXT_CH_IND, as described below.

The EXT_ACTIVE_SET_REC_FIELDS shall be:

PDCH_CONTROL_HOLD - Packet Data Channel Control Hold mode indication.

The base station shall set this field to '1' to instruct the mobile station to transition to the Packet Data Channel Control Hold Mode.

If EXT_CH_IND signals the allocation of a F-FCH this field shall be set to '0'.

FULL_CI_FEEDBACK_IND - Full C/I feedback rate indicator.

If the mobile station is to send full C/I feedback every 1.25 ms, the base station shall set this field to '1'. If the mobile station is to transmit full C/I feedback every 20 ms, the base station shall set this field to '0'.

FOR_CPCCH_RATE - The Forward Common Power Control Channel Rate.

If EXT_CH_IND equals '01000', the base station shall include this field and shall set it as follows; otherwise, the base station shall omit this field.

The base station shall set this field to the rate of the Forward Common Power Control Channel as specified in Table 3.7.2.3.2.21-12. See [2].

FOR_CPCCH_UPDATE_RATE - Forward Common Power Control update rate.

If EXT_CH_IND equals '01000', the base station shall include this field and shall set it as follows; otherwise, the base station shall omit this field.

The base station shall set this field to the update rate of the Forward Common Power Control as specified in Table 3.7.2.3.2.21-13. See [2].

REV_CQICH_FRAME_OFFSET - Reverse Channel Quality Indicator Channel Frame Offset.

The C/I feedback reports on the Reverse Channel Quality Indicator Channel are delayed REV_CQICH_FRAME_OFFSET $\times$ 1.25 ms relative to system timing (see [2]).

The base station shall set this field to the Reverse Channel Quality Indicator Channel frame offset.

REV_CQICH_REPS - Reverse Channel Quality Indicator Channel repetition factor.

The base station shall set this field according to Table 3.7.3.3.2.49-1.

REV_ACKCH_REPS - Reverse Acknowledgment Channel repetition factor.

The base station shall set this field according to Table 3.7.3.3.2.49-2.

NUM_FOR_SCH - Number of Forward Supplemental Channel records.

If EXT_CH_IND does not signal the allocation of neither a F-FCH nor a F-DCCH, or if SCH_INCL is set to ‘0’, the base station shall omit this field; otherwise, the base station shall include this field and shall set it as follows:

The base station shall set this field to the number of Forward Supplemental Channel records that need to be updated.

If NUM_FOR_SCH is included and not equal to ‘00000’, the base station shall include NUM_FOR_SCH occurrence of the following three fields:

FOR_SCH_ID - Forward Supplemental Channel identifier.

The base station shall set this field to the identifier of the Forward Supplemental Channel.

SCCL_INDEX - Supplemental Channel Code list index.

The base station shall set this field to the index of the record in the Supplemental Channel Code list.

FOR_SCH_NUM_BITS_IDX - Forward Supplemental Channel number of information bits index.

If USE_FLEX_NUM_BITS is equal to '0' or if USE_FLEX_NUM_BITS is equal to '1' and FSCH_NBIT_TABLE_ID for FOR_SCH_ID is equal to ‘0000’, then the base station shall set this field according to Table 3.7.3.3.2.37-4 to indicate the number of information bits per frame and the length of the CRC field for the Forward Supplemental Channel identified by FOR_SCH_ID corresponding to SCCL_INDEX.

If USE_FLEX_NUM_BITS$_S$ is equal to '1' and FSCH_NBIT_TABLE_ID[FOR_SCH_ID] is not equal to ‘0000’, then the base station shall set this field to indicate that the number of information bits per frame for the Forward Supplemental channel identified by FOR_SCH_ID to be NUM_BITS[FSCH_NBIT_TABLE_ID[FOR_SCH_ID]][FOR_SCH_NUM_BITS_IDX] and the number of CRC bits per frame for the Forward Supplemental channel identified by FOR_SCH_ID to be CRC_LEN_IDX[FSCH_NBIT_TABLE_ID[FOR_SCH_ID]][FOR_SCH_NUM_BITS_IDX].

NUM_REV_SCH - Number of Reverse Supplemental Channel records.

If SCH_INCL is set to ‘0’, the base station shall omit this field; otherwise, the base station shall include this field and shall set it as follows:

The base station shall set this field to the number of the Reverse Supplemental Channels need to be updated.

If NUM_REV_SCH is included and not equal to ‘00000’, the base station shall include NUM_REV_SCH occurrence of the following three fields:

REV_SCH_ID - Reverse Supplemental Channel identifier.

The base station shall set this field to the identifier of the Reverse Supplemental Channel.

REV_WALSH_ID - Reverse Supplemental Channel Walsh cover Identifier.

The base station shall set this field according to Table 3.7.3.3.2.37-1 to indicate the Walsh cover ID that the mobile station is to use when transmitting at the rate specified by REV_SCH_NUM_BITS_IDX on the Reverse Supplemental Channel specified by REV_SCH_ID. If only one reverse supplemental channel is assigned, the base station should set this field to the default value for the REV_WALSH_ID as specified in 2.6.4.2.

REV_SCH_NUM_BITS_IDX - Reverse Supplemental Channel number of bits per frame index.

If USE_FLEX_NUM_BITS is equal to '0' or if USE_FLEX_NUM_BITS is equal to '1' and RSCH_NBIT_TABLE_ID[REV_SCH_ID] is equal to ‘0000’, then the base station shall set this field according to Table 3.7.3.3.2.37-2 to indicate the Reverse Supplemental Channel number of information bits per frame and the CRC bits per frame, corresponding to REV_WALSH_ID field.

If USE_FLEX_NUM_BITS is equal to '1' and RSCH_NBIT_TABLE_ID[REV_SCH_ID] is not equal to ‘0000’, then the base station shall set this field to indicate the Reverse Supplemental Channel number of information bits per frame, corresponding to REV_WALSH_ID field to be NUM_BITS[RSCH_NBIT_TABLE_ID[REV_SCH_ID]] [REV_SCH_NUM_BITS_IDX] and the Reverse Supplemental Channel number of CRC bits per frame corresponding to REV_WALSH_ID field to be CRC_LEN_IDX[RSCH_NBIT_TABLE_ID[REV_SCH_ID]] [REV_SCH_NUM_BITS_IDX].

NUM_PILOTS - Number of pilots included in the message.

The base station shall set this field to the number of pilots included in the message. The base station shall set this field to an integer that is equal to or greater than 1.

SRCH_OFFSET_INCL - Target pilot channel search window offset included.

If the SRCH_OFFSET field is included in the following records, the base station shall set this field to ‘1’; otherwise, the base station shall set this field to ‘0’.

PDCH_GROUP_IND_INCL - Packet Data Channel Group Indicator included flag.

The base station shall set this field to '1' if the PDCH_GROUP_IND fields are included; otherwise, the base station shall set this field to '0'.

If this field is set to '0', the mobile station is to use PWR_COMB_IND to determine whether the softer or soft reselection parameters are used when re-pointing between pilots in its Active Set (see [3]).

FOR_PDCH_PARMS_INCL - Indicator of the inclusion of Forward Packet Data Channel configuration fields.

The base station shall set this field to '1' if the Forward Packet Data Channel configuration fields are included; otherwise, the base station shall set this field to '0'.

FOR_PDCH_RLGAIN_INCL - Forward Packet Data Channel parameters related to reverse link adjustment gains included indicator.

If FOR_PDCH_PARMS_INCL is omitted, or if it is included and set to '0', the base station shall omit this field; otherwise, the base station shall include this field, and set it as follows.

The base station shall set this field to '1' if the following F-PDCH gain related fields are included in this message; otherwise, the base station shall set this field to '0'.

RLGAIN_ACKCH_PILOT - Reverse Acknowledgment Channel to pilot adjustment gain.

If FOR_PDCH_RLGAIN_INCL is omitted, or if it is included and set to '0', the base station shall omit this field; otherwise, the base station shall include this field, and set it as follows.

The base station shall set this field to the Reverse Acknowledgment Channel to pilot adjustment gain expressed as a two's complement value in units of 0.125 dB (see [2]).

RLGAIN_CQICH_PILOT - Reverse Channel Quality Indicator Channel to pilot adjustment gain.

If FOR_PDCH_RLGAIN_INCL is omitted, or if it is included and set to '0', the base station shall omit this field; otherwise, the base station shall include this field, and set it as follows.

The base station shall set this field to the Reverse Channel Quality Indicator Channel to pilot adjustment gain expressed as a two's complement value in units of 0.125 dB (see [2]).

NUM_SOFT_SWITCHING_FRAMES - Number of frames for R-CQICH soft switching.

If FOR_PDCH_PARMS_INCL is equal to '0', the base station shall omit this field; otherwise, the base station shall include this field and set it as follows:

The base station shall set this field to the duration of the cell switching period, in units of 20 ms, minus one, during which the mobile station is to transmit the cell switch sequence on the R-CQICH channel when it switches between two pilots which are in different groups.

If PDCH_GROUP_IND_INCL is set to '1', these groups are indicated by PDCH_GROUP_IND; otherwise, they are indicated by PWR_COMB_IND.

NUM_SOFTER-SWITCHING_FRAMES - Number of frames for R-CQICH softer switching.

If FOR_PDCH_PARMS_INCL is equal to '0', the base station shall omit this field; otherwise, the base station shall include this field and set it as follows:

The base station shall set this field to the duration of the cell switching period, in units of 20 ms, minus one, during which the mobile station is to transmit the cell switch sequence on the R-CQICH channel when it switches between two pilots which are in the same group.

If PDCH_GROUP_IND_INCL is set to '1', these groups are indicated by PDCH_GROUP_IND; otherwise, they are indicated by PWR_COMB_IND.

NUM_SOFT_SWITCHING_SLOTS - Number of slots per frame for R-CQICH soft switching.

If FOR_PDCH_PARMS_INCL is equal to '0', the base station shall omit this field; otherwise, the base station shall include this field and set it as follows:

The base station shall set this field to the duration of the cell switching slots within a switching frame, in units of 1.25 ms as specified in Table 3.7.2.3.2.21-10, during which the mobile station is to transmit the cell switch indication by using Walsh cover of target on the R-CQICH when it switches between two pilots which are in different groups.

If PDCH_GROUP_IND_INCL is set to '1', these groups are indicated by PDCH_GROUP_IND; otherwise, they are indicated by PWR_COMB_IND.

NUM_SOFTER_SWITCHING_SLOTS - Number of slots per frame for R-CQICH softer switching.

If FOR_PDCH_PARMS_INCL is equal to '0', the base station shall omit this field; otherwise, the base station shall include this field and set it as follows:

The base station shall set this field to the duration of the cell switching slots within a switching frame, in units of 1.25 ms as specified in Table 3.7.2.3.2.21-10, during which the mobile station is to transmit the cell switch indication by using Walsh cover of target on the R-CQICH when it switches between two pilots which are in the same group.

If PDCH_GROUP_IND_INCL is set to '1', these groups are indicated by PDCH_GROUP_IND; otherwise, they are indicated by PWR_COMB_IND.

CHM_SWITCHING_PARMS_INCL- Control Hold Mode fields included indicator.

If FOR_PDCH_PARMS_INCL is equal to ‘0’, the base station shall omit this field; otherwise, the base station shall include this field and set it as follows.

The base station shall set this field to ‘1’ if the switching parameters for Control Hold Mode are included; otherwise, the base station shall set this field to ‘0’.

NUM_SOFT_SWITCHING_FRAMES_CHM - Number of frames for R-CQICH soft switching while in Control Hold.

If CHM_SWITCHING_PARMS_INCL is omitted or equal to ‘0’, the base station shall omit this field; otherwise, the base station shall include this field and set it as follows:

The base station shall set this field to the duration of the cell switching period, in units of 20 ms, minus one, during which the mobile station, while in Control Hold, is to transmit the cell switch sequence on the R-CQICH when it switches between two pilots which are in different groups.

If PDCH_GROUP_IND_INCL is set to ‘1’, these groups are indicated by PDCH_GROUP_IND; otherwise, they are indicated by PWR_COMB_IND.

NUM_SOFTER_SWITCHING_FRAMES_CHM - Number of frames for R-CQICH softer switching while in Control Hold.

If CHM_SWITCHING_PARMS_INCL is omitted or equal to ‘0’, the base station shall omit this field; otherwise, the base station shall include this field and set it as follows:

The base station shall set this field to the duration of the cell switching period, in units of 20 ms, minus one, during which the mobile station, while in Control Hold, is to transmit the cell switch sequence on the R-CQICH when it switches between two pilots which are in the same group.

If PDCH_GROUP_IND_INCL is set to ‘1’, these groups are indicated by PDCH_GROUP_IND; otherwise, they are indicated by PWR_COMB_IND.

NUM_SOFT_SWITCHING_SLOTS_CHM - Number of slots per frame for R-CQICH soft switching while in Control Hold.

If CHM_SWITCHING_PARMS_INCL is omitted or equal to ‘0’,, the base station shall omit this field; otherwise, the base station shall include this field and set it as follows:

The base station shall set this field to the duration of the cell switching slots within a switching frame, in units of 1.25 ms as specified in Table 3.7.2.3.2.21-10, during which the mobile station, while in Control Hold, is to transmit the cell switch indication by using Walsh cover of target on the R-CQICH when it switches between two pilots which are in different groups.

If PDCH_GROUP_IND_INCL is set to ‘1’, these groups are indicated by PDCH_GROUP_IND; otherwise, they are indicated by PWR_COMB_IND.

NUM_SOFTER_SWITCHING_SLOTS_CHM - Number of slots per frame for R-CQICH softer switching while in Control Hold.

If CHM_SWITCHING_PARMS_INCL is omitted or equal to '0',, the base station shall omit this field; otherwise, the base station shall include this field and set it as follows:

The base station shall set this field to the duration of the cell switching slots within a switching frame, in units of 1.25 ms as specified in Table 3.7.2.3.2.21-10, during which the mobile station, while in Control Hold, is to transmit the cell switch indication by using Walsh cover of target on the R-CQICH when it switches between two pilots which are in the same group.

If PDCH_GROUP_IND_INCL is set to '1', these groups are indicated by PDCH_GROUP_IND; otherwise, they are indicated by PWR_COMB_IND.

PDCH_SOFT_SWITCHING_DELAY - F-PDCH Soft Switching Delay.

If FOR_PDCH_PARMS_INCL is equal to '0', the base station shall omit this field; otherwise, the base station shall include this field and set it as follows:

The base station shall set this field to the minimum interruption seen by the mobile station, in units of 10 ms, minus one, when the mobile station is to transmit the cell switch sequence on the R-CQICH when it switches between two pilots which are in different groups.

If PDCH_GROUP_IND_INCL is set to '1', these groups are indicated by PDCH_GROUP_IND; otherwise, they are indicated by PWR_COMB_IND.

PDCH_SOFTER_SWITCHING_DELAY - F-PDCH Soft Switching Delay.

If FOR_PDCH_PARMS_INCL is equal to '0', the base station shall omit this field; otherwise, the base station shall include this field and set it as follows:

The base station shall set this field to the minimum interruption seen by the mobile station, in units of 10 ms, minus one, when the mobile station is to transmit the cell switch sequence on the R-CQICH when it switches between two pilots which are in the same group.

If PDCH_GROUP_IND_INCL is set to '1', these groups are indicated by PDCH_GROUP_IND; otherwise, they are indicated by PWR_COMB_IND.

FOR_PDCH_COMMON_PARMS - Common Forward Packet Data Channel configuration fields indicator.

If FOR_PDCH_PARMS_INCL is set to '1', the base station shall include this field and set it as follows; otherwise, the base station shall omit this field.

The base station shall set this field to '1' if the following Forward Packet Data Channel configuration fields (WALSH_TABLE_ID, NUM_PDCCH, and FOR_PDCCH_WALSH) are common for all the pilots in the Active Set; otherwise, it shall be set to '0'.

WALSH_TABLE_ID - The index of the Walsh Table used.

If FOR_PDCH_COMMON_PARMS is included and set to '1', the base station shall include this field and set it as follows; otherwise, the base station shall omit this field.

The base station shall set this field to the index of the Walsh Table being used by the Packet Data Channel. (See [3]).

NUM_PDCCH - The number of Packet Data Control Channels supported.

If FOR_PDCH_COMMON_PARMS is included and set to '1', the base station shall include this field and set it as follows; otherwise, the base station shall omit this field.

The base station shall set this field to '000' if the pilot supports one Packet Data Control Channel. The base station shall set this field to '001' if the pilot supports two Packet Data Control Channels. The base station shall not set this field to any other value.

The base station shall include NUM_PDCCH+1 occurrences of the following one-field record:

FOR_PDCCH_WALSH - Forward Packet Data Control Channel Walsh code assignment.

If FOR_PDCH_COMMON_PARMS is included and set to '1', the base station shall include this field and set it as follows; otherwise, the base station shall omit this field.

The base station shall set this field to the Walsh code assignment for the Forward Packet Data Control Channel.

If NUM_PDCCH is set to '001', the Walsh code of PDCCH0 shall be included first, followed by the Walsh code for PDCCH1.

TX_DISABLED_TIMER_INCL - Transmitter disabled timer included flag.

The base station shall set this field to '1' if the following TX_DISABLED_TIMER field is included; otherwise, the base station shall set this field to '0'.

TX_DISABLED_TIMER - Transmitter disabled timer.

If TX_DISABLED_TIMER_INCL is equal to '0', the base station shall omit this field; otherwise, the base station shall include this field and set it as follows:

The base station shall set this field to the maximum time, in units of 20ms, the mobile station's transmitter can be disabled before the MAC Layer is to perform Forward Packet Data Channel initialization (see [3]).

FOR_GCH_ASSIGNED - Forward Grant Channel assignment indicator.

If EXT_CH_IND signals the allocation of a R-PDCH, the base station shall include this field and shall set it as follows; otherwise, the base station shall omit this field.

The base station shall set this field to '1' if the mobile station is to listen to grants on the Forward Grant Channel; otherwise, the base station shall set this field to '0' (see [3]).

FOR_RCCH_ASSIGNED - Forward Rate Control Channel assignment indicator.

If EXT_CH_IND signals the allocation of a R-PDCH, the base station shall include this field and shall set it as follows; otherwise, the base station shall omit this field.

The base station shall set this field to '1' if the mobile station is to follow rate control indicators on the Forward Rate Control Channel; otherwise, the base station shall set this field to '0' (see [3]).

FOR_RCCH_DRC_MODE - Forward Rate Control Channel Dedicated Rate Control Mode Indicator.

If FOR_RCCH_ASSIGNED is omitted, or if it is included and set to '0', the base station shall omit this field; otherwise, the base station shall include this field and set it as follows.

The base station shall set this field to '1' if the dedicated rate control mode is being used on the Forward Rate Control Channel; otherwise, the base station shall set this field to '0' if the common rate control mode is being used (see [3]).

FOR_RCCH_REPETITION - Forward Rate Control Subchannel repetition factor.

If FOR_RCCH_ASSIGNED is omitted, or if it is included and set to '0', the base station shall omit this field; otherwise, the base station shall include this field and set it as follows.

The base station shall set this field to the subchannel repetition factor of the Rate Control Subchannel on all pilots as specified in Table 3.7.2.3.2.21-11 (see [2]).

FOR_RCCH_UPDATE_RATE - Forward Rate Control Subchannel update rate.

If FOR_RCCH_ASSIGNED is omitted, or if it is included and set to '0', the base station shall omit this field; otherwise, the base station shall include this field and set it as follows.

The base station shall set this field to the update rate of the Rate Control Subchannel on all pilots as specified in Table 3.7.2.3.2.21-13. See [2].

FOR_ACKCH_ASSIGNED - Forward Acknowledgment Channel assignment indicator.

If EXT_CH_IND signals the allocation of a R-PDCH, the base station shall include this field and shall set it as follows; otherwise, the base station shall omit this field.

The base station shall set this field to '1' if the mobile station is to listen to acknowledgments on the Forward Acknowledgment Channel; otherwise, the base station shall set this field to '0' (see [2] and [3]).

FOR_ACKCH_MODE - Forward Acknowledgment Channel Mode.

If FOR_ACKCH_ASSIGNED is omitted, or if it is included and set to '0', the base station shall omit this field; otherwise, the base station shall include this field and set it as follows.

The base station shall set this field to the Acknowdgement Channel mode identifier that governs how the Acknowledgment channel is demodulated. See [2] and [3] for the details.

The base station shall set this field to '00' if the mobile station is to attempt the reception of the Forward Acknowledgment Channel from all members of the reduced active set of the Forward Packet Data Channel.

The base station shall set this field to '01' if the mobile station is to attempt reception of the Forward Acknowledgment Channel from all members of the reduced active set, and is to combine the acknowldegments from all sectors in the same combining indicator set.

The base station shall set this field to '10' if the mobile station is to attempt reception of the Forward Acknowledgment Channel from the serving sector only.

The base station shall set this field to '11' if the mobile station is to combine the Forward Acknowledgment Channel from all sectors in the same combining indicator set as the serving sector.

FOR_ACKCH_COMB_SEL - Forward Acknowledgment Channel Combining method selector.

If FOR_ACKCH_ASSIGNED is omitted, or if it is included and set to '0', or if FOR_ACKCH_MODE is omitted, or if it is included and set to '00' or '10', or if PDCH_GROUP_IND_INCL is set to '0', the base station shall omit this field; otherwise, it shall include it and set it as follows.

The base station shall set this field to '0' if the mobile station is to use PWR_COMB_IND as a combining indicator when receiving the Forward Acknowledgment Channel; otherwise, it shall set it to '1' if the mobile station is to use PDCH_GROUP_IND as the indicator for combining sectors.

REV_PDCH_PARMS_INCL - Reverse Packet Data Channel related parameters included indicator.

If EXT_CH_IND signals the allocation of a R-PDCH, the base station shall include this field and shall set it as follows; otherwise, the base station shall omit this field.

The base station shall set this field to '1' if the following R-PDCH parameters are included in this message; otherwise, the base station shall set this field to '0'.

REV_PDCH_RLGAIN_INCL - Reverse Packet Data Channel parameters related to reverse link adjustment gains included indicator.

If REV_PDCH_PARMS_INCL is omitted, or if it is included and set to '0', the base station shall omit this field; otherwise, the base station shall include this field, and set it as follows.

The base station shall set this field to '1' if the following R-PDCH gain related fields are included in this message; otherwise, the base station shall set this field to '0'.

RLGAIN_SPICH_PILOT - Reverse Secondary Pilot Channel to pilot adjustment gain.

If REV_PDCH_RLGAIN_INCL is omitted, or if it is included and set to '0', the base station shall omit this field; otherwise, the base station shall include this field, and set it as follows.

The base station shall set this field to the Reverse Secondary Pilot Channel to pilot adjustment gain expressed as a two's complement value in units of 0.125 dB (see [2]).

RLGAIN_REQCH_PILOT - Reverse Request Channel to pilot adjustment gain.

If REV_PDCH_RLGAIN_INCL is omitted, or if it is included and set to '0', the base station shall omit this field; otherwise, the base station shall include this field, and set it as follows.

The base station shall set this field to the Reverse Request Channel to pilot adjustment gain expressed as a two's complement value in units of 0.125 dB (see [2]).

RLGAIN_PDCCH_PILOT - Reverse Packet Data Control Channel to pilot adjustment gain.

If REV_PDCH_RLGAIN_INCL is omitted, or if it is included and set to '0', the base station shall omit this field; otherwise, the base station shall include this field, and set it as follows.

The base station shall set this field to the Reverse Packet Data Channel to pilot adjustment gain expressed as a two's complement value in units of 0.125 dB (see [2]).

REV_PDCH_PARMS_1_INCL - Reverse Packet Data Channel parameters subset included indicator.

If REV_PDCH_PARMS_INCL is omitted, or if it is included and set to '0', the base station shall omit this field; otherwise, the base station shall include this field, and set it as follows.

The base station shall set this field to '1' if the following R-PDCH parameters are included in this message; otherwise, the base station shall set this field to '0'.

REV_PDCH_TABLE_SEL - Reverse Packet Data Channel Table selector.

If REV_PDCH_PARMS_1_INCL is omitted, or if it is included and set to '0', the base station shall omit this field; otherwise, the base station shall include this field, and set it as follows.

The base station shall set this field to the Reverse Packet Data Channel Table selector (see [2]).

REV_PDCH_MAX_AUTO_TPR - Reverse Packet Data Channel maximum traffic to pilot ratio for autonomous transmission.

If REV_PDCH_PARMS_1_INCL is omitted, or if it is included and set to '0', the base station shall omit this field; otherwise, the base station shall include this field and set it as follows.

The base station shall set this field to the maximum traffic to pilot ratio for autonomous transmission on the Reverse Packet Data Channel (see [2] and [3]).

The base station shall set this field to a value in the range 0 to 18 dB inclusive in units of 0.125 dB.

The base station shall include NUM_PILOTS occurrences of the following record:

PILOT_PN - Pilot PN sequence offset index.

The base station shall set this field to the pilot PN sequence offset for this pilot in units of 64 PN chips.

SRCH_OFFSET - Target pilot channel search window offset.

If SRCH_OFFSET_INCL equals to '1', then the base station shall include this field and set it to the value shown in Table 2.6.6.2.1-2 corresponding to the search window offset to be used by the mobile station for this target pilot; otherwise, the base station shall omit this field.

ADD_PILOT_REC_INCL - Additional pilot information included indicator.

The base station shall set this field to '1' if additional pilot information listed in PILOT_REC_TYPE and RECORD_LEN fields are included. The base station shall set this field to '0' if the corresponding pilot is the common pilot and there is no additional pilot information included.

PILOT_REC_TYPE - Pilot record type.

If ADD_PILOT_REC_INCL is set to '1', the base station shall set this field to the PILOT_REC_TYPE value shown in Table 3.7.2.3.2.21-9 corresponding to the type of Pilot Record specified by this record.

If ADD_PILOT_REC_INCL is set to '0', the base station shall omit this field.

RECORD_LEN - Pilot record length.

If ADD_PILOT_REC_INCL is set to '1', the base station shall set this field to the number of octets in the type-specific fields of this pilot record.

If ADD_PILOT_REC_INCL is set to '0', the base station shall omit this field.

Type-specific fields - Pilot record type-specific fields.

If ADD_PILOT_REC_INCL is set to ‘1’, the base station shall include type-specific fields based on the PILOT_REC_TYPE of this pilot record as described in 3.7.6.1.

If ADD_PILOT_REC_INCL is set to ‘0’, the base station shall omit this field.

FOR_PDCH_INCL - Forward Packet Data Channel configuration field included indicator.

The base station shall set this field to ‘1’ if the MS is assigned resources on the PDCH channel; otherwise, the base station shall set this field to ‘0’. This field shall be set to '1' for at least one of the pilots included in this message.

WALSH_TABLE_ID - The index of the Walsh Table used.

If FOR_PDCH_INCL is set to ‘1’, and if FOR_PDCH_COMMON_PARMS is included and set to ‘0’, the base station shall include this field and set it as follows; otherwise, the base station shall omit this field.

The base station shall set this field to the index of the Walsh Table being used by the Packet Data Channel. (See [3]).

NUM_PDCCH - The number of Packet Data Control Channels supported.

If FOR_PDCH_INCL is set to ‘1’, and if FOR_PDCH_COMMON_PARMS is included and set to ‘0’, the base station shall include this field and set it as follows; otherwise, the base station shall omit this field.

The base station shall set this field to ‘000’ if the pilot supports one Packet Data Control Channel. The base station shall set this field to ‘1’ if the pilot supports two Packet Data Control Channels. The base station shall not set this field to any other value.

The base station shall include *NUM_PDCCH+1* occurrences of the following one-field record:

FOR_PDCCH_WALSH - Forward Packet Data Control Channel Walsh code assignment.

If FOR_PDCH_INCL is set to ‘1’, and if FOR_PDCH_COMMON_PARMS is included and set to ‘0’, the base station shall include this field and set it as follows; otherwise, the base station shall omit this field.

The base station shall set this field to the Walsh code assignment for the Forward Packet Data Control Channel.

If NUM_PDCCH is set to ‘001’, the Walsh code of PDCCH0 shall be included first, followed by the Walsh code for PDCCH1.

MAC_ID - Medium Access Control index.

If FOR_PDCH_INCL is set to '0', the base station shall omit this field; otherwise, the base station shall include this field and set it as follows:

The base station shall set this field to the MAC index assigned to the mobile station by this pilot.

The base station shall set this field to an integer value larger than 63.

REV_CQICH_COVER - Reverse Channel Quality Indicator Channel cover.

If FOR_PDCH_INCL is set to '0', the base station shall omit this field; otherwise, the base station shall include this field and set it as follows:

The base station shall set this field to the index of the R-CQICH cover associated with this pilot.

If this pilot is a member of the mobile station's current Active Set, the base station should assign the same value for the Walsh cover that is in the mobile station's current Active Set.

If this pilot is not a member of the mobile station's current Active Set, the base station should assign a value for the Walsh cover that was not recently assigned (See [2]).

FOR_CPCCH_WALSH - The Forward Common Power Control Channel Walsh code assignment.

If EXT_CH_IND signals the allocation of a F-CPCCH, and either of the following conditions is true:

- EXT_CH_IND signals the allocation of a F-FCH or a F-DCCH
- all of the following conditions are true:
  - FOR_PDCH_INCL is set to '1'
  - EXT_CH_IND does not signal allocation of a F-FCH
  - EXT_CH_IND does not signal allocation of a F-DCCH

the base station shall include this field and shall set it as follows; otherwise, the base station shall omit this field

The base station shall set this field to the Walsh code assignment for the Forward Common Power Control Channel.

FOR_CPCSCH - The Forward Common Power Control Channel Subchannel.

If EXT_CH_IND signals the allocation of a F-CPCCH, and either of the following conditions is true:

- EXT_CH_IND signals the allocation of a F-FCH or a F-DCCH
- all of the following conditions are true:
  - FOR_PDCH_INCL is set to '1'
  - EXT_CH_IND does not signal allocation of a F-FCH
  - EXT_CH_IND does not signal allocation of a F-DCCH

the base station shall include this field and shall set it as follows; otherwise, the base station shall omit this field

The base station shall set this field to the Forward Common Power Control Channel Subchannel associated with this base station.

If FOR_CPCCH_RATE is omitted, or if it is included and set to '00', the base station shall set this field to a value in the range 0 to 23 inclusive. If FOR_CPCCH_RATE is included and set set to '01', the base station shall set this field to a value in the range 0 to 47 inclusive. If FOR_CPCCH_RATE is included and set set to '10', the base station shall set this field to a value in the range 0 to 95 inclusive.

PWR_COMB_IND - Power control symbol combining indicator.

If the Forward Traffic Channel or Forward Common Power Control Channel associated with this pilot will carry the same closed-loop power control subchannel bits as that of the previous pilot in this message, the base station shall set this field to '1'; otherwise, the base station shall set this field to '0'. The base station shall set this field to '0' in the first record in the pilot list.

PDCH_GROUP_IND - Packet Data Channel Group Indicator.

If PDCH_GROUP_IND_INCL is set to '1', the base station shall include this field and shall set it as follows; otherwise, the base station shall omit this field.

If the mobile station is to use the softer reselection parameters when re-pointing between this pilot and the previous pilot in this message that has a F-PDCH assigned to this mobile station (i.e. FOR_PDCH_INCL is set to '1'), the base station shall set this field to '1' (See [3]).

If the mobile station is to use the soft reselection parameters when re-pointing between this pilot and the previous pilot in this message that has a F-PDCH assigned to this mobile station (i.e. FOR_PDCH_INCL is set to '1'), the base station shall set this field to '0' (See [3]).

The base station shall set this field to '0' in the first record in the pilot list that has a F-PDCH assigned to this mobile station (i.e. FOR_PDCH_INCL is set to '1').

CODE_CHAN_FCH - Code channel on the Fundamental Channel.

If EXT_CH_IND signals the allocation of a F-FCH, the base station shall include this field and shall set it as follows; otherwise it shall be omitted.

The base station shall set this field to the code channel index (see [2]) that the mobile station is to use on the Fundamental Channel of the Forward Traffic Channel.

If Radio Configuration 1, 2, 3, or 5 (see [2]) is used, the base station shall set this field in the range 1 to 63 inclusive. If Radio Configuration 4, 11, or 12 is used, the base station shall set this field in the range 1 to 127 inclusive.

QOF_MASK_ID_FCH - Quasi-orthogonal function index on the Fundamental Channel.

If EXT_CH_IND signals the allocation of a F-FCH, the base station shall include this field and shall set it as follows; otherwise it shall be omitted.

The base station shall set this field to the index of the Quasi-orthogonal function (see [2]).

CODE_CHAN_DCCH - Code channel on the Dedicated Control Channel.

If EXT_CH_IND signals the allocation of a F-DCCH, the base station shall include this field and shall set it as follows; otherwise it shall be omitted.

The base station shall set this field to the code channel index (see [2]), in the range of 1 to 127 inclusive, that the mobile station is to use on the Dedicated Control Channel of the Forward Traffic Channel.

If Radio Configuration 3 or 5 (see [2]) is used, the base station shall set this field in the range 1 to 63 inclusive. If Radio Configuration 4 is used, the base station shall set this field in the range 1 to 127 inclusive.

QOF_MASK_ID_DCCH - Quasi-orthogonal function index on the Dedicated Control Channel.

If EXT_CH_IND signals the allocation of a F-DCCH', the base station shall include this field and shall set it as follows; otherwise it shall be omitted.

The base station shall set this field to the index of the Quasi-orthogonal function (see [2]).

FOR_ACKCH_WALSH_INDEX - Walsh Code for the Forward Acknowledgment Channel.

If FOR_ACKCH_ASSIGNED is omitted, or if it is included and set to '0', or if FOR_PDCH_INCL is set to '0', or if EXT_CH_IND does not signal the allocation of a R-PDCH, the base station shall omit this field; otherwise, it shall include it and set it as follows.

The base station shall set this field to the Walsh code of the Forward Acknowledgment Channel (see [2]).

FOR_ACKSCH_INDEX - Forward Acknowledgment Subchannel Index.

If FOR_ACKCH_ASSIGNED is omitted, or if it is included and set to '0', or if FOR_PDCH_INCL is set to '0', or if EXT_CH_IND does not signal the allocation of a R-PDCH, the base station shall omit this field; otherwise, it shall include it and set it as follows.

The base station shall set this field to the subchannel index of the Forward Acknowledgment Channel (see [2]). The base station should not use FOR_ACKSCH_INDEX = 0, 1, 2, 96, 97, or 98.

FOR_RCCH_INCL - Forward Rate Control Subchannel included flag.

If FOR_PDCH_INCL is set to ‘0’, or if FOR_RCCH_ASSIGNED is omitted, or if it is included and set to ‘0’, the base station shall omit this field; otherwise, the base station shall include this field and set it as follows.

The base station shall set this field to ‘1’ if a Forward Rate Control Channel Subchannel is allocated on this pilot (see [2]); otherwise, the base station shall set this field to ‘0’.

The base station shall set this field to a non zero value for at least one pilot in this message.

FOR_RCCH_WALSH_INDEX - Walsh Code for the Forward Rate Control Channel Subchannel.

If FOR_RCCH_INCL is omitted, or if it is included and set to ‘0’, the base station shall omit this field; otherwise, the base station shall include this field and set it as follows.

The base station shall set this field to the Walsh code of the Forward Rate Control Channel Subchannel (see [2]).

FOR_RCSCH_INDEX - Forward Rate Control Subchannel.

If FOR_RCCH_INCL is omitted, or if it is included and set to ‘0’, the base station shall omit this field; otherwise, the base station shall include this field and set it as follows.

The base station shall set this field to the subchannel index of the Rate Control Subchannel on this pilot (see [2]).

If FOR_RCCH_REPETITION is set to ‘00’ this field shall take values in the range 0 to 96. If FOR_RCCH_REPETITION is set to ‘01’ this field shall take values in the range 0 to 48. If FOR_RCCH_REPETITION is set to ‘10’ this field shall take values in the range 0 to 24.

NUM_FOR_GCH - Number of Forward Grant Channels

If FOR_PDCH_INCL is set to ‘0’, or if FOR_GCH_ASSIGNED is omitted, or if it is included and set to ‘0’, the base station shall omit this field; otherwise, the base station shall include this field and set it as follows.

The base station shall set this field to the number of assigned Forward Grant Channels on this pilot. The base station shall set this field to 0, 1, or 2.

The base station shall set this field to a non zero value for at least one pilot in this message.

If FOR_PDCH_INCL is set to ‘1’, and if FOR_GCH_ASSIGNED is included and set to ‘1’, the base station shall include NUM_FOR_GCH occurrences of the field FOR_GCH_WALSH_INDEX:

FOR_GCH_WALSH_INDEX - Walsh Code for the Forward Grant Channel.

The base station shall set this field to the Walsh code of the Forward Grant Channels (see [2]).

NUM_SCH - Number of Supplemental Channel records.

If SCH_INCL is set to '0', the base station shall omit this field; otherwise, the base station shall include this field and shall set it as follows:

The base station shall set this field to the number of the Supplemental Channel records need to be updated.

If NUM_SCH is included and not equal to '00000', the base station shall include NUM_SCH occurrence of the following five fields:

FOR_SCH_ID - Forward Supplemental Channel identifier.

The base station shall set this field the identifier of the Forward Supplemental Channel pertaining to this record.

SCCL_INDEX - Supplemental Channel Code list index.

The base station shall set this field to the index of the record in the Supplemental Channel Code list.

PILOT_INCL - The corresponding pilot included in Supplemental Channel Active Set indicator.

The base station shall set this field to '1' if the corresponding pilot is included in the Active Set of Supplemental Channel; otherwise, the base station shall set this field to '0'.

CODE_CHAN_SCH - Code channel on the Supplemental Channel.

If PILOT_INCL is included and set to '1', the base station shall include this field and shall set it as follows; otherwise, the base station shall omit this field.

The base station shall set this field to the code channel index (see [2]) that the mobile station is to use on the Supplemental Channel of the Forward Traffic Channel indexed by SCCL_INDEX.

QOF_MASK_ID_SCH - Quasi-orthogonal function index on the Supplemental Channel.

If PILOT_INCL is included and set to '1', the base station shall include this field and shall set it as follows; otherwise, the base station shall omit this field.

The base station shall set this field to the index of the Quasi-orthogonal function (see [2]).

CCSH_INCLUDED - Code Combining Soft Handoff information included indicator.

The base station shall set this field to '1' if Code Combining Soft Handoff information is included in this message; otherwise, the base station shall set this field to '0'.

USE_CCSH_ENCODER_TIME - Use Code Combining Soft Handoff Turbo Encoder swapping action time indicator.

If the CCSH_INCLUDED field is set to ‘0’, the base station shall omit this field; otherwise, the base station shall include this field and set it as follows.

If an explicit action time at which Turbo Encoder types (CCSH_ENCODER_TYPE) included in this message takes effect is specified, the base station shall set this field to ‘1’; otherwise, the base station shall set this field to ‘0’.

CCSH_ENCODER_ACTION_TIME - Code Combining Soft Handoff Turbo Encoder swapping action time.

If the USE_CCSH_ENCODER_TIME field is included and set to ‘1’, the base station shall set this field to the System Time minus $FRAME\_OFFSET_S \times 1.25$ ms, in units of 80ms (modulo 64), at which Turbo Encoder types included in this message are to take effect; otherwise, the base station shall omit this field.

If the CCSH_INCLUDED field is set to ‘1’, the base station shall include one occurrence of the following one field for each of the Forward Supplemental Channel records (as specified by NUM_PILOTS and NUM_SCH) with PILOT_INCL field set to ‘1’. The base station shall use the same order for the following field as is used for the Forward Supplemental Channel records.

CCSH_ENCODER_TYPE - Code Combining Soft Handoff Turbo Encoder type.

The base station shall set this field to ‘0’ if the Turbo Encoder type to be used on the Forward Supplemental Channel identified by FOR_SCH_ID and SCCL_INDEX is the default encoder type. The base station shall set this field to ‘1’ if the Turbo Encoder to be used is the complementary type.

FUNDICATED_BCMC_IND – BCMC on fundicated channel Indicator.

If the channel assignment in this message contains a Forward Fundicated Channel used for BCMC transmission, the base station shall set this field to ‘1’; otherwise, the base station shall set this field to ‘0’.

ADD_PLCM_FOR_FCH_INCL – Additional PLCM for forward FCH included indicator.

If the FUNDICATED_BCMC_IND field is set to ‘0’, the base station shall omit this field; otherwise, the base station shall include this field and set it as follows:

If the additional PLCM for forward FCH is included in this message, the base station shall set this field to ‘1’; otherwise, the base station shall set this field to ‘0’.

ADD_PLCM_FOR_FCH_TYPE - The Additional Public Long Code Mask for forward FCH type indicator.

If ADD_PLCM_FOR_FCH_INCL not included or is included and is set to ‘0’, the base station shall omit this field; otherwise, the base station shall include this field and set it as follows.

The base station shall set this field to ‘1’ to indicate PLCM specified by the base station. The field value ‘0’ is reserved.

ADD_PLCM_FOR_FCH_39 - The 39 LSB bits of the additional Public Long Code Mask for forward FCH.

If ADD_PLCM_FOR_FCH_TYPE field is included and is set to '1', the base station shall include this field and set it to the 39 least significant bits of the public long code mask used by the mobile station; otherwise, the base station shall omit this field.

RESERVED - Reserved bits.

The base station shall add reserved bits as needed in order to make the length of the ACTIVE_SET_REC_FIELDS record equal to an integer number of octets. The base station shall set these bits to '0'.

3.7.3.3.2.37 Extended Supplemental Channel Assignment Message

MSG_TAG: ESCAM

Field	Length (bits)
START_TIME_UNIT	3
REV_SCH_DTX_DURATION	4
USE_T_ADD_ABORT	1
USE_SCRM_SEQ_NUM	1
SCRM_SEQ_NUM	0 or 4
ADD_INFO_INCL	1
FPC_PRI_CHAN	0 or 1

REV_CFG_INCLUDED	1
If REV_CFG_INCLUDED is set to '1', the base station shall include the followingrecord:	
NUM_REV_CFG_RECS	5

If REV_CFG_INCLUDED is set to '1', the base station shall include (NUM_REV_CFG_RECS +1) occurrences of the following record:

{ (NUM_REV_CFG_RECS+1)

REV_SCH_ID	1
REV_WALSH_ID	1
REV_SCH_NUM_BITS_IDX	4

} (NUM_REV_CFG_RECS+1)

NUM_REV_SCH	2

The base station shall include NUM_REV_SCH occurrences of the following record:

{ (NUM_REV_SCH)

REV_SCH_ID	1
REV_SCH_DURATION	4
REV_SCH_START_TIME_INCL	1
REV_SCH_START_TIME	0 or 5
REV_SCH_NUM_BITS_IDX	4

(continues on next page)

Field	Length (bits)

} (NUM_REV_SCH)

FOR_CFG_INCLUDED	1
FOR_SCH_FER_REP	0 or 1
If FOR_CFG_INCLUDED is set to '1', the base station shall include the following record:	
NUM_FOR_CFG_RECS	5

If FOR_CFG_INCLUDED is set to '1' , the base station shall include (NUM_FOR_CFG_RECS +1) occurrences of the following record

{ (NUM_FOR_CFG_RECS+1)

FOR_SCH_ID	1
SCCL_INDEX	4
FOR_SCH_NUM_BITS_IDX	4
NUM_SUP_SHO	3

NUM_SUP_SHO+1 occurrences of the following record:

{ (NUM_SUP_SHO+1)

PILOT_PN	9
ADD_PILOT_REC_INCL	1
ACTIVE_PILOT_REC_TYPE	0 or 3
RECORD_LEN	0 or 3
Type-specific fields	0 or 8 × RECORD_LEN
CODE_CHAN_SCH	11
QOF_MASK_ID_SCH	2

} (NUM_SUP_SHO+1)

} (NUM_FOR_CFG_RECS+1)

NUM_FOR_SCH	2

NUM_FOR_SCH occurrences of the following record:

{ (NUM_FOR_SCH)

FOR_SCH_ID	1
FOR_SCH_DURATION	4
FOR_SCH_START_TIME_INCL	1
FOR_SCH_START_TIME	0 or 5

(continues on next page)

Field	Length (bits)
SCCL_INDEX	4

} (NUM_FOR_SCH)

FPC_INCL	1
FPC_MODE_SCH	0 or 3
FPC_SCH_INIT_SETPT_OP	0 or 1
FPC_SEC_CHAN	0 or 1
NUM_SUP	0 or 2

NUM_SUP occurrences of the followingrecord:

{ (NUM_SUP)

SCH_ID	1
FPC_SCH_FER	5
FPC_SCH_INIT_SETPT	8
FPC_SCH_MIN_SETPT	8
FPC_SCH_MAX_SETPT	8

} (NUM_SUP)

FPC_THRESH_SCH_INCL	0 or 1
FPC_SETPT_THRESH_SCH	0 or 8
RPC_INCL	1
RPC_NUM_SUP	0 or 1

Include RPC_NUM_SUP +1 occurrences of the following record:

{ (RPC_NUM_SUP +1)

SCH_ID	1
RLGAIN_SCH_PILOT	6

} (RPC_NUM_SUP +1)

(continues on next page)

1

Field	Length (bits)
3X_SCH_INFO_INCL	1
NUM_3X_CFG	0 or 2

If 3X_SCH_INFO_INCL is set to '1', NUM_3X_CFG occurrences of the following record:

{ (NUM_3X_CFG)

FOR_SCH_ID	1
NUM_3X_REC	5

(NUM_3X_REC + 1) occurrences of the following record:

{ (NUM_3X_REC+ 1)

SCCL_INDEX	4

(NUM_SUP_SHO + 1) occurrences of the following record for each corresponding SCCL_INDEX field:

{ (NUM_SUP_SHO+ 1)

3X_SCH_LOW_INCL	1
QOF_MASK_ID_SCH_LOW	0 or 2
CODE_CHAN_SCH_LOW	0 or 11
3X_SCH_HIGH_INCL	1
QOF_MASK_ID_SCH_HIGH	0 or 2
CODE_CHAN_SCH_HIGH	0 or 11

} (NUM_SUP_SHO+ 1)

} (NUM_3X_REC+ 1)

} (NUM_3X_CFG)

CCSH_INCLUDED	1

(NUM_FOR_CFG_RECS + 1) × (NUM_SUP_SHO + 1) occurrences of the following field if CCSH_INCLUDED is set to '1'.

{ (NUM_FOR_CFG_RECS + 1) × (NUM_SUP_SHO + 1)

CCSH_ENCODER_TYPE	0 or 1
} (NUM_FOR_CFG_RECS + 1) × (NUM_SUP_SHO + 1)	
FOR_SCH_CC_INCL	1

If FOR_SCH_CC_INCL is set to '1', the base station shall include NUM_FOR_SCH occurrences of the following record.

{ (NUM_FOR_SCH)

(continues on next page)

Field	Length (bits)
FOR_SCH_ID	2
FOR_SCH_MUX	16
SCH_CC_Type-specific field	Variable (see 3.7.5.7.1)

} (NUM_FOR_SCH)

REV_SCH_CC_INCL	1

If REV_SCH_CC_INCL is set to '1', the base station shall include NUM_REV_SCH occurrences of the following record.

{ (NUM_REV_SCH)

REV_SCH_ID	2
REV_SCH_MUX	16
SCH_CC_Type-specific field	Variable (see 3.7.5.7.1)

} (NUM_REV_SCH)

SCH_BCMC_IND	0 or 1
ADD_PLCM_FOR_SCH_INCL	0 or 1
ADD_PLCM_FOR_SCH_TYPE	0 or 1
ADD_PLCM_FOR_SCH_35	0 or 35

NUM_FOR_SCH occurrence of the following record if SCH_BCMC_IND is included and is set to '1':

{ (NUM_FOR_SCH)

USE_ADD_PLCM_FOR_SCH	1
FSCH_OUTERCODE_INCL	1
FSCH_OUTERCODE_RATE	0 or 3
FSCH_OUTERCODE_OFFSET	0 or 6

} (NUM_FOR_SCH)

FPC_BCMC_CHAN	0 or 1

START_TIME_UNIT - Unit for start time.

The base station shall set this field to indicate the units of start time included in *Extended Supplemental Channel Assignment Message*, *Forward Supplemental Channel Assignment Mini Message*, *Reverse Supplemental Channel Assignment Mini Message*, and *Universal Handoff Direction Message*. The base station shall set this field to one less than the number of 20 ms frames that determines the START_TIME_UNIT.

REV_SCH_DTX_DURATION - Discontinuous Transmission on Reverse Supplemental Channel.

The base station shall set this field to the maximum duration of time in units of 20 ms that the mobile station is allowed to stop transmission on a Reverse Supplemental Channel within the reverse assignment duration. The base station shall set this field to '0000' if the mobile station is to stop using a Reverse Supplemental Channel once it has stopped transmitting on that Reverse Supplemental Channel. The base shall set this field to '1111' if the mobile station is allowed to resume transmission on a Reverse Supplemental Channel at any time within the reverse assignment duration.

USE_T_ADD_ABORT - Reverse use T_ADD abort indicator.

The base station shall set this field to '1' to indicate that the mobile station is to utilize the T_ADD Reverse Supplemental Channel abort feature for this reverse assignment; otherwise, the base station shall set this field to '0'.

USE_SCRM_SEQ_NUM - Use Supplemental Channel Request Message sequence number indicator.

The base station shall set this field to '1' if the SCRM_SEQ_NUM field is included in this message; otherwise, the base station shall set this field to '0'.

SCRM_SEQ_NUM - Supplemental Channel Request Message sequence number.

If USE_SCRM_SEQ_NUM is set to '1', the base station shall set this field to the sequence number corresponding to the SCRM_SEQ_NUM field in a *Supplemental Channel Request Message* to which the mobile station is to match this message; otherwise, the base station shall omit this field.

ADD_INFO_INCL - Additional information included indicator.

If the message is to contain the FPC_PRI_CHAN field, the base station shall set this field to '1'; otherwise, the base station shall set this field to '0'.

The base station shall set this field to '0' if any of the following conditions holds:

- The message does not contain any Supplemental Channel assignment.
- The mobile station is currently in the Active mode.

FPC_PRI_CHAN - Power Control Subchannel Indicator.

If the ADD_INFO_INCL field is set to ’0’, the base station shall omit this field; otherwise, the base station shall set this field as follows:

The base station shall set this field to ‘0’ if the mobile station is to perform the primary inner loop estimation on the received Forward Fundamental Channel. The base station shall set this field to ‘1’ if the mobile station is to perform the primary inner loop estimation on the received Forward Dedicated Control Channel If the F-CPCCH is assigned, the base station shall multiplex the Power Control Subchannel on the F-CPCCH; otherwise:

If this field is set to ‘0’, the base station shall multiplex the Power Control Subchannel on the Forward Fundamental Channel; otherwise, the base station shall multiplex the Power Control Subchannel on the Forward Dedicated Control Channel.

REV_CFG_INCLUDED - Reverse Supplemental Channel configuration included.

The base station shall set this field to '1' if this message contains a Reverse Supplemental Channel configuration. Otherwise, the base station shall set this field to '0'.

NUM_REV_CFG_RECS - Number of the Reverse Supplemental Channel configuration Records.

If REV_CFG_INCLUDED is set to ‘1’, the base station shall set this field to one less than the number of reverse supplemental channel configuration records consisting of the following three fields that are included in this message; otherwise, the base station shall omit this field.

The base station shall include NUM_REV_CFG_RECS+1 occurrences of the following three fields only if the REV_CFG_INCLUDED field is set to ‘1’.

REV_SCH_ID - Reverse Supplemental Channel Identifier.

The base station shall set this field to the identifier of the Reverse Supplemental Channel.

REV_WALSH_ID - Reverse Supplemental Channel Walsh cover Identifier.

The base station shall set this field according to Table 3.7.3.3.2.37-1 to indicate the Walsh cover ID that the mobile station is to use when transmitting number of bits per frame specified by REV_NUM_BITS_IDX on the Reverse Supplemental Channel specified by REV_SCH_ID. If only one reverse supplemental channel is assigned, the base station should set this field to the default value for the REV_WALSH_ID as specified in 2.6.4.2.

Table 3.7.3.3.2.37-1. REV_WALSH_ID Field

REV_WALSH_ID (binary)	Walsh Cover	
	SCH_ID = '0'	SCH_ID = '1'
0	+-	++--
1	++--	++----++

REV_SCH_NUM_BITS_IDX - Reverse Supplemental Channel number of bits per frame index.

If USE_FLEX_NUM_BITS is equal to '0' or if USE_FLEX_NUM_BITS is equal to '1' and RSCH_NBIT_TABLE_ID[REV_SCH_ID] is equal to ‘0000’, then the base station shall set this field according to Table 3.7.3.3.2.37-2 to indicate the Reverse Supplemental Channel number of information bits per frame and the number of CRC bits per frame, corresponding to REV_WALSH_ID field.

If USE_FLEX_NUM_BITS is equal to '1' and RSCH_NBIT_TABLE_ID[REV_SCH_ID] is not equal to ‘0000’, then the base station shall set this field to indicate the Reverse Supplemental Channel number of information bits per frame, corresponding to REV_WALSH_ID field to be NUM_BITS[RSCH_NBIT_TABLE_ID[REV_SCH_ID]] [REV_SCH_NUM_BITS_IDX] and the Reverse Supplemental Channel number of CRC bits per frame, corresponding to REV_WALSH_ID field to be CRC_LEN_IDX[RSCH_NBIT_TABLE_ID[REV_SCH_ID]] [REV_SCH_NUM_BITS_IDX].

Table 3.7.3.3.2.37-2. R-SCH Number of Information Bits per Frame

REV_SCH_NUM_BITS_IDX (binary)	Number of information bits per frame		Number of CRC bits per frame
	RC 3, 5	RC 4, 6	
0000	172	267	12
0001	360	552	16
0010	744	1,128	16
0011	1,512	2,280	16
0100	3,048	4,584	16
0101	6,120	Reserved	16
0110	12,264	9,192	16

REV_SCH_NUM_BITS_IDX	Number of information bits per frame		Number of CRC bits
0111	Reserved	Reserved	Reserved
1000	Reserved	20,712	16
RESERVED	All other values are reserved		

NUM_REV_SCH - Number of Reverse Supplemental Channels assigned.

The base station shall set this field to the number of Reverse Supplemental Channel assigned. The base station shall set this field to ‘00’ if the assignment of Supplemental Channel is not included.

The base station shall include NUM_REV_SCH occurrences of the following five fields (REV_SCH_ID, REV_SCH_DURATION, REV_SCH_START_TIME_INCL, REV_SCH_START_TIME, and REV_SCH_NUM_BITS_IDX).

REV_SCH_ID - Reverse Supplemental Channel Identifier.

The base station shall set this field to the identifier of the Reverse Supplemental Channel.

REV_SCH_DURATION - Duration of Reverse Supplemental Channel assignment

The base station shall set this field to '0000' to indicate that the mobile station is to stop transmitting on the Reverse Supplemental Channel specified by REV_SCH_ID at the explicit start time specified by REV_SCH_START_TIME or at the implicit start time if REV_SCH_START_TIME_INCL is set to ‘0’. The base station shall set this field to '1111' to indicate that the mobile station may transmit on the Reverse Supplemental Channel specified by REV_SCH_ID, starting at the explicit start time specified by REV_SCH_START_TIME in this message, until the start time specified by a subsequent Reverse Supplemental Channel assignment corresponding to the same Supplemental Channel (see 2.6.6.2.5.1.1). The base station shall set this field to the duration according to Table 3.7.3.3.2.37-3, starting at the start time specified by REV_SCH_START_TIME, during which the mobile station may transmit on the Reverse Supplemental Channel specified by REV_SCH_ID.

Table 3.7.3.3.2.37-3. FOR_SCH_DURATION and REV_SCH_DURATION Fields

FOR_SCH_DURATION REV_SCH_DURITION (binary)	Duration in 20 ms
0001	1
0010	2
0011	3

FOR_SCH_DURATION REV_SCH_DURITION (binary)	Duration in 20 ms
0100	4
0101	5
0110	6
0111	7
1000	8
1001	16
1010	32
1011	64
1100	96
1101	128
1110	256
1111	Infinity

REV_SCH_START_TIME_INCL - Start time included indicator.

If REV_SCH_DURATION is not equal to '0000', the base station shall set this field to '1'. If REV_SCH_DURATION is equal to '0000', the base station shall set this field as follows:

The base station shall set this field to '1' if REV_SCH_START_TIME is included in this message; otherwise, the base station shall set this field to '0'.

REV_SCH_START_TIME - Start time for Reverse Supplemental Channel assignment.

If REV_SCH_START_TIME_INCL is set to '0', the base station shall omit this field; otherwise, the base station shall set this field to the System Time, in units of time specified by START_TIME_UNIT, (modulo 32) at which the mobile station may start transmitting (if REV_SCH_DURATION is not equal to '0000') or stop transmitting (if REV_SCH_DURATION is equal to '0000') on the Reverse Supplemental Channel specified in this message. The explicit start time to start or stop transmitting on the Reverse Supplemental Channel is the time for which

$$(\lfloor t/(\text{START\_TIME\_UNIT}_S+1)\rfloor - \text{REV\_SCH\_START\_TIME}) \bmod 32 = 0,$$

where t is the System Time in units of 20 ms.

REV_SCH_NUM_BITS_IDX - Reverse Supplemental Channel number of bits per frame index.

If USE_FLEX_NUM_BITS is equal to '0' or if USE_FLEX_NUM_BITS is equal to '1' and RSCH_NBIT_TABLE_ID[REV_SCH_ID] is equal to ‘0000’, then the base station shall set this field according to Table 3.7.3.3.2.37-2 to indicate the Reverse Supplemental Channel number of information bits per frame and the number of CRC bits per frame, corresponding to REV_WALSH_ID field.

If USE_FLEX_NUM_BITS is equal to '1' and RSCH_NBIT_TABLE_ID[REV_SCH_ID] is not equal to ‘0000’, then the base station shall set this field to indicate the Reverse Supplemental Channel number of information bits per frame, corresponding to REV_WALSH_ID field to be NUM_BITS[RSCH_NBIT_TABLE_ID[REV_SCH_ID]] [REV_SCH_NUM_BITS_IDX] and the Reverse Supplemental Channel number of CRC bits per frame, corresponding to REV_WALSH_ID field to be CRC_LEN_IDX[RSCH_NBIT_TABLE_ID[REV_SCH_ID]] [REV_SCH_NUM_BITS_IDX].

FOR_CFG_INCLUDED - Forward Supplemental Channel configuration included.

The base station shall set this field to '1' if this message contains a Forward Supplemental Channel configuration. Otherwise, the base station shall set this field to '0'.

FOR_SCH_FER_REP - Forward Supplemental Channel FER report indicator.

If FOR_CFG_INCLUDED is set to ‘0’, the base station shall omit this field, otherwise, the base station shall include this field and set it as follows:

The base station shall set this field to ‘1’ if the mobile station is to report the Supplemental Channel frame counts (see 2.6.4.1.1); otherwise, the base station shall set this field to ‘0’.

NUM_FOR_CFG_RECS - Number of the Forward Supplemental Channel configuration Records.

If FOR_CFG_INCLUDED is set to ‘1’, the base station shall set this field to one less than the number of forward supplemental channel configuration records consisting of the following fields that are included in this message; otherwise, the base station shall omit this field.

The base station shall include NUM_FOR_CFG_RECS+1 occurrences of the following fields only if the FOR_CFG_INCLUDED field is set to ‘1’.

FOR_SCH_ID - Forward Supplemental Channel identifier

The base station shall set this field to the identifier of the Forward Supplemental Channel.

SCCL_INDEX - Supplemental Channel Code list index.

The base station shall set this field to the index of the record in the Supplemental Channel Code list.

FOR_SCH_NUM_BITS_IDX - Forward Supplemental Channel number of information bits index.

If USE_FLEX_NUM_BITS is equal to '0' or if USE_FLEX_NUM_BITS is equal to '1' and FSCH_NBIT_TABLE_ID for FOR_SCH_ID is equal to '0000', then the base station shall set this field according to Table 3.7.3.3.2.37-4 to indicate the number of information bits per frame and the length of the CRC field for the Forward Supplemental Channel identified by FOR_SCH_ID corresponding to SCCL_INDEX.

Table 3.7.3.3.2.37-4. F-SCH Number of Information Bits per Frame

FOR_SCH_NUM_BITS_IDX (binary)	Number of information bits per frame		Number of CRC bits per frame
	RC 3, 4, 6, 7	RC 5, 8, 9	
0000	172	267	12
0001	360	552	16
0010	744	1,128	16
0011	1,512	2,280	16
0100	3,048	4,584	16
0101	6,120	Reserved	16
0110	12,264	9,192	16
0111	Reserved	Reserved	Reserved
1000	Reserved	20,712	16
RESERVED	All other values are reserved		

If $USE\_FLEX\_NUM\_BITS_S$ is equal to '1' and FSCH_NBIT_TABLE_ID[FOR_SCH_ID] is not equal to '0000', then the base station shall set this field to indicate that the number of information bits per frame for the Forward Supplemental channel identified by FOR_SCH_ID to be NUM_BITS[FSCH_NBIT_TABLE_ID[FOR_SCH_ID]][FOR_SCH_NUM_BITS_IDX] that the number of CRC bits per frame for the Forward Supplemental channel identified by FOR_SCH_ID to be CRC_LEN_IDX[FSCH_NBIT_TABLE_ID[FOR_SCH_ID]][FOR_SCH_NUM_BITS_IDX].

NUM_SUP_SHO - Number of Forward Supplemental Channels in Soft Handoff

The base station shall set this field to the size of the Forward Supplemental Channel Active Set minus one.

The base station shall include NUM_SUP_SHO+1 occurrences of the following fields for each Forward Supplemental channel corresponding to the FOR_SCH_ID and the SCCL_INDEX whose frames may be soft-combined by the mobile station:

PILOT_PN - Pilot PN sequence offset index.

The base station shall set this field to the pilot PN sequence offset for this pilot in units of 64 PN chips.

ADD_PILOT_REC_INCL - Additional pilot information included indicator.

The base station shall set this field to '1' if additional pilot information listed in PILOT_REC_TYPE and RECORD_LEN fields are included. The base station shall set this field to '0' if the corresponding pilot is the common pilot and there is no additional pilot information included.

PILOT_REC_TYPE - Pilot record type

If ADD_PILOT_REC_INCL is set to '1', the base station shall set this field to the PILOT_REC_TYPE value shown in Table 3.7.2.3.2.21-9 corresponding to the type of Pilot Record specified by this record.

If ADD_PILOT_REC_INCL is set to '0', the base station shall omit this field.

RECORD_LEN - Pilot record length.

If ADD_PILOT_REC_INCL is set to '1', the base station shall set this field to the number of octets in the type-specific fields of this pilot record.

If ADD_PILOT_REC_INCL is set to '0', the base station shall omit this field.

Type-specific fields - Pilot record type-specific fields.

If ADD_PILOT_REC_INCL is set to '1', the base station shall include type-specific fields based on the ACTIVE_PILOT_REC_TYPE of this pilot record as described in 3.7.6.1.

If ADD_PILOT_REC_INCL is set to '0', the base station shall omit this field.

CODE_CHAN_SCH - Code channel on the Supplemental Channel.

The base station shall set this field to the code channel index (see [2]) that the mobile station is to use on the Supplemental Channel of the Forward Traffic Channel indexed by SCCL_INDEX.

QOF_MASK_ID_SCH - Quasi-orthogonal function index on the Supplemental Channel.

The base station shall set this field to the index of the Quasi-orthogonal function (see [2]).

NUM_FOR_SCH - Number of Forward Supplemental Channels assigned.

The base station shall set this field to the number of forward Supplemental Channel assigned. The base station shall set this field to '00' if the assignment of Supplemental Channel is not included.

The base station shall include NUM_FOR_SCH occurrences of the following five fields (FOR_SCH_ID, FOR_SCH_DURATION, FOR_SCH_START_TIME_INCL, FOR_SCH_START_TIME, and SCCL_INDEX).

FOR_SCH_ID - Forward Supplemental Channel identifier.

The base station shall set this field to the identifier of the Forward Supplemental Channel pertaining to this record.

FOR_SCH_DURATION - Duration of Forward Supplemental Channel assignment.

The base station shall set this field to the duration (see Table 3.7.3.3.2.37-3), starting at the start time of the message specified by FOR_SCH_START_TIME, during which the mobile station is to process the Forward Supplemental Channel.

The base station shall set this field to '0000' to indicate that the mobile station should stop processing the Forward Supplemental Channel starting at the explicit start time of the message specified by FOR_SCH_START_TIME or at the implicit start time if FOR_SCH_START_TIME_INCL is set to '0'.

The base station shall set this field to '1111' to indicate that the mobile station should process the Forward Supplemental Channel, starting at the start time of the message specified by FOR_SCH_START_TIME, until the start time specified by a subsequent Forward Supplemental Channel assignment corresponding to the same Supplemental Channel (see 2.6.6.2.5.1.1).

FOR_SCH_START_TIME_INCL - Start time included indicator.

If FOR_SCH_DURATION is not equal to '0000', the base station shall set this field to '1'. If FOR_SCH_DURATION is equal to '0000', the base station shall set this field as follows:

The base station shall set this field to '1' if FOR_SCH_START_TIME is included in this message; otherwise, the base station shall set this field to '0'.

FOR_SCH_START_TIME - Start time for Forward Supplemental Channel assignment.

If FOR_SCH_START_TIME_INCL is set to '0', the base station shall omit this field; otherwise, the base station shall set this field to the System Time, in units of time specified by START_TIME_UNIT, (modulo 32) at which the mobile station is to start processing (if FOR_SCH_DURATION is not equal to '0000') or stop processing (if FOR_SCH_DURATION is equal to '0000') the Forward Supplemental Channel specified in this message. The explicit start time to start or stop processing the Forward Supplemental Channels is the time for which

$$(\lfloor t/(\text{START\_TIME\_UNIT}+1)\rfloor - \text{FOR\_SCH\_START\_TIME}) \bmod 32 = 0,$$

where t is the System Time in units of 20 ms.

SCCL_INDEX - Supplemental Channel Code list index.

The base station shall set this field to the index of the record in the Forward Supplemental Channel Code list corresponding to the FOR_SCH_ID. The base station shall include an SCCL_INDEX whose SCH Active Set is a subset of the Active Set of the Fundamental Channel, Dedicated Control Channel, or both.

FPC_INCL - Forward Link Power Control parameter included indicator.

If the forward power control related information is included in this message, the base station shall set this field to '1'; otherwise, the base station shall set this field to '0'.

FPC_MODE_SCH - Forward Power Control operational mode indicator used during forward Supplemental Channel assignment interval.

If FPC_INCL is set to '1', the base station shall set the value to the forward power control operation mode (see [2]); otherwise, the base station shall omit this field.

FPC_SCH_INIT_SETPT_OP - Initial Supplemental Channel Outer Loop Eb/Nt setpoint option.

If FPC_INCL is set to '0', the base station shall omit this field; otherwise, the base station shall set this field as follows:

The base station shall set this field to '0' to indicate that FPC_SCH_INIT_SETPT contains the absolute value of the initial F-SCH Eb/Nt setpoint. The base station shall set this field to '1' to indicate that FPC_SCH_INIT_SETPT contains the offset value of the initial F-SCH Eb/Nt setpoint relative to the current value used in the mobile station for the channel carrying the Forward Power Control Subchannel.

FPC_SEC_CHAN - Master Supplemental channel index.

If FPC_INCL is set to '1' and FPC_MODE_SCH is set to '001', '010', '101', or '110', the base station shall set this field to the master Supplemental Channel index; otherwise, the base station shall omit this field.

NUM_SUP - Number of Supplemental Channels.

If FPC_INCL is set to '0', the base station shall omit this field; otherwise, the base station shall set this field to the total number of the Supplemental Channels.

The base station shall include NUM_SUP occurrences of the following record:

SCH_ID - Supplemental Channel index.

The base station shall set this field to the Supplemental Channel index.

FPC_SCH_FER - Supplemental Channel target Frame Error Rate.

The base station shall set this field to the target Frame Error Rate on the Supplemental Channel, as specified in Table 3.7.3.3.2.25-2.

FPC_SCH_INIT_SETPT - Initial Supplemental Channel Output Loop Eb/Nt setpoint

The base station shall set this field to initial Supplemental Channel Outer Loop Eb/Nt setpoint (absolute value or offset value as indicated by FPC_SCH_INIT_SETPT_OP) as follows:

- If FPC_SCH_INIT_SETPT_OP is set to '0', the unit is 0.125 dB;
- If FPC_SCH_INIT_SETPT_OP is set to '1', the unit is 0.125 dB and the offset is expressed as two's complement signed number.

FPC_SCH_MIN_SETPT - Minimum Supplemental Channel outer loop Eb/Nt setpoint.

The base station shall set this field to minimum Supplemental Channel Outer Loop Eb/Nt setpoint, in units of 0.125 dB.

FPC_SCH_MAX_SETPT - Maximum Supplemental Channel outer loop Eb/Nt setpoint.

The base station shall set this field to maximum Supplemental Channel Outer Loop Eb/Nt setpoint, in units of 0.125 dB.

FPC_THRESH_SCH_INCL- Supplemental Channel Setpoint Report Threshold Included Indicator.

If FPC_INCL is set to ‘0’, the base station shall omit this field; otherwise, the base station shall set this field as follows:

If Supplemental Channel setpoint report threshold is included in this message, the base station shall set this field to ‘1’; otherwise, the base station shall set this field to ‘0’.

FPC_SETPT_THRESH_SCH - Supplemental Channel Setpoint Report Threshold.

If FPC_THRESH_SCH_INCL is set to ‘1’, the base station shall set this field to the value of the Supplemental Channel setpoint threshold (in units of 0.125 dB) above which the outer loop report message will be sent by the mobile station; otherwise, the base station shall omit this field.

RPC_INCL - Reverse Power Control parameter included indicator.

The base station shall set this field to ‘1’ if RPC_NUM_SUP is included in this message; otherwise the base station shall set this field to ‘0’.

RPC_NUM_SUP - Number of Supplemental Channels.

If RPC_INCL is set to ‘1’, the base station shall set this field to the total number of the Supplemental Channels minus one; otherwise, the base station shall omit this field.

The base station shall include RPC_NUM_SUP +1 occurrences of the following record:

SCH_ID - Supplemental Channel index.

The base station shall set this field to the Supplemental Channel index.

RLGAIN_SCH_PILOT - Supplemental Channel power offset adjustment relative to Reverse Pilot Channel power for radio configurations greater than 2.

The base station shall set this field to the correction factor to be used by mobile stations setting the power of a Supplemental Channel, expressed as a two's complement value in units of 0.125 dB.

3X_SCH_INFO_INCL – 3X Supplemental Channel information included indicator.

If the 3X Supplemental Channel information is included, the base station shall set this field to '1'; otherwise, the base station shall set this field to '0'.

If FOR_CFG_INCLUDED is set to '0', the base station shall set this field to '0'.

NUM_3X_CFG – Number of 3X Supplemental Channels to be configured

If 3X_SCH_INFO_INCL is set to '0', the base station shall omit this field; otherwise, the base station shall set this field as follows:

The base station shall set this field to the number of 3X Forward Supplemental Channels to be configured. The base station shall set this field to '00' if the configuration of Supplemental Channel is not included.

The base station shall include NUM_3X_CFG occurrences of the following record if 3X_SCH_INFO_INCL is included and set to '1'.

FOR_SCH_ID - Forward Supplemental Channel identifier.

The base station shall set this field the identifier of the Forward Supplemental Channel pertaining to this record.

NUM_3X_REC - Number of 3X records

The base station shall set this field to the number of instances of the following record minus one included in this message.

The base station shall include NUM_3X_REC+1 occurrences of the following variable-length record.

SCCL_INDEX - Supplemental Channel Code list index.

The base station shall set this field to the index of the record in the Supplemental Channel Code list.

The base station shall include NUM_SUP_SHO+1 occurrences of the following fields for each Forward Supplemental channel corresponding to the FOR_SCH_ID and the SCCL_INDEX whose frames may be soft-combined by the mobile station:

3X_SCH_LOW_INCL – SCH code channel on the lowest SR3 frequency included indicator.

If the Supplemental Channel on the lowest SR3 frequencies has a different code channel than the Supplemental Channel on the center SR3 frequency, the base station shall set this field to '1'; otherwise, the base station shall set this field to '0'.

QOF_MASK_ID_SCH_LOW – QOF index for the Supplemental Channel on the lowest SR3 frequency.

If 3X_SCH_LOW_INCL is set to ‘0’, the base station shall omit this field; otherwise, the base station shall set this field as follows:

The base station shall set this field to the index of the Quasi-orthogonal function (see [2]) corresponding to the QOF index for the Supplemental Channel on the lowest SR3 frequency.

CODE_CHAN_SCH_LOW - Code channel for the Supplemental Channel on the lowest SR3 frequency.

If 3X_SCH_LOW_INCL is set to ‘0’, the base station shall omit this field; otherwise, the base station shall set this field as follows:

The base station shall set this field to the code channel index (see [2]) that the mobile station is to use on the Supplemental Channel on the lowest SR3 frequency. If Radio Configuration 6 or 8 is used, the base station shall set this field in the range 1 to 127 inclusive. If Radio Configuration 7 or 9 is used, the base station shall set this field in the range 1 to 255 inclusive.

3X_SCH_HIGH_INCL – SCH code channel on the highest SR3 frequency included indicator.

If the Supplemental Channel on the highest SR3 frequencies has a different code channel than the Supplemental Channel on the center SR3 frequency, the base station shall set this field to ‘1’; otherwise, the base station shall set this field to ‘0’.

QOF_MASK_ID_SCH_HIGH – QOF index for the Supplemental Channel on the highest SR3 frequency.

If 3X_SCH_HIGH_INCL is set to ‘0’, the base station shall omit this field; otherwise, the base station shall set this field as follows:

The base station shall set this field to the index of the Quasi-orthogonal function (see [2]) corresponding to the QOF index for the Supplemental Channel on the highest SR3 frequency.

CODE_CHAN_SCH_HIGH – Code channel for the Supplemental Channel on the highest SR3 frequency.

If 3X_SCH_HIGH_INCL is set to ‘0’, the base station shall omit this field; otherwise, the base station shall set this field as follows:

The base station shall set this field to the code channel index (see [2]) that the mobile station is to use on the Supplemental Channel on the highest SR3 frequency. If Radio Configuration 6 or 8 is used, the base station shall set this field in the range 1 to 127 inclusive. If Radio Configuration 7 or 9 is used, the base station shall set this field in the range 1 to 255 inclusive.

CCSH_INCLUDED - Code Combining Soft Handoff information included indicator.

The base station shall set this field to '1' if Code Combining Soft Handoff information is included in this message; otherwise, the base station shall set this field to '0'.

If the CCSH_INCLUDED field is set to '1', the base station shall include one occurrence of the following one field for each of the Forward Supplemental Channel records included in this message (as specified by NUM_FOR_CFG_RECS and NUM_SUP_SHO). The base station shall use the same order for the following field as is used for the Forward Supplemental Channel records.

CCSH_ENCODER_TYPE - Code Combining Soft Handoff Turbo Encoder type.

The base station shall set this field to '0' if the Turbo Encoder type to be used on the Forward Supplemental Channel indexed by FOR_SCH_ID and SCCL_INDEX is the default encoder type. The base station shall set this field to '1' if the Turbo Encoder to be used is the complementary type.

FOR_SCH_CC_INCL - Channel configuration for the Forward Supplemental Channel included indicator.

The base station shall set this field to '1' if the channel configuration information for the Forward Supplemental Channel is included; otherwise, the base station shall set this field to '0'.

The base station shall set FOR_SCH_CC_INCL to '0' if NUM_FOR_SCH is set to '00' or if FOR_SCH_DURATION is set to '0000'.

If FOR_SCH_CC_INCL is set to '1', the base station shall include NUM_FOR_SCH occurrences of the following three-field record.

FOR_SCH_ID - Forward Supplemental Channel Identifier.

The base station shall set this field to the identifier of the Forward Supplemental Channel pertaining to this record.

The base station shall set this field to the Supplemental Channel identifier, shown in Table 3.7.5.7-5.

FOR_SCH_MUX - Forward Supplemental Channel Multiplex Option.

The base station shall set this field to the Multiplex Option associated with the maximum data rate for this Forward Supplemental Channel (see [3]).

SCH_CC_Type-specific field - Supplemental Channel Configuration Information.

The base station shall set this field as defined in 3.7.5.7.1 for this Forward Supplemental Channel.

REV_SCH_CC_INCL - Channel configuration for the Reverse Supplemental Channel included indicator.

The base station shall set this field to '1' if the channel configuration information for the Reverse Supplemental Channel is included; otherwise, the base station shall set this field to '0'.

The base station shall set REV_SCH_CC_INCL to ‘0’ if NUM_REV_SCH is set to ‘00’ or if REV_SCH_DURATION is set to ‘0000’.

If REV_SCH_CC_INCL is set to ‘1’, the base station shall include NUM_REV_SCH occurrences of the following three-field record.

REV_SCH_ID - Reverse Supplemental Channel Identifier.

The base station shall set this field to the identifier of the Reverse Supplemental Channel pertaining to this record.

The base station shall set this field to the Supplemental Channel identifier, shown in Table 3.7.5.7-5.

REV_SCH_MUX - Reverse Supplemental Channel Multiplex Option.

The base station shall set this field to the Multiplex Option associated with the maximum data rate for this Reverse Supplemental Channel (see [3]).

SCH_CC_Type-specific field - Supplemental Channel Configuration Information.

The base station shall set this field as defined in 3.7.5.7.1 for this Reverse Supplemental Channel

SCH_BCMC_IND – BCMC on supplemental channel Indicator.

If NUM_FOR_SCH field is set to ‘00’, the base station shall omit this field; otherwise, the base station shall include this field and set it as follows:

If the channel assignment in this message contains a Forward Supplemental Channel used for BCMC transmission, the base station shall set this field to ‘1’; otherwise, the base station shall set this field to ‘0’.

ADD_PLCM_FOR_SCH_INCL – Additional PLCM for forward SCH included indicator.

If the SCH_BCMC_IND field is not included or is included and is set to ‘0’, the base station shall omit this field; otherwise, the base station shall include this field and set it as follows:

If the additional PLCM for forward SCH is included in this message, the base station shall set this field to ‘1’; otherwise, the base station shall set this field to ‘0’.

ADD_PLCM_FOR_SCH_TYPE - The Additional Public Long Code Mask for forward SCH type indicator.

If ADD_PLCM_FOR_SCH_INCL is not included or is included and is set to ‘0’, the base station shall omit this field; otherwise, the base station shall include this field and set it as follows:

The base station shall set this field to ‘1’ to indicate PLCM specified by the base station. The field value ‘0’ is reserved.

ADD_PLCM_FOR_SCH_35 - The 35 LSB bits of the additional Public Long Code Mask for forward SCH.

If ADD_PLCM_FOR_SCH_TYPE field is included and is set to ‘1’, the base station shall include this field and set it to the 35 least significant bits of the public long code mask used by the mobile station; otherwise, the base station shall omit this field.

If SCH_BCMC_IND field is included and is set to ‘1’, the base station shall include NUM_FOR_SCH occurrences of the following record:

USE_ADD_PLCM_FOR_SCH - Use additional PLCM for forward SCH indicator.

The base station shall set this field to ‘1’ if the additional PLCM for forward SCH included in this message is to be used for this Forward Supplemental Channel; otherwise, the base station shall set this field to ‘0’.

FSCH_OUTERCODE_INCL - Forward Supplemental Channel Outer Code included indicator.

The base station shall set this field to ‘1’ if the Forward Supplemental Channel outer code information is included in this message; otherwise, the base station shall set this field to ‘0’.

FSCH_OUTERCODE_RATE - Outer Code Rate of the Forward Supplemental Channel.

If the FSCH_OUTERCODE_INCL field is not included or is included and is set to ‘0’, the base station shall omit this field; otherwise, the base station shall include this field and set it as follows:

The base station shall set this field to the outer code rate of the Forward Supplemental Channel as specified in Table 3.7.2.3.2.38-3.

FSCH_OUTERCODE_OFFSET - Outer Coding Buffer Offset of the Forward Supplemental Channel.

If the FSCH_OUTERCODE_INCL field is not included or is included and is set to ‘0’, the base station shall omit this field; otherwise, the base station shall include this field and set it as follows:

The base station shall set this field to the outer coding buffer offset of the Forward Supplemental Channel in units of 20ms as specified in [2].

FPC_BCMC_CHAN - Channel used for secondary power control subchannel.

If FPC_INCL is set to '1' and FPC_MODE_SCH is set to '001', '010', ‘101’, or ‘110’, the base station shall include this field and set it as follows; otherwise, the base station shall omit this field.

If F-FCH is associated with secondary power control subchannel, the base station shall set this field to ‘1’; otherwise, base station shall set this field to ‘0’ to indicate that FPC_SEC_CHAN points to the channel associated with secondary power control subchannel.

3.7.3.3.2.38 Forward Supplemental Channel Assignment Mini Message

MSG_TAG: FSCAMM

Field	Length (bits)
FOR_SCH_ID	1
FOR_SCH_DURATION	4
FOR_SCH_START_TIME	5
SCCL_INDEX	4

FOR_SCH_ID - Forward Supplemental Channel identifier.

The base station shall set this field to the identifier of the Forward Supplemental Channel.

FOR_SCH_DURATION - Duration of Forward Supplemental Channel assignment.

The base station shall set this field to the duration (see Table 3.7.3.3.2.37-3), starting at the start time of the message specified by FOR_SCH_START_TIME, during which the mobile station is to process the Forward Supplemental Channel.

The base station shall set this field to '0000' to indicate that the mobile station should stop processing the Forward Supplemental Channel starting at the start time of the message specified by FOR_SCH_START_TIME.

The base station shall set this field to '1111' to indicate that the mobile station should process the Forward Supplemental Channel, starting at the explicit start time of the message specified by FOR_SCH_START_TIME, until the start time of a subsequent Forward Supplemental Channel assignment corresponding to the same Forward Supplemental Channel (see 2.6.6.2.5.1.1).

FOR_SCH_START_TIME - Start time for Forward Supplemental Channel assignment.

The base station shall set this field to the System Time, in units of time specified by START_TIME_UNIT, (modulo 32) at which the mobile station is to start processing the Forward Supplemental Channel specified in this message. The start time for processing Forward Supplemental Channels is the time for which

$$(\lfloor t/(\text{START\_TIME\_UNIT}+1)\rfloor - \text{FOR\_SCH\_START\_TIME}) \bmod 32 = 0,$$

where t is the System Time in units of 20 ms.

SCCL_INDEX - Supplemental Channel Code list index.

The base station shall set this field to the index of the record in the Forward Supplemental Channel Code list corresponding to the FOR_SCH_ID. The base station shall include an SCCL_INDEX whose SCH Active Set is a subset of the Active Set of the Fundamental Channel, Dedicated Control Channel, or both.

3.7.3.3.2.39 Reverse Supplemental Channel Assignment Mini Message

MSG_TAG: RSCAMM

Field	Length (bits)
REV_SCH_ID	1
REV_SCH_DURATION	4
REV_SCH_START_TIME	5
REV_SCH_NUM_BITS_IDX	4

REV_SCH_ID - Reverse Supplemental Channel identifier.

The base station shall set this field to the identifier of the Reverse Supplemental Channel.

REV_SCH_DURATION - Duration of Reverse Supplemental Channel assignment.

The base station shall set this field to '0000' to indicate that the mobile station is to stop transmitting on the Reverse Supplemental Channel specified by REV_SCH_ID at the start time specified by START_TIME. The base station shall set this field to '1111' to indicate that the mobile station may transmit on the Reverse Supplemental Channel specified by REV_SCH_ID, starting at the start time specified by REV_SCH_START_TIME in this message, until the start time specified by a subsequent Reverse Supplemental Channel assignment corresponding to the same Supplemental Channel (see 2.6.6.2.5.1.1). The base station shall set this field to the duration according to Table 3.7.3.3.2.37-3, starting at the explicit start time specified by REV_SCH_START_TIME, during which the mobile station may transmit on the Reverse Supplemental Channel specified by REV_SCH_ID.

REV_SCH_START_TIME - Start time for *Reverse Supplemental Channel Assignment Mini Message*.

The base station shall set this field to the System Time, in units of time specified by START_TIME_UNIT, (modulo 32) at which the mobile station may start transmitting on the Reverse Supplemental Channel specified in this message. The explicit start time for transmitting on the Reverse Supplemental Channel is the time for which

$$(\lfloor t/(\text{START\_TIME\_UNIT}+1)\rfloor - \text{REV\_SCH\_START\_TIME}) \bmod 32 = 0,$$

where t is the System Time in units of 20 ms.

REV_SCH_NUM_BITS_IDX - Reverse Supplemental Channel number of information bits per frame index.

If USE_FLEX_NUM_BITS is equal to '0' or if USE_FLEX_NUM_BITS is equal to '1' and RSCH_NBIT_TABLE_ID[REV_SCH_ID] is equal to ‘0000’, then the base station shall set this field according to Table 3.7.3.3.2.37-2 to indicate the Reverse Supplemental Channel number of information bits per frame and the number of CRC bits per frame, that the mobile station may transmit on the reverse Supplemental Channel identified by REV_SCH_ID.

If $\text{USE\_FLEX\_NUM\_BITS}_S$ is equal to '1' and RSCH_NBIT_TABLE_ID[REV_SCH_ID] is not equal to ‘0000’, then the base station shall set the REV_SCH_NUM_BITS_IDX field to indicate the Reverse Supplemental Channel number of

information bits per frame that the mobile station may transmit on the Reverse Supplemental Channel identified by REV_SCH_ID to be NUM_BITS[RSCH_NBIT_TABLE_ID[REV_SCH_ID]] [REV_SCH_NUM_BITS_IDX] and the Reverse Supplemental Channel number of CRC bits per frame that the mobile station may transmit on the Reverse Supplemental Channel identified by REV_SCH_ID to be CRC_LEN_IDX[RSCH_NBIT_TABLE_ID[REV_SCH_ID]] [REV_SCH_NUM_BITS_IDX.

3.7.3.3.2.40 Mobile Assisted Burst Operation Parameters Message

MSG_TAG: MABOPM

Field	Length (bits)
ORDER_FLAG	1

If ORDER_FLAG is set to '1', the base station shall include following record:

PS_MIN_DELTA	3
ORDER_INTERVAL	3

PERIODIC_FLAG	1

If PERIODIC_FLAG is set to '1', the base station shall include following record:

NUM_PILOTS	3
PERIODIC_INTERVAL	6

THRESHOLD_FLAG	1

If THRESHOLD_FLAG is set to '1', the base station shall include following record:

PS_FLOOR_HIGH	6
PS_FLOOR_LOW	6
PS_CEILING_HIGH	6
PS_CEILING_LOW	6
THRESHOLD_INTERVAL	6

ORDER_FLAG - Order change reporting flag.

The base station shall set this field to '1' to indicate that the mobile station is to send a *Pilot Strength Measurement Mini Message* to the base station whenever a received pilot strength measurement changes its relative order with respect to all other reported pilot strength measurements during supplemental channel burst operations; otherwise, the base station shall set this field to '0'.

If ORDER_FLAG is set to '1', the base stations shall include the following two-field record:

PS_MIN_DELTA - Minimum power strength delta.

The base station shall set this field to one less than the minimum pilot strength measurement difference between two pilots (in units of 0.5 dB) that must be measured in order for the mobile station to send a *Pilot Strength Measurement Mini Messages* when the rank order mode is enabled. A difference in pilot strength of at least (PS_MIN_DELTA + 1), in units of 0.5 dB, must be measured for ORDER_INTERVAL successive 20 ms intervals before a rank order based *Pilot Strength Measurement Mini Message* is generated.

ORDER_INTERVAL - Order interval.

The base station shall set this field to the minimum interval (in 20 ms units) during which the indicated pilot strength measurement difference greater than or equal to (PS_MIN_DELTA + 1), in units of 0.5 dB, must be measured by the mobile station in order for the mobile station to send a *Pilot Strength Measurement Mini Messages* when the rank order mode is enabled.

PERIODIC_FLAG - Periodic report flag.

The base station shall set this field to '1' to indicate that the mobile station is to send *Pilot Strength Measurement Mini Messages* periodically during supplemental channel burst operations; otherwise the base station shall set this field to '0'.

If PERIODIC_FLAG is set to '1', the base station shall include the following two-field record:

NUM_PILOTS - Number of pilots.

The base station shall set this field to the number of pilots for which the mobile station is to send *Pilot Strength Measurement Mini Messages* when the periodic mode is enabled.

PERIODIC_INTERVAL - Periodic interval.

The base station shall set this field to the interval (in 20 ms units) between *Pilot Strength Measurement Mini Messages* when the periodic mode is enabled.

THRESHOLD_FLAG - Threshold reporting flag.

The base station shall set this field to '1' to indicate that the mobile station is to send *Pilot Strength Measurement Mini Messages* whenever a measured pilot crosses below a lower bound or exceeds an upper bound during Supplemental channel burst operations; otherwise the base station shall set this field to '0'.

If THRESHOLD_FLAG is set to '1', the base station shall include the following five-field record:

PS_FLOOR_HIGH - Lower bound reporting high water mark.

The base station shall set this field to the high water mark for the lower bound below which the mobile station is to send *Pilot Strength Measurement Mini Messages* when the threshold mode is enabled.

The base station shall set this field as an unsigned binary number equal to $\lfloor -2 \times 10 \times \log_{10} E_c/I_0 \rfloor$.

PS_FLOOR_LOW - Lower bound reporting low water mark.

The base station shall set this field to the low water mark for the lower bound below which the mobile station is to send *Pilot Strength Measurement Mini Messages* when the threshold mode is enabled.

The base station shall set this field as an unsigned binary number equal to $\lfloor -2 \times 10 \times \log_{10} E_c/I_0 \rfloor$.

PS_CEILING_HIGH - Upper bound reporting high water mark.

The base station shall set this field to the high water mark for the upper bound above which the mobile station is to send *Pilot Strength Measurement Mini Messages* when the threshold mode is enabled.

The base station shall set this field as an unsigned binary number equal to $\lfloor -2 \times 10 \times \log_{10} E_c/I_0 \rfloor$.

PS_CEILING_LOW - Upper bound reporting low water mark.

The base station shall set this field to the low water mark for the upper bound above which the mobile station is to send *Pilot Strength Measurement Mini Messages* when the threshold mode is enabled.

The base station shall set this field as an unsigned binary number equal to $\lfloor -2 \times 10 \times \log_{10} E_c/I_0 \rfloor$.

THRESHOLD_INTERVAL - Threshold reporting interval.

The base station shall set this field to the interval (in 20 ms units) between *Pilot Strength Measurement Mini Messages* when the threshold reporting mode is enabled.

3.7.3.3.2.41 User Zone Reject Message

MSG_TAG: UZRM

Field	Length (bits)
REJECT_UZID	16
REJECT_ACTION_INDI	3
UZID_ASSIGN_INCL	1
ASSIGN_UZID	0 or 16

REJECT_UZID - Rejected User Zone identifier.

The base station shall set this field to the User Zone identifier of the User Zone rejected by the base station.

REJECT_ACTION_INDI - Rejection action indicator.

The base station shall set this field to the value shown in Table 3.7.2.3.2.29-1 corresponding to the User Zone rejection action field to identify the mobile station action.

UZID_ASSIGN_INCL - User Zone identifier assignment included indicator.

If assigned UZID information is included, the base station shall set this field to '1'; otherwise, the base station shall set this field to '0'.

ASSIGN_UZID - Assigned User Zone identifiers.

The base station shall set this field to the User Zone identifier of the User Zone assigned to the mobile station.

3.7.3.3.2.42 User Zone Update Message

MSG_TAG: UZUM

Specific Field	Length (bits)
UZID	16

UZID - User Zone identifier.

The base station shall set this field to the User Zone identifier supported by the base station.

3.7.3.3.2.43 Call Assignment Message

MSG_TAG: CLAM

Field	Length (bits)
RESPONSE_IND	1
TAG	0 or 4
ACCEPT_IND	0 or 1
REJECT_PKTDATA_IND	0 or 1
BYPASS_ALERT_ANSWER	0 or 1
SO_INCL	1
SO	0 or 16
CON_REF_INCL	1
CON_REF	0 or 8
USE_OLD_SERV_CONFIG	0 or 1
SR_ID	0 or 3
SR_ID_RESTORE_BITMAP	0 or 6
ADD_CALL_INFO_INCLUDED	0 or 1
NUM_ADD_CALL_RECORDS	0 or 3

NUM_ADD_CALL_RECORDS + 1 occurrences of the following record:

{ (NUM_ADD_CALL_RECORDS + 1)

ADD_TAG	0 or 4
ADD_ACCEPT_IND	0 or 1
ADD_REJECT_PKTDATA_IND	0 or 1
ADD_SO_INCL	1
ADD_SO	0 or 16
ADD_CON_REF_INCL	1
ADD_CON_REF	0 or 8

} (NUM_ADD_CALL_RECORDS + 1)

RESPONSE_IND – Response indicator.

The base station shall set this field to ‘1’ if this message is a response to an *Enhanced Origination Message* from the mobile station; otherwise, the base station shall set this field to ‘0’.

TAG – Transaction identifier.

If the RESPONSE_IND field is set to ‘0’, the base station shall omit this field; otherwise, the base station shall include this field and set it as follows:

The base station shall set this field to the value of the TAG or ADD_TAG field of the *Enhanced Origination Message* to which this message is the response.

ACCEPT_IND – Accepted indicator.

If the RESPONSE_IND field is set to ‘0’, the base station shall omit this field; otherwise, the base station shall include this field and shall set it as follows:

If the base station accepts the call request from the mobile station, the base station shall set this field to ‘1’; otherwise, the base station shall set this field to ‘0’.

REJECT_PKTDATA_IND – Packet data service option rejection indicator.

If the ACCEPT_IND field is not included or is included and is set to ‘1’, the base station shall omit this field; otherwise, the base station shall include this field and shall set it as follows:

The base station shall set this field to ‘1’ to indicate rejection of the packet data service option requested by the mobile station; otherwise, the base station shall set this field to ‘0’.

BYPASS_ALERT_ANSWER – Bypass alert indicator.

If the RESPONSE_IND field is set to ‘1’, the base station shall omit this field; otherwise, the base station shall include this field and shall set it as follows:

If the mobile station is to bypass the *Waiting for Order Substate* and the *Waiting for Mobile Station Answer Substate* for this call, the base station shall set this field to ‘1’; otherwise, the base station shall set this field to ‘0’.

SO_INCL – Service option included indicator.

The base station shall set this field to ‘1’ if the SO field is included in this message; otherwise, it the base station shall set this field to ‘0’.

If the USE_OLD_SERV_CONFIG is included and is set to ’1’, the base station shall set this field to ‘0’.

SO – Service option.

If the SO_INCL field is set to ‘0’, the base station shall omit this field; otherwise, the base station shall include this field and shall set it to the value of the service option number (as specified in [30]) that the base station proposes for this call.

CON_REF_INCL – Connection reference included indicator.

If the ACCEPT_IND field is not included or is included but is set to ‘1’, the base station shall set this field to ‘1’; otherwise, the base station shall set this field to ‘0’.

If the USE_OLD_SERV_CONFIG is included and is set to ’1’, the base station shall set this field to ‘0’.

CON_REF – Connection reference.

If the CON_REF_INCL field is set to ‘0’, the base station shall omit this field; otherwise, the base station shall include this field and shall set it to the value of the connection reference that was/will be assigned to the service option connection corresponding to this call.

USE_OLD_SERV_CONFIG - Use stored service option connection record(s) indicator.

This field may be used by the base station to instruct the mobile station to use the stored service option connection record(s).

If the ACCEPT_IND field is included and is set to ‘0’, the base station shall omit this field; otherwise, the base station shall include this field and shall set it as follows:

If the mobile station is to restore one or more service option connection record(s) from the stored service configuration, the base station shall set this field to ‘1’; otherwise, the base station shall set this field to ‘0’.

SR_ID - Service reference identifier.

If the USE_OLD_SERV_CONFIG field is not included or is included and is set to ‘0’, the base station shall omit this field; otherwise, the base station shall include this field and set it as follows.

If the mobile station is to restore all remaining service option connections record from the stored service configuration, the base station shall set this field to ‘111’; if the mobile station is to restore more than one but not all remaining service option connections from the stored service configuration, the base station shall set this field to ‘000’; otherwise, the base station shall set this field to the service reference identifier corresponding to the service option connection to be restored.

SR_ID_RESTORE_BITMAP – Bitmap of service reference identifiers to be restored.

If the SR_ID field is included and set to '000', the base station shall include this field and set it as follows; otherwise, the base station shall omit this field.

This field consists of the subfields defined in Table 3.7.2.3.2.21-6. The base station shall set a subfield to '1' to indicate that the mobile station is to restore the service option connection of the corresponding service reference identifier; otherwise, the base station shall set the subfield to '0'.

ADD_CALL_INFO_INCLUDED – Additional call information included indicator.

If USE_OLD_SERV_CONFIG is not included, or is included and is set to '1', the base station shall omit this field; otherwise, the base station shall include this field and set it as follows:

If at least one occurrence of the additional call record is included in this message, the base station shall set this field to '1'; otherwise, the base station shall set this field to '0'.

NUM_ADD_CALL_RECORDS – Number of additional call records included.

If ADD_CALL_INFO_INCLUDED is not included or is included and set to '0', the base station shall omit this field; otherwise, the base station shall include this field and set it to one less than the number of occurrences of the call records included in this message.

If NUM_ADD_CALL_RECORDS is included, the base station shall include NUM_ADD_CALL_RECORDS + 1 occurrences of the following variable-field record:

ADD_TAG – Additional transaction identifier.

If the RESPONSE_IND field is set to '0', the base station shall omit this field; otherwise, the base station shall include this field and set it as follows:

The base station shall set this field to the value of the TAG or ADD_TAG field of the *Enhanced Origination Message* to which this message is the response.

ADD_ACCEPT_IND – Additional accepted indicator.

If the RESPONSE_IND field is set to '0', the base station shall omit this field; otherwise, the base station shall include this field and set it as follows:

If the base station accepts the call request from the mobile station, the base station shall set this field to '1'; otherwise, the base station shall set this field to '0'.

ADD_REJECT_PKTDATA_IND – Additional packet data service option rejection indicator.

If the ADD_ACCEPT_IND field is not included or is included and is set to '1', the base station shall omit this field; otherwise, the base station shall include this field and shall set it as follows:

The base station shall set this field to '1' to indicate rejection of the packet data service option requested by the mobile station; otherwise, the base station shall set this field to '0'.

ADD_SO_INCL – Additional service option included indicator.

The base station shall set this field to '1' if the ADD_SO field is included in this message; otherwise, it the base station shall set this field to '0'.

ADD_SO – Additional service option.

If the ADD_SO_INCL field is set to '0', the base station shall omit this field; otherwise, the base station shall include this field and shall set it to the value of the service option number (as specified in [30]) that the base station proposes for this call.

ADD_CON_REF_INCL – Additional connection reference included indicator.

If the ACCEPT_IND field is not included or is included but is set to '1', the base station shall set this field to '1'; otherwise, the base station shall set this field to '0'.

ADD_CON_REF – Connection reference.

If the ADD_CON_REF_INCL field is set to '0', the base station shall omit this field; otherwise, the base station shall include this field and shall set it to the value of the connection reference that was/will be assigned to the service option connection corresponding to this call.

3.7.3.3.2.44 Extended Alert With Information Message

MSG_TAG: EAWIM

Field	Length (bits)
CON_REF_INCL	1
CON_REF	0 or 8
NUM_REC	4

NUM_REC occurrences of the following record:

{ (NUM_REC)

RECORD_TYPE	8
RECORD_LEN	8
Type-specific fields	8 × RECORD_LEN

} (NUM_REC)

CON_REF_INCL – Connection reference included indicator.

The base station shall set this field to ‘1’ if the connection reference field is included in this message; otherwise, it shall set this field to ‘0’.

CON_REF – Connection reference.

If the CON_REF_INCL field is set to ‘0’, the base station shall omit this field; otherwise, the base station shall include this field and shall set it to the value of the connection reference assigned to the service option connection of the call, to which this message corresponds.

NUM_REC – Number of records.

The base station shall set this field to the number of information records included with this message.

The base station shall include NUM_REC occurrences of the following record as specified in 3.7.5.

RECORD_TYPE	-	Information record type. The base station shall set this field as specified in 3.7.5.
RECORD_LEN	-	Information record length. The base station shall set this field to the number of octets in the type-specific fields included in this record.
Type-specific fields	-	Type-specific fields. The base station shall include type-specific fields as specified in 3.7.5.

3.7.3.3.2.45 Extended Flash With Information Message

MSG_TAG: EFWIM

Field	Length (bits)
CON_REF_INCL	1
CON_REF	0 or 8
NUM_REC	4

NUM_REC occurrences of the following record:

{ (NUM_REC)

RECORD_TYPE	8
RECORD_LEN	8
Type-specific fields	8 × RECORD_LEN

} (NUM_REC)

CON_REF_INCL – Connection reference included indicator.

The base station shall set this field to ‘1’ if the connection reference field is included in this message; otherwise, it shall set this field to ‘0’.

CON_REF – Connection reference.

If the CON_REF_INCL field is set to ‘0’, the base station shall omit this field; otherwise, the base station shall include this field and shall set it to the value of the connection reference assigned to the service option connection of the call, to which this message corresponds.

NUM_REC – Number of records.

The base station shall set this field to the number of information records included with this message.

The base station shall include NUM_REC occurrences of the following record as specified in 3.7.5.

RECORD_TYPE	-	Information record type. The base station shall set this field as specified in 3.7.5.
RECORD_LEN	-	Information record length. The base station shall set this field to the number of octets in the type-specific fields included in this record.
Type-specific fields	-	Type-specific fields. The base station shall include type-specific fields as specified in 3.7.5.

3.7.3.3.2.46 Security Mode Command Message

MSG_TAG: SMCM

Field	Length (bits)
USE_TIME	1
ACTION_TIME	0 or 6
D_SIG_ENCRYPT_MODE	3
NUM_RECS	3

NUM_RECS occurrences of the following record

{ (NUM_RECS)

CON_REF	8
UI_ENCRYPT_MODE	3

} (NUM_RECS)

ENC_KEY_SIZE	0 or 3
C_SIG_ENCRYPT_MODE_INCL	1
C_SIG_ENCRYPT_MODE	0 or 3
MSG_INT_INFO_INCL	1
CHANGE_KEYS	0 or 1
USE_UAK	0 or 1

USE_TIME - Use action time indicator.

This field indicates whether an ACTION_TIME is specified in this message.

If an ACTION_TIME is specified in this message, the base station shall set this field to '1'; otherwise, the base station shall set this field to '0'.

ACTION_TIME - Action time.

If the USE_TIME field is set to '1', the base station shall set this field to the System Time minus $FRAME\_OFFSET_S \times 1.25$ ms, in units of 80 ms (modulo 64), at which the message is to take effect. If the USE_TIME field is set to '0', the base station shall omit this field.

D_SIG_ENCRYPT_MODE - Dedicated channel encryption mode indicator.

The base station shall set it to signaling encryption mode, as shown in Table 3.7.4.5-1.

NUM_REC - Number of user information encryption records.

The base station shall set this field to the number of user information encryption records included in this message.

The base station shall include NUM_REC occurrences of the following two-field record

CON_REF - Connection reference corresponding to the service option connection requesting for encryption.

If this field is included, the base station shall set this field to the connection reference of the service option connection corresponding to this user information encryption.

UI_ENCRYPT_MODE - Encryption mode indicator for user information privacy.

The base station shall set this field to user information encryption mode for the service option connection identified by CON_REF as shown in Table 3.7.5.7-3.

ENC_KEY_SIZE - Key Size used for user information and signaling encryption

If D_SIG_ENCRYPT_MODE is equal to '001' or '010', the base station shall include this field and set this field to the encryption key size as shown in Table 3.7.4.5-2; otherwise, the base station shall omit this field.

C_SIG_ENCRYPT_MODE_INCL - Common channel signaling encryption mode included indicator.

If C_SIG_ENCRYPT_MODE is included in this message, the base station shall set this field to '1'; otherwise, the base station shall set this field to '0'.

C_SIG_ENCRYPT_MODE - Common channel signaling encryption mode indicator.

If C_SIG_ENCRYPT_MODE_INCL is set to '1', the base station shall include this field and shall set it to the common channel signaling encryption mode, as shown in Table 3.7.4.5-1; otherwise, the base station shall omit this field.

MSG_INT_INFO_INCL – Message integrity information included indicator

The base station shall set this field to '1' if the base station supports message integrity; otherwise, the base station shall set this field to '0'.

CHANGE_KEYS – Change keys indicator

If MSG_INT_INFO_INCL is set to '0', the base station shall omit this field; otherwise, the base station shall include this field and set it as follows:

The base station shall set this field to '0' to command the mobile station not to update the encryption key and integrity key. The base station shall set this field to '1' to command the mobile station to update the encryption key and integrity key to the latest being generated.

USE_UAK – Use UAK indicator

If MSG_INT_INFO_INCL is set to '0', the base station shall omit this field; otherwise, the base station shall include this field and set it as follows:

If the base station receives an authentication vector with a UAK, the base station shall set this field to ‘1’ to indicate that the mobile station is to use UMAC; otherwise, the base station shall set this field to ‘0’ to indicate that the mobile station is to use MAC-I.

3.7.3.3.2.47 Base Station Status Response Message

MSG_TAG: BSSRSPM

Field	Length (bits)
QUAL_INFO_TYPE	8
QUAL_INFO_LEN	3
Type-specific fields.	8 × QUAL_INFO_LEN
NUM_RECORDS	4

NUM_RECORDS occurrences of the following record:

{ (NUM_RECORDS)

RECORD_TYPE	8
RECORD_LENGTH	8
Record type specific fields	variable
RESERVED	0-7 (as required)

} (NUM_RECORDS)

QUAL_INFO_TYPE – Qualification information type.

The base station shall set this field to the QUAL_INFO_TYPE field in the corresponding *Base Station Status Request Message*.

QUAL_INFO_LEN – Qualification information length.

The base station shall set this field to the QUAL_INFO_LEN field in the corresponding *Base Station Status Request Message*.

Type-specific fields – Type-specific fields.

The base station shall set these fields to the qualification information in the corresponding *Base Station Status Request Message*.

NUM_RECORDS - Number of records included in this message.

The base station shall set this field to the number of occurrences of RECORD_TYPE field in this message.

The base station shall include one occurrence of the following variable-length record for each information record that is included:

RECORD_TYPE - Information record type.

The base station shall set this field to the record type value shown in Table 3.7.3.3.2.47-1 corresponding to the information record included.

Table 3.7.3.3.2.47-1. Base Station Status Response Information Record Types

Information Record Requested	Record Type
Pilot Information	00000000
Reserved	00000001-11111111

RECORD_LENGTH - Information record length.

The base station shall set this field to the length, in octets, of the record type specific fields included in this record.

Record type specific fields - Record type specific fields

The base station shall set this field to the type specific fields corresponding to this record type.

If the RECORD_TYPE field is set to '00000000', the base station shall set the record type specific field as follows:

Field	Length (bits)
NUM_PILOTS	4
SID_NID_IND	1

NUM_PILOTS occurrences of the following record:

{ (NUM_PILOTS)

RECORD_LEN	4
PILOT_PN	9
BASE_ID	16
SID_NID_INCL	0 or 1
SID	0 or 15
NID	0 or 16
BASE_LAT_LONG_INCL	1
BASE_LAT	0 or 22
BASE_LONG	0 or 23
RESERVED_1	0–7 (as required)

} (NUM_PILOTS)

NUM_PILOTS - Number of Pilots reported.

The base station shall set this field to the number of pilots whose information is reported in this message.

The base station shall set this field to a number equal or greater than one.

SID_NID_IND - SID, NID included indicator.

The base station shall set this field to ‘1’ if SID, NID information is included in this message; otherwise, it shall set this field to ‘0’.

The base station shall include NUM_PILOTS occurrences of the following variable length record:

RECORD_LEN - Record Length.

The base station shall set this field to the length in octets of this record.

PILOT_PN - Pilot PN sequence offset index.

The base station shall set this field to the pilot PN sequence offset for this base station, in units of 64 PN chips.

BASE_ID - Base station identification.

The base station shall set this field to the Base Station identification number corresponding to this pilot.

SID_NID_INCL - SID, NID included indicator.

If the SID_NID_IND field is set to ‘0’, the base station shall omit this field; otherwise, the base station shall include this field and set it as follows:

If this is the first pilot included in this message, the base station shall set this field to ‘1’; otherwise, the base station shall set this field as follows:

If the SID and NID of this pilot are same as the SID and NID of the previous pilot, the base station shall set this field to ‘0’; otherwise, the base station shall set this field to ‘1’.

SID - System identification.

If the SID_NID_INCL field is not included or is included and is set to ‘0’, the base station shall omit this field; otherwise, the base station shall include this field and set it as follows:

The base station shall set this field to the system identification number of the system corresponding to this pilot (see 2.6.5.2).

NID - Network identification.

If the SID_NID_INCL field is not included or is included and is set to ‘0’, the base station shall omit this field; otherwise, the base station shall include this field and set it as follows:

The base station shall set this field to the network identification number of the network corresponding to this pilot (see 2.6.5.2).

BASE_LAT_LONG_INCL - Base station LAT/LONG included indicator.

The base station shall set this field to '1' if the base station LAT/LONG fields are included in this message; otherwise, the base station shall set this field to '0'.

BASE_LAT - Base station latitude.

If the BASE_LAT_LONG_INCL is set to '0', the base station shall omit this field; otherwise, the base station shall include this field and set it as follows:

The base station shall set this field to its latitude in units of 0.25 second, expressed as a two's complement signed number with positive numbers signifying North latitudes. The base station shall set this field to a value in the range -1296000 to 1296000 inclusive (corresponding to a range of -90° to +90°).

BASE_LONG - Base station longitude.

If the BASE_LAT_LONG_INCL is set to '0', the base station shall omit this field; otherwise, the base station shall include this field and set it as follows:

The base station shall set this field to its longitude in units of 0.25 second, expressed as a two's complement signed number with positive numbers signifying East longitude. The base station shall set this field to a value in the range -2592000 to 2592000 inclusive (corresponding to a range of -180° to +180°).

RESERVED_1 - Reserved bits.

The base station shall add reserved bits as needed in order to make the length of the pilot specific record equal to an integer number of octets. The base station shall set these bits to '0'.

RESERVED - Reserved bits.

The base station shall add reserved bits as needed in order to make the length of the record equal to an integer number of octets. The base station shall set these bits to '0'.

3.7.3.3.2.48 Authentication Request Message

MSG_TAG: AUREQM

Field	Length (bits)
RANDA	128
CON_SQN	48
AMF	16
MAC_A	64

RANDA – The Random Challenge Number.

The base station shall set this field to the value of the Random Challenge Number in the authentication vector.

CON_SQN – Concealed Sequence Number.

The base station shall set this field to the value of the Concealed Sequence Number in the authentication vector.

AMF – Authentication Management Field.

The base station shall set this field to the value of the Authentication Management Field in the authentication vector.

MAC_A – Message Authentication Code.

The base station shall set this field to the value of the Message Authentication Code in the authentication vector.

3.7.3.3.2.49 Rate Change Message

MSG_TAG: RATCHGM

Fields	Length (Bits)
USE_TIME	1
ACTION_TIME	6
REV_CQICH_RATE_CHANGE_INCL	1
FULL_CI_FEEDBACK_IND	0 or 1
REV_CQICH_REPS	0 or 2
SWITCHING_PARMS_INCL	0 or 1
NUM_SOFT_SWITCHING_FRAMES	0 or 4
NUM_SOFTER_SWITCHING_FRAMES	0 or 4
CHM_SWITCHING_PARMS_INCL	0 or 1
NUM_SOFT_SWITCHING_FRAMES_CHM	0 or 4
NUM_SOFTER_SWITCHING_FRAMES_CHM	0 or 4
RL_CQICH_ATT_ADJ_GAIN_INCL	0 or 1
NUM_RECS	0 or 1

If NUM_RECS is included NUM_RECS +1 occurrences of the following variable length record:

{ (NUM_RECS +1)

RL_CQICH_ATT_ADJ_GAIN_TYPE	1
RL_CQICH_ATT_ADJ_GAIN_HIGH_INCL	1
RL_CQICH_ATT_ADJ_GAIN_HIGH	0 or 8
RL_CQICH_ATT_ADJ_GAIN_LOW_INCL	1
RL_CQICH_ATT_ADJ_GAIN_LOW	0 or 8

} (NUM_RECS +1)

REV_ACKCH_RATE_CHANGE_INCL	1
REV_ACKCH_REPS	0 or 2
REV_PDCH_MAX_PARMS_INCL	1
REV_PDCH_MAX_AUTO_TPR	0 or 8
REV_PDCH_MAX_SIZE_ALLOWED_ENCODER_PACKET	0 or 4
REV_PDCH_PARMS_INCL	1
REV_PDCH_NUM_ARQ_ROUNDS_NORMAL	0 or 2
REV_PDCH_NUM_ARQ_ROUNDS_BOOST	0 or 2

USE_TIME - Use action time indicator.

This field indicates whether an explicit action time is specified in this order.

If an explicit action time is specified in this message, the base station shall set this field to '1'; otherwise, the base station shall set this field to '0'.

ACTION_TIME - Action time.

If the USE_TIME field is set to '1', the base station shall set this field to the System Time minus $FRAME\_OFFSET_S \times 1.25$ ms, in units of 80 ms (modulo 64), at which the rate change is to take effect. If the USE_TIME field is set to '0', the base station shall set this field to '000000'.

REV_CQICH_RATE_CHANGE_INCL - Reverse Channel Quality Indicator Channel rate change included indicator.

If the base station determines to change the rate of R-CQICH, the base station shall set this field to '1'; otherwise, the base station shall set this field to '0'.

FULL_CI_FEEDBACK_IND - Full C/I feedback rate indicator.

If REV_CQICH_RATE_CHANGE_INCL is equal to '0', the base station shall omit this field; otherwise, the base station shall set this field as follows:

If the mobile station is to send full C/I feedback every 1.25 ms, the base station shall set this field to '1'. If the mobile station is to transmit full C/I feedback every 20 ms, the base station shall set this field to '0'.

REV_CQICH_REPS - Reverse Channel Quality Indicator Channel repetition factor.

If REV_CQICH_RATE_CHANGE_INCL is equal to '0', the base station shall omit this field; otherwise, the base station shall set this field according to the Table 3.7.3.3.2.49-1.

Table 3.7.3.3.2.49-1 R-CQICH Repetition Factor

REV_CQICH_REPS (Binary)	Value
00	1
01	2
10	4
11	Reserved

SWITCHING_PARMS_INCL - R-CQICH switching parameters included indicator.

If the REV_CQICH_RATE_CHANGE_INCL field is set to '0', the base station shall omit this field; otherwise, the base station shall include this field and set it as follows:

The base station shall set this field to '1' if the parameters for R-CQICH soft and softer switching are included in this message; otherwise, the base station shall set this field to '0'.

NUM_SOFT_SWITCHING_FRAMES - Number of frames for R-CQICH soft switching.

If SWITCHING_PARMS_INCL is not included or included and set to '0', then the base station shall omit this field; otherwise, the base station shall include this field and set it as follows:

The base station shall set this field to the duration of the cell switching period, in units of 20 ms, minus one, during which the mobile station is to transmit the cell switch sequence on the R-CQICH channel when it switches between two pilots which are in different groups.

NUM_SOFTER_SWITCHING_FRAMES - Number of frames for R-CQICH softer switching.

If SWITCHING_PARMS_INCL is not included or included and set to '0', then the base station shall omit this field; otherwise, the base station shall include this field and set it as follows:

The base station shall set this field to the duration of the cell switching period, in units of 20 ms, minus one, during which the mobile station is to transmit the cell switch sequence on the R-CQICH channel when it switches between two pilots which are in the same group.

CHM_SWITCHING_PARMS_INCL- Control Hold Mode fields included indicator.

If SWITCHING_PARMS_INCL is omitted or equal to '0', the base station shall omit this field; otherwise, the base station shall include this field and set it as follows.

The base station shall set this field to '1' if the switching parameters for Control Hold Mode are included; otherwise, the base station shall set this field to '0'.

NUM_SOFT_SWITCHING_FRAMES_CHM - Number of frames for R-CQICH soft switching while in Control Hold.

If CHM_SWITCHING_PARMS_INCL is not included or included and set to '0', then the base station shall omit this field; otherwise, the base station shall include this field and set it as follows:

The base station shall set this field to the duration of the cell switching period, in units of 20 ms, minus one, during which the mobile station, while in Control Hold, is to transmit the cell switch sequence on the R-CQICH when it switches between two pilots which are in different groups.

NUM_SOFTER_SWITCHING_FRAMES_CHM - Number of frames for R-CQICH softer switching while in Control Hold.

If CHM_SWITCHING_PARMS_INCL is not included or included and set to '0', then the base station shall omit this field; otherwise, the base station shall include this field and set it as follows:

The base station shall set this field to the duration of the cell switching period, in units of 20 ms, minus one, during which the mobile station, while in Control Hold, is to transmit the cell switch sequence on the R-CQICH when it switches between two pilots which are in the same group.

RL_CQICH_ATT_ADJ_GAIN_INCL - Attribute adjustment gain for Reverse Channel Quality Indicator Channel included indicator.

If REV_CQICH_RATE_CHANGE_INCL is equal to '0', the base station shall omit this field; otherwise, the base station shall set this field as follows:

If the attribute adjustment gain for Reverse Channel Quality Indicator Channel is included in this message, the base station shall set this field to '1'; otherwise, the base station shall set this field to '0'.

NUM_RECS - Number of the records.

If RL_CQICH_ATT_ADJ_GAIN_INCL is omitted, or if it is included and set to '0', the base station shall omit this field.

Otherwise, the base station shall set this field to one less than the number of occurrences of the records included in this message.

If NUM_RECS is included in this message, the base station shall include NUM_RECS+1 occurrences of the following record:

RL_CQICH_ATT_ADJ_GAIN_TYPE - Reverse Channel Quality Indicator Channel attribute adjustment gain value type indicator

If the following fields are set to the nominal attribute gain adjustment values that the mobile station is to use for the transmission attributes (relative to Nominal_Attribute_Gain specified in [2]), the base station shall set this field to '0'. If the following fields are set to the pilot reference level adjustment values that the mobile station is to use for the transmission attributes (relative to Pilot_Reference_Level specified in [2]), the base station shall set this field to '1'.

RL_CQICH_ATT_ADJ_GAIN_HIGH_INCL - Attribute adjustment gain for the high power level of Reverse Channel Quality Indicator Channel transmission included indicator.

If the attribute adjustment gain for the high power level of Reverse Channel Quality Indicator Channel transmission is included in this message, the base station shall set this field to '1'; otherwise, the base station shall set this field to '0'.

RL_CQICH_ATT_ADJ_GAIN_HIGH - Attribute adjustment gain for the high power level of Reverse Channel Quality Indicator Channel transmission for the corresponding rate indicated in REV_CQICH_REPS.

If RL_CQICH_ATT_ADJ_GAIN_HIGH_INCL is not included or included but is set to '0', the base station shall omit this field; otherwise, the base station shall include this field and set it as follows:

If RL_CQICH_ATT_ADJ_GAIN_TYPE is set to ‘0’, the base station shall set this field to the value of the nominal attribute gain adjustment that the mobile station is to make for the transmission attributes for the high power level of R-CQICH. The base station shall set the value in the range from –40 to 16 inclusive.

If RL_CQICH_ATT_ADJ_GAIN_TYPE is set to ‘1’, the base station shall set this field to the value of the pilot reference level adjustment that the mobile station is to make for the transmission attributes for the high power level of R-CQICH.

The base station shall set this field to the correction factor expressed as a two’s complement value in units of 0.125 dB.

RL_CQICH_ATT_ADJ_GAIN_LOW_INCL - Attribute adjustment gain for Reverse Channel Quality Indicator Channel transmission Included Indicator.

If the attribute adjustment gain for the low power level of Reverse Channel Quality Indicator Channel transmission is included in this message, the base station shall set this field to ‘1’; otherwise, the base station shall set this field to ‘0’.

RL_CQICH_ATT_ADJ_GAIN_LOW - Attribute adjustment gain for the low power level of Reverse Channel Quality Indicator Channel transmission for the corresponding rate indicated in REV_CQICH_REPS.

If RL_CQICH_ATT_ADJ_GAIN_LOW_INCL is not included or included but is set to ‘0’, the base station shall omit this field; otherwise, the base station shall include this field and set it as follows:

If RL_CQICH_ATT_ADJ_GAIN_TYPE is set to ‘0’, the base station shall set this field to the value of the nominal attribute gain adjustment that the mobile station is to make for the transmission attributes for the low power level of R-CQICH. The base station shall set the value in the range from –16 to 16 inclusive.

If RL_CQICH_ATT_ADJ_GAIN_TYPE is set to ‘1’, the base station shall set this field to the value of the pilot reference level adjustment that the mobile station is to make for the transmission attributes for the low power level of R-CQICH.

The base station shall set this field to the correction factor expressed as a two’s complement value in units of 0.125 dB.

REV_ACKCH_RATE_CHANGE_INCL - Reverse Acknowledgment Channel rate change included indicator

If the base station determines to change the rate of R-ACKCH, the base station shall set this field to ‘1’; otherwise, the base station shall set this field to ‘0’.

If REV_CQICH_RATE_CHANGE_INCL is set to ‘0’, REV_ACKCH_RATE_CHANGE_INCL shall be set to ‘1’.

REV_ACKCH_REPS - Reverse Acknowledgment Channel repetition factor.

If REV_ACKCH_RATE_CHANGE_INCL is equal to ‘0’, the base station shall omit this field; otherwise, the base station shall include this field and set it according to the Table 3.7.3.3.2.49-2.

Table 3.7.3.3.2.49-2 R-ACKCH Repetition Factor

REV_ACKCH_REPS (Binary)	Value
‘00’	1
‘01’	2
‘10’	4
‘11’	Reserved

REV_PDCH_MAX_PARMS_INCL - Reverse Packet Data Channel maximum traffic to pilot ratio included indicator.

The base station shall set this field to ‘1’ if the Reverse Packet Data Channel maximum traffic to pilot ratio for autonomous transmission is included; otherwise, the base station shall set this field to ‘0’.

REV_PDCH_MAX_AUTO_TPR - Reverse Packet Data Channel maximum traffic to pilot ratio for autonomous transmission.

If REV_PDCH_MAX_PARMS_INCL is set to ‘0’, the base station shall omit this field; otherwise, the base station shall include this field and set it as follows.

The base station shall set this field to the maximum traffic to pilot ratio for autonomous transmission on the Reverse Packet Data Channel (see [2] and [3]).

The base station shall set this field to values in the range 0 to 18 dB inclusive in units of 0.125 dB.

REV_PDCH_MAX_SIZE_ALLOWED_ENCODER_PACKET - Maximum Allowed Reverse PDCH encoder packet size.

If REV_PDCH_MAX_PARMS_INCL is set to ‘0’, the base station shall omit this field; otherwise, the base station shall include this field and set it as follows.

The base station shall set this field to the maximum size encoder packet that the mobile station is allowed to use. (see [2] and [3]).

The base station shall set this field to a value in the range 0 to 10 inclusive, corresponding to the encoder packet sizes 192, 408, 792, 1560, 3096, 4632, 6168, 9240, 12312, 15384, and 18456 bits respectively.

REV_PDCH_PARMS_INCL - Reverse Packet Data Channel related parameters included indicator.

The base station shall set this field to '1' if the R-PDCH parameters are included in this message; otherwise, the base station shall set this field to '0'.

REV_PDCH_NUM_ARQ_ROUNDS_NORMAL - Maximum number of allowed ARQ rounds on the Reverse PDCH in the non-boosted mode.

If REV_PDCH_PARMS_INCL is set to '0', the base station shall omit this field; otherwise, the base station shall include this field and set it as follows:

The base station shall set this field to one less the maximum number of allowed ARQ rounds on the Reverse PDCH in the non-boosted mode. The base station shall set this field to 0, 1, or 2 corresponding to 1, 2, or 3 rounds respectively (See [3]).

REV_PDCH_NUM_ARQ_ROUNDS_BOOST - Maximum number of allowed HARQ retransmissions on the Reverse PDCH in the boosted mode.

If REV_PDCH_PARMS_INCL is set to '0', the base station shall omit this field; otherwise, the base station shall include this field and set it as follows:

The base station shall set this field to one less the maximum number of allowed ARQ rounds on the Reverse PDCH in the boosted mode. The base station shall set this field to 0, 1, or 2 corresponding to 1, 2, or 3 rounds respectively (See [3]).

3.7.3.3.2.50 In-Traffic BCMC Service Parameters Message

MSG_TAG: ITBSPM

Field	**Length (bits)**
AUTO_REQ_TRAF_ALLOWED_IND	1
BCMC_ON_IDLE_SUP_IND	1
BCMC_FLOWS_ON_TRAFFIC_ONLY_IND	0 or 1
AUTH_SIGNATURE_REQUIRED	1
NON_DEFAULT_VALUE_INCLUDED	0 or 1
ACH_TIME_STAMP_SHORT_LENGTH	0 or 8
TIME_STAMP_LONG_LENGTH	0 or 8
TIME_STAMP_UNIT	0 or 4
NUM_BCMC_PROGRAMS	8

NUM_BCMC_PROGRAMS plus one occurrences of the following variable length record:

{ (NUM_BCMC_PROGRAMS+1)

BCMC_PROGRAM_ID_LEN	5
BCMC_PROGRAM_ID	BCMC_PROGRAM_ID_LEN+1
BCMC_FLOW_DISCRIMINATOR_LEN	3
NUM_FLOW_DISCRIMINATOR	BCMC_FLOW_DISCRIMINATOR_LEN

NUM_FLOW_DISCRIMINATOR+1 or 1 occurrences of the following variable length record:

{ (NUM_FLOW_DISCRIMINATOR+1) or 1

BCMC_FLOW_DISCRIMINATOR	BCMC_FLOW_DISCRIMINATOR_LEN
AUTH_SIGNATURE_REQ_IND	0 or 1
BCMC_FLOW_ON_TRAFFIC_IDLE_IND	0 or 2

} (NUM_FLOW_DISCRIMINATOR+1) or 1

} (NUM_BCMC_PROGRAMS+1)

AUTO_REQ_TRAF_ALLOWED_IND - Autonomous BCMC request on traffic channel allowed indicator.

The base station shall set this field to ‘1’ to indicate that the mobile station is allowed to request for a BCMC flow on traffic channel that is not included in this message; otherwise, the base station shall set this field to ‘0’.

BCMC_ON_IDLE_SUP - BCMC on idle state supported indicator.

The base station shall set this field to ‘1’ to indicate that the BCMC feature is supported on idle state; otherwise, the base station shall set this field to ‘0’.

BCMC_FLOWS_ON_TRAFFIC_ONLY_IND - BCMC flows on traffic channel only indicator.

If the BCMC_ON_IDLE_SUP_IND field is set to ‘0’, the base station shall omit this field; otherwise, the base station shall include this field and set it as follows:

The base station shall set this field to ‘1’ if this message contains information only about BCMC flows on traffic channel; otherwise, the base station shall set this field to ‘0’.

AUTH_SIGNATURE_REQUIRED - Authorization signature required indication.

The base station shall set this field to ‘1’ to indicate that the mobile station is to include the authorization signature in the Origination Message, Page Response Message and Enhanced Origination Message that include BCMC_FLOW_ID (see 2.6.13.11) for BCMC flows indicated in this message is included in that message; otherwise, the base station shall set this field to ‘0’.

NON_DEFAULT_VALUE_INCLUDED - Non-default values for Authorization signature included indicator.

If the AUTH_SIGNATURE_REQUIRED field is set to ‘0’, the base station shall omit this field; otherwise, the base station shall include this field and set it as follows:

The base station shall set this field to ‘0’ if default values are to be used to generate the Authorization signature; otherwise, the base station shall set this field to ‘1’.

ACH_TIME_STAMP_SHORT_LENGTH - Length of time stamp for use on r-csch.

If the NON_DEFAULT_VALUE_INCLUDED field is not included or is included and is set to ‘0’, the base station shall omit this field; otherwise, the base station shall include this field and set it as follows:

The base station shall set this field to the length of the time stamp, in units of bits, included on the Origination Message, Page Response Message and Enhanced Origination Message.

TIME_STAMP_LONG_LENGTH - Length of time stamp.

If the NON_DEFAULT_VALUE_INCLUDED field is not included or is included and is set to ‘0’, the base station shall omit this field; otherwise, the base station shall include this field and set it as follows:

The base station shall set this field to the length of the time stamp, in units of bits, used to generate the Authorization signature.

TIME_STAMP_UNIT - Unit for time stamp length.

If the NON_DEFAULT_VALUE_INCLUDED field is not included or is included and is set to '0', the base station shall omit this field; otherwise, the base station shall include this field and set it as follows:

The base station shall set this field to the unit of the time stamp length field as follows: the unit of the time stamp field shall be 2 to the power of the value of this field.

NUM_BCMC_PROGRAMS - Number of BCMC Programs.

The base station shall set this field to the number of BCMC programs available in this base station in any one of the frequencies minus one.

The base station shall include NUM_BCMC_PROGRAMS plus one occurrences of the following variable length record:

BCMC_PROGRAM_ID_LEN - Length of BCMC_PROGRAM_ID field

The base station shall set this field to one less than the length in bits of the BCMC_PROGRAM_ID of this program.

BCMC_PROGRAM_ID - BCMC program Identifier

The length of this field shall be one more than the value of BCMC_PROGRAM_ID_LEN bits.

The base station shall set this field to the BCMC program identifier of this program.

BCMC_FLOW_DISCRIMINATOR_LEN - Length of BCMC_FLOW_DISCRIMINATOR field

The base station shall set this field to the length in bits of the BCMC_FLOW_DISCRIMINATOR of this program.

NUM_FLOW_DISCRIMINATOR - Number of BCMC flow discriminators

The length of this field shall be determined by the value of the BCMC_FLOW_DISCRIMINATOR_LEN as follows: if BCMC_FLOW_DISCRIMINATOR_LEN is set to '000', this field is omitted; otherwise, the length of this field shall be BCMC_FLOW_DISCRIMINATOR_LEN bits.

The base station shall set this field to the number of flow discriminators included for this program minus one.

If NUM_FLOW_DISCRIMINATOR field is included, the base station shall include NUM_FLOW_DISCRIMINATOR+1 occurrences of the following variable length record; otherwise, the base station shall include 1 occurrence of the following variable length record:

BCMC_FLOW_DISCRIMINATOR - BCMC flow discriminator

The length of this field shall be determined by the value of the BCMC_FLOW_DISCRIMINATOR_LEN as follows: if BCMC_FLOW_DISCRIMINATOR_LEN is set to '000', this field is omitted; otherwise, the length of this field shall be BCMC_FLOW_DISCRIMINATOR_LEN bits.

The base station shall set this field to the BCMC flow discriminator of this flow.

AUTH_SIGNATURE_REQ_IND - Authorization signature required indicator

If the AUTH_SIGNATURE_REQUIRED field is set to '0', the base station shall omit this field; otherwise, the base station shall include this field and set it as follows:

The base station shall set this field to '1' if the mobile station is to include the authorization signature in the Origination Message, Page Response Message, and Enhanced Origination Message for this BCMC flow; otherwise, the base station shall set this field to '0'.

BCMC_FLOW_ON_TRAFFIC_IDLE_IND - BCMC flow on traffic state or idle state supported indicator.

If the BCMC_FLOWS_ON_TRAFFIC_ONLY_IND field is not included or is included and set to '1', the base station shall omit this field; otherwise, the base station shall include this field and set it as follows:

The base station shall set this field as specified in Table 3.7.3.3.2.50-1 to indicate the availability of this flow in the traffic state or idle state.

Table 3.7.3.3.2.50-1. BCMC Flow Availability

BCMC_FLOW_ON_TRAFFIC_ IDLE_IND (Binary)	**Availability**
00	Available in Idle State only
01	Available in Traffic State only
10	Available in both Idle State and Traffic State
11	Reserved

3.7.3.3.2.51 Radio Configuration Parameters Message

MSG_TAG: RCPM

Field	Length (bits)
USE_TIME	1
ACTION_TIME	0 or 6
FOR_FCH_ACK_MASK_RL_BLANKING_INC	1
FOR_FCH_ACK_MASK_RL_BLANKING	0 or 16
FOR_FCH_ACK_MASK_NO_RL_BLANKING_INC	1
FOR_FCH_ACK_MASK_NO_RL_BLANKING	0 or 16
REV_FCH_ACK_MASK_INC	1
REV_FCH_ACK_MASK	0 or 16
FOR_SCH_ACK_MASK_RL_BLANKING_INC	1
FOR_SCH_ACK_MASK_RL_BLANKING	0 or 16
FOR_SCH_ACK_MASK_NO_RL_BLANKING_INC	1
FOR_SCH_ACK_MASK_NO_RL_BLANKING	0 or 16
REV_SCH_ACK_MASK_INC	1
REV_SCH_ACK_MASK	0 or 16
FOR_N2M_IND	3
RPC_MODE	2
PWR_CNTL_STEP_ZERO_RATE	3
FOR_FCH_BLANKING_DUTYCYCLE	3
REV_FCH_BLANKING_DUTYCYCLE	3
REV_ACKCH_GAIN_ADJ_ACS1_INC	1
REV_ACKCH_GAIN_ADJ_ACS1	7
REV_ACKCH_GAIN_ADJ_ACS2PLUS_INC	1
REV_ACKCH_GAIN_ADJ_ACS2PLUS	7
NUM_RC_PARAMS_RECORDS	3

NUM_RC_PARAMS_RECORDS occurrences of the following record:

{ (NUM_RC_PARAMS_RECORDS)

PILOT_PN	9
QOF_SET_IN_USE	3
REV_SCH0_ACK_BIT_INC	1
REV_SCH0_ACK_CH_WALSH	0 or 7

Field	Length (bits)
REV_SCH0_ACK_BIT	0 or 5
REV_SCH1_ACK_BIT_INC	1
REV_SCH1_ACK_CH_WALSH	0 or 7
REV_SCH1_ACK_BIT	0 or 5
FOR_FCH_CCSH_INTERLEAVER_TYPE	1

} (NUM_RC_PARAMS_RECORDS)

USE_TIME - Use action time indicator.

This field indicates whether an explicit action time is specified in this message.

If an explicit action time is specified in this message, the base station shall set this field to '1'; otherwise, the base station shall set this field to '0'.

ACTION_TIME - Action time.

If the USE_TIME field is set to '1', the base station shall set this field to the System Time minus $FRAME\_OFFSET_S \times 1.25$ ms, in units of 80 ms (modulo 64), at which the message is to take effect. If the USE_TIME field is set to '0', the base station shall omit this field.

FOR_FCH_ACK_MASK_RL_BLANKING_INC - Ack mask for F-FCH RC11 and RC12 when RL Blanking is enabled is included

If the FOR_FCH_ACK_MASK_RL_BLANKING field is included in this message, then the base station shall set this field to '1'. Otherwise, the base station shall set this field to '0'.

FOR_FCH_ACK_MASK_RL_BLANKING - Ack mask for F-FCH RC11 and RC12 when RL Blanking is enabled.

If the FOR_FCH_ACK_MASK_RL_BLANKING_INC field is set to '0', then the base station shall omit this field. Otherwise, the base station shall include this field and set it to ack mask for F-FCH RC11 and RC12 when RL Blanking is enabled as describe below:

This field consists of the subfields shown in Table 3.7.3.3.2.51-1. The base station shall set the subfields corresponding to the PCGs where Ack can be sent to '1', and shall set the remaining subfields to '0'.

Table 3.7.3.3.2.51-1. Ack Mask

Subfield	Length (bits)	Subfield Description
ACK_MASK_0	1	Ack allowed in PCG 0
ACK_MASK_1	1	Ack allowed in PCG 1
ACK_MASK_2	1	Ack allowed in PCG 2
ACK_MASK_3	1	Ack allowed in PCG 3
ACK_MASK_4	1	Ack allowed in PCG 4
ACK_MASK_5	1	Ack allowed in PCG 5
ACK_MASK_6	1	Ack allowed in PCG 6
ACK_MASK_7	1	Ack allowed in PCG 7
ACK_MASK_8	1	Ack allowed in PCG 8
ACK_MASK_9	1	Ack allowed in PCG 9
ACK_MASK_10	1	Ack allowed in PCG 10
ACK_MASK_11	1	Ack allowed in PCG 11
ACK_MASK_12	1	Ack allowed in PCG 12
ACK_MASK_13	1	Ack allowed in PCG 13
ACK_MASK_14	1	Ack allowed in PCG 14
ACK_MASK_15	1	Ack allowed in PCG 15

FOR_FCH_ACK_MASK_NO_RL_BLANKING_INC - Ack mask for F-FCH RC11 and RC12 when RL Blanking is disabled is included

If the FOR_FCH_ACK_MASK_NO_RL_BLANKING field is included in this message, then the base station shall set this field to ‘1’. Otherwise, the base station shall set this field to ‘0’.

FOR_FCH_ACK_MASK_NO_RL_BLANKING - Ack mask for F-FCH RC11 and RC12 when RL Blanking is disabled.

If the FOR_FCH_ACK_MASK_NO_RL_BLANKING_INC field is set to ‘0’; then the base station shall omit this field. Otherwise, the base station shall include this field and set it to ack mask for F-FCH RC11 and RC12 when RL Blanking is disabled as describe below:

This field consists of the subfields shown in Table 3.7.3.3.2.51-1. The base station shall set the subfields corresponding to the PCGs where Ack can be sent to ‘1’, and shall set the remaining subfields to ‘0’.

REV_FCH_ACK_MASK_INC - Ack mask for R-FCH RC08 included

If the REV_FCH_ACK_MASK field is included in this message, then the base station shall set this field to ‘1’. Otherwise, the base station shall set this field to ‘0’.

REV_FCH_ACK_MASK - Ack mask for R-FCH RC08

If the REV_FCH_ACK_MASK_INC field is set to ‘0’, then the base station shall omit this field. Otherwise, the base station shall include this field and set it to ack mask for R-FCH RC08 as describe below:

This field consists of the subfields shown in Table 3.7.3.3.2.51-1. The base station shall set the subfields corresponding to the PCGs where Ack can be sent to ‘1’, and shall set the remaining subfields to ‘0’.

FOR_SCH_ACK_MASK_RL_BLANKING_INC - Ack mask for F-SCH RC11 and RC12 when RL Blanking is enabled is included

If the FOR_SCH_ACK_MASK_RL_BLANKING field is included in this message, then the base station shall set this field to ‘1’. Otherwise, the base station shall set this field to ‘0’.

FOR_SCH_ACK_MASK_RL_BLANKING - Ack mask for F-SCH RC11 and RC12 when RL Blanking is enabled.

If the FOR_SCH_ACK_MASK_RL_BLANKING_INC field is set to ‘0’, then the base station shall omit this field. Otherwise, the base station shall include this field and set it to ack mask for F-SCH RC11 and RC12 when RL Blanking is enabled as describe below:

This field consists of the subfields shown in Table 3.7.3.3.2.51-1. The base station shall set the subfields corresponding to the PCGs where Ack can be sent to ‘1’, and shall set the remaining subfields to ‘0’.

FOR_SCH_ACK_MASK_NO_RL_BLANKING_INC - Ack mask for F-SCH RC11 and RC12 when RL Blanking is disabled is included

If the FOR_SCH_ACK_MASK_NO_RL_BLANKING field is included in this message, then the base station shall set this field to ‘1’. Otherwise, the base station shall set this field to ‘0’.

FOR_SCH_ACK_MASK_NO_RL_BLANKING - Ack mask for F-SCH RC11 and RC12 when RL Blanking is disabled.

If the FOR_SCH_ACK_MASK_NO_RL_BLANKING_INC field is set to ‘0’; then the base station shall omit this field. Otherwise, the base station shall include this field and set it to ack mask for F-SCH RC11 and RC12 when RL Blanking is disabled as describe below:

This field consists of the subfields shown in Table 3.7.3.3.2.51-1. The base station shall set the subfields corresponding to the PCGs where Ack can be sent to ‘1’, and shall set the remaining subfields to ‘0’.

REV_SCH_ACK_MASK_INC - Ack mask for R-SCH RC08 included

If the REV_SCH_ACK_MASK field is included in this message, then the base station shall set this field to '1'. Otherwise, the base station shall set this field to '0'.

REV_SCH_ACK_MASK - Ack mask for R-SCH RC08

If the REV_SCH_ACK_MASK_INC field is set to '0', then the base station shall omit this field. Otherwise, the base station shall include this field and set it to ack mask for R-SCH RC08 as describe below:

This field consists of the subfields shown in Table 3.7.3.3.2.51-1. The base station shall set the subfields corresponding to the PCGs where Ack can be sent to '1', and shall set the remaining subfields to '0'.

FOR_N2M_IND - N_{2m} for Forward Link RC11 and RC12 Indicator

The base station shall set this field to the value shown in Table 3.7.3.3.2.51-3 corresponding to the number of guaranteed transmission frames received with insufficient signal quality that will cause the mobile station to disable its transmitter when RC11 and RC12 is used on F-FCH.

Table 3.7.3.3.2.51-3. N_{2m} value for Forward Link RC11 and RC12

Value (binary)	Number of bad frames
000	2
001	4
010	6
011	8
All other values are reserved.	

RPC_MODE - Power control mode

The base station shall set this field as follows:

– Set to '00' if power control rate is 200 to 400 bps.

– Set to '01' if power control rate is 200 bps.

The base station shall not set this field to '10' or '11'.

PWR_CNTL_STEP_ZERO_RATE - Power control step size during RL Blanking

The base station shall set this field to the closed loop power control step size parameter shown in Table 3.7.3.3.2.51-4 corresponding to the power control step size that the mobile station is to use for closed loop power control during RL Blanking.

Table 3.7.3.3.2.51-4. Closed Loop Power Control Step Size

PWR_CNTL_STEP_ZERO_RATE (binary)	Power Control Step Size (dB nominal)
000	1
001	0.5
010	0.25
011	1.5
100	2.0
All other values are reserved.	

FOR_FCH_BLANKING_DUTYCYCLE - N (duty cycle) value for Forward Link RC11 and RC12.

The base station shall set this field to the value shown in Table 3.7.3.3.2.51-5 corresponding to the duty cycle value to be used on Forward Link RC11 and RC12.

Table 3.7.3.3.2.51-5. N (duty cycle) value for FL RC11, RC12 and RL RC08

Value (binary)	N	Description
000	1	Blanking Disabled
001	4	At least 1 out of 4 frames transmitted
010	8	At least 1 out of 8 frames transmitted
All other values are reserved.		

REV_FCH_BLANKING_DUTYCYCLE - N (duty cycle) value for Reverse Link RC08.

The base station shall set this field to the value shown in Table 3.7.3.3.2.51-5 corresponding to the duty cycle value to be used on Reverse Link RC08.

REV_ACKCH_GAIN_ADJ_ACS1_INC - Channel adjustment gain for Reverse Acknowledgment Channel 1, Reverse Acknowledgment Channel 2, and Reverse Acknowledgment Channel 3 for RC11 and RC12 when number of cells in the active set equals 1 is included.

If the REV_ACKCH_GAIN_ADJ_ACS1 field is included in this message, then the base station shall set this field to ‘1’. Otherwise, the base station shall set this field to ‘0’.

REV_ACKCH_GAIN_ADJ_ACS1 - Channel adjustment gain for Reverse Acknowledgment Channel 1, Reverse Acknowledgment Channel 2, and Reverse Acknowledgment Channel 3 for RC11 and RC12 when number of cells in the active set equals 1.

If REV_ACKCH_GAIN_ADJ_ACS1_INC is set to '0', the base station shall omit this field; otherwise, the base station shall set this field to the value of the gain adjustment that the mobile station is to make for the Reverse Acknowledgment Channel 1, Reverse Acknowledgment Channel 2, and Reverse Acknowledgment Channel 3. The base station shall set this field to the correction factor expressed as a two's complement value in units of 0.125 dB. The base station shall set the value in the range from -8 to 8 inclusive.

REV_ACKCH_GAIN_ADJ_ACS2PLUS_INC - Channel adjustment gain for Reverse Acknowledgment Channel 1, Reverse Acknowledgment Channel 2, and Reverse Acknowledgment Channel 3 for RC11 and RC12 when number of cells in the active set exceeds 1 is included.

If the REV_ACKCH_GAIN_ADJ_ACS2PLUS field is included in this message, then the base station shall set this field to '1'. Otherwise, the base station shall set this field to '0'.

REV_ACKCH_GAIN_ADJ_ACS2PLUS - Channel adjustment gain for Reverse Acknowledgment Channel 1, Reverse Acknowledgment Channel 2, and Reverse Acknowledgment Channel 3 for RC11 and RC12 when number of cells in the active set exceeds 1.

If REV_ACKCH_GAIN_ADJ_ACS2PLUS_INC is set to '0', the base station shall omit this field; otherwise, the base station shall set this field to the value of the gain adjustment that the mobile station is to make for the Reverse Acknowledgment Channel 1, Reverse Acknowledgment Channel 2, and Reverse Acknowledgment Channel 3. The base station shall set this field to the correction factor expressed as a two's complement value in units of 0.125 dB. The base station shall set the value in the range from -8 to 8 inclusive.

NUM_RC_PARAMS_RECORDS - Number of RC Parameters Records

The base station shall set this field to number of RC Parameters records included in this message.

PILOT_PN - Pilot PN sequence offset index.

The base station shall set this field to the pilot PN sequence offset for this base station, in units of 64 PN chips.

QOF_SET_IN_USE - QOF Set in use

This field consists of the subfields shown in Table 3.7.3.3.2.51-2. The base station shall set the subfields corresponding to the QOF Sets that are in use for this PILOT_PN to '1', and shall set the remaining subfields to '0'.

Table 3.7.3.3.2.51-2. QOF Set in use

Subfield	Length (bits)	Subfield Description
QOF_SET_1	1	QOF SET 1
QOF_SET_2	1	QOF SET 2
QOF_SET_3	1	QOF SET 3

REV_SCH0_ACK_BIT_INC - Reverse SCH0 Ack bit assignment included

If the REV_SCH0_ACK_CH_WALSH and REV_SCH0_ACK_BIT fields are included, then the base station shall set this field to '1'. Otherwise, the base station shall set this field to '0'.

REV_SCH0_ACK_CH_WALSH - Reverse SCH0 Ack Channel Walsh Code Assignment for RC08

If the REV_SCH0_ACK_BIT_INC field is set to '0', then the base station shall omit this field. Otherwise, the base station shall include this field and set it as follows:

The base station shall set this field to the Walsh code assignment for the Ack Channel used for RC08.

REV_SCH0_ACK_BIT - Reverse SCH0 Ack Bit for RC08

If the REV_SCH0_ACK_BIT_INC field is set to '0', then the base station shall omit this field. Otherwise, the base station shall include this field and set it as follows:

The base station shall set this field to Ack Bit (on Ack Channel in the REV_SCH0_ACK_CH_WALSH field) used for RC08.

REV_SCH1_ACK_BIT_INC - Reverse SCH1 Ack bit assignment included

If the REV_SCH1_ACK_CH_WALSH and REV_SCH1_ACK_BIT fields are included, then the base station shall set this field to '1'. Otherwise, the base station shall set this field to '0'.

REV_SCH1_ACK_CH_WALSH - Reverse SCH1 Ack Channel for RC08

If the REV_SCH1_ACK_BIT_INC field is set to '0', then the base station shall omit this field. Otherwise, the base station shall include this field and set it as follows:

The base station shall set this field to the Walsh code assignment for the Ack Channel used for RC08.

REV_SCH1_ACK_BIT - Reverse SCH1 Ack Bit for RC08

If the REV_SCH1_ACK_BIT_INC field is set to '0', then the base station shall omit this field. Otherwise, the base station shall include this field and set it as follows:

The base station shall set this field to Ack Bit (on Ack Channel in the REV_SCH1_ACK_CH_WALSH field) used for RC08.

FOR_FCH_CCSH_INTERLEAVER_TYPE - Interleaver type used for Forward FCH RC12

The base station shall set this field to ‘0’ for all RCs other than RC12, and may set this bit to ‘1’ for RC12. The base station shall set this bit to ‘1’ to indicate that alternate interleaver type is being used.

3.7.3.3.2.52 Handoff Supplementary Information Solicit Message

MSG_TAG: HOSISM

Field	Length (bits)
NUM_PILOT_PN	8
NUM_PILOT_PN occurrences of the following field:	
PILOT_PN	9 x NUM_PILOT_PN

NUM_PILOT_PN - Number of Pilot PN being solicited.

The base station shall set this field based on the number of Pilot PN included in this message following this field.

PILOT_PN - Pilot PN sequence offset index.

The base station shall set this field to the pilot PN sequence offset, in units of 64 PN chips, that the base station is soliciting supplementary handoff information.

3.7.3.3.2.53 General Extension Message

Please see section 3.7.2.3.2.44.

3.7.4 Orders

Order Messages are sent by the base station on the f-csch and the f-dsch. The general PDU format used on the f-csch is defined in 3.7.2.3.2.7, and the general PDU format used on the f-dsch is defined in 3.7.3.3.2.1. There are many specific types of *Order Messages*, as shown in Table 3.7.4-1.

The base station may send on the f-csch any type of order shown in Table 3.7.4-1 with a 'Y' in the first column, but shall not send on the f-csch any type of order with an 'N' in the first column. The base station may send on the f-dsch any type of order shown in Table 3.7.4-1 with a 'Y' in the second column, but shall not send on the f-dsch any type of order with an 'N' in the second column.

An order consists of a 6-bit order code and zero or more order-specific fields. The base station shall set the ORDER field in the *Order Message* to the order code shown in Table 3.7.4-1 corresponding to the type of order being sent.

If the order qualification code in the fourth column of Table 3.7.4-1 is '00000000' and there are no other additional fields as shown by an 'N' in the sixth column, the base station shall include no order qualification code or other order-specific fields in the *Order Message*. The order qualification code of such a message is implicitly '00000000'.

If the order qualification code is not '00000000' and there are no other additional fields as shown in Table 3.7.4-1 by an 'N' in the sixth column, the base station shall include the order qualification code as the only order specific field in the *Order Message*.

If there are other additional fields as shown in Table 3.7.4-1 by a 'Y' in the sixth column, the base station shall include order-specific fields as specified in the corresponding subsection of this section.

Table 3.7.4-1. Order and Order Qualification Codes Used on the f-csch and the f-dsch (Part 1 of 5)

f-csch Order	f-dsch Order	Order Code, ORDER (binary)	Order Qualification Code, ORDQ (binary)	ACTION_TIME can be specified	Additional Fields other than ORDQ	P_REV_IN_USE[18]	Name/Function
Y	N	000001	00000000	N	N	All	*Abbreviated Alert Order*
Y	Y	000010	00000000	N	Y	All	*Base Station Challenge Confirmation Order* (see 3.7.4.1)
N	Y	000011	000000nn	Y	N	All	*Message Encryption Mode Order* (where nn is the mode per Table 3.7.2.3.2.8-2)
Y	N	000100	00000000	N	N	All	*Reorder Order*
N	Y	000101	0000nnnn	N	N	All	*Parameter Update Order* (where 'nnnn' is the Request Number)
Y	Y	000110	00000000	N	N	All	*Audit Order*
Y	N	001001	00000000	N	N	All	*Intercept Order*
N	Y	001010	00000000	N	N	All	*Maintenance Order*
Y	Y	010000	00000000	N	N	All	*Base Station Acknowledgment Order* (see [4])
N	Y	010001	00000000	N	N	All	*Pilot Measurement Request Order*
N	Y	010001	Nnnnnnnn (in the range of 00000001 to 11111111)	N	Y	≥ 4	*Periodic Pilot Measurement Request Order* (see 3.7.4.6)
Y	Y	010010	0001nnnn	N	N	All	*Lock Until Power-Cycled Order* (where nnnn is the lock reason)
Y	Y	010010	0010nnnn	N	N	All	*Maintenance Required Order* (where nnnn is the maintenance reason)
Y	N	010010	11111111	N	N	All	*Unlock Order*

[18] P_REV_IN_USE equal to "All" implies all values applicable to the Band Class.

Table 3.7.4-1. Order and Order Qualification Codes Used on the f-csch and the f-dsch (Part 2 of 5)

f-csch Order	f-dsch Order	Order Code, ORDER (binary)	Order Qual-ification Code, ORDQ (binary)	ACTION_ TIME can be specified	Addi-tional Fields other than ORDQ	P_REV_ IN_USE	Name/Function
N	Y	010011	00000000	Y	Y	< 7	*Service Option Request Order* (Band Class 0 only) (see 3.7.4.2)
N	Y	010100	00000000	Y	Y	< 7	*Service Option Response Order* (Band Class 0 only; see 3.7.4.3)
Y	Y	010101	00000000	N	N	All	*Release Order* (no reason given)
Y	Y	010101	00000010	N	N	All	*Release Order* (indicates that requested service option is rejected)
N	Y	010110	00000000	N	N	≥ 6	*Outer Loop Report Request Order*
N	Y	010111	00000000	Y	N	All	*Long Code Transition Request Order* (request public)
N	Y	010111	00000001	Y	N	All	*Long Code Transition Request Order* (request private)
N	Y	011001	0000nnnn	N	N	All	*Continuous DTMF Tone Order* (where the tone is designated by 'nnnn' as defined in Table 2.7.1.3.2.4-4)
N	Y	011001	11111111	N	N	All	*Continuous DTMF Tone Order* (stop continuous DTMF tone)
N	Y	011010	nnnnnnnn	N	N	< 8	*Status Request Order* (Band Class 0 only; see 3.7.4.4)

Table 3.7.4-1. Order and Order Qualification Codes Used on the f-csch and the f-dsch (Part 3 of 5)

f-csch Order	f-dsch Order	Order Code, ORDER (binary)	Order Qualification Code, ORDQ (binary)	ACTION_TIME can be specified	Additional Fields other than ORDQ	P_REV_IN_USE	Name/Function
Y	N	011011	00000000	N	N	All	*Registration Accepted Order* (ROAM_INDI not included; see 3.7.4.5)
Y	N	011011	00000001	N	N	All	*Registration Request Order*
Y	N	011011	00000010	N	N	All	*Registration Rejected Order*
Y	N	011011	00000100	N	N	1, ≥ 4	*Registration Rejected Order* (delete TMSI)
Y	N	011011	00000101	N	Y	≥ 4	*Registration Accepted Order* (ROAM_INDI included but the signaling encryption related fields are not included; see 3.7.4.5)
Y	N	011011	00000111	N	Y	≥ 7	*Registration Accepted Order* (ROAM_INDI and the signaling encryption related fields are included; see 3.7.4.5)
N	Y	011101	nnnnnnnn	Y	N	< 7	*Service Option Control Order* (Band Class 0 only) (the specific control is designated by 'nnnnnnnn' as determined by each service option)
Y	Y	011110	nnnnnnnn	N	N	All	*Local Control Order* (the specific order is designated by 'nnnnnnnn' as determined by each system)
Y	N	011111	00000000	N	N	≥ 6	*Slotted Mode Order* (transition to the slotted mode operation.)

Table 3.7.4-1. Order and Order Qualification Codes Used on the f-csch and the f-dsch (Part 4 of 5)

f-csch Order	f-dsch Order	Order Code, ORDER (binary)	Order Qualification Code, ORDQ (binary)	ACTION_TIME can be specified	Additional Fields other than ORDQ	P_REV_IN_USE	Name/Function
Y	Y	100000	00000000	N	Y	≥ 6	*Retry Order* (indicates that the requested operation is rejected and retry delay is included, see 3.7.4.7)
Y	Y	100001	00000000	Y	N	≥ 7	*Base Station Reject Order* (indicates that the base station can not decrypt an *Origination Message* or *Reconnect Message* with ORIG_IND set to '1' from the mobile station)
Y	Y	100001	00000001	Y	N	≥ 7	*Base Station Reject Order* (indicates that the base station can not decrypt any message (other than an *Origination Message* or *Reconnect Message* with ORIG_IND set to '1') from the mobile station)
Y	Y	100001	00000010	Y	Y	≥ 10	*Base Station Reject Order* (indicates that the base station does not accept the message from the mobile station due to either encryption error, message integrity error, or both, see 3.7.4.9)
Y	N	100010	00000000	N	N	≥ 10	*Transit to Idle Order* (indicates that the mobile station is going to transit to the Idle State from the *System Access Substate* upon reception of this order)
Y	Y	100011	00000000	N	Y	≥ 11	*BCMC Order* (see 3.7.4.10)
Y	N	100100	00000000	N	Y	≥ 11	*Fast Call Setup Order* (indicates base station request for mobile station to operate in fast call setup mode, see 3.7.4.11)

Table 3.7.4-1. Order and Order Qualification Codes Used on the f-csch and the f-dsch (Part 5 of 5)

f-csch Order	f-dsch Order	Order Code, ORDER (binary)	Order Qualification Code, ORDQ (binary)	ACTION_TIME can be specified	Additional Fields other than ORDQ	P_REV_IN_USE	Name/Function
Y	N	100100	00000001	N	Y	≥ 11	*Fast Call Setup Order* (indicates base station response to mobile station's request to operate in fast call setup mode, see 3.7.4.11)
Y	Y	100101	00000000	N	Y	≥ 11	*Service Status Order* (indicates status of requested services; see 3.7.4.12)
Y	Y	100110	00000001	N	Y	≥ 11	*Location Services Order* (indicates mobile station is to release current location services session(s), see 3.7.4.13)
N	Y	100111	00000000	N	N	≥ 11	*Shared Channel Configuration Order* (indicates R-FCH assignment)
N	Y	100111	00000001	N	N	≥ 11	*Shared Channel Configuration Order* (indicates R-FCH release)
All other codes are reserved.							

3.7.4.1 Base Station Challenge Confirmation Order

The *Base Station Challenge Confirmation Order* can be sent on either the f-csch or on the f-dsch.

Order Specific Field	Length (bits)
ORDQ	8
AUTHBS	18
RESERVED	6

ORDQ - Order qualification code.

The base station shall set this field to ‘00000000’.

AUTHBS - Challenge response.

The base station shall set this field as specified in 2.3.12.1.5.

RESERVED - Reserved bits.

The base station shall set this field to ‘000000’.

3.7.4.2 Service Option Request Order

The *Service Option Request Order* can be sent only on the f-dsch.

Order Specific Field	Length (bits)
ORDQ	8
SERVICE_OPTION	16

ORDQ - Order qualification code.

The base station shall set this field to '00000000'.

SERVICE_OPTION - Service option.

The base station shall set this field to the service option code shown in [30], corresponding to the requested or alternative service option.

3.7.4.3 Service Option Response Order

The *Service Option Response Order* can be sent only on the f-dsch.

Order Specific Field	Length (bits)
ORDQ	8
SERVICE_OPTION	16

ORDQ - Order qualification code.

The base station shall set this field to '00000000'.

SERVICE_OPTION - Service option.

The base station shall set this field to the service option code shown in [30], corresponding to the accepted service option, or to '0000000000000000' to reject the last service option requested by the mobile station.

3.7.4.4 Status Request Order

The *Status Request Order* can be sent only on the f-dsch. The ORDQ field of the *Status Request Order* specifies the information record to be returned by the mobile station in the *Status Message*.

Order Specific Field	Length (bits)
ORDQ	8

ORDQ - Order qualification code.

The base station shall set this field to the order qualification code corresponding to the information record type to be returned by the mobile station in the *Status Message*, as shown in Table 3.7.4.4-1.

If MOB_P_REV is equal to or greater than seven, the base station shall not request the Call Mode information record (record type '00000111' in Table 3.7.2.3.2.15-2).

Table 3.7.4.4-1. Status Request ORDQ Values

Information Record Requested	ORDQ (binary)
Reserved	00000110
Call Mode	00000111
Terminal Information	00001000
Roaming Information	00001001
Security Status	00001010
IMSI	00001100
ESN	00001101
IMSI_M	00001110
IMSI_T	00001111
All other ORDQ values are reserved.	

3.7.4.5 Registration Accepted Order

The *Registration Accepted Order* can be sent only on the f-csch.

Order Specific Field	Length (bits)
ORDQ	8
ROAM_INDI	0 or 8
C_SIG_ENCRYPT_MODE	0 or 3
ENC_KEY_SIZE	0 or 3
MSG_INT_INFO_INCL	0 or 1
CHANGE_KEYS	0 or 1
USE_UAK	0 or 1
RESERVED	0 – 7 (as needed)

ORDQ - Order qualification code.

If only ORDQ is included in the order, the base station shall set this field to '00000000'. If only ORDQ and ROAM_INDI are included in the order, the base station shall set this field to '00000101'. If ORDQ, ROAM_INDI, and the signaling encryption related fields are included in the order, the base station shall set this field to '00000111'.

ROAM_INDI - Roaming display indication.

If ORDQ is set to '00000000', the base station shall omit this field.

If ORDQ is set to '00000101' or '00000111', the base station shall include this field and set it as follows; otherwise, the base station shall omit this field.

The base station shall set it to the appropriate ROAM_INDI code corresponding to the MS roaming condition. These values are defined in [30].

C_SIG_ENCRYPT_MODE - Common channel signaling encryption mode indicator.

If ORDQ is set to '00000111', the base station shall include this field and shall set it as follows; otherwise, the base station shall omit this field.

The base station shall set it to the common channel signaling encryption mode, as shown in Table 3.7.4.5-1; otherwise the base station shall omit this field.

Table 3.7.4.5-1. (Part 1 of 2) Signaling Message Encryption Modes

C_SIG_ENCRYPT_MODE Field (binary)	Encryption Mode Used
000	Common Channel Signaling encryption disabled
001	Enhanced Cellular Message Encryption Algorithm enabled
010	Rijndael Encryption Algorithm enabled
011 - 111	Reserved

Table 3.7.4.5-1 (Part 2 of 2). Signaling Message Encryption Modes

D_SIG_ENCRYPT_MODE Field (binary)	Encryption Mode Used
000	If D_SIG_ENCRYPT_MODE$_r$ is included and is set to '000' in a *Channel Assignment Message* or *Extended Channel Assignment Message*, the mobile station is to continue to use the current common channel encryption mode and algorithm for the dedicated channel. If D_SIG_ENCRYPT_MODE$_r$ is included and is set to '000' in a *Security Mode Command Message*, *General Handoff Direction Message* or *Universal Handoff Direction Message*, the mobile station is to disable dedicated channel Signaling encryption.
001	Enhanced Cellular Message Encryption Algorithm enabled
010	Rijndael Encryption Algorithm enabled
011 - 111	Reserved

ENC_KEY_SIZE – Key size used for encryption

If C_SIG_ENCRYPT_MODE is included and set to '001', or '010', the base station shall include this field and set it as follows; otherwise, the base station shall omit this field.

The base station shall set this field to the encryption key_size as shown in Table 3.7.4.5-2;

Table 3.7.4.5-2. ENC_KEY_SIZE Values

ENC_KEY_SIZE (binary)	Descriptions
000	Reserved
001	64 bits
010	128 bits
011-111	Reserved

MSG_INT_INFO_INCL – Message integrity information included indicator

If ORDQ is set to '00000111', the base station shall include this field and shall set it as follows; otherwise, the base station shall omit this field.

The base station shall set this field to '1' if the base station supports message integrity; otherwise, the base station shall set this field to '0'.

CHANGE_KEYS – Change keys indicator

If MSG_INT_INFO_INCL is included and set to '0', the base station shall omit this field; otherwise, the base station shall include this field and set it as follows:

The base station shall set this field to '0' to command the mobile station not to update the encryption key and integrity key. The base station shall set this field to '1' to command the mobile station to update the encryption key and integrity key to the latest being generated.

USE_UAK – Use UAK indicator

If MSG_INT_INFO_INCL is included and set to '0', the base station shall omit this field; otherwise, the base station shall include this field and set it as follows:

If the base station receives an authentication vector with a UAK, the base station shall set this field to '1' to indicate that the mobile station is to use UMAC; otherwise, the base station shall set this field to '0' to indicate that the mobile station is to use MAC-I.

RESERVED - Reserved bits.

The base station shall add reserved bits as needed in order to make the total length of the fields included in this order equal to an integer number of octets. The base station shall set these bits to '0'.

3.7.4.6 Periodic Pilot Measurement Request Order

The *Periodic Pilot Measurement Request Order* can be sent only on the f-dsch.

Order Specific Field	**Length (bits)**
ORDQ	8
MIN_PILOT_PWR_THRESH	5
MIN_PILOT_EC_I0_THRESH	5
INCL_SETPT	1
RESERVED	5

ORDQ - Order qualification code.

If INCL_SETPT equals '0', the base station shall set this field to a report period, in units of 0.08 seconds, in the range of '00001010' to '1111110' inclusive; otherwise, the base station shall set this field to a report period, in units of 0.08 seconds, in the range of '00000001' to '11111110' inclusive. The base station shall set this field to '11111111' to request a one time *Periodic Pilot Strength Measurement Message*.

MIN_PILOT_PWR_THRESH - The threshold of the total received E_c of the pilots in the Active Set.

If the mobile station is to report pilot strength measurements periodically to the base station irrespective of the pilot power of the Active Set, the base station shall set this field to '11111'; otherwise, the base station shall set this field to the total E_c threshold, expressed as an unsigned binary number equal to:

$$\lceil (10 \times \log_{10}(pilot\_ec\_thresh) + 120) / 2 \rceil$$

where *pilot_ec_thresh* is the threshold of the mobile station received total E_c (in mW) of the pilots in the Active Set below which the mobile station is to send the pilot strength measurements periodically to the base station.

MIN_PILOT_EC_I0_THRESH - Pilot Strength Threshold of Serving Frequency.

If the mobile station is to ignore this threshold, the base station shall set this field to '11111'; otherwise, the base station shall set this field to the total E_c/I_0 threshold, expressed as an unsigned binary number equal to:

$$\square - 20 \times \log_{10} pilot\_streng\_thresh \square,$$

where *pilot_streng_thresh* is the threshold of the total received E_c/I_0 of the pilots in Active Set (see 2.6.6.2.2) below which the mobile station is to send the pilot strength measurements periodically to the base station.

INCL_SETPT - Include Setpoint information indicator.

The base station shall set this field to '1' to indicate that the mobile station shall include outer loop E_b/N_t setpoint information in the *Periodic Pilot Strength Measurement Message*; otherwise, the base station shall set this field to '0'.

RESERVED - Reserved bits.

The base station shall set this field to '00000'.

3.7.4.7 Retry Order

The *Retry Order* can be sent on either the f-csch or on the f-dsch to indicate the requested service is rejected and specify the retry delay.

Order Specific Field	Length (bits)
ORDQ	8
RETRY_TYPE	3
RETRY_DELAY	0 or 8
RESERVED	5

ORDQ - Order qualification code.

The base station shall set this field to '00000000'.

RETRY_TYPE - Retry delay type.

The base station shall set this field specified as in Table 3.7.4.7-1.

Table 3.7.4.7-1 Retry Delay Type

Value (binary)	Retry Type	Usage
000	Clear all	The *Retry Order* is used to clear any existent retry delay
001	Origination	The *Retry Order* specifies the RETRY_DELAY for a Packet Data *Origination Message*, *Reconnect Message*, or *Enhanced Origination Message*
010	Resource Request	The *Retry Order* specifies the RETRY_DELAY for a *Resource Request Message* or *Resource Request Mini Message*
011	Supplemental Channel Request	The *Retry Order* specifies the RETRY_DELAY for a *Supplemental Channel Request Message* or *Supplemental Channel Request Mini Message*
100	Short Data Burst	The *Retry Order* specifies the RETRY_DELAY for Short Data Burst[19] (see [30], [42])
101	Origination and Short Data Burst	The *Retry Order* specifies the RETRY_DELAY for both Short Data Burst (see [30], [42]) and Packet Data *Origination Message*, *Reconnect Message*, or *Enhanced Origination Message*
100-111	Reserved	

RETRY_DELAY - Retry delay.

If RETRY_TYPE is set to '000', the base station shall omit this field. Otherwise the base station shall include this field and set it as follows:

[19] Short Data Burst can be included in *Data Burst Message* or *Reconnect Message*

If RETRY_TYPE is set to '001', the base station shall set this field to the duration of the delay interval, as shown in Table 3.7.4.7-2, during which the mobile station is not permitted to send an *Origination Message*, *Reconnect Message*, or an *Enhanced Origination Message* with a Packet Data Service Option[20]. The base station shall set this field to '00000000' to indicate that there is no retry delay or to clear a previously set retry delay.

Table 3.7.4.7-2 Retry Delay for RETRY_TYPE '001'

Bits	Description
7 (MSB)	Unit for the Retry Delay '0' – unit is 1s '1' – unit is 1 min
6 to 0	Retry Delay interval

If RETRY_TYPE is set to '010' or '011', the base station shall set this field to the duration of the delay interval in units of 320 ms during which the mobile station is not permitted to send another *Supplemental Channel Request (Mini) Message* or *Resource Request (Mini) Message*. The base station shall set RETRY_DELAY to '00000000' to indicate that there is no retry delay or to clear a previously set retry delay. The base station shall set RETRY_DELAY to '11111111' to indicate that the mobile station is to refrain from sending the request indefinitely.

If RETRY_TYPE is set to '100', the base station shall set this field to the duration of the delay interval, as shown in Table 3.7.4.7-2, during which the mobile station is not permitted to send a Short Data Burst (see [30], [42]). The base station shall set this field to '00000000' to indicate that there is no retry delay or to clear a previously set retry delay.

If RETRY_TYPE is set to '101', the base station shall set this field to the duration of the delay interval, as shown in Table 3.7.4.7-2, during which the mobile station is not permitted to send a Short Data Burst (see [30], [42]) and the mobile station is not permitted to send an *Origination Message*, *Reconnect Message*, or an *Enhanced Origination Message* with a Packet Data Service Option. The base station shall set this field to '00000000' to indicate that there is no retry delay or to clear a previously set retry delay.

RESERVED - Reserved bits.

[20] Packet data service option refers to SO 60, SO 61 or any service option in Service Option Group 4 and 5 in [30]

The base station shall set this field to ‘00000’.

3.7.4.8 Reserved.

3.7.4.9 Base Station Reject Order

The *Base Station Reject Order* can be sent on either the f-csch or on the f-dsch to indicate the base station does not accept a message from a mobile station due to encryption error, message integrity error, or both.

Order Specific Field	Length (bits)
ORDQ	8
REJECT_REASON	4
REJECTED_MSG_TYPE	8
REJECTED_MSG_SEQ	3

ORDQ - Order qualification code.

The base station shall set this field to '00000010'.

REJECT_REASON - Reason of rejection.

The base station shall set this field as specified in Table 3.7.4.9-1.

Table 3.7.4.9-1 Reject Reason Type

Value (binary)	Reject Reason	Usage
0000	The MACI field is missing	The *Base Station Reject Order* is used to indicate that the MACI field required in the message is missing.
0001	The MACI field is present but invalid	The *Base Station Reject Order* is used to indicate that the MACI field is present but is invalid.
0010	The security sequence number is invalid	The *Base Station Reject Order* is used to indicate that the security sequence number is invalid.
0011	The base station has failed to decrypt an encrypted message	The *Base Station Reject Order* is used to indicate that the base station has failed to decrypt an encrypted message from the mobile station.
0100-1111	Reserved	Reserved

REJECTED_MSG_TYPE - Message type of the rejected message.

The base station shall set this field to the value of the MSG_TYPE or the MSG_ID (see [4]) field of the message being rejected.

If the MSG_TYPE or the MSG_ID (see [4]) field is not 8 bits, the base station shall set the least significant bits of this field to the value of the MSG_TYPE field and set all the remaining bits to '0'.

REJECTED_MSG_SEQ - The Layer 2 message sequence number (see [4]) of the rejected message.

The base station shall set this field to the Layer 2 message sequence number (see [4]) of the rejected message.

3.7.4.10 BCMC Order

The *BCMC Order* is sent on f-csch or f-dsch to provide information on the requested BCMC flows.

Order Specific Field	**Length (bits)**
ORDQ	8
ALL_BCMC_FLOWS_IND	1
CLEAR_ALL_RETRY_DELAY	0 or 1
ALL_BCMC_REASON	0 or 4
ALL_BCMC_RETRY_DELAY	0 or 8
NUM_BCMC_PROGRAMS	0 or 6

If NUM_BCMC_PROGRAMS field is included, NUM_BCMC_PROGRAMS plus one occurrences of the following record

{ (NUM_BCMC_PROGRAMS+1)

BCMC_PROGRAM_ID_LEN	5
BCMC_PROGRAM_ID	BCMC_PROGRAM_ID_LEN+1
BCMC_FLOW_DISCRIMINATOR_LEN	3
NUM_FLOW_DISCRIMINATOR	BCMC_FLOW_DISCRIMINATOR_LEN

NUM_FLOW_DISCRIMINATOR+1 or 1 occurrences of the following variable length record:

{ (NUM_FLOW_DISCRIMINATOR+1) or 1

BCMC_FLOW_DISCRIMINATOR	BCMC_FLOW_DISCRIMINATOR_LEN
SAME_AS_PREVIOUS_BCMC_FLOW	1
CLEAR_RETRY_DELAY	0 or 1
BCMC_REASON	0 or 4
BCMC_RETRY_DELAY	0 or 8

} (NUM_FLOW_DISCRIMINATOR+1) or 1

} (NUM_BCMC_PROGRAMS+1)

ORDQ - Order qualification code.

The base station shall set this field to '00000000'.

ALL_BCMC_FLOWS_IND – All BCMC flows indicator.

The base station shall set this field to ‘1’ to indicate the ALL_BCMC_REASON applies to all flows for which mobile station is expecting a response; otherwise the base station shall set this field to ‘0’.

CLEAR_ALL_RETRY_DELAY - Clear all retry delay indicator

If ALL_BCMC_FLOWS_IND is set to ‘0’, the base station shall omit this field; otherwise, the base station shall include this field and set it as follows:

The base station shall set this field to ‘1’ to indicate that the mobile station should clear all retry delays associated with each BCMC Flow; otherwise the base station shall set this field to ‘0’.

ALL_BCMC_REASON - All BCMC reason.

If ALL_BCMC_FLOWS_IND is set to ‘0’ or if CLEAR_ALL_RETRY_DELAY is set to ‘1’, the base station shall omit this field; otherwise, the base station shall include this field and set it as follows:

The base station shall set this field as specified in Table 3.7.4.10-1 to indicate the purpose of this order.

Table 3.7.4.10-1 BCMC Reason

Value (binary)	BCMC_REASON/ALL_BCMC_REASON
0000	BCMC_FLOW_ID not available
0001	BCMC_FLOW_ID not transmitted
0010	BCMC_FLOW_ID available in idle state
0011	BCMC Registration Accepted; requested BCMC flow will be transmitted at a later time
0100	Authorization failure
0101	Retry later
0110-1111	Reserved

ALL_BCMC_RETRY_DELAY - All BCMC retry delay.

If the ALL_BCMC_REASON field is not included or is included and is not set to '0101', the base station shall omit this field; otherwise, the base station shall include this field and set it as follows:

The base station shall set this field to the duration of the delay interval, as shown in Table 3.7.4.10-2, during which the mobile station is not permitted to request *any* BCMC flows. The base station shall not set this field to '00000000'.

Table 3.7.4.10-2 BCMC Retry Delay

Bits	Description
7 (MSB)	Unit for the Retry Delay '0' – unit is 1s '1' – unit is 1 min
6 to 0	BCMC Retry Delay interval

NUM_BCMC_PROGRAMS – Number of BCMC programs included.

If ALL_BCMC_FLOWS_IND is set to '1', the base station shall omit this field; otherwise, the base station shall include this field and set it as follows.

The base station shall set this field to the number of BCMC programs included in this message minus one.

If the NUM_BCMC_PROGRAMS field is included, the base station shall include NUM_BCMC_PROGRAMS plus one occurrences of the following record:

BCMC_PROGRAM_ID_LEN - Length of BCMC_PROGRAM_ID field

The base station shall set this field to one less than the length in bits of the BCMC_PROGRAM_ID of this program.

BCMC_PROGRAM_ID - BCMC program Identifier

The length of this field shall be one more than the value of BCMC_PROGRAM_ID_LEN bits.

The base station shall set this field to the BCMC program identifier of this program.

BCMC_FLOW_DISCRIMINATOR_LEN - Length of BCMC_FLOW_DISCRIMINATOR field

The base station shall set this field to the length in bits of the BCMC_FLOW_DISCRIMINATOR of this program.

NUM_FLOW_DISCRIMINATOR - Number of BCMC flow discriminators.

The length of this field shall be determined by the value of the BCMC_FLOW_DISCRIMINATOR_LEN as follows: if BCMC_FLOW_DISCRIMINATOR_LEN is set to '000', this field is omitted; otherwise, the length of this field shall be BCMC_FLOW_DISCRIMINATOR_LEN bits.

The base station shall set this field to the number of flow discriminators included for this program minus one.

If NUM_FLOW_DISCRIMINATOR field is included, the base station shall include NUM_FLOW_DISCRIMINATOR+1 occurrences of the following variable length record; otherwise, the base station shall include 1 occurrence of the following variable length record:

BCMC_FLOW_DISCRIMINATOR – BCMC Flow discriminator.

The length of this field shall be determined by the value of the BCMC_FLOW_DISCRIMINATOR_LEN as follows: if BCMC_FLOW_DISCRIMINATOR_LEN is set to '000', this field is omitted; otherwise, the length of this field shall be BCMC_FLOW_DISCRIMINATOR_LEN bits.

The base station shall set this field to the discriminator of the BCMC flow.

SAME_AS_PREVIOUS_BCMC_FLOW – Same As Previous BCMC Flow Identifier.

If CLEAR_RETRY_DELAY, BCMC_REASON and BCMC_RETRY_DELAY are the same for this BCMC_FLOW_ID (see 2.6.13.11) as for the previous BCMC_FLOW_ID, the base station shall set this field to '1'; otherwise, the base station shall set this field to '0'.

CLEAR_RETRY_DELAY - Clear retry delay indicator

If SAME_AS_PREVIOUS_BCMC_FLOW is set to '1', the base station shall omit this field; otherwise, the base station shall set this field as follows:

The base station shall set this field to '1' to indicate that the mobile station should clear retry delay associated with this BCMC Flow; otherwise the base station shall set this field to '0'.

BCMC_REASON - BCMC reason.

If SAME_AS_PREVIOUS_BCMC_FLOW is set to '1' or if CLEAR_RETRY_DELAY is set to '1', the base station shall omit this field; otherwise, the base station shall set this field as follows:

The base station shall set this field as specified in Table 3.7.4.10-1 to indicate the purpose for this order.

BCMC_RETRY_DELAY - BCMC retry delay.

If the BCMC_REASON field is not included or is included and is not set to '0101', the base station shall omit this field; otherwise, the base station shall include this field and set it as follows:

The base station shall set this field to the duration of the delay interval, as shown in Table 3.7.4.10-2, during which the mobile station is not permitted to request this BCMC_FLOW_ID. The base station shall not set this field to '00000000'.

3.7.4.11 Fast Call Setup Order

Order Specific Field	Length (bits)
ORDQ	8
RSC_MODE_SUPPORTED	1
MAX_RSC_END_TIME_UNIT	0 or 2
MAX_RSC_END_TIME_VALUE	0 or 4
REQ_RSCI	0 or 4
IGNORE_QPCH	0 or 1
RER_MODE_INCL	1
RER_MODE_ENABLED	0 or 1
RER_MAX_NUM_MSG_IDX	0 or 3
RER_TIME	0 or 3
RER_TIME_UNIT	0 or 2
MAX_RER_PILOT_LIST_SIZE	0 or 3
TKZ_MODE_INCL	1
TKZ_MODE_ENABLED	0 or 1
TKZ_MAX_NUM_MSG_IDX	0 or 3
TKZ_UPDATE_PRD	0 or 4
TKZ_LIST_LEN	0 or 4
TKZ_TIMER	0 or 8

ORDQ - Order qualification code.

The base station shall set this field to the ORDQ value shown in Table 3.7.4-1.

RSC_MODE_SUPPORTED – Reduced slot cycle mode supported indicator.

The base station shall set this field to ‘1’ if it supports the reduced slot cycle mode; otherwise, the base station shall set this field to ‘0’.

MAX_RSC_END_TIME_UNIT – Maximum reduced slot cycle mode end time unit.

If RSC_MODE_SUPPORTED is equal to ‘0’, the base station shall omit this field; otherwise, the base station shall set this field according to Table 2.7.3.5-1 to indicate the units of the MAX_RSC_END_TIME_VALUE field.

MAX_RSC_END_TIME_VALUE – Maximum reduced slot cycle mode end time value.

If RSC_MODE_SUPPORTED is equal to ‘0’, the base station shall omit this field; otherwise, the base station shall include this field and set it as follows:

The base station shall set this field to the maximum system time, in units of time specified by MAX_RSC_END_TIME_UNIT (modulo 16), at which the mobile station is to exit the reduced slot cycle mode.

REQ_RSCI – Requested reduced slot cycle index.

If ORDQ is equal to ‘00000000’ and RSC_MODE_SUPPORTED is equal to ‘1’, the base station shall set this field as specified in Table 2.7.1.3.2.1-8 to the reduced slot cycle index value that it is requesting the mobile station to operate with; otherwise, the base station shall omit this field.

IGNORE_QPCH – Ignore QPCH indicators.

If RSC_MODE_SUPPORTED is equal to ‘0’, the base station shall omit this field; otherwise, the base station shall include this field and set it as follows:

The base station shall set this field to ‘1’ to indicate to the mobile station that it is not to check its assigned paging indicators on the QPCH while operating in the reduced slot cycle mode if the reduced slot cycle index is -3 or -4; otherwise, the base station shall set this field to ‘0’.

RER_MODE_INCL – Radio environment reporting mode information included indicator.

If radio environment reporting mode related fields are included in this message, the base station shall set this field to ‘1’; otherwise, the base station shall set this field to ‘0’.

RER_MODE_ENABLED - Radio environment reporting mode enabled indicator.

If RER_MODE_INCL is set to ‘0’, the base station shall omit this field; otherwise, the base station shall include this field and set it as follows:

If the radio environment reporting mode is enabled in this message, the base station shall set this field to ‘1’; otherwise, the base station shall set this field to ‘0’.

RER_MAX_NUM_MSG_IDX - Maximum number of *Radio Environment Messages* permitted while in radio environment reporting mode index.

If RER_MODE_ENABLED is not included, or is included and set to ‘0’, the base station shall omit this field; otherwise, the base station shall include this field and set it as follows:

The base station shall set this field to the maximum number of *Radio Environment Messages* that the mobile station is allowed to transmit while in radio environment reporting mode, expressed as $2^{RER\_MAX\_NUM\_MSG\_IDX}$ where 0 • RER_MAX_NUM_MSG_IDX • 6. If the mobile station is allowed to transmit an unlimited number of *Radio Environment Messages*, then the base station shall set this field to ‘111’.

RER_TIME - Radio environment report timer value.

If RER_MODE_ENABLED is not included, or is included and set to ‘0’, the base station shall omit this field; otherwise, the base station shall include this field and set it as follows:

The base station shall set this field to the value of the radio-environment report timer, expressed as 2^{RER_TIME} where 0 • RER_TIME • 6 and in units of RER_TIME_UNIT. If the value of the radio-environment report timer is infinite, then the base station shall set this field to ‘111’.

RER_TIME_UNIT - Radio environment report timer value units.

If RER_MODE_ENABLED is included and set to ‘1’, and RER_TIME is not set to ‘111’, the base station shall include this field and shall set it according to Table 3.7.3.3.2.34-5; otherwise, the base station shall omit this field.

MAX_RER_PILOT_LIST_SIZE - Maximum number of pilots to maintain in RER_PILOT_LIST.

If RER_MODE_ENABLED is not included, or is included and set to ‘0’, the base station shall omit this field; otherwise, the base station shall include this field and set it as follows:

The base station shall set this field to the maximum number of pilots that the mobile station is to maintain in RER_PILOT_LIST (see [4]). The base station shall set this field to a value in the range 1 to 6 inclusive.

TKZ_MODE_INCL – Tracking zone mode information included indicator.

If tracking zone mode related fields are included in this message, the base station shall set this field to ‘1’; otherwise, the base station shall set this field to ‘0’.

TKZ_MODE_ENABLED - Tracking zone mode enabled indicator.

If TKZ_MODE_INCL is set to ‘0’, the base station shall omit this field; otherwise, the base station shall include this field and set it as follows:

If the tracking zone mode is enabled in this message, the base station shall set this field to ‘1’; otherwise, the base station shall set this field to ‘0’.

TKZ_MAX_NUM_MSG_IDX - Maximum number of *Radio Environment Messages* permitted while in tracking zone mode index.

If TKZ_MODE_ENABLED is not included, or is included and set to '0', the base station shall omit this field; otherwise, the base station shall include this field and set it as follows:

The base station shall set this field to the maximum number of *Radio Environment Messages* that the mobile station is allowed to transmit while in tracking zone mode, expressed as $2^{TKZ\_MAX\_NUM\_MSG\_IDX}$ where 0 • TKZ_MAX_NUM_MSG_IDX • 6. If the mobile station is allowed to transmit an unlimited number of *Radio Environment Messages*, then the base station shall set this field to '111'.

TKZ_UPDATE_PRD - Tracking zone update period.

If TKZ_MODE_ENABLED is not included, or is included and set to '0', the base station shall omit this field; otherwise, the base station shall include this field and set it as follows:

The base station shall set this field such that the desired tracking zone update timer value is $2^{TKZ\_UPDATE\_PRD+6}$ seconds. If the value of the timer is infinite, then the base station shall set this field to '1111'.

TKZ_LIST_LEN - Tracking zone list length.

If TKZ_MODE_ENABLED is not included, or is included and set to '0', the base station shall omit this field; otherwise, the base station shall include this field and set it as follows:

The base station shall set this field to the length of the tracking zone list minus one.

TKZ_TIMER - Tracking zone timer.

If TKZ_MODE_ENABLED is not included, or is included and set to '0', the base station shall omit this field; otherwise, the base station shall include this field and set it as follows:

The base station shall set this field to the value of the tracking zone timer (in units of seconds) minus one.

3.7.4.12 Service Status Order

The *Service Status Order* can be sent on f-csch or f-dsch to indicate the status of the services requested by the mobile station.

Order Specific Field	Length (bits)
ORDQ	8
SR_ID_BITMAP	6
{ (weight of SR_ID_BITMAP)	
SERVICE_STATUS	3
} (weight of SR_ID_BITMAP)	
RESERVED	0 – 7 (as needed)

ORDQ – Order qualification code.

The base station shall set this field to '00000000'.

SR_ID_BITMAP – Service Reference Identifier Bitmap.

This field consists of the subfields defined in Table 3.7.4.12-1. The base station shall set a subfield to '1' to indicate that the service status information corresponding to the service reference identifier is included in this message; otherwise, the base station shall set the subfield to '0'.

Table 3.7.4.12-1. SR_ID_BITMAP Subfields.

Subfield	Length (bits)	Subfield Description
SR_ID_1	1	SR_ID 1 service status included indicator
SR_ID_2	1	SR_ID 2 service status included indicator
SR_ID_3	1	SR_ID 3 service status included indicator
SR_ID_4	1	SR_ID 4 service status included indicator
SR_ID_5	1	SR_ID 5 service status included indicator
SR_ID_6	1	SR_ID 6 service status included indicator

The base station shall include the following subrecord for each bit set to '1' in SR_ID_BITMAP:

SERVICE_STATUS – Service Status.

The base station shall set this field to the SERVICE_STATUS value shown in Table 3.7.4.12-2 indicating the service status corresponding to this service reference identifier.

Table 3.7.4.12-2. Service Status Values

SERVICE_STATUS Value (binary)	Service Status
000	Service request accepted
001	Service request rejected
All other values are reserved.	

RESERVED - Reserved bits.

The base station shall add reserved bits as needed in order to make the total length of the fields included in this order equal to an integer number of octets. The base station shall set these bits to '0'.

3.7.4.13 Location Services Order

Order Specific Field	Length (bits)
ORDQ	8
REGULATORY_IND_INCL	1
REGULATORY_IND	0 or 2

ORDQ - Order qualification code.

The base station shall set this field to the ORDQ value shown in Table 3.7.4-1.

REGULATORY_IND_INCL - Regulatory indicator included.

The base station shall set this field to '0' to indicate that the mobile station is to release all current location sessions associated with *Data Burst Message* transport; the base station shall set this field to '1' to indicate that the mobile station is to release the current location session that is associated with *Data Burst Message* transport corresponding to the regulatory type specified by this message.

REGULATORY_IND - Regulatory indication.

If the REGULATORY_IND_INCL field is set to '0', the base station shall omit this field; otherwise, the base station shall include this field and set it as follows:

The base station shall set this field to indicate the regulatory type, as specified in [43], of the position location session that the mobile station is to release.

3.7.5 Information Records

On the f-csch, information records may be included in the *Feature Notification Message*. On the f-dsch, information records may be included in the *Alert with Information Message*, the *Flash with Information Message*, the *Extended Alert with Information Message*, the *Extended Flash with Information Message*, the *Service Request Message*, the *Service Response Message*, the *Service Connect Message*, the *General Handoff Direction Message*, and the *Universal Handoff Direction Message*. Table 3.7.5-1 lists the information record type values that may be used with each message type. The following sections describe the contents of each of the record types in detail.

Table 3.7.5-1. Information Record Types (Part 1 of 3)

Information Record	Record Type (binary)	Message Type	f-csch	f-dsch	P_REV_IN_USE[21]
Display	00000001	FNM	Y	N	All
		AWI	N	Y	
		FWI	N	Y	
Called Party Number	00000010	FNM	Y	N	All
		AWI	N	Y	
		FWI	N	Y	
Calling Party Number	00000011	FNM	Y	N	All
		AWI	N	Y	
		FWI	N	Y	
Connected Number	00000100	FWI	N	Y	All
Signal	00000101	FNM	Y	N	All
		AWI	N	Y	
		FWI	N	Y	
Message Waiting	00000110	FNM	Y	N	All
		AWI	N	Y	
		FWI	N	Y	
Service Configuration	00000111	SRQM	N	Y	1, ≥ 3
		SRPM	N	Y	
		SCM	N	Y	
		GHDM	N	Y	
		UHDM	N	Y	
Called Party Subaddress	00001000	FNM	Y	N	≥ 4
		AWI	N	Y	
		FWI	N	Y	

[21] P_REV_IN_USE equal to “All” implies all values applicable to the Band Class.

Table 3.7.5-1. Information Record Types (Part 2 of 3)

Information Record	Record Type (binary)	Message Type	f-csch	f-dsch	P_REV_IN_USE
Calling Party Subaddress	00001001	FNM	Y	N	≥ 4
		AWI	N	Y	
		FWI	N	Y	
Connected Subaddress	00001010	FWI	N	Y	≥ 4
Redirecting Number	00001011	FNM	Y	N	≥ 4
		AWI	N	Y	
		FWI	N	Y	
Redirecting Subaddress	00001100	FNM	Y	N	≥ 4
		AWI	N	Y	
		FWI	N	Y	
Meter Pulses	00001101	AWI	N	Y	≥ 4
		FWI	N	Y	
Parametric Alerting	00001110	FNM	Y	N	≥ 4
		AWI	N	Y	
		FWI	N	Y	
Line Control	00001111	AWI	N	Y	≥ 4
		FWI	N	Y	
Extended Display	00010000	FNM	Y	N	≥ 4
		AWI	N	Y	
		FWI	N	Y	

Table 3.7.5-1. Information Record Types (Part 3 of 3)

Information Record	Record Type (binary)	Message Type	f-csch	f-dsch	P_REV_IN_USE
Non-Negotiable Service Configuration	00010011	SCM	N	Y	≥ 6
		GHDM	N	Y	
		UHDM	N	Y	
Multiple Character Extended Display	00010100	FNM	Y	N	≥ 7 but < 9
		AWI	N	Y	
		FWI	N	Y	
Call Waiting Indicator	00010101	AWI	N	Y	≥ 7
		FWI	N	Y	
Enhanced Multiple Character Extended Display	00010110	FNM	Y	N	≥ 9
		AWI	N	Y	
		FWI	N	Y	
Extended Record Type – International	11111110	Country-Specific			≥ 4

All other record type values are reserved.

"AWI" refers to either the *Alert With Information Message* or the *Extended Alert With Information Message*.

"FWI" refers to either the *Flash With Information Message* or the *Extended Flash With Information Message*.

3.7.5.1 Display

This information record allows the network to supply display information that may be displayed by the mobile station.

Type-Specific Field	**Length (bits)**
One or more occurrences of the following field:	
{	
CHARi	8
}	

CHARi - Character.

The base station shall include one occurrence of this field for each character to be displayed. The base station shall set each occurrence of this field to the ASCII representation corresponding to the character entered, as specified in [9], with the most significant bit set to ‘0’.

3.7.5.2 Called Party Number

This information record identifies the called party's number.

Type-Specific Field	Length (bits)
NUMBER_TYPE	3
NUMBER_PLAN	4
Zero or more occurrences of the following field:	
{	
CHARi	8
}	
RESERVED	1

NUMBER_TYPE - Type of number.

The base station shall set this field to the NUMBER_TYPE value shown in Table 2.7.1.3.2.4-2 corresponding to the type of the called number, as defined in [7], Section 4.5.9.

NUMBER_PLAN - Numbering plan.

The base station shall set this field to the NUMBER_PLAN value shown in Table 2.7.1.3.2.4-3 corresponding to the numbering plan used for the called number, as defined in [7], Section 4.5.9.

CHARi - Character.

The base station shall include one occurrence of this field for each character in the called number. The base station shall set each occurrence of this field to the ASCII representation corresponding to the character, as specified in [9], with the most significant bit set to '0'.

RESERVED - Reserved bits.

The base station shall set this field to '0'.

3.7.5.3 Calling Party Number

This information record identifies the calling party's number.

Type-Specific Field	Length (bits)
NUMBER_TYPE	3
NUMBER_PLAN	4
PI	2
SI	2
Zero or more occurrences of the following field:	
{	
CHARi	8
}	
RESERVED	5

NUMBER_TYPE - Type of number.

The base station shall set this field to the NUMBER_TYPE value shown in Table 2.7.1.3.2.4-2 corresponding to the type of the calling number, as defined in [7], Section 4.5.9.

NUMBER_PLAN - Numbering plan.

The base station shall set this field to the NUMBER_PLAN value shown in Table 2.7.1.3.2.4-3 corresponding to the numbering plan used for the calling number, as defined in [7], Section 4.5.9.

PI - Presentation indicator.

This field indicates whether or not the calling number should be displayed.

The base station shall set this field to the PI value shown in Table 2.7.4.4-1 corresponding to the presentation indicator, as defined in [7], Section 4.5.9.

SI - Screening indicator.

This field indicates how the calling number was screened.

The base station shall set this field to the SI value shown in Table 2.7.4.4-2 corresponding to the screening indicator value, as defined in [7], Section 4.5.9.

CHARi - Character.

The base stations shall include one occurrence of this field for each character in the calling number. The base station shall set each occurrence of this field to the ASCII representation corresponding to the character, as specified in [9], with the most significant bit set to ‘0’.

RESERVED - Reserved bits.

The base station shall set this field to ‘00000’.

3.7.5.4 Connected Number

This information record identifies the responding party to a call.

Type-Specific Field	Length (bits)
NUMBER_TYPE	3
NUMBER_PLAN	4
PI	2
SI	2
Zero or more occurrences of the following field:	
{	
CHARi	8
}	
RESERVED	5

NUMBER_TYPE - Type of number.

The base station shall set this field to the NUMBER_TYPE value shown in Table 2.7.1.3.2.4-2 corresponding to the type of the connected number, as defined in [7], Section 4.5.9.

NUMBER_PLAN - Numbering plan.

The base station shall set this field to the NUMBER_PLAN value shown in Table 2.7.1.3.2.4-3 corresponding to the numbering plan used for the connected number, as defined in [7], Section 4.5.9.

PI - Presentation indicator.

This field indicates whether or not the connected number should be displayed.

The base station shall set this field to the PI value shown in Table 2.7.4.4-1 corresponding to the presentation indicator, as defined in [7], Section 4.5.9.

SI - Screening indicator.

This field indicates how the connected number was screened.

The base station shall set this field to the SI value shown in Table 2.7.4.4-2 corresponding to the screening indicator value, as defined in [7], Section 4.5.9.

CHARi - Character.

The base station shall include one occurrence of this field for each character in the connected number. The base station shall set each occurrence of this field to the ASCII representation corresponding to the character, as specified in [9], with the most significant bit set to ‘0’.

RESERVED - Reserved bits.

The base station shall set this field to ‘00000’.

3.7.5.5 Signal

This information record allows the network to convey information to a user by means of tones and other alerting signals.

The Standard Alert is defined as SIGNAL_TYPE = '10', ALERT_PITCH = '00' and SIGNAL = '000001'.

Type-Specific Field	Length (bits)
SIGNAL_TYPE	2
ALERT_PITCH	2
SIGNAL	6
RESERVED	6

SIGNAL_TYPE - Signal type.

The base station shall set this field to the signal type value shown in Table 3.7.5.5-1.

Table 3.7.5.5-1. Signal Type

Description	SIGNAL_TYPE (binary)
Tone signal	00
ISDN Alerting	01
IS-54B Alerting	10
Reserved	11

ALERT_PITCH - Pitch of the alerting signal.

This field is ignored by the mobile station unless SIGNAL_TYPE is '10', IS-54B Alerting.

If SIGNAL_TYPE is '10', the base station shall set this field to the alert pitch shown in Table 3.7.5.5-2; otherwise, the base station shall set this field to '00'.

Table 3.7.5.5-2. Alert Pitch

Description	ALERT_PITCH (binary)
Medium pitch (standard alert)	00
High pitch	01
Low pitch	10
Reserved	11

SIGNAL - Signal code.

The base station shall set this field to the specific signal desired. If SIGNAL_TYPE is '00', the base station shall set this field as described in Table 3.7.5.5-3. If SIGNAL_TYPE is '01', the base station shall set this field as described in Table 3.7.5.5-4. If SIGNAL_TYPE is '10', the base station shall set this field as described in Table 3.7.5.5-5.

Table 3.7.5.5-3. Tone Signals (SIGNAL_TYPE = '00')

Description	SIGNAL (binary)
Dial tone on: a continuous 350 Hz tone added to a 440 Hz tone.	000000
Ring back tone on: a 440 Hz tone added to a 480 Hz tone repeated in a 2 s on, 4 s off pattern.	000001
Intercept tone on: alternating 440 Hz and 620 Hz tones, each on for 250 ms.	000010
Abbreviated intercept: alternating 440 Hz and 620 Hz tones, each on for 250 ms, repeated for four seconds.	000011
Network congestion (reorder) tone on: a 480 Hz tone added to a 620 Hz tone repeated in a 250 ms on, 250 ms off cycle.	000100
Abbreviated network congestion (reorder): a 480 Hz tone added to a 620 Hz tone repeated in a 250 ms on, 250 ms off cycle for four seconds.	000101
Busy tone on: a 480 Hz tone added to a 620 Hz tone repeated in a 500 ms on, 500 ms off cycle.	000110
Confirm tone on: a 350 Hz tone added to a 440 Hz tone repeated 3 times in a 100 ms on, 100 ms off cycle.	000111
Answer tone on: answer tone is not presently used in North American networks.	001000
Call waiting tone on: a 300 ms burst of 440 Hz tone.	001001
Pip tone on: four bursts of 480 Hz tone (0.1 s on, 0.1 s off).	001010
Tones off	111111
All other SIGNAL values are reserved	

Table 3.7.5.5-4. ISDN Alerting (SIGNAL_TYPE = '01')

Description	**SIGNAL (binary)**
Normal Alerting: 2.0 s on, 4.0 s off, repeating	000000
Intergroup Alerting: 0.8 s on, 0.4 s off, 0.8 s on, 4.0 s off, repeating	000001
Special/Priority Alerting: 0.4 s on, 0.2 s off, 0.4 s on, 0.2 s off, 0.8 s on, 4.0 s off, repeating	000010
Reserved (ISDN Alerting pattern 3)	000011
"Ping ring": single burst of 500 ms	000100
Reserved (ISDN Alerting pattern 5)	000101
Reserved (ISDN Alerting pattern 6)	000110
Reserved (ISDN Alerting pattern 7)	000111
Alerting off	001111
All other SIGNAL values are reserved	

Table 3.7.5.5-5. IS-54B Alerting (SIGNAL_TYPE = '10')

Description	**SIGNAL (binary)**
No Tone: Off	000000
Long: 2.0 s on, 4.0 s off, repeating (standard alert)	000001
Short-Short: 0.8 s on, 0.4 s off, 0.8 s on, 4.0 s off, repeating	000010
Short-Short-Long: 0.4 s on, 0.2 s off, 0.4 s on, 0.2 s off, 0.8 s on, 4.0 s off, repeating	000011
Short-Short-2: 1.0 s on, 1.0 s off, 1.0 s on, 3.0 s off, repeating.	000100
Short-Long-Short: 0.5 s on, 0.5 s off, 1.0 s on, 0.5 s off, 0.5 s on, 3.0 s off, repeating.	000101
Short-Short-Short-Short: 0.5 s on, 0.5 s off, 0.5 s on, 0.5 s off, 0.5 s on, 0.5 s off, 0.5 s on, 2.5 s off, repeating.	000110
PBX Long: 1.0 s on, 2.0 s off, repeating.	000111
PBX Short-Short: 0.4 s on, 0.2 s off, 0.4 s on, 2.0 off, repeating.	001000
PBX Short-Short-Long: 0.4 s on, 0.2 s off, 0.4 s on, 0.2 s off, 0.8 s on, 1.0 s off, repeating.	001001
PBX Short-Long-Short: 0.4 s on, 0.2 s off, 0.8 s on, 0.2 s off, 0.4 s on, 1.0 s off, repeating.	001010
PBX Short-Short-Short-Short: 0.4 s on, 0.2 s off, 0.4 s on, 0.2 s off, 0.4 s on, 0.2 s off, 0.4 s on, 0.8 s off, repeating.	001011
Pip-Pip-Pip-Pip: 0.1 s on, 0.1 s off, 0.1 s on, 0.1 s off, 0.1 s on, 0.1 s off, 0.1 s on.	001100
All other SIGNAL values are reserved	

RESERVED - Reserved bits.

The base station shall set this field to '000000'.

3.7.5.6 Message Waiting

This information record conveys to the user the number of messages waiting.

Type-Specific Field	Length (bits)
MSG_COUNT	8

MSG_COUNT - Number of waiting messages.

The base station shall set this field to the number of messages waiting.

3.7.5.7 Service Configuration

For the mobile station, this record is included in a *Status Response Message* to return the current service configuration, and in a *Service Request Message* and a *Service Response Message* to propose a service configuration.

For a base station, this record is included in a *Service Request Message* and a *Service Response Message* to propose a service configuration. It is included in a *Service Connect Message* to specify an actual service configuration to be used. It can be included in a *General Handoff Direction Message* and *Universal Handoff Direction Message* to specify an actual service configuration to be used.

Type-Specific Field	**Length (bits)**
FOR_MUX_OPTION	16
REV_MUX_OPTION	16
FOR_NUM_BITS	8
REV_NUM_BITS	8
NUM_CON_REC	8

NUM_CON_REC occurrences of the following variable-length record:

{ (NUM_CON_REC)

RECORD_LEN	8
CON_REF	8
SERVICE_OPTION	16
FOR_TRAFFIC	4
REV_TRAFFIC	4
UI_ENCRYPT_MODE	3
SR_ID	3
RLP_INFO_INCL	1
RLP_BLOB_LEN	0 or 4
RLP_BLOB	0 or (8 × RLP_BLOB_LEN)
QOS_PARMS_INCL	1
QOS_PARMS_LEN	0 or 5
QOS_PARMS	0 or variable
QOS_RESERVED	0-7
RESERVED	0-7 (as needed)

} (NUM_CON_REC)

FCH_CC_INCL	1
FCH_FRAME_SIZE	0 or 1
FOR_FCH_RC	0 or 5
REV_FCH_RC	0 or 5
DCCH_CC_INCL	1
DCCH_FRAME_SIZE	0 or 2
FOR_DCCH_RC	0 or 5
REV_DCCH_RC	0 or 5

(continues on next page)

Type-Specific Field	Length (bits)
FOR_SCH_CC_INCL	1
NUM_FOR_SCH	0 or 2

NUM_FOR_SCH occurrences of the following record

{ (NUM_FOR_SCH)

FOR_SCH_ID	2
FOR_SCH_MUX	16
SCH_CC_Type-specific field	Variable (see 3.7.5.7.1)

} (NUM_FOR_SCH)

REV_SCH_CC_INCL	1
NUM_REV_SCH	0 or 2

NUM_REV_SCH occurrences of the following record

{ (NUM_REV_SCH)

REV_SCH_ID	2
REV_SCH_MUX	16
SCH_CC_Type-specific field	Variable (see 3.7.5.7.1)

} (NUM_REV_SCH)

FCH_DCCH_MUX_OPTION_IND	2
FOR_DCCH_MUX_OPTION	0 or 16
REV_DCCH_MUX_OPTION	0 or 16
FOR_PDCH_CC_INCL	1
FOR_PDCH_MUX_OPTION	0 or 16
FOR_PDCH_RC	0 or 5
REV_PDCH_CC_INCL	1
REV_PDCH_MUX_OPTION_HIGH_RATE	0 or 16
REV_PDCH_MUX_OPTION_LOW_RATE	0 or 16
REV_PDCH_RC	0 or 5
RESERVED	0-7 (as needed)

FOR_MUX_OPTION - Forward multiplex option.

If $P\_REV\_IN\_USE_S$ is less than eight, the mobile station shall set this field as follows:

For a *Status Response Message*, the mobile station shall set this field to the number of the multiplex option for the Forward Fundamental Channel, Forward Dedicated Control Channel, or both, if both are present (e.g., 1 corresponds to Multiplex Option 1).

For a *Service Request Message* and a *Service Response Message*, the mobile station shall set this field to the number of the multiplex option for the Forward Fundamental Channel, Forward Dedicated Control Channel, or both, if both are present.

If $P\_REV\_IN\_USE_S$ is greater than or equal to eight, the mobile station shall set this field as follows:

For a *Status Response Message*, the mobile station shall set this field to the number of the multiplex option for the Forward Fundamental Channel, Forward Dedicated Control Channel, or both (e.g., 1 corresponds to Multiplex Option 1), according to the value as specified by FCH_DCCH_MUX_OPTION_IND.

For a *Service Request Message* and a *Service Response Message*, the mobile station shall set this field to the number of the multiplex option for the Forward Fundamental Channel, Forward Dedicated Control Channel, or both, according to the value as specified by FCH_DCCH_MUX_OPTION_IND.

If neither the Forward Fundamental Channel nor Forward Dedicated Control Channel configuration is assigned, then the mobile station shall set this field to 0.

If MOB_P_REV is less than eight, the base station shall set this field as follows:

For a *Service Request Message* and a *Service Response Message*, the base station shall set this field to the number of the multiplex option for the Forward Fundamental Channel, Forward Dedicated Control Channel, or both, if both are present.

For a *Service Connect Message*, *General Handoff Direction Message*, and a *Universal Handoff Direction Message*, the base station shall set this field to the number of the multiplex option for the Forward Fundamental Channel, Forward Dedicated Control Channel, or both, if both are present.

If MOB_P_REV is greater than or equal to eight, the base station shall set this field as follows:

For a *Service Request Message* and a *Service Response Message*, the base station shall set this field to the number of the multiplex option for the Forward Fundamental Channel, Forward Dedicated Control Channel, or both, according to the value as specified by FCH_DCCH_MUX_OPTION_IND.

For a *Service Connect Message*, *General Handoff Direction Message*, and a *Universal Handoff Direction Message*, the base station shall set this field to the number of the multiplex option for the Forward Fundamental Channel, Forward Dedicated Control Channel, or both, according to the value as specified by FCH_DCCH_MUX_OPTION_IND.

If neither the Forward Fundamental Channel nor Forward Dedicated Control Channel configuration is assigned, the base station shall set this field to 0.

REV_MUX_OPTION - Reverse multiplex option.

If $P\_REV\_IN\_USE_S$ is less than eight, the mobile station shall set this field as follows:

For a *Status Response Message*, the mobile station shall set this field to the number of the multiplex option for the Reverse Fundamental Channel, Reverse Dedicated Control Channel, or both, if both are present (e.g., 1 corresponds to Multiplex Option 1).

For a *Service Request Message* and a *Service Response Message*, the mobile station shall set this field to the number of the multiplex option for the Reverse Fundamental Channel, Reverse Dedicated Control Channel, or both, if both are present.

If $P\_REV\_IN\_USE_S$ is greater than or equal to eight, the mobile station shall set this field as follows:

For a *Status Response Message*, the mobile station shall set this field to the number of the multiplex option for the Reverse Fundamental Channel, Reverse Dedicated Control Channel, or both [e.g., 1 corresponds to Multiplex Option 1), according to the value as specified by FCH_DCCH_MUX_OPTION_IND.

For a *Service Request Message* and a *Service Response Message*, the mobile station shall set this field to the number of the multiplex option for the Reverse Fundamental Channel, Reverse Dedicated Control Channel, or both, according to the value as specified by FCH_DCCH_MUX_OPTION_IND.

If neither the Reverse Fundamental Channel nor Reverse Dedicated Control Channel configuration is assigned, the mobile station shall set this field to 0.

If MOB_P_REV is less than eight, the base station shall set this field as follows:

For a *Service Request Message* and a *Service Response Message*, the base station shall set this field to the number of the multiplex option for the Reverse Fundamental Channel, Reverse Dedicated Control Channel, or both, if both are present.

For a *Service Connect Message*, *General Handoff Direction Message*, and a *Universal Handoff Direction Message*, the base station shall set this field to the number of the multiplex option for the Reverse Fundamental Channel, Reverse Dedicated Control Channel, or both, if both are present.

If MOB_P_REV is greater than or equal to eight, the base station shall set this field as follows:

For a *Service Request Message* and a *Service Response Message*, the base station shall set this field to the number of the multiplex option for the Reverse Fundamental Channel, Reverse Dedicated Control Channel, or both, according to the value as specified by FCH_DCCH_MUX_OPTION_IND.

For a *Service Connect Message*, *General Handoff Direction Message*, and a *Universal Handoff Direction Message*, the base station shall set this field to the number of the multiplex option for the Reverse Fundamental Channel, Reverse Dedicated Control Channel, or both, according to the value as specified by FCH_DCCH_MUX_OPTION_IND.

FOR_NUM_BITS - Set of number of bits per frame of the Forward Fundamental Channel.

The mobile station shall set this field as follows:

The mobile station shall use the Forward Fundamental Channel transmission set of number of bits per frame specified in 2.7.4.28 for the specified Forward Traffic Channel multiplex option.

For a *Status Response Message*, the mobile station shall set the subfields corresponding to the Forward Traffic Channel transmission set of number of bits per frame of the current service configuration to ‘1’, and shall set the remaining subfields to ‘0’. If FOR_MUX_OPTION is equal to 1 or 2, the mobile station shall set RESERVED to ‘0000’. If the Forward Fundamental Channel configuration is not specified in this record, then the mobile station shall set this field to 0.

For a *Service Request Message* and a *Service Response Message*, the mobile station shall set the subfields corresponding to the Forward Traffic Channel transmission set of number of bits per frame of the proposed service configuration to '1', and shall set the remaining subfields to '0'. If FOR_MUX_OPTION is equal to 1 or 2, the mobile station shall set RESERVED to '0000'. If the Forward Fundamental Channel configuration is not specified in this record, then the mobile station shall set this field to 0.

The base station shall set this field as follows:

The base station shall set this field to the Forward Fundamental Channel transmission set of number of bits per frame specified in 2.7.4.28 for the specified Forward Traffic Channel multiplex option.

For a *Service Request Message* or a *Service Response Message*, the base station shall set the subfields corresponding to the Forward Fundamental Channel transmission set of number of bits per frame of the proposed service configuration to '1', and shall set the remaining subfields to '0'. If FOR_MUX_OPTION is equal to 1 or 2, the base station shall set RESERVED to '0000'. If the Forward Fundamental Channel configuration is not specified in this record, then the base station shall set this field to 0.

For a *Service Connect Message, General Handoff Direction Message*, and a *Universal Handoff Direction Message*, the base station shall set the subfields corresponding to the Forward Fundamental Channel transmission set of number of bits per frame of the actual service configuration to be used to '1', and shall set the remaining subfields to '0'. If FOR_MUX_OPTION is equal to 1 or 2, the base station shall set RESERVED to '0000'. If the Forward Fundamental Channel configuration is not specified in this record, then the base station shall set this field to 0.

REV_NUM_BITS - Set of number of bits per frameof the Reverse Fundamental Channel.

The mobile station shall set this field as follows:

The mobile station shall use the Reverse Fundamental Channel transmission set of number of bits per frame specified in 2.7.4.28 for the specified Reverse Traffic Channel multiplex option.

For a *Status Response Message*, the mobile station shall set the subfields corresponding to the Reverse Traffic Channel transmission set of number of bits per frame of the current service configuration to '1', and shall set the remaining subfields to '0'. If REV_MUX_OPTION is equal to 1 or 2, the mobile station shall set RESERVED to '0000'.

For a *Service Request Message* and a *Service Response Message*, the mobile station shall set the subfields corresponding to the Reverse Traffic Channel transmission set of number of bits per frame of the proposed service configuration to '1', and shall set the remaining subfields to '0'. If REV_MUX_OPTION is equal to 1 or 2, the mobile station shall set RESERVED to '0000'.

The base station shall set this field as follows:

The base station shall set this field to the Reverse Fundamental Channel transmission set of number of bits per frame specified in 2.7.4.28 for the specified Reverse Traffic Channel multiplex option.

For a *Service Request Message* or a *Service Response Message*, the base station shall set the subfields corresponding to the Reverse Fundamental Channel transmission set of number of bits per frame of the proposed service configuration to '1', and shall set the remaining subfields to '0'. If REV_MUX_OPTION is equal to 1 or 2, the base station shall set RESERVED to '0000'.

For a *Service Connect Message*, *General Handoff Direction Message*, and a *Universal Handoff Direction Message*, the base station shall set the subfields corresponding to the Reverse Fundamental Channel transmission set of number of bits per frame of the actual service configuration to be used to '1', and shall set the remaining subfields to '0'. If REV_MUX_OPTION is equal to 1 or 2, the base station shall set RESERVED to '0000'.

NUM_CON_REC - Number of service option connection records.

The mobile station shall set this field as follows:

The mobile station shall set this field to the number of service option connection records included in the message.

The base station shall set this field as follows:

The base station shall set this field to the number of service option connection records included in the message.

For a *Status Response Message*, the mobile station shall include one occurrence of the following variable-length record for each service option connection of the current service configuration. For a *Service Request Message* and a *Service Response Message*, the mobile station shall include one occurrence of the following variable-length record for each service option connection of the proposed service configuration.

For a *Service Request Message* or a *Service Response Message*, the base station shall include one occurrence of the following variable-length record for each service option connection of the proposed service configuration.

For a *Service Connect Message*, a *General Handoff Direction Message*, or a *Universal Handoff Direction Message*, the base station shall include one occurrence of the following variable-length record for each service option connection of the actual service configuration to be used.

RECORD_LEN - Service option connection record length.

The mobile station shall set this field as follows:

The mobile station shall set this field to the number of octets included in this service option connection record including this field.

The base station shall set this field as follows:

The base station shall set this field to the number of octets included in this service option connection record including this field.

CON_REF - Service option connection reference.

The mobile station shall set this field as follows:

For a *Status Response Message*, the mobile station shall set this field to the service option connection reference.

For a *Service Request Message* and a *Service Response Message*, if the service option connection is part of the current service configuration, the mobile station shall set this field to the service option connection reference; otherwise, the mobile station shall set this field to '00000000'.

The base station shall set this field as follows:

For a *Service Request Message* or a *Service Response Message*: if the service option connection is part of the current service configuration, the base station shall set this field to the service option connection reference; otherwise, the base station shall set this field to '00000000'.

For a *Service Connect Message*, *General Handoff Direction Message*, and a *Universal Handoff Direction Message*, the base station shall set this field to the service option connection reference assigned to the service option connection.

SERVICE_OPTION - Service option.

The mobile station shall set this field as follows:

For a *Status Response Message*, the mobile station shall set this field to the service option in use with the service option connection.

For a *Service Request Message* and a *Service Response Message*, the mobile station shall set this field to the service option to be used with the service option connection.

The base station shall set this field as follows:

The base station shall set this field to the service option to be used with the service option connection.

FOR_TRAFFIC - Forward Traffic Channel traffic type.

The mobile station shall set this field as follows:

For a *Status Response Message*, the mobile station shall set this field to the FOR_TRAFFIC code shown in Table 3.7.5.7-1 corresponding to the Forward Traffic Channel traffic type in use with the service option connection.

For a *Service Request Message* and a *Service Response Message*, the mobile station shall set this field to the FOR_TRAFFIC code shown in Table 3.7.5.7-1 corresponding to the Forward Traffic Channel traffic type to be used with the service option connection.

The base station shall set this field as follows:

The base station shall set this field to the FOR_TRAFFIC code shown in Table 3.7.5.7-1 corresponding to the Forward Traffic Channel traffic type to be used with the service option connection.

Table 3.7.5.7-1. FOR_TRAFFIC Codes

FOR_TRAFFIC (binary)	Description
0000	The service option connection does not use Forward Traffic Channel traffic.
0001	The service option connection uses primary traffic on the Forward Traffic Channel.
0010	The service option connection uses secondary traffic on the Forward Traffic Channel.
0011	The service option connection uses signaling traffic on the Forward Traffic Channel.
0100	The service option connection uses the Forward Traffic Channel, but does not classify the traffic as primary, secondary, or signaling traffic.
All other FOR_TRAFFIC codes are reserved.	

REV_TRAFFIC - Reverse Traffic Channel traffic type.

The mobile station shall set this field as follows:

For a *Status Response Message*, the mobile station shall set this field to the REV_TRAFFIC code shown in Table 3.7.5.7-2 corresponding to the Reverse Traffic Channel traffic type in use with the service option connection.

For a *Service Request Message* and a *Service Response Message*, the mobile station shall set this field to the REV_TRAFFIC code shown in Table 3.7.5.7-2 corresponding to the Reverse Traffic Channel traffic type to be used with the service option connection.

The base station shall set this field as follows:

The base station shall set this field to the REV_TRAFFIC code shown in Table 3.7.5.7-2 corresponding to the Reverse Traffic Channel traffic type to be used with the service option connection.

Table 3.7.5.7-2. REV_TRAFFIC Codes

REV_TRAFFIC (binary)	Description
0000	The service option connection does not use Reverse Traffic Channel traffic.
0001	The service option connection uses primary traffic on the Reverse Traffic Channel.
0010	The service option connection uses secondary traffic on the Reverse Traffic Channel.
0011	The service option connection uses signaling traffic on the Reverse Traffic Channel.
0100	The service option connection uses the Reverse Traffic Channel, but does not classify the traffic as primary, secondary, or signaling traffic.
All other REV_TRAFFIC codes are reserved.	

UI_ENCRYPT_MODE - Encryption mode indicator for user information privacy.

The mobile station shall set this field as follows:

For a *Status Response Message*, the mobile station shall set this field to indicate the current user information encryption mode as shown in Table 3.7.5.7-3.

For a *Service Request Message* and a *Service Response Message*, the mobile station shall set this field to indicate the proposed user information encryption mode as shown in Table 3.7.5.7-3.

The base station shall set this field as follows:

For a *Service Request Message* or a *Service Response Message*: the base station shall set this field to the proposed user information encryption mode, as shown in Table 3.7.5.7-3.

For a *Service Connect Message*, *General Handoff Direction Message*, and a *Universal Handoff Direction Message*, the base station shall set this field to the assigned user information encryption mode, as shown in Table 3.7.5.7-3.

Table 3.7.5.7-3. User information Encryption Modes

UI_ENCRYPT_MODE Field (binary)	Encryption Mode Used
000	User information Encryption disabled
001	User information Encryption with ORYX encryption algorithm enabled (not applicable to voice service option). Encryption procedures specified in the service option standard shall be performed.
010	If P_REV_IN_USE is less than nine, this value indicates that User information Encryption uses the Rijndael encryption algorithm. Encryption procedures defined in 2.3.12.4.2.1 shall be performed. If P_REV_IN_USE is greater than or equal to nine, this value indicates that User information Encryption uses the Rijndael encryption algorithm. Encryption procedures defined in the corresponding service option specification shall be performed. (Encryption of voice service option is defined in this document).
011- 111	Reserved

SR_ID – Service reference identifier.

The mobile station shall set this field as follows:

For a *Status Response Message*, the mobile station shall set this field to the service reference identifier in use.

For a *Service Request Message* and a *Service Response Message*, the mobile station shall set this field as follows:

If the service option connection is a part of the current service configuration, the mobile station shall set this field to the service reference identifier in use.

If the service option connection is not a part of the current service configuration, the mobile station shall perform the following:

– If this service option connection request is initiated by the base station, the mobile station shall set this field to the value sent by the base station.

– If this service option connection request is initiated by the mobile station, the mobile station shall perform the following: if the service instance provides a service reference identifier, the mobile station shall set this field to the service reference identifier specified by the service instance; otherwise, the mobile station shall set this field to the smallest unused service reference identifier value between 1 and 6 inclusive.

The base station shall set this field as follows:

For a *Service Request Message*, a *Service Response Message*, a *Service Connect Message*, a *General Handoff Direction Message*, or a *Universal Handoff Direction Message*, the base station shall set this field as follows:

If the service option connection is a part of the current service configuration, the base station shall set this field to the service reference identifier in use.

If the service option connection is not a part of the current service configuration, the base station shall perform the following:

– If this service option connection request is initiated by the mobile station, the base station shall set this field to the value sent by the mobile station.

– If this service option connection request is initiated by the base station, the base station shall perform the following: if the service instance provides a service reference identifier, the base station shall set this field to the service reference identifier specified by the service instance; otherwise, the base station shall set this field to the highest unused service reference identifier value between 1 and 6 inclusive.

RLP_INFO_INCL - RLP information included indicator.

The mobile station shall set this field as follows:

The mobile station shall set this field to ‘1’ if the RLP_BLOB field is included in this record; otherwise, it shall set this field to ‘0’.

The base station shall set this field as follows:

The base station shall set this field to '1' if the RLP_BLOB field is included in this record; otherwise, it shall set this field to '0'.

RLP_BLOB_LEN - RLP information block of bits length.

The mobile station shall set this field as follows:

If the RLP_INFO_INCL field is set to '0', the mobile station shall omit this field; otherwise, it shall include this field and set it as follows:

The mobile station shall set this field to the size of the RLP_BLOB field in integer number of octets.

The base station shall set this field as follows:

If the RLP_INFO_INCL field is set to '0', the base station shall omit this field; otherwise, it shall include this field and set it as follows:

The base station shall set this field to the size of the RLP_BLOB field in integer number of octets.

RLP_BLOB - Radio Link Protocol block of bits.

The mobile station shall set this field as follows:

If the RLP_INFO_INCL field is set to '0', the mobile station shall omit this field; otherwise, the mobile station shall include this field and set it as follows:

For a *Status Response Message*, the mobile station shall set this field to the Radio Link Protocol block of bits for this service option connection.

For a *Service Request Message* or *Service Response Message*, the mobile station shall set this field to the proposed Radio Link Protocol block of bits for this service option connection, and shall add '0' bits to the end of the field as needed in order to make the length of this field equal to an integer number of octets.

The base station shall set this field as follows:

If the RLP_INFO_INCL field is set to ‘0’, the base station shall omit this field; otherwise, the base station shall include this field and set it as follows:

The base station shall set this field to the Radio Link Protocol block of bits for this service option connection, and shall add ‘0’ bits to the end of the field as needed in order to make the length of this field equal to an integer number of octets.

QOS_PARMS_INCL - Presence indicator for the QoS parameters.

The mobile station shall set this field as follows:

The mobile station shall set this field to ‘1’, if QOS_PARMS field is included in the record; otherwise the base station shall set this field to ‘0’.

The base station shall set this field as follows:

The base station shall set this field to ‘1’, if QOS_PARMS field is included in the record; otherwise, the base station shall set this field to ‘0’.

QOS_PARMS_LEN - Length of the block of QoS parameters.

The mobile station shall set this field as follows:

If QOS_PARMS_INCL is set to ‘1’, the mobile station shall set this field to the combined length in octets, of the QOS_PARMS field and the immediately following QOS_RESERVED field; otherwise, the mobile station shall omit this field.

The base station shall set this field as follows:

If QOS_PARMS_INCL is set to ‘1’, the base station shall set this field to the combined length in octets, of the QOS_PARMS field and the immediately following QOS_RESERVED field; otherwise, the base station shall omit this field.

QOS_PARMS - QoS parameters block.

The mobile station shall set this field as follows:

If QOS_PARMS_INCL is set to ‘1’, the mobile station shall include this field in the record as follows:

For a *Status Response Message*, the mobile station shall set this field to the set of QoS parameters configured for this service option connection.

For a *Service Request Message* or *Service Response Message*, the mobile station shall set this field to the set of QoS parameters requested for the respective connection.

The base station shall set this field as follows:

If QOS_PARMS_INCL is set to '1', the base station shall include this field in the record and set it to the set of QoS parameters requested or required for the respective connection.

QOS_RESERVED - Padding bits.

The mobile station shall set this field as follows:

If QOS_PARMS_INCL is set to '1', the mobile station shall include the minimum number of '0' bits necessary to ensure that the combined length of the QOS_PARMS field and of this field is an integer number of octets; otherwise, the mobile station shall omit this field.

The base station shall set this field as follows:

If QOS_PARMS_INCL is set to '1', the base station shall include the minimum number of '0' bits necessary to ensure that the combined length of the QOS_PARMS field and of this field is an integer number of octets; otherwise, the base station shall omit this field.

RESERVED - Reserved bits.

The mobile station shall set this field as follows:

The mobile station shall add reserved bits as needed in order to make the length of the entire record equal to an integer number of octets. The mobile station shall set these bits to '0'.

The base station shall set this field as follows:

The base station shall add reserved bits as needed in order to make the length of this record equal to an integer number of octets. The base station shall set these bits to '0'.

FCH_CC_INCL - Channel configuration for the Fundamental Channel included indicator.

The mobile station shall set this field as follows:

The mobile station shall set this field to '1', if Fundamental Channel Configuration information is included in the record; otherwise, the mobile station shall set this field to '0' to indicate the current values of Channel configuration for the Fundamental Channel are to be used.

The base station shall set this field as follows:

The base station shall set this field to '1', if the channel configuration information for the Fundamental Channel is included in this Service Configuration Record; otherwise, the base station shall set this field to '0' to indicate the current values of Channel configuration for the Fundamental Channel are to be used.

FCH_FRAME_SIZE - Fundamental Channel frame size supported indicator.

The mobile station shall set this field as follows:

If FCH_CC_INCL field is set to '1', the mobile station shall include this field and set it as described below; otherwise, the mobile station shall omit this field.

For a *Status Response Message*, the mobile station shall set this field to '1', if the 5ms frame size is used in the Forward Fundamental Channel (if specified in this record) and Reverse Fundamental Channel, in addition to the 20ms frame size, for the current service configuration; otherwise, the mobile station shall set this field to '0'.

For a *Service Request Message* or a *Service Response Message*, the mobile station shall set this field to '1' if the 5 ms frame size is used in the Forward Fundamental Channel (if specified in this record) and Reverse Fundamental Channel, in addition to the 20 ms frame size, for the proposed service configuration; otherwise the mobile station shall set this field to '0'

The base station shall set this field as follows:

If the FCH_CC_INCL field is set to '0', the base station shall omit this field; otherwise, the base station shall include this field and set it as follows:

The base station shall set this field to '1' if the service configuration includes the use of 5 ms frame size in addition to 20ms frame size for the Forward Fundamental Channel (if specified in this record) and Reverse Fundamental Channel; otherwise, the base station shall set this field to '0'.

FOR_FCH_RC - Forward Fundamental Channel Radio Configuration.

The mobile station shall set this field as follows:

If FCH_CC_INCL field is set to ‘1’, the mobile station shall include this field and set it as described below; otherwise, the mobile station shall omit this field.

For a *Status Response Message*, the mobile station shall set this field to the Forward Fundamental Channel Radio Configuration (see [2]) for the current service configuration. If the Forward Fundamental Channel configuration is not specified in this record, then the mobile station shall set this field to 0.

For a *Service Request Message* or *Service Response Message*, the mobile station shall set this field to the Forward Fundamental Channel Radio Configuration for the proposed service configuration. If the Forward Fundamental Channel configuration is not specified in this record, then the mobile station shall set this field to 0.

The base station shall set this field as follows:

If the FCH_CC_INCL field is set to ‘0’, the base station shall omit this field; otherwise, the base station shall include this field and set it as follows:

For a *Service Request Message* or a *Service Response Message*, the base station shall set this field to the Forward Fundamental Channel Radio Configuration (see [2]) in the proposed service configuration. If the Forward Fundamental Channel configuration is not specified in this record, then the base station shall set this field to 0.

For a *Service Connect Message*, a *General Handoff Direction Message*, or a *Universal Handoff Direction Message*, the base station shall set this field to the actual Forward Fundamental Channel Radio Configuration to be used. If the Forward Fundamental Channel configuration is not specified in this record, then the base station shall set this field to 0.

REV_FCH_RC - Reverse Fundamental Channel Radio Configuration.

The mobile station shall set this field as follows:

If FCH_CC_INCL field is set to ‘1’, the mobile station shall include this field and set it as described below; otherwise, the mobile station shall omit this field.

For a *Status Response Message*, the mobile station shall set field to the Reverse Fundamental Channel Radio Configuration (see [2]) for the current service configuration.

For a *Service Request Message* or a *Service Response Message*, the mobile station shall set this field to the Reverse Fundamental Channel Radio Configuration for the proposed service configuration.

The base station shall set this field as follows:

If the FCH_CC_INCL field is set to ‘0’, the base station shall omit this field; otherwise, the base station shall include this field and set it as follows:

For a *Service Request Message* or a *Service Response Message*, the base station shall set this field to the Reverse Fundamental Channel Radio Configuration (see [2]) in the proposed service configuration.

For a *Service Connect Message*, *a General Handoff Direction Message*, or a *Universal Handoff Direction Message*, the base station shall set this field to the actual Reverse Fundamental Channel Radio Configuration to be used.

DCCH_CC_INCL - Channel configuration for the Dedicated Control Channel included indicator.

The mobile station shall set this field as follows:

The mobile station shall set this field to ‘1’, if DCCH channel configuration information is included in this record; otherwise, the mobile station shall set this field to ‘0’ to indicate the current values of Channel configuration for the Dedicated Control Channel are to be used.

The base station shall set this field as follows:

The base station shall set this field to ‘1’, if channel configuration information for the Dedicated Control Channel is included in this Service Configuration Record; otherwise, the base station shall set this field to ‘0’ to indicate the current values of Channel configuration for the Dedicated Control Channel are to be used.

DCCH_FRAME_SIZE - Dedicated Control Channel frame size.

The mobile station shall set this field as follows:

If DCCH_CC_INCL field is set to ‘1’, the mobile station shall include this field and set it as described below; otherwise, the mobile station shall omit this field.

For a *Status Response Message*, the mobile station shall set this field to the frame size, as defined in Table 3.7.5.7-4, for the current service configuration.

For a *Service Request Message* or a *Service Response Message*, the mobile station shall set this field to the frame size, as defined in Table 3.7.5.7-4, for the proposed service configuration.

The base station shall set this field as follows:

If the DCCH_CC_INCL field is set to '0', the base station shall omit this field; otherwise, the base station shall include this field and set it according to the Table 3.7.5.7-4 as follows:

For a *Service Connect Message*, a *General Handoff Direction Message*, or a *Universal Handoff Direction Message*, the base station shall set this field to the Dedicated Control Channel frame size(s) for the actual service configuration.

For a *Service Request Message* or *a Service Response Message*, the base station shall set this field to the Dedicated Control Channel frame size(s) for the proposed service configuration.

Table 3.7.5.7-4. DCCH Frame Size

DCCH_FRAME_SIZE (binary)	Description
00	Reserved
01	20 ms frame size only
10	5 ms frame size only
11	Both 5 ms and 20 ms frame sizes

FOR_DCCH_RC - Forward Dedicated Control Channel Radio Configuration.

The mobile station shall set this field as follows:

If DCCH_CC_INCL field is set to '1', the mobile station shall include this field and set it as described below; otherwise, the mobile station shall omit this field.

For a *Status Response Message*, the mobile station shall set this field to the Forward Dedicated Control Channel Radio Configuration (see [2]) for the current service configuration. If the Forward Dedicated Control Channel configuration is not specified in this record, then the mobile station shall set this field to 0.

For a *Service Request Message* or a *Service Response Message*, the mobile station shall set this field to the Forward Dedicated Control Channel Radio Configuration for the proposed service configuration. If the Forward Dedicated Control Channel configuration is not specified in this record, then the mobile station shall set this field to 0.

The base station shall set this field as follows:

If the DCCH_CC_INCL field is set to ‘0’, the base station shall omit this field; otherwise, the base station shall include this field and set it as follows:

For a *Service Connect Message*, a *General Handoff Direction Message*, or a *Universal Handoff Direction Message*, the base station shall set this field to the actual Forward Dedicated Control Channel Radio Configuration to be used (see [2]). If the Forward Dedicated Control Channel configuration is not specified in this record, then the mobile station shall set this field to 0.

For a *Service Request Message* or *a Service Response Message*, the base station shall set this field to the Forward Dedicated Control Channel Radio Configuration in the proposed service configuration. If the Forward Dedicated Control Channel configuration is not specified in this record, then the base station shall set this field to 0.

REV_DCCH_RC - Reverse Dedicated Control Channel Radio Configuration.

The mobile station shall set this field as follows:

If DCCH_CC_INCL field is set to ‘1’, the mobile station shall include this field and set it as described below; otherwise, the mobile station shall omit this field.

For a *Status Response Message*, the mobile station shall set this field to the Reverse Dedicated Control Channel Radio Configuration (see [2]) for the current service configuration.

For a *Service Request Message* or a *Service Response Message*, the mobile station shall set this field to the Reverse Dedicated Control Channel Radio Configuration for the proposed service configuration.

The base station shall set this field as follows:

If the DCCH_CC_INCL field is set to ‘0’, the base station shall omit this field; otherwise, the base station shall include this field and set it as follows:

For a *Service Connect Message*, a *General Handoff Direction Message*, or a *Universal Handoff Direction Message*, the base station shall set this field to the actual Reverse Dedicated Control Channel Radio Configuration to be used (see [2]).

For a *Service Request Message* or *a Service Response Message*, the base station shall set this field to the Reverse Dedicated Control Channel Radio Configuration for the proposed service configuration.

FOR_SCH_CC_INCL - Channel configuration for the Forward Supplemental Channel included indicator.

The mobile station shall set this field as follows:

The mobile station shall set this field to '1', if the Forward Supplemental Channel Configuration information is included; otherwise, the mobile station shall set this field to '0' to indicate the current values of Channel configuration for the Forward Supplemental Channel are to be used.

The base station shall set this field as follows:

The base station shall set this field to '1', if the channel configuration information for the Forward Supplemental Channel is included in this Service Configuration Record; otherwise, the base station shall set this field to '0' to indicate the current values of Channel configuration for the Forward Supplemental Channel are to be used.

NUM_FOR_SCH - Number of Forward Supplemental Channels.

The mobile station shall set this field as follows:

If FOR_SCH_CC_INCL field is set to '1', the mobile station shall include this field and set it as describe below; otherwise, the mobile station shall omit this field.

For a *Status Response Message*, the mobile station shall set this field to the number of Forward Supplemental Channels for the current service configuration and include one occurrence of the following three-field SCH record for each Supplemental Channel Configuration.

For a *Service Request Message* or a *Service Response Message*, the mobile station shall set this field to the number of Forward Supplemental Channels for the proposed service configuration and include one occurrence of the following three-field SCH record for each Supplemental Channel Configuration.

The base station shall set this field as follows:

If the FOR_SCH_CC_INCL field is set to '0', the base station shall omit this field; otherwise, the base station shall set this field to the number of Forward Supplemental Channels associated with this service configuration.

If the FOR_SCH_CC_INCL field is set to '1', the base station shall not set this field to '00'.

If the NUM_FOR_SCH field is present, the base station shall include one occurrence of the following three-field record for each Forward Supplemental Channel included in this record:

FOR_SCH_ID - Forward Supplemental Channel Identification

The mobile station shall set this field as follows:

The mobile station shall set this field to the identification of the Supplemental Channel included in this Forward Supplemental Channel Configuration record.

The mobile station shall set this field to the Supplemental Channel identifier, shown in Table 3.7.5.7-5.

Table 3.7.5.7-5. SCH Identifier

FOR_SCH_ID REV_SCH_ID (binary)	Description
00	Supplemental Channel 0
01	Supplemental Channel 1
10-11	Reserved

The base station shall set this field as follows:

The base station shall set this field to the identifier of the Forward Supplemental Channel pertaining to this record.

The base station shall set this field to the Supplemental Channel identifier, shown in Table 3.7.5.7-5.

FOR_SCH_MUX - Forward Supplemental Channel Multiplex Option.

The mobile station shall set this field as follows:

The mobile station shall set this field to the Multiplex Option associated with the maximum data rate for this Forward Supplemental Channel (see [3]).

The base station shall set this field as follows:

The base station shall set this field to the Multiplex Option associated with the maximum data rate for this Forward Supplemental Channel (see [3]).

SCH_CC_Type-specific field - Supplemental Channel Configuration Information.

The mobile station shall set this field as follows:

The mobile station shall set this field to the subfields of the Channel Configuration record defined in 3.7.5.7.1, for this Forward Supplemental Channel included in the service configuration.

The base station shall set this field as follows:

The base station shall set this field as defined in 3.7.5.7.1 for this Forward Supplemental Channel.

REV_SCH_CC_INCL - Channel configuration for the Reverse Supplemental Channel included indicator.

The mobile station shall set this field as follows:

The mobile station shall set this field to ‘1’, if the Reverse Supplemental Channel Configuration information is included; otherwise, the mobile station shall set this field to ‘0’ to indicate the current values of Channel configuration for the Reverse Supplemental Channel are to be used.

The base station shall set this field as follows:

The base station shall set this field to ‘1’ if the channel configuration information for the Reverse Supplemental Channel is included in this service configuration record; otherwise, the base station shall set this field to ‘0’ to indicate the current values of Channel configuration for the Reverse Supplemental Channel are to be used.

NUM_REV_SCH - Number of Reverse Supplemental Channels.

The mobile station shall set this field as follows:

If REV_SCH_CC_INCL field is set to ‘1’, the mobile station shall include this field and set it as described below; otherwise, the mobile station shall omit this field.

For a *Status Response Message*, the mobile station shall set this field to the number of Reverse Supplemental Channels for the current service configuration and include one occurrence of the following three-field record for each reverse Supplemental Channel Configuration.

For a *Service Request Message* or a *Service Response Message*, the mobile station shall set this field to the number of Reverse Supplemental Channels for the proposed service configuration and include one occurrence of the following three-field record for each reverse Supplemental Channel Configuration.

The base station shall set this field as follows:

If the REV_SCH_CC_INCL field is set to ‘0’, the base station shall omit this field; otherwise, the base station shall set this field to the number of Reverse Supplemental Channels associated with this service configuration.

If the REV_SCH_CC_INCL field is set to ‘1’, the base station shall not set this field to ‘00’.

If the NUM_REV_SCH field is present, the base station shall include one occurrence of the following three-field record for each Reverse Supplemental Channel included in this record:

REV_SCH_ID - Reverse Supplemental Channel Identification

The mobile station shall set this field as follows:

The mobile station shall set this field to the identifier of the Supplemental Channel included in this Reverse Supplemental Channel Configuration record.

The mobile station shall set this field to the Supplemental Channel identifier, shown in Table 3.7.5.7-5.

The base station shall set this field as follows:

The base station shall set this field to the identifier of the Reverse Supplemental Channel pertaining to this record.

The base station shall set this field to the Supplemental Channel identifier, shown in Table 3.7.5.7-5.

REV_SCH_MUX - Reverse Supplemental Channel Multiplex Option

The mobile station shall set this field as follows:

The mobile station shall set this field to the Multiplex Option associated with the maximum data rate for this Reverse Supplemental Channel (see [3]).

The base station shall set this field as follows:

The base station shall set this field to the Multiplex Option associated with the maximum data rate for this Reverse Supplemental Channel (see [3]).

SCH_CC_Type-specific field - Supplemental Channel Configuration Information.

The mobile station shall set this field as follows:

The mobile station shall set this field to the subfields of the Channel Configuration record defined in 3.7.5.7.1, for this Reverse Supplemental Channel included in the service configuration.

The base station shall set this field as follows:

The base station shall set this field as defined in 3.7.5.7.1 for this Reverse Supplemental Channel.

FCH_DCCH_MUX_OPTION_IND – FCH and DCCH Multiplex Option Indicator

The mobile station shall set this field according to Table 3.7.5.7-6.

The base station shall set this field according to Table 3.7.5.7-6.

Table 3.7.5.7-6. FCH_DCCH_MUX_OPTION_IND USAGE

FCH_DCCH_MUX_OPTION_IND	Description
00	FOR_MUX_OPTION applies to both the Forward Fundamental Channel and the Forward Dedicated Control Channel (if specified in this record), and REV_MUX_OPTION applies to both the Reverse Fundamental Channel and the Reverse Dedicated Control Channel
01	FOR_MUX_OPTION applies only to the Forward Fundamental Channel (if specified in this record), and REV_MUX_OPTION applies only to the Reverse Fundamental Channel.
10	FOR_MUX_OPTION applies only to the Forward Dedicated Control Channel (if specified in this record), and REV_MUX_OPTION applies only to the Reverse Dedicated Control Channel.
11	FOR_MUX_OPTION applies only to the Forward Fundamental Channel, and REV_MUX_OPTION applies only to the Reverse Fundamental Channel. FOR_DCCH_MUX_OPTION is included for the Forward Dedicated Control Channel (if specified in this record), and REV_DCCH_MUX_OPTION is included for the Reverse Dedicated Control Channel.

FOR_DCCH_MUX_OPTION – Forward DCCH Multiplex Option.

If FCH_DCCH_MUX_OPTION_IND is set to a value other than '11', the mobile station shall omit this field; otherwise, the mobile station shall include this field and set as follows:

For a *Status Response Message*, the mobile station shall set this field to the number of the multiplex option for the Forward Dedicated Control Channel (e.g., 1 corresponds to Multiplex Option 1). If the Forward Dedicated Control Channel configuration is not specified in this record, then the mobile station shall set this field to 0.

For a *Service Request Message* and a *Service Response Message*, the mobile station shall set this field to the number of the multiplex option for the Forward Dedicated Control Channel. If the Forward Dedicated Control Channel configuration is not specified in this record, then the mobile station shall set this field to 0.

If FCH_DCCH_MUX_OPTION_IND is set to a value other than '11', the base station shall omit this field; otherwise, the base station shall include this field and set as follows:

For a *Service Request Message* and a *Service Response Message*, the base station shall set this field to the number of the multiplex option for the Forward Dedicated Control Channel. If the Forward Dedicated Control Channel configuration is not specified in this record, then the mobile station shall set this field to 0.

For a *Service Connect Message*, *General Handoff Direction Message*, and a *Universal Handoff Direction Message*, the base station shall set this field to the number of the multiplex option for the Forward Dedicated Control Channel. If the Forward Dedicated Control Channel configuration is not specified in this record, then the base station shall set this field to 0.

REV_DCCH_MUX_OPTION – Reverse DCCH Multiplex Option.

If FCH_DCCH_MUX_OPTION_IND is set to a value other than '11', the mobile station shall omit this field; otherwise, the mobile station shall include this field and set as follows:

For a *Status Response Message*, the mobile station shall set this field to the number of the multiplex option for the Reverse Dedicated Control Channel (e.g., 1 corresponds to Multiplex Option 1).

For a *Service Request Message* and a *Service Response Message*, the mobile station shall set this field to the number of the multiplex option for the Reverse Dedicated Control Channel.

If DCCH_MUX_OPTION_INCL is set to a value other than '11', the base station shall omit this field; otherwise, the base station shall include this field and set as follows:

For a *Service Request Message* and a *Service Response Message*, the base station shall set this field to the number of the multiplex option for the Reverse Dedicated Control Channel.

For a *Service Connect Message*, *General Handoff Direction Message*, and a *Universal Handoff Direction Message*, the base station shall set this field to the number of the multiplex option for the Reverse Dedicated Control Channel.

FOR_PDCH_CC_INCL - Channel configuration for the Forward Packet Data Channel included indicator.

The mobile station shall set this field as follows:

The mobile station shall set this field to '1', if channel configuration information for the Forward Packet Data Channel is included in this Service Configuration Record; otherwise, the mobile station shall set this field to '0' to indicate the current values of Channel configuration for the Forward Packet Data Channel are to be used.

The base station shall set this field as follows:

The base station shall set this field to ‘1’, if channel configuration information for the Forward Packet Data Channel is included in this Service Configuration Record; otherwise, the base station shall set this field to ‘0’ to indicate the current values of Channel configuration for the Forward Packet Data Channel are to be used.

FOR_PDCH_MUX_OPTION - Forward Packet Data Channel Multiplex Option.

The mobile station shall set this field as follows:

If FOR_PDCH_CC_INCL is set to ‘0’, then the mobile station shall omit this field; otherwise, the mobile station shall set this field to the Multiplex Option associated with the Forward Packet Data Channel (see [3]).

The base station shall set this field as follows:

If FOR_PDCH_CC_INCL is set to ‘0’, then the base station shall omit this field; otherwise, the base station shall set this field to the Multiplex Option associated with the Forward Packet Data Channel (see [3]).

FOR_PDCH_RC - Forward Packet Data Channel Radio Configuration.

The mobile station shall set this field as follows:

If FOR_PDCH_CC_INCL is set to ‘0’, then the mobile station shall omit this field; otherwise, the mobile station shall include this field and set it as follows:

For a *Status Response Message*, the mobile station shall set this field to the Forward Packet Data Channel Radio Configuration (see [2]) for the current service configuration.

For a *Service Request Message* or a *Service Response Message*, the mobile station shall set this field to the Forward Packet Data Channel Radio Configuration (see [2]) for the proposed service configuration.

The base station shall set this field as follows:

If FOR_PDCH_CC_INCL field is set to ‘0’, then the base station shall omit this field; otherwise, the base station shall include this field and set it as follows:

For a *Service Connect Message*, a *General Handoff Direction Message*, or a *Universal Handoff Direction Message*, the base station shall set this field to the actual Forward Packet Data Channel Radio Configuration to be used (see [2]).

For a *Service Request Message* or *a Service Response Message*, the base station shall set this field to the Forward Packet Data Channel Radio Configuration (see [2]) for the proposed service configuration.

REV_PDCH_CC_INCL - Channel configuration for the Reverse Packet Data Channel included indicator.

The mobile station shall set this field as follows:

The mobile station shall set this field to '1', if channel configuration information for the Reverse Packet Data Channel is included in this Service Configuration Record; otherwise, the mobile station shall set this field to '0' to indicate the current values of Channel configuration for the Reverse Packet Data Channel are to be used.

The base station shall set this field as follows:

The base station shall set this field to '1', if channel configuration information for the Reverse Packet Data Channel is included in this Service Configuration Record; otherwise, the base station shall set this field to '0' to indicate the current values of Channel configuration for the Reverse Packet Data Channel are to be used.

REV_PDCH_MUX_OPTION_HIGH_RATE - Reverse Packet Data Channel Multiplex Option for Higher Data Rates.

The mobile station shall set this field as follows:

If REV_PDCH_CC_INCL is set to '0', then the mobile station shall omit this field; otherwise, the mobile station shall include this field and set it as follows:

For a *Status Response Message*, the mobile station shall set this field to the Multiplex Option for Higher Data Rates associated with the Reverse Packet Data Channel (see [3]) for the current service configuration.

For a *Service Request Message* or a *Service Response Message*, the mobile station shall set this field to the Multiplex Option for Higher Data Rates associated with the Reverse Packet Data Channel (see [3]) for the proposed service configuration.

The base station shall set this field as follows:

If REV_PDCH_CC_INCL field is set to '0', then the base station shall omit this field; otherwise, the base station shall include this field and set it as follows:

For a *Service Connect Message*, a *General Handoff Direction Message*, or a *Universal Handoff Direction Message*, the base station shall set this field to the actual Multiplex Option for Higher Data Rates associated with the Reverse Packet Data Channel to be used (see [3]).

For a *Service Request Message* or a *Service Response Message*, the base station shall set this field to the Multiplex Option for Higher Data Rates associated with the Reverse Packet Data Channel (see [3]) for the proposed service configuration.

REV_PDCH_MUX_OPTION_LOW_RATE - Reverse PDCH Mux Option for Lower Data Rates

The mobile station shall set this field as follows:

If REV_PDCH_CC_INCL is set to '0', then the mobile station shall omit this field; otherwise, the mobile station shall include this field and set it as follows:

This field shall be set to 0x1, 0x1301, or 0x1305.

For a *Status Response Message*, the mobile station shall set this field to the Multiplex Option for Lower Data Rates associated with the Reverse Packet Data Channel (see [3]) for the current service configuration.

For a *Service Request Message* or a *Service Response Message*, the mobile station shall set this field to the Multiplex Option for Lower Data Rates associated with the Reverse Packet Data Channel (see [3]) for the proposed service configuration

The base station shall set this field as follows:

If REV_PDCH_CC_INCL field is set to '0', then the base station shall omit this field; otherwise, the base station shall include this field and set it as follows:

For a *Service Connect Message*, a *General Handoff Direction Message*, or a *Universal Handoff Direction Message*, the base station shall set this field to the actual Multiplex Option for Lower Data Rates associated with the Reverse Packet Data Channel to be used (see [3])

For a *Service Request Message* or a *Service Response Message*, the base station shall set this field to the Multiplex Option for Lower Data Rates associated with the Reverse Packet Data Channel (see [3]) for the proposed service configuration.

REV_PDCH_RC - Reverse Packet Data Channel Radio Configuration.

The mobile station shall set this field as follows:

If REV_PDCH_CC_INCL is set to '0', then the mobile station shall omit this field; otherwise, the mobile station shall include this field and set it as follows:

For a *Status Response Message*, the mobile station shall set this field to the Reverse Packet Data Channel Radio Configuration (see [2]) for the current service configuration.

For a *Service Request Message* or a *Service Response Message*, the mobile station shall set this field to the Reverse Packet Data Channel Radio Configuration (see [2]) for the proposed service configuration.

The base station shall set this field as follows:

If REV_PDCH_CC_INCL field is set to '0', then the base station shall omit this field; otherwise, the base station shall include this field and set it as follows:

For a *Service Connect Message*, a *General Handoff Direction Message*, or a *Universal Handoff Direction Message*, the base station shall set this field to the actual Reverse Packet Data Channel Radio Configuration to be used (see [2]).

For a *Service Request Message* or a *Service Response Message*, the base station shall set this field to the Reverse Packet Data Channel Radio Configuration (see [2]) for the proposed service configuration.

RESERVED - Reserved bits.

The mobile station shall set this field as follows:

The mobile station shall add reserved bits as needed in order to make the length of the entire information record equal to an integer number of octets. The mobile station shall set these bits to '0'.

The base station shall set this field as follows:

The base station shall add reserved bits as needed in order to make the length of the entire message equal to an integer number of octets. The base station shall set these bits to '0'.

3.7.5.7.1 Channel Configuration for the Supplemental Channel

The channel configuration information for the Supplemental Channel consists of the following subfields:

Subfields	Length (bits)
SCH_REC_LEN	4
SCH_RC	5
CODING	1
FRAME_40_USED	1
FRAME_80_USED	1
MAX_RATE	4

SCH_REC_LEN - Supplemental Channel channel configuration record length.

The mobile station or base station shall set this field to the number of octets included in this Supplemental Channel channel configuration record including this SCH_REC_LEN field.

SCH_RC - Supplemental Channel Radio Configuration.

The mobile station or base station shall set this field to the Radio Configuration for this Supplemental Channel. Radio Configurations are defined in [2].

CODING - Coding type.

The mobile station or base station shall set this field to ‘1’ if the mobile station or the base station is to use Convolutional Coding when the number of channel bits per frame is less than 360 and Turbo Coding when the number of channel bits per frame is equal to or greater than 360. The mobile station or base station shall set this field to ‘0’ if the mobile station or the base station uses Convolution Coding for all block sizes.

FRAME_40_USED - 40ms frame used indicator

The mobile station or base station shall set this field to ‘1’ if 40ms frame is used; otherwise, the mobile station or base station shall set this field to ‘0’.

If a f-dtch logical channel corresponding to the same sr_id is mapped to both forward Supplemental Channels 0 and 1, then the mobile station or base station shall specify the same frame length for both forward Supplemental Channels 0 and 1.

If a r-dtch logical channel corresponding to the same sr_id is mapped to both reverse Supplemental Channels 0 and 1, then the mobile station or base station shall specify the same frame length for both forward Supplemental Channels 0 and 1.

The base station shall not set both FRAME_40_USED and FRAME_80_USED fields set to '1'.

FRAME_80_USED - 80ms frame used indicator.

The mobile station or base station shall set this field to '1' if 80ms frame is to be used; otherwise, the mobile station or base station shall set this field to '0'.

If a f-dtch logical channel corresponding to the same sr_id is mapped to both forward Supplemental Channels 0 and 1, then the mobile station or base station shall specify the same frame length for both forward Supplemental Channels 0 and 1.

If a r-dtch logical channel corresponding to the same sr_id is mapped to both reverse Supplemental Channels 0 and 1, then the mobile station or base station shall specify the same frame length for both reverse Supplemental Channels 0 and 1.

Then the base station shall not set both FRAME_40_USED and FRAME_80_USED fields set to '1'.

MAX_RATE - Maximum supplemental channel rate

The mobile station or base station shall set this field according to Table 2.7.4.27.3-2 to indicate the maximum forward or reverse supplemental channel data rate supported.

3.7.5.8 Called Party Subaddress

This information record identifies the called party subaddress.

Type-Specific Field	Length (bits)
EXTENSION_BIT	1
SUBADDRESS_TYPE	3
ODD/EVEN_INDICATOR	1
RESERVED	3

Zero or more occurrences of the following field:

{

CHARi	8

}

EXTENSION_BIT - The extension bit.

The base station shall set this field to ‘1’.

SUBADDRESS_TYPE - Type of subaddress.

The base station shall set this field to the SUBADDRESS_TYPE value shown in Table 2.7.4.19-1 corresponding to the type of the subaddress, as defined in [7], Section 4.5.8.

ODD/EVEN_INDICATOR - The indicator of odd/even bits.

The base station shall set this field to the ODD/EVEN_INDICATOR value shown in Table 2.7.4.19-2 corresponding to the indicator of even/odd bits, as defined in [7], Section 4.5.8. It is only used when the type of subaddress is “User specified” and the coding is BCD.

RESERVED - Reserved bits.

The base station shall set this field to ‘000’.

CHARi - Character.

The base station shall include one occurrence of this field for each character in the called party subaddress.

When the SUBADDRESS_TYPE field is equal to ‘000’, the NSAP address shall be encoded using the preferred binary encoding specified in [35].

When the SUBADDRESS_TYPE field is set to ‘010’, user-specified subaddress field is encoded according to the user specification, subject to a maximum length of 20 octets. When interworking with [36] networks, BCD coding should be applied.

3.7.5.9 Calling Party Subaddress

This information record identifies the calling party subaddress.

Type-Specific Field	Length (bits)
EXTENSION_BIT	1
SUBADDRESS_TYPE	3
ODD/EVEN_INDICATOR	1
RESERVED	3

Zero or more occurrences of the following field:

{

CHARi	8

}

EXTENSION_BIT - The extension bit.

The base station shall set this field to ‘1’.

SUBADDRESS_TYPE - Type of subaddress.

The base station shall set this field to the SUBADDRESS_TYPE value shown in Table 2.7.4.19-1 corresponding to the type of the subaddress, as defined in [7], Section 4.5.10.

ODD/EVEN INDICATOR - The indicator of odd/even bits.

The base station shall set this field to the ODD/EVEN_INDICATOR value shown in Table 2.7.4.19-2 corresponding to the indicator of even/odd bits, as defined in [7], Section 4.5.10. It is only used when the type of subaddress is “User specified” and the coding is BCD.

RESERVED - Reserved bits.

The base station shall set this field to ‘000’.

CHARi - Character.

The base station shall include one occurrence of this field for each character in the calling party subaddress.

When the SUBADDRESS_TYPE field is equal to ‘000’, the NSAP address shall be encoded using the preferred binary encoding specified in [35].

When the SUBADDRESS_TYPE field is set to ‘010’, user-specified subaddress field is encoded according to the user specification, subject to a maximum length of 20 octets. When interworking with [36] networks, BCD coding should be applied.

3.7.5.10 Connected Subaddress

This information record identifies the subaddress of the responding party.

Type-Specific Field	Length (bits)
EXTENSION_BIT	1
SUBADDRESS_TYPE	3
ODD/EVEN_INDICATOR	1
RESERVED	3

Zero or more occurrences of the following field:

{

CHARi	8

}

EXTENSION_BIT - The extension bit.

The base station shall set this field to '1'.

SUBADDRESS_TYPE - Type of subaddress.

The base station shall set this field to the SUBADDRESS_TYPE value shown in Table 2.7.4.19-1 corresponding to the type of the subaddress, as defined in [7], Section 4.5.14.

ODD/EVEN INDICATOR - The indicator of odd/even bits.

The base station shall set this field to the ODD/EVEN_INDICATOR value shown in Table 2.7.4.19-2 corresponding to the indicator of even/odd bits, as defined in [7], Section 4.5.14. It is only used when the type of subaddress is "User specified" and the coding is BCD.

RESERVED - Reserved bits.

The base station shall set this field to '000'.

CHARi - Character.

The base station shall include one occurrence of this field for each character in the connected subaddress.

When the SUBADDRESS_TYPE field is equal to '000', the NSAP address shall be encoded using the preferred binary encoding specified in [35].

When the SUBADDRESS_TYPE field is set to '010', user-specified subaddress field is encoded according to the user specification, subject to a maximum length of 20 octets. When interworking with [36] networks, BCD coding should be applied.

3.7.5.11 Redirecting Number

This information record identifies the Redirecting Number.

Type-Specific Field	Length (bits)
EXTENSION_BIT_1	1
NUMBER_TYPE	3
NUMBER_PLAN	4
EXTENSION_BIT_2	0 or 1
PI	0 or 2
RESERVED	0 or 3
SI	0 or 2
EXTENSION_BIT_3	0 or 1
RESERVED	0 or 3
REDIRECTION_REASON	0 or 4

Zero or more occurrences of the following field:

{

CHARi	8

}

EXTENSION_BIT_1 - The extension bit.

If the PI and SI are included in this record, the base station shall set this field to ‘0’; otherwise, the base station shall set this field to ‘1’.

NUMBER_TYPE - Type of number.

The base station shall set this field to the NUMBER_TYPE value shown in Table 2.7.1.3.2.4-2 corresponding to the type of the redirecting number, as defined in [34].

NUMBER_PLAN - Numbering plan.

The base station shall set this field to the NUMBER_PLAN value shown in Table 2.7.1.3.2.4-3 corresponding to the numbering plan used for the redirecting number, as defined in [34].

EXTENSION_BIT_2 - The extension bit.

If the EXTENSION_BIT_1 is set to ‘0’ and REDIRECTION_REASON is included in this record, the base station shall set this field to ‘0’. If the EXTENSION_BIT_1 is set to ‘0’ and REDIRECTION_REASON is not included in this record, the base station shall set this field to ‘1’. If the EXTENSION_BIT_1 is set to ‘1’, the base station shall omit this field.

PI - Presentation indicator.

This field indicates whether or not the redirecting number should be displayed.

if the EXTENSION_BIT_1 is set to ‘0’, the base station shall set this field to the PI value shown in Table 2.7.4.4-1 corresponding to the presentation indicator, as defined in [34]; otherwise, the base station shall omit this field.

RESERVED - Reserved bits.

If the EXTENSION_BIT_1 is set to ‘0’, the base station shall set this field to ‘000’; otherwise, the base station shall omit this field.

SI - Screening indicator.

This field indicates how the redirecting number was screened.

If the EXTENSION_BIT_1 is set to ‘0’, the base station shall set this field to the SI value shown in Table 2.7.4.4-2 corresponding to the screening indicator value, as defined in [34]; otherwise, the base station shall omit this field.

EXTENSION_BIT_3 - The extension bit.

If the EXTENSION_BIT_2 is set to ‘0’, the base station shall set this field to ‘1’; otherwise, the base station shall omit this field.

RESERVED - Reserved bits.

If the EXTENSION_BIT_2 is set to ‘0’, the base station shall set this field to ‘000’; otherwise, the base station shall omit this field.

REDIRECTION_REASON - The reason for redirection.

If the EXTENSION_BIT_2 is set to ‘0’, the base station shall set this field to the REDIRECTION_REASON value shown in Table 3.7.5.5.11-1 corresponding to the redirection reason, as defined in [34]; otherwise, the base station shall omit this field.

Table 3.7.5.11-1. Redirection Reason

Description	REDIRECTION-REASON (binary)
Unknown	0000
Call forwarding busy or called DTE busy	0001
Call forwarding no reply (circuit-mode only)	0010
Called DTE out of order (packet-mode only)	1001
Call forwarding by the called DTE (packet-mode only)	1010
Call forwarding unconditional or Systematic call redirection	1111
Reserved	others

CHARi - Character.

The base stations shall include one occurrence of this field for each character in the Redirecting Number. The base station shall set each occurrence of this field to the ASCII representation corresponding to the character, as specified in [9], with the most significant bit set to ‘0’.

3.7.5.12 Redirecting Subaddress

This information record identifies the subaddress of the responding party.

Type-Specific Field	Length (bits)
EXTENSION_BIT	1
SUBADDRESS_TYPE	3
ODD/EVEN_INDICATOR	1
RESERVED	3

Zero or more occurrences of the following field:

{

CHARi	8

}

EXTENSION_BIT - The extension bit.

The base station shall set this field to '1'.

SUBADDRESS_TYPE - Type of subaddress.

The base station shall set this field to the SUBADDRESS_TYPE value shown in Table 2.7.4.19-1 corresponding to the type of the subaddress, as defined in [34].

ODD/EVEN INDICATOR - The indicator of odd /even bits.

The base station shall set this field to the ODD/EVEN_INDICATOR value shown in Table 2.7.4.19-2 corresponding to the indicator of even/odd bits, as defined in [34]. It is only used when the type of subaddress is "User specified" and the coding is BCD.

RESERVED - Reserved bits.

The base station shall set this field to '000'.

CHARi - Character.

The base station shall include one occurrence of this field for each character in the redirecting subaddress.

When the SUBADDRESS_TYPE field is equal to '000', the NSAP address shall be encoded using the preferred binary encoding specified in [35].

When the SUBADDRESS_TYPE field is set to '010', user-specified subaddress field is encoded according to the user specification, subject to a maximum length of 20 octets. When interworking with [36] networks, BCD coding should be applied.

3.7.5.13 Meter Pulses

This information record identifies the number of meter pulses and frequency of the alert tone.

Type-Specific Field	Length (bits)
PULSE_FREQUENCY	11
PULSE_ON_TIME	8
PULSE_OFF_TIME	8
PULSE_COUNT	4
RESERVED	1

PULSE_FREQUENCY - Pulse frequency.

The base station shall set this field to the frequency of the alert signals in units of 10 Hz or to zero to indicate that line polarity control is to be used. If this field is set to zero, the PULSE_ON_TIME and PULSE_OFF_TIME shall be the period of line polarity reversal and normal line polarity, respectively.

PULSE_ON_TIME - Pulse on time.

The base station shall set this field to the period of the meter pulses in units of 5 ms.

PULSE_OFF_TIME - Pulse off time.

The base station shall set this field to the period of the inter-pulse spacing in units of 5 ms.

PULSE_COUNT - Pulse count.

The base station shall set this field to the number of meter pulses.

RESERVED - Reserved bits.

The base station shall set this field to ‘0’.

3.7.5.14 Parametric Alerting

This information record allows the network to convey information to a user by means of programmable alerting signals.

Type-Specific Field	Length (bits)
CADENCE_COUNT	8
NUM_GROUPS	4

NUM_GROUPS occurrences of the following record:

{ (NUM_GROUPS)

AMPLITUDE	8
FREQ_1	10
FREQ_2	10
ON_TIME	8
OFF_TIME	8
REPEAT	4
DELAY	8

} (NUM_GROUPS)

CADENCE_TYPE	2
RESERVED	2

CADENCE_COUNT - Cadence count.

The base station shall set this field to the number of times the cadence of tone groups will be generated between 0x01 and 0xFE. The base station shall set this field to 0x00 to indicate that the mobile station should end alert tone generation. The base station shall set this field to 0xFF to indicate that the cadence will repeat indefinitely.

NUM_GROUPS - Number of groups.

The base station shall set this field to the number of groups.

AMPLITUDE - Amplitude.

The base station shall set this field to the amplitude level of the tone group in units of -1 dBm.

FREQ_1 - Tone frequency 1.

The base station shall set this field to the first frequency of the tone group in units of 5 Hz.

FREQ_2 - Tone frequency 2.

The base station shall set this field to the second frequency of the tone group in units of 5 Hz. Setting this field to zero creates a single frequency tone.

ON_TIME - On time.

The base station shall set this field to the duration of the tone group in units of 50 ms.

OFF_TIME - Off time.

The base station shall set this field to the duration of the spacing between tones in units of 50 ms.

REPEAT - Repeat.

The base station shall set this field to the number of times the tone group should repeat. The base station shall set this field to 0xFF to indicate that the tone group will repeat indefinitely.

DELAY - Delay.

The base station shall set this field to the length of time before the next tone group begins in units of 50 ms.

CADENCE_TYPE - Parametric Alerting cadence type.

The base station shall set this field to indicate that the alert should be conveyed to the user as specified in Table 3.7.5.14.

Table 3.7.5.14. Cadence Types

CADENCE_TYPE	Meaning
00	Not specified
01	Acoustic earpiece or similar device
10	Device other than acoustic earpiece or similar device (Eg. Ringer)
11	Reserved

RESERVED - Reserved bits.

The base station shall set this field to ‘00’.

3.7.5.15 Line Control

This information record allows the network to convey line control information.

Type-Specific Field	Length (bits)
POLARITY_INCLUDED	1
TOGGLE_MODE	0 or 1
REVERSE_POLARITY	0 or 1
POWER_DENIAL_TIME	8
RESERVED	0 - 7 (as needed)

POLARITY_INCLUDED - Polarity parameter included.

If the mobile station is to change the line polarity, the base station shall set this field to ‘1’; otherwise, the base station shall set this field to ‘0’.

TOGGLE_MODE - If POLARITY_INCLUDED is set to ‘1’, the base station shall include this field and set it to ‘1’ to toggle the line polarity or to ‘0’ to set the polarity to the absolute value indicated in the REVERSE_POLARITY field.

REVERSE_POLARITY - Reverse polarity.

If POLARITY_INCLUDED is set to ‘1’ and TOGGLE_MODE is equal to ‘0’, the base station shall include this field and set it to ‘1’ to reverse the tip and ring polarity or to ‘0’ to use normal polarity. If POLARITY_INCLUDED is set to ‘1’ and TOGGLE_MODE is set to ‘1’, the base station shall include this field and set it to ‘0’; otherwise, the base station shall omit this field.

POWER_DENIAL_TIME - Power denial timeout.

The base station shall include this field and set it to the duration of the power denial in increments of 5 ms.

RESERVED - Reserved bits.

The base station shall add reserved bits as needed in order to make the length of the entire message equal to an integer number of octets. The base station shall set these bits to ’0’.

3.7.5.16 Extended Display

This information record allows the network to supply supplementary service display information that may be displayed by the mobile station.

Type-Specific Field	Length (bits)
EXT_DISPLAY_IND	1
DISPLAY_TYPE	7

One or more occurrences of the following record:

{

DISPLAY_TAG	8
DISPLAY_LEN	8

DISPLAY_LEN occurrences of the following field if the DISPLAY_TAG field is not equal to ‘10000000’ or ‘10000001’:

{ (DISPLAY_LEN)

CHARi	8

} (DISPLAY_LEN)

}

EXT_DISPLAY_IND - The indicator of Extended Display Information record.

The base station shall set this field to ‘1’.

DISPLAY_TYPE - The type of display.

The base station shall set this field to the DISPLAY_TYPE value shown in Table 3.7.5.16-1 corresponding to the type of display, as defined in [8] Annex D.

Table 3.7.5.16-1. Display Type

Description	DISPLAY_TYPE (binary)
Normal	0000000
All other DISPLAY_TYPE values are reserved.	

DISPLAY_TAG - The indicator of the display information.

There are three types of display tags: mandatory control tags (Blank and Skip), display text tags, and optional control tags, see [8] Annex D.

The base station shall set this field to the DISPLAY_TAG value shown in Table 3.7.5.16-2 corresponding to the type of information contained in the following CHARi field, as defined in [8] Annex D.

Table 3.7.5.16-2. Mandatory Control Tags and Display Text Tags

Description	DISPLAY_TAG (binary)
Blank	10000000
Skip	10000001
Continuation	10000010
Called Address	10000011
Cause	10000100
Progress Indicator	10000101
Notification Indicator	10000110
Prompt	10000111
Accumulated Digits	10001000
Status	10001001
Inband	10001010
Calling Address	10001011
Reason	10001100
Calling Party Name	10001101
Called Party Name	10001110
Original Called Name	10001111
Redirecting Name	10010000
Connected Name	10010001
Originating Restrictions	10010010
Date & Time of Day	10010011
Call Appearance ID	10010100
Feature Address	10010101
Redirection Name	10010110
Redirection Number	10010111
Redirecting Number	10011000
Original Called Number	10011001
Connected Number	10011010
Text (e.g., ASCII)	10011110

DISPLAY_LEN - The display length.

The base station shall set this field to the number of octets of display text. See [8] Annex D.

CHARi - Character.

The base station shall include DISPLAY_LEN occurrences of this field, one for each character to be displayed, except for blank and skip. The base station shall set each occurrence of this field to the ASCII representation corresponding to the character entered, as specified in [9], with the most significant bit set to '0'.

3.7.5.17 Extended Record Type - International

The use of this record type is country-specific. The first ten bits of the type-specific fields shall include the Mobile Country Code (MCC) associated with the national standards organization administering the use of the record type. Encoding of the MCC shall be as specified in 2.3.1.3. The remaining six bits of the first two octets of the type-specific fields shall be used to specify the country-specific record type.

3.7.5.18 Reserved

3.7.5.19 Reserved

3.7.5.20 Non-Negotiable Service Configuration

This record is included in a *Service Connect Message* to specify the non-negotiable service configuration parameters to be used by the mobile station. This record can be included in a *General Handoff Direction Message* or a *Universal Handoff Direction Message* to specify the non-negotiable service configuration parameters to be used by the mobile station.

Type Specific Field	Length (bits)
FPC_INCL	1
FPC_PRI_CHAN	0 or 1
FPC_MODE	0 or 3
FPC_OLPC_FCH_INCL	0 or 1
FPC_FCH_FER	0 or 5
FPC_FCH_MIN_SETPT	0 or 8
FPC_FCH_MAX_SETPT	0 or 8
FPC_OLPC_DCCH_INCL	0 or 1
FPC_DCCH_FER	0 or 5
FPC_DCCH_MIN_SETPT	0 or 8
FPC_DCCH_MAX_SETPT	0 or 8

GATING_RATE_INCL	1
PILOT_GATING_RATE	0 or 2

FOR_SCH_INCL	1
NUM_FOR_SCH	0 or 2

If FOR_SCH_INCL = ‘1’, include NUM_FOR_SCH occurrences of the following record:

{ (NUM_FOR_SCH)

FOR_SCH_ID	2
FOR_SCH_FRAME_OFFSET	2

} (NUM_FOR_SCH)

REV_SCH_INCL	1
NUM_REV_SCH	0 or 2

If REV_SCH_INCL = ‘1’, include NUM_REV_SCH occurrences of the following record:

{ (NUM_REV_SCH)

REV_SCH_ID	2
REV_SCH_FRAME_OFFSET	2

} (NUM_REV_SCH)

LPM_IND	2
NUM_LPM_ENTRIES	0 or 4

If LPM_IND = '01', include NUM_LPM_ENTRIES occurrences of the following record:

{ (NUM_LPM_ENTRIES)

SR_ID	3
LOGICAL_RESOURCE	4
PHYSICAL_RESOURCE	4
FORWARD_FLAG	1
REVERSE_FLAG	1
PRIORITY	4

} (NUM_LPM_ENTRIES)

NUM_REC	3

NUM_REC occurrences of the following record:

{ (NUM_REC)

RECORD_LEN	8
SR_ID	3
SDB_SO_OMIT	1
RESERVED	0-7 (as needed)

} (NUM_REC)

Type Specific Field	Length (bits)
USE_FLEX_NUM_BITS	1
NUM_BITS_TABLES_INCL	0 or 1
NUM_BITS_TABLES_COUNT	0 or 3

If USE_FLEX_NUM_BITS is equal to '1' and NUM_BITS_TABLES_INCL is equal to '1', then include NUM_BITS_TABLES_COUNT+1 occurrences of the following record:

{ (NUM_BITS_TABLES_COUNT+1)

NUM_BITS_TABLE_ID	4
NUM_RECS	4

If USE_FLEX_NUM_BITS is equal to '1', then NUM_RECS +1 occurrences of the following record:

{ (NUM_RECS+1)

NUM_BITS_IDX	4
NUM_BITS	16
CRC_LEN_IDX	3

} (NUM_RECS+1)

} (NUM_BITS_TABLES_COUNT+1)

(continues on next page)

USE_VAR_RATE	1
VAR_TABLES_INCL	0 or 1
VAR_RATE_TABLES_COUNT	0 or 3

If USE_VAR_RATE is equal to ‘1’ and VAR_TABLES_INCL is equal to ‘1’, then include VAR_RATE_TABLES_COUNT+1 occurrences of the following record

{ (VAR_RATE_TABLES_COUNT+1)

VAR_RATE_TABLE_ID	3
NUM_RECS	4

If USE_VAR_RATE is equal to '1', include NUM_RECS +1 occurrences of the following record

{ (NUM_RECS+1)

NUM_BITS_IDX	4
MASK	NUM_BITS_IDX

} (NUM_RECS+1)

} (VAR_RATE_TABLES_COUNT+1)

If USE_FLEX_NUM_BITS is equal to ‘1’, include the following fields

USE_OLD_FLEX_MAPPING	1
FSCH0_NBIT_TABLE_ID	0 or 4

(continues on next page)

Type Specific Field	Length (bits)
RSCH0_NBIT_TABLE_ID	0 or 4
FSCH1_NBIT_TABLE_ID	0 or 4
RSCH1_NBIT_TABLE_ID	0 or 4
FFCH_NBIT_TABLE_ID	0 or 4
RFCH_NBIT_TABLE_ID	0 or 4
FDCCH_NBIT_TABLE_ID	0 or 4
FDCCH_NBITS_IDX	0 or 4
RDCCH_NBIT_TABLE_ID	0 or 4
RDCCH_NBITS_IDX	0 or 4

If USE_VAR_RATE is equal to '1', include the following fields

USE_OLD_VAR_MAPPING	1
FSCH0_VAR_TABLE_ID	0 or 3
RSCH0_VAR_TABLE_ID	0 or 3
FSCH1_VAR_TABLE_ID	0 or 3
RSCH1_VAR_TABLE_ID	0 or 3
R_INC_RATE_ALLOWED	0 or 1
F_INC_RATE_ALLOWED	0 or 1

LTU_INFO_INCL	1
LTU_TABLES_INCL	0 or 1
NUM_LTU_TABLES	0 or 2

Include NUM_LTU_TABLES + 1 occurrences of the following record

{ (NUM_LTU_TABLES+1)

LTU_TABLE_ID	3

(continues on next page)

Type Specific Field	Length (bits)
NUM_ROWS	4

NUM_ROWS + 1 occurrences of the following records

{ (NUM_ROWS+1)

NBITS_IDX	4
NUM_LTUS	4

} (NUM_ROWS+1)

} (NUM_LTU_TABLES+1)

USE_OLD_LTU_MAPPING	0 or 1
FSCH0_LTU_TAB_ID	0 or 3
RSCH0_LTU_TAB_ID	0 or 3
FSCH1_LTU_TAB_ID	0 or 3
RSCH1_LTU_TAB_ID	0 or 3

PARTITION_TABLES_INFO_INCL	0 or 1
PARTITION_TABLES_INCL	0 or 1
NUM_PARTITION_TABLES	0 or 2

NUM_PARTITION_TABLES + 1 occurrences of the following records:

{ (NUM_PARTITION_TABLES+1)

PARTITION_TABLE_ID	3
NUM_ROWS	5

NUM_ROWS + 1 occurrences of the following records

{ (NUM_ROWS+1)

CATEGORY	5
MUX_HEADER_LEN	3
MUX_HEADER	MUX_HEADER_LEN

(continues on next page)

1

Type Specific Field	Length (bits)
NUM_PARTITIONS	3
NUM_PARTITIONS + 1 occurrences of the following record:	
{ (NUM_PARTITIONS+1)	
SR_ID	3
SRV_NUM_BITS	9
} (NUM_PARTITIONS+1)	
} (NUM_ROWS+1)	
} (NUM_PARTITION_TABLES+1)	
USE_OLD_PART_MAPPING	0 or 1
FFCH_PART_TAB_ID	0 or 3
RFCH_PART_TAB_ID	0 or 3
FDCCH_PART_TAB_ID	0 or 3
RDCCH_PART_TAB_ID	0 or 3
USE_ERAM	0 or 1
SWITCHING_PARMS_INCL	0 or 1
NUM_SOFT_SWITCHING_FRAMES_CHM	0 or 4
NUM_SOFTER_SWITCHING_FRAMES_CHM	0 or 4
RPC_INCL	1
RPC_NUM_REC	0 or 2
If RPC INCL is set to '1', RPC_NUM_REC occurrences of the following record: *{ (RPC_NUM_REC)*	
RPC_ADJ_REC_TYPE	4
RPC_ADJ_REC_LEN	5
EXT_RPC_ADJ_REC_LEN	0 or 10
Type-specific fields	8× RPC_ADJ_REC_LEN, or 8× EXT_RPC_ADJ_REC_LEN
} (RPC_NUM_REC	
BCMC_LPM_INCL	1
BCMC_LPM_IND	0 or 2

NUM_BCMC_PROGRAMS	0 or 6

NUM_BCMC_PROGRAMS+1 occurrences of the following variable length record:

{ (NUM_BCMC_PROGRAMS+1)

BCMC_PROGRAM_ID_LEN	5
BCMC_PROGRAM_ID	BCMC_PROGRAM_ID_LEN + 1
BCMC_FLOW_DISCRIMINATOR_LEN	3
NUM_FLOW_DISCRIMINATOR	BCMC_FLOW_DISCRIMINATOR_LEN

NUM_FLOW_DISCRIMINATOR+1 or 1 occurrences of the following variable length record:

{ (NUM_FLOW_DISCRIMINATOR+1) or 1

BCMC_FLOW_DISCRIMINATOR	BCMC_FLOW_DISCRIMINATOR_LEN
PHYSICAL_RESOURCE	4
FORWARD_FLAG	1
REVERSE_FLAG	1
BSR_ID_INCL	1
BSR_ID	0 or 3
FOR_TRAFFIC	0 or 4
REV_TRAFFIC	0 or 4

} (NUM_FLOW_DISCRIMINATOR+1) or 1

} (NUM_BCMC_PROGRAMS+1)

REV_PDCH_PARMS_INCL	1
REV_PDCH_PARMS_1_INCL	0 or 1
REV_PDCH_MAX_AUTO_TPR	0 or 8
REV_PDCH_NUM_ARQ_ROUNDS_NORMAL	0 or 2
REV_PDCH_OPER_PARMS_INCL	0 or 1
REV_PDCH_MAX_SIZE_ALLOWED_ENCODER_PACKET	0 or 4
REV_PDCH_DEFAULT_PERSISTENCE	0 or 1
REV_PDCH_RESET_PERSISTENCE	0 or 1

REV_PDCH_GRANT_PRECEDENCE	0 or 1
REV_PDCH_MSIB_SUPPORTED	0 or 1
REV_PDCH_ALWAYS_ACK_FINAL_ROUND	0 or 1
REV_PDCH_SOFT_HANDOFF_RESET_IND	0 or 1
REV_PDCH_BOOST_PARMS_INCL	0 or 1
REV_PDCH_NUM_ARQ_ROUNDS_BOOST	0 or 2
REV_PDCH_BOOST_OVERSHOOT	0 or 5
REV_REQCH_ENABLED	0 or 1
REV_REQCH_PARMS_INCL	0 or 1
REV_REQCH_QUICK_REPEAT_ALLOWED	0 or 1
REV_REQCH_POWER_REPORTS_PARMS_INCL	0 or 1
REV_REQCH_POWER_HEADROOM_INCREASE	0 or 5
REV_REQCH_POWER_HEADROOM_DECREASE	0 or 5
REV_REQCH_HEADROOM_DURATION	0 or 8
REV_REQCH_MAX_POWER_UPDATE_DURATION	0 or 8
REV_PDCH_CRC_PARMS_INCL	0 or 1
REV_PDCH_INIT_TARGET_TPR	0 or 8
REV_PDCH_MAX_TARGET_TPR	0 or 8
REV_PDCH_QUICK_START_THRESH	0 or 7
REV_PDCH_EP_MAP_LEN	0 or 1
REV_PDCH_EP_MAP	0 or (11 × (REV_PDCH_EP_MAP_LEN +1))

If REV_PDCH_CRC_PARMS_INCL is included and equals ‘1’

{ (weight(REV_PDCH_EP_MAP))

REV_PDCH_STEP_UP	8

REV_PDCH_STEP_DOWN	8
} (weight(REV_PDCH_EP_MAP))	
REV_PDCH_SR_ID_MAP	0 or 7

{ (weight(REV_PDCH_SR_ID_MAP))

REV_PDCH_BOOST_ALLOWED	0 or 1
REV_PDCH_AUTO_ALLOWED	0 or 1

} (weight(REV_PDCH_SR_ID_MAP))

(continues on next page)

1

If REV_REQCH_PARMS_INCL is included and equals ‘1’

{ (weight(REV_PDCH_SR_ID_MAP)+1)

REV_REQCH_MIN_DURATION	8
REV_REQCH_USE_POWER_REPORTS	0 or 1
REV_REQCH_USE_BUFFER_REPORTS	1
REV_REQCH_USE_WATERMARKS	1
REV_REQCH_USE_DEFAULT_TAB	0 or 3
REV_REQCH_BUF_QUANT_PARM_1	0 or 8
REV_REQCH_BUF_QUANT_PARM_2	0 or 8
REV_REQCH_HIGH_WATERMARK_1	0 or 3
REV_REQCH_HIGH_WATERMARK_2	0 or 3
REV_REQCH_LOW_WATERMARK_1	0 or 3
REV_REQCH_LOW_WATERMARK_2	0 or 3
REV_REQCH_CEILING_1	0 or 3
REV_REQCH_CEILING_2	0 or 3
REV_REQCH_FLOOR_1	0 or 3
REV_REQCH_FLOOR_2	0 or 3

} (weight(REV_PDCH_SR_ID_MAP)+1)

RESERVED	0-7 (as needed)

FPC_INCL - Forward power control information included indicator.

The base station shall set this field to ‘1’ if the forward power control information parameters are included in this record; otherwise, it shall set this field to ‘0’.

FPC_PRI_CHAN - Power Control Subchannel indicator.

If the FPC_INCL field is set to ‘0’, the base station shall omit this field; otherwise, the base station shall include this field and set it as follows:

The base station shall set this field to ‘0’ if the mobile station is to perform the primary inner loop estimation on the received Forward Fundamental Channel; the base station shall set this field to ‘1’ if the mobile station is to perform the primary inner loop estimation on the received Forward Dedicated Control Channel.

If only Fundamental Channel is assigned, the base station shall set this field to '0'. If only the Dedicated Control Channel is assigned, the base station shall set this field to '1'.

If the F-CPCCH is assigned, the base station will multiplex the Power Control Subchannel on the F-CPCCH; otherwise:

If this field is set to '0', the base station will multiplex the Power Control Subchannel on the Forward Fundamental Channel; otherwise, the base station will multiplex the Power Control Subchannel on the Forward Dedicated Control Channel.

FPC_MODE - Forward Power Control operation mode indicator.

If the FPC_INCL field is set to '0', the base station shall omit this field; otherwise, the base station shall include this field and set it as follows:

The base station shall set this field to the value of the forward power control operation mode (see [2]).

FPC_OLPC_FCH_INCL - Fundamental Channel Outer Loop Power Control parameter included indicator.

If the FPC_INCL field is set to '0', the base station shall omit this field; otherwise, the base station shall include this field and set it as follows:

If the forward link Fundamental Channel outer loop power control parameters are included in this record, the base station shall set this field to '1'; otherwise, the base station shall set this field to '0'.

FPC_FCH_FER - Fundamental Channel target Frame Error Rate.

If FPC_OLPC_FCH_INCL is included and set to '1', the base station shall set this field to the target Frame Error Rate on the Forward Fundamental Channel, as specified in Table 3.7.3.3.2.25-2; otherwise, the base station shall omit this field.

FPC_FCH_MIN_SETPT - Minimum Fundamental Channel Outer Loop Eb/Nt setpoint.

If FPC_OLPC_FCH_INCL is included and set to '1', the base station shall set this field to minimum Fundamental Channel Outer Loop Eb/Nt setpoint, in units of 0.125dB; otherwise, the base station shall omit this field.

FPC_FCH_MAX_SETPT - Maximum Fundamental Channel Outer Loop Eb/Nt setpoint.

If FPC_OLPC_FCH_INCL is set to '1', the base station shall set this field to maximum Fundamental Channel Outer Loop Eb/Nt setpoint, in units of 0.125dB; otherwise, the base station shall omit this field.

FPC_OLPC_DCCH_INCL - Dedicated Control Channel Outer Loop Power Control parameter included indicator.

If the FPC_INCL field is set to '0', the base station shall omit this field; otherwise, the base station shall include this field and set it as follows:

If the forward link Dedicated Control Channel outer loop power control parameters are included in this message, the base station shall set this field to '1'; otherwise, the base station shall set this field to '0'.

FPC_DCCH_FER - Dedicated Control Channel target Frame Error Rate.

If FPC_OLPC_DCCH_INCL is included and set to '1', the base station shall set this field to the target Frame Error Rate on the Forward Dedicated Control Channel, as specified in Table 3.7.3.3.2.25-2; otherwise, the base station shall omit this field.

FPC_DCCH_MIN_SETPT - Minimum Dedicated Control Channel Outer Loop Eb/Nt setpoint.

If FPC_OLPC_DCCH_INCL is included and set to '1', the base station shall set this field to minimum Dedicated Control Channel Outer Loop Eb/Nt setpoint, in units of 0.125dB; otherwise, the base station shall omit this field.

FPC_DCCH_MAX_SETPT - Maximum Dedicated Control Channel Outer Loop Eb/Nt setpoint.

If FPC_OLPC_DCCH_INCL is included and set to '1', the base station shall set this field to maximum Dedicated Control Channel Outer Loop Eb/Nt setpoint, in units of 0.125dB; otherwise, the base station shall omit this field.

GATING_RATE_INCL - Reverse Pilot Channel Gating rate included flag.

The base station shall set this field to '1' if the PILOT_GATING_RATE field is included; otherwise, it shall set this field to '0'.

PILOT_GATING_RATE - Reverse Pilot Channel Gating rate.

If the GATING_RATE_INCL field is set to '0', the base station shall omit this field; otherwise, the base station shall set this field as follows: The base station shall set this field to the PILOT_GATING_RATE field shown in Table 3.7.5.20-1 corresponding to the gating rate on the Reverse Pilot Channel.

Table 3.7.5.20-1. Reverse Pilot Gating rate

PILOT_GATING_RATE field (binary)	Meaning
00	Gating rate 1
01	Gating rate ½
10	Gating rate ¼
11	Reserved

FOR_SCH_INCL - Forward Supplemental Channel information included indicator.

The base station shall set this field to '1', if the forward Supplemental Channel information is included; otherwise, the base station shall set this field to '0'.

NUM_FOR_SCH - Number of Forward Supplemental Channels.

If the FOR_SCH_INCL field is set to '0', the base station shall omit this field; otherwise, the base station shall set this field to the number of Forward Supplemental Channels associated with this service configuration.

If the NUM_FOR_SCH field is present and is set to any value other than '00', the base station shall include one occurrence of the following two field record for each Forward Supplemental Channel included in this record:

FOR_SCH_ID - Forward Supplemental Channel Identification.

The base station shall set this field to the identifier of the Forward Supplemental Channel pertaining to this record.

FOR_SCH_FRAME_OFFSET - Forward Supplemental Channel multiple frame offset.

The base station shall set this field to the multiple frame offset of this Forward Supplemental Channel. The frames of this Forward Supplemental Channel are delayed by (FRAME_OFFSET $\times$ 1.25 + FOR_SCH_FRAME_OFFSET $\times$ 20) ms relative to system timing (see [2]).

REV_SCH_INCL - Reverse Supplemental Channel information included indicator.

The base station shall set this field to '1' if the reverse Supplemental Channel information is included; otherwise, the base station shall set this field to '0'.

NUM_REV_SCH - Number of Reverse Supplemental Channels.

If the REV_SCH_INCL field is set to '0', the base station shall omit this field; otherwise, the base station shall set this field to the number of Reverse Supplemental Channels associated with this service configuration.

If the NUM_REV_SCH field is present and is set to any value other than '00', the base station shall include one occurrence of the following two-field record for each Reverse Supplemental Channel included in this record:

REV_SCH_ID - Reverse Supplemental Channel Identification.

The base station shall set this field to the identifier of the Reverse Supplemental Channel pertaining to this record.

REV_SCH_FRAME_OFFSET - Reverse Supplemental Channel multiple frame offset.

The base station shall set this field to the multiple frame offset with this Reverse Supplemental Channel. The frames of this Reverse Supplemental Channel are delayed by (FRAME_OFFSET $\times$ 1.25 + REV_SCH_FRAME_OFFSET $\times$ 20) ms relative to system timing (see [2]).

LPM_IND - Logical to Physical Mapping indicator.

The base station shall set this field to the LPM_IND field value shown in Table 3.7.5.20-2 corresponding to the Logical to Physical Mapping indicator.

The base station shall not set this field to '00' if there is more than one service option connection in the current Service Configuration information record.

Table 3.7.5.20-2. Logical to Physical Mapping indicator

LPM_IND Field (binary)	Logical-to-Physical Mapping indicator
00	Use the default Logical-to-Physical Mapping
01	Use the Logical-to-Physical Mapping included in this record
10	Use the previously stored Logical-to-Physical Mapping
11	Reserved

NUM_LPM_ENTRIES - Number of Logical-to-Physical Mapping entries.

If the LPM_IND field is set to '01', the base station shall include this field and set it as follows; otherwise, the base station shall omit this field:

The base station shall set this field to the number of Logical-to-Physical Mapping entries that are included in this record.

If the NUM_LPM_ENTRIES field is included and is not equal to '0000', the base station shall include NUM_LPM_ENTRIES occurrences of the following six-field record for each Logical-to-Physical Mapping entry:

SR_ID - Service reference identifier.

The base station shall set this field to the identifier of the service reference to which this Logical to Physical Mapping entry applies.

For the signaling service, the base station shall set this field to '000'.

LOGICAL_RESOURCE - Logical resource identifier.

The base station shall set this field to the logical resource identifier shown in Table 3.7.5.20-3 which is to be mapped by this Logical to Physical Mapping entry.

Table 3.7.5.20-3. Logical Resource Identifier.

LOGICAL_RESOURCE (binary)	Logical Resource
0000	dtch
0001	dsch
0010 – 1111	Reserved

PHYSICAL_RESOURCE - Physical resource identifier.

The base station shall set this field to the physical resource identifier shown in Table 3.7.5.20-4 to which the logical channel specified in this Logical to Physical Mapping entry is to be mapped.

If the LOGICAL_RESOURCE field of this record is set to '0001', then the base station shall not set this field to '0010' or '0011'.

Table 3.7.5.20-4. Physical Resource Identifier.

PHYSICAL_RESOURCE (binary)	Physical Resource
0000	FCH
0001	DCCH
0010	SCH0
0011	SCH1
0100	PDCH
0101 – 1111	Reserved

FORWARD_FLAG - Forward mapping indicator.

The base station shall set this field to '1' if the logical to physical channel mapping specified in this record applies to forward logical channels; otherwise, the base station shall set this field to '0'.

REVERSE_FLAG - Reverse mapping indicator.

The base station shall set this field to '1' if the logical to physical channel mapping specified in this record applies to reverse logical channels; otherwise, the base station shall set this field to '0'.

PRIORITY - Multiplexing priority.

The base station shall set this field to '0000'.

NUM_REC - Number of service-specific records.

The base station shall set this field to the number of the following variable-length records included in the message.

The base station shall include one occurrence of the following variable-length record for each service option connection for which this record needs to be specified.

RECORD_LEN - Record length.

The base station shall set this field to the number of octets included in this variable-length record including this field.

SR_ID – Service reference identifier.

The base station shall set this field to the identifier of the service reference associated with this service-specific record.

SDB_SO_OMIT - Short Data Burst service option number omitted indicator.

The base station shall set this field to ‘1’ if the mobile station is required to omit the service option number when sending Short Data Burst (see IS-707-A-2) for this service option connection; otherwise, the base station shall set this field to ‘0’.

RESERVED - Reserved bits.

The base station shall add reserved bits as needed in order to make the length of this record equal to an integer number of octets. The base station shall set these bits to ‘0’.

USE_FLEX_NUM_BITS - Use flexible (non-default) number of bits per frame indicator.

The base station shall set this field to '0' to indicate that the mapping between the number of information bits per frame [NUM_BITS], and a four-bit index field [NUM_BITS_IDX], shall follow the default mapping identified in Table 3.7.3.3.2.37-2 and Table 3.7.3.3.2.37-4.

The base station shall set this field to '1' to indicate a non-default mapping between the number of information bits per frame, [NUM_BITS], and a four-bit index field [NUM_BITS_IDX] is used for at least a forward or reverse traffic channel.

NUM_BITS_TABLES_INCL - Flexible Rate Tables included indicator.

If the USE_FLEX_NUM_BITS field is equal to ‘0’, the base station shall omit this field; otherwise, the base station shall include this field and set this field as follows:

If the Flexible Rate Tables are included in this message, the base station shall set this field to ‘1’; otherwise, the base station shall set this field to ‘0’.

NUM_BITS_TABLES_COUNT - Number of instances of the Flexible Rate Table included in this message.

If the NUM_BITS_TABLES_INCL field is included and is equal to '1', the base station shall include this field and set this field to one less than the number of instances of the Flexible Rate Table included in this message; otherwise, the base station shall omit this field.

If NUM_TABLES_INCL is included and is equal to '1', the base station shall include NUM_BITS_TABLES_COUNT+1 instances of the Flexible Rate Table

NUM_BITS_TABLE_ID - Flexible Rate Table ID.

The base station shall set this field to the ID of the Flexible Rate Table that follows. The base station shall not set this field to '0000'.

NUM_RECS - Number of records in the Flexible Rate Table.

The base station shall set this field to one less than the number of three-field records that follows

The base station shall include NUM_RECS+1 instances of the following three-field record:

NUM_BITS_IDX - Index to the number of bits array.

The base station shall set this field to the index to the array that identifies the number of bits per frame.

NUM_BITS - Number of bits array.

The base station shall set this field to the number of information bits per frame corresponding to the index specified by NUM_BITS_IDX. The base station shall set the number of information bits per frame in accordance with the number of information bits per frame specified by the service option numbers included in the service configuration record.

CRC_LEN_IDX - Array of Number of CRC bits.

The base station shall set this field to specify the number of CRC bits per frame corresponding to the index specified by NUM_BITS_IDX according to Table 3.7.5.20-5. The base station shall not specify more than one value of the CRC length for the same number of bits per frame for a specific channel (i.e., for a given channel, the number of information bits per frame uniquely specifies the length of the CRC field).

Table 3.7.5.20-5. CRC_LEN_IDX

CRC_LEN_IDX (binary)	Number of CRC bits per frame
000	0
001	6
010	8
011	10
100	12
101	16
110-111	Reserved

USE_VAR_RATE - Use variable rate on supplemental channels indicator.

The base station shall set this field to ‘1’ to indicate that at least one of the forward or reverse supplemental channels is to operate in the variable rate mode (i.e., the rate of the supplemental channel can be picked from a pre-determined set of rates autonomously).

The base station shall set this bit to '0' to indicate that variable rate on supplemental channels are not allowed.

VAR_TABLES_INCL - Variable Rate Tables included indicator.

If the USE_VAR_RATE field is equal to ‘0’, the base station shall omit this field; otherwise, the base station shall include this field and set this field as follows:

If the Variable Rate Tables are included in this message, the base station shall set this field to ‘1’; otherwise, the base station shall set this field to ‘0’.

VAR_RATE_TABLES_COUNT - Number of instances of the Variable Rate Mask Table included in this message.

If VAR_TABLES_INCL is included and is equal to ‘1’, the base station shall include this field and set this field to one less than the number of instances of the Variable Rate Mask table included in this message as follows; otherwise, the base station shall omit this field:

If VAR_TABLES_INCL is included and is equal to ‘1’, the base station shall include VAR_RATE_TABLES_COUNT +1 instances of the Variable Rate Mask table

VAR_RATE_TABLE_ID - Variable Rate Mask table ID.

The base station shall set this field to the ID of the Variable Rate Mask table that follows. The base station shall not set this field to ‘000’.

NUM_RECS - Number of records in the Variable Rate Mask table.

The base station shall set this field to one less than the number of two-field records that follows

The base station shall include NUM_RECS+1 instances of the following two fields:

NUM_BITS_IDX - Index to the number of bits array.

The base station shall set this field to the index to the array that identifies the number of bits per supplemental channel frame.

MASK - Number of bits array.

The base station shall set this field to a mask that identifies the other members of the Variable Rate Set. The base station shall set the ith LSB bit (i=1, …, NUM_BITS_IDX) of this field to '1' to indicates that the number of bits per frame specified by the index NUM_BITS_IDX-i is to be included in the Supplemental Variable Rate Set.

USE_OLD_FLEX_MAPPING - Use the previously downloaded mapping between the channels and Flexible Rate Tables.

If the USE_FLEX_NUM_BITS field is equal to '0', the base station shall omit this field; otherwise, the base station shall include this field and set this field as follows:

The base station shall set this field to '1' to indicate that the mobile station is to use the previously downloaded mapping between the channels and Flexible Rate Tables. The base station shall set this field to '0', if the following eight fields are included in this message.

FSCH0_NBIT_TABLE_ID - Forward Supplemental Channel 0 Flexible Rate Table ID.

If the USE_OLD_FLEX_MAPPING field is included and is equal to '0', the base station shall include this field and set this field as follows; otherwise, the base station shall omit this field:

The base station shall set this field to the ID of the Flexible Rate Table corresponding to Forward Supplemental Channel 0. The base station shall set this field to '0000' to indicate that the Flexible Rate feature is not used for Forward Supplemental 0 and the default table specified in 3.7.3.3.2.37-4 shall be used.

RSCH0_NBIT_TABLE_ID - Reverse Supplemental Channel 0 Flexible Rate Table ID.

If the USE_OLD_FLEX_MAPPING field is included and is equal to '0', the base station shall include this field and set this field as follows; otherwise, the base station shall omit this field:

The base station shall set this field to the ID of the Flexible Rate Table corresponding to Reverse Supplemental Channel 0. The base station shall set this field to '0000' to indicate that the Flexible Rate feature is not used for Reverse Supplemental 0 and the default table specified in 3.7.3.3.2.37-2 shall be used.

FSCH1_NBIT_TABLE_ID - Forward Supplemental Channel 1 Flexible Rate Table ID.

If the USE_OLD_FLEX_MAPPING field is included and is equal to '0', the base station shall include this field and set this field as follows; otherwise, the base station shall omit this field:

The base station shall set this field to the ID of the Flexible Rate Table corresponding to Forward Supplemental Channel 1. The base station shall set this field to '0000' to indicate that the Flexible Rate feature is not used for Forward Supplemental 1 and the default table specified in 3.7.3.3.2.37-4 shall be used.

RSCH1_NBIT_TABLE_ID - Reverse Supplemental Channel 1 Flexible Rate Table ID.

If the USE_OLD_FLEX_MAPPING field is included and is equal to '0', the base station shall include this field and set this field as follows; otherwise, the base station shall omit this field:

The base station shall set this field to the ID of the Flexible Rate Table corresponding to Reverse Supplemental Channel 1. The base station shall set this field to '0000' to indicate that the Flexible Rate feature is not used for Reverse Supplemental 1 and the default table specified in 3.7.3.3.2.37-2 shall be used.

FFCH_NBIT_TABLE_ID - Forward Fundamental Channel Flexible Rate Table ID.

If the USE_OLD_FLEX_MAPPING field is included and is equal to '0', the base station shall include this field and set this field as follows; otherwise, the base station shall omit this field:

The base station shall set this field to the ID of the Flexible Rate Table corresponding to the Forward Fundamental Channel. The base station shall set this field to '0000' to indicate that the Flexible Rate feature is not used for the Forward Fundamental Channel.

RFCH_NBIT_TABLE_ID - Reverse Fundamental Channel Flexible Rate Table ID.

If the USE_OLD_FLEX_MAPPING field is included and is equal to '0', the base station shall include this field and set this field as follows; otherwise, the base station shall omit this field:

The base station shall set this field to the ID of the Flexible Rate Table corresponding to the Reverse Fundamental Channel. The base station shall set this field to '0000' to indicate that the Flexible Rate feature is not used for the Reverse Fundamental Channel.

FDCCH_NBIT_TABLE_ID - Forward Dedicated Control Channel Flexible Rate Table ID.

If the USE_OLD_FLEX_MAPPING field is included and is equal to '0', the base station shall include this field and set this field as follows; otherwise, the base station shall omit this field:

The base station shall set this field to the ID of the Flexible Rate Table corresponding to the Forward Dedicated Control Channel. The base station shall set this field to '0000' to indicate that the Flexible Rate feature is not used for the Forward Dedicated Control Channel.

FDCCH_NBITS_IDX - Forward Dedicated Control Channel number of information bits per frame index.

If the FDCCH_NBIT_TABLE_ID field is included and is not equal to '0000', the base station shall include this field and set this field to indicate the number of information bits per Forward Dedicated Control Channel frame; otherwise, the base station shall omit this field.

The number of information bits per frame is specified by the Flexible Rate Table associated with Forward Dedicated Control Channel and FDCCH_NBITS_IDX as the index to the table (i.e., $NUM\_BITS_s[FDCCH\_NBIT\_TABLE\_ID_r][FDCCH\_NBITS\_IDX]$.

RDCCH_NBIT_TABLE_ID - Reverse Dedicated Control Channel Flexible Rate Table ID.

If the USE_OLD_FLEX_MAPPING field is included and is equal to '0', the base station shall include this field and set this field as follows; otherwise, the base station shall omit this field:

The base station shall set this field to the ID of the Flexible Rate Table corresponding to the Reverse Dedicated Control Channel. The base station shall set this field to '0000' to indicate that the Flexible Rate feature is not used for the Reverse Dedicated Control Channel.

RDCCH_NBITS_IDX - Reverse Dedicated Control Channel number of information bits per frame index.

If the RDCCH_NBIT_TABLE_ID field is included and is not equal to '0000', the base station shall include this field and set this field to indicate the number of information bits per Reverse Dedicated Control Channel frame; otherwise, the base station shall omit this field.

The number of information bits per frame is specified by the Flexible Rate Table associated with Reverse Dedicated Control Channel and RDCCH_NBITS_IDX as the index to the table (i.e., $NUM\_BITS_s[RDCCH\_NBIT\_TABLE\_ID_r][RDCCH\_NBITS\_IDX]$.

USE_OLD_VAR_MAPPING - Use the previously downloaded mapping between the channels and Variable Rate Mask Tables.

If the USE_VAR_RATE field is equal to ‘0’, the base station shall omit this field; otherwise, the base station shall include this field and set this field as follows:

The base station shall set this field to ‘1’ to indicate that the mobile station is to use the previously downloaded mapping between the channels and Variable Rate Mask Tables. The base station shall set this field to ‘0’, if the following four fields are included in this message.

FSCH0_VAR_TABLE_ID - Forward Supplemental Channel 0 Variable Rate Mask Table ID.

If the USE_OLD_VAR_MAPPING field is included and is equal to ‘0’, the base station shall include this field and set this field as follows; otherwise, the base station shall omit this field:

The base station shall set this field to the ID of the Variable Rate Mask Table corresponding to Forward Supplemental Channel 0. The base station shall set this field to ‘000’ to indicate that no variable rate operation is performed on the F-SCH0.

RSCH0_VAR_TABLE_ID - Reverse Supplemental Channel 0 Variable Rate Mask Table ID.

If the USE_OLD_VAR_MAPPING field is included and is equal to ‘0’, the base station shall include this field and set this field as follows; otherwise, the base station shall omit this field:

The base station shall set this field to the ID of the Variable Rate Mask Table corresponding to Reverse Supplemental Channel 0. The base station shall set this field to ‘000’ to indicate that the mobile station is not to autonomously change the rate of the R-SCH0.

FSCH1_VAR_TABLE_ID - Forward Supplemental Channel 1 Variable Rate Mask Table ID.

If the USE_OLD_VAR_MAPPING field is included and is equal to ‘0’, the base station shall include this field and set this field as follows; otherwise, the base station shall omit this field:

The base station shall set this field to the ID of the Variable Rate Mask Table corresponding to Forward Supplemental Channel 1. The base station shall set this field to ‘000’ to indicate that no variable rate operation is performed on the F-SCH1.

RSCH1_VAR_TABLE_ID - Reverse Supplemental Channel 1 Variable Rate Mask Table ID.

If the USE_OLD_VAR_MAPPING field is included and is equal to ‘0’, the base station shall include this field and set this field as follows; otherwise, the base station shall omit this field:

The base station shall set this field to the ID of the Variable Rate Mask Table corresponding to Reverse Supplemental Channel 1. The base station shall set this field to ‘000’ to indicate that the mobile station is not to autonomously change the rate of the R-SCH1.

R_INC_RATE_ALLOWED - Reverse increase rate within Variable Rate Set Allowed indicator.

If the USE_VAR_RATE field is included and is equal to ‘1’, the base station shall include this field and set this field as follows; otherwise, the base station shall omit this field:

The base station shall set this field to ‘1’ to indicate that the mobile station is allowed to switch between any of the rates (i.e., number of bits per frame) in the Variable Rate Set for the Reverse Supplemental channels. The base station shall set this field to ‘0’ to indicate that only a downward transition in rate within the rates (i.e., number of bits per frame) in the Variable Rate Set for the Reverse Supplemental channels is allowed.

F_INC_RATE_ALLOWED - Forward increase rate within Variable Rate Set Allowed indicator.

If the USE_VAR_RATE field is included and is equal to ‘1’, the base station shall include this field and set this field as follows; otherwise, the base station shall omit this field:

The base station shall set this field to ‘1’ to indicate that the base station is allowed to switch between any of the rates (i.e., number of bits per frame) in the Variable Rate Set for the Forward Supplemental channels. The base station shall set this field to ‘0’ to indicate that only a downward transition in rate within the rates (i.e., number of bits per frame) in the Variable Rate Set for the Forward Supplemental channels is possible.

LTU_INFO_INCL - LTU Tables included indicator.

The base station shall set this field to ‘1’ if the base station includes LTU related information in this message; otherwise, the base station shall set this field to ‘0’.

The base station shall set this field to ‘0’ if the mobile station indicates that it does not support downloadable LTU Table in the capability information (i.e., the F_SCH_LTU_TAB_SUPPORTED and R_SCH_LTU_TAB_SUPPORTED fields in the capability information are equal to ‘0’).

LTU_TABLES_INCL - LTU Tables included indicator.

If the LTU_INFO_INCL field is equal to ‘0’, the base station shall omit this field; otherwise, the base stations shall include this field and set this field as follows:

If the LTU Tables are included in this message, the base station shall set this field to ‘1’; otherwise, the base station shall set this field to ‘0’.

If LTU_TABLES_INCL is included and is equal to ‘1’, the base station shall include the following fields related to the LTU Table information:

NUM_LTU_TABLES - Number of LTU tables included.

The base station shall set this field to the number of LTU Tables minus one included in this message.

If LTU_TABLES_INCL is included and is equal to ‘1’, then the base station shall include NUM_LTU_TABLES + 1 occurrences of the following fields:

LTU_TABLE_ID - LTU Table ID.

The base station shall set this field to the ID of the LTU Table that follows. The base station shall not set this field to ‘000’.

NUM_ROWS - Number of configurations associated with the LTU Table identified by LTU_TABLE_ID.

The base station shall set this field to one less than the number of rows of the LTU Table identified by LTU_TABLE_ID.

If LTU_TABLES_INCL is included and is equal to ‘1’, then the base station shall include the NUM_ROWS + 1 occurrences of the following fields:

NBITS_IDX - Number of bits per frame index.

The base station shall set this field to the 4-bit index that specified the number of information bits per supplemental channel frame.

NUM_LTUS - Number of LTUs per physical layer supplemental channel frame.

The base station shall specify the number of LTUs per physical layer supplemental channel frame corresponding to the number of information bits per supplemental channel frame specified by NBITS_IDX according to Table 3.7.5.20-6. The base station shall set this field to ‘0000’ to indicate that no LTUs are supported for the number of information bits per frame specified by NBITS_IDX.

Table 3.7.5.20-6. NUM_LTUS

NUM_LTUS (binary)	Number of LTUS per supplemental channel frame
0000	0
0001	2
0010	3
0011	4
0100	5
0101	6
0110	7
0111	8
1000-1111	Reserved

USE_OLD_LTU_MAPPING - Use the previously downloaded mapping between the channels and LTU Tables.

If the LTU_INFO_INCL field is equal to '0', the base station shall omit this field; otherwise, the base station shall include this field and set this field as follows:

The base station shall set this field to '1' to indicate that the mobile station is to use the previously downloaded mapping between the channels and LTU Tables. The base station shall set this field to '0' if the following four fields are included in this message.

FSCH0_LTU_TAB_ID - Forward Supplemental Channel LTU Table ID.

If USE_OLD_LTU_MAPPING is included and is equal to '0', the base station shall include this field and set this field as follows; otherwise, the base station shall omit this field:

The base station shall set this field to the LTU Table ID to be used for the Forward Supplemental Channel 0. The base station shall set this field to '000' to indicate that the default number of LTUs are to be used (see [3]). The base station shall set this field to '000' if MuxPDU Type 5 is not used on this channel (see [3]).

RSCH0_LTU_TAB_ID - Reverse Supplemental Channel LTU Table ID.

If USE_OLD_LTU_MAPPING is included and is equal to '0', the base station shall include this field and set this field as follows; otherwise, the base station shall omit this field:

The base station shall set this field to the LTU Table ID to be used for the Reverse Supplemental Channel 0. The base station shall set this field to '000' to indicate that the default number of LTUs are to be used (see [3]). The base station shall set this field to '000' if MuxPDU Type 5 is not used on this channel (see [3]).

FSCH1_LTU_TAB_ID - Forward Supplemental Channel LTU Table ID.

If USE_OLD_LTU_MAPPING is included and is equal to '0', the base station shall include this field and set this field as follows; otherwise, the base station shall omit this field:

The base station shall set this field to the LTU Table ID to be used for the Forward Supplemental Channel 1. The base station shall set this field to '000' to indicate that the default number of LTUs are to be used {see [3]). The base station shall set this field to '000' if MuxPDU Type 5 is not used on this channel (see [3]).

RSCH1_LTU_TAB_ID - Reverse Supplemental Channel LTU Table ID.

If USE_OLD_LTU_MAPPING is included and is equal to '0', the base station shall include this field and set this field as follows; otherwise, the base station shall omit this field:

The base station shall set this field to the LTU Table ID to be used for the Reverse Supplemental Channel 1. The base station shall set this field to '000' to indicate that the default number of LTUs are to be used (see [3]). The base station shall set this field to '000' if MuxPDU Type 5 is not used on this channel (see [3]).

PARTITION_TABLES_INFO_INCL - Partition Tables information included indicator.

If USE_FLEX_NUM_BITS is equal to '0', the base station shall omit this field; otherwise, the base station shall include this field and set this field as follows:

If Partition Tables information is included in this message, the base station shall set this field to '1'; otherwise, the base station shall set this field to '0'.

PARTITION_TABLES_INCL - Partition Tables included indicator.

If PARTITION_TABLES_INFO_INCL is equal to '0', the base station shall omit this field; otherwise, the base station shall include this field and set this field as follows:

If the Partition Tables are included in this message, the base station shall set this field to '1'; otherwise, the base station shall set this field to '0'.

If PARTITION_TABLES_INCL is included and is equal to '1', then the base station shall include the following fields

NUM_PARTITION_TABLES - Number of partition tables.

The base station shall set this field to one less than the number of Partition Tables corresponding to an FCH or DCCH included in this message.

If PARTITION_TABLES_INCL is included and is equal to '1', then the base station shall include the NUM_PARTITION_TABLES + 1 occurrences of the following fields:

PARTITION_TABLE_ID - Partition Table ID.

The base station shall set this field to the ID of the Partition Table that follows. The base station shall not set this field to '000'.

NUM_ROWS - Number of configurations associated with the Partition Table identified by PARTITION_TABLE_ID.

The base station shall set this field to one less than the number of rows of the Partition Table identified by PARTITION_TABLE_ID.

If PARTITION_TABLES_INCL is included and is equal to '1', then the base station shall include NUM_ROWS + 1 occurrences of the following fields:

CATEGORY - Category number.

The base station shall set this field to the category number of the entry of the Partition Table identified by number of bits per each service as specified below. The base station shall not set this field to '00001' or '00010'. The base station shall place rows of the Partition Table corresponding to the same number of total information bits per frame consecutively. See [3].

MUX_HEADER_LEN - Multiplex Sublayer Header Length.

The base station shall set this field to the length of the multiplex sublayer header corresponding to the entry of the Partition Table identified by number of bits per each service as specified below.

MUX_HEADER - Multiplex Sublayer Header.

The base station shall set this field to the multiplex sublayer header corresponding to the entry of the Partition Table identified by number of bits per each service as specified below.[22]

NUM_PARTITIONS - Number of partitions.

---

[22] The values of the MUX_HEADER corresponding to a specific number of bits per frame, shall be encoded using prefix-free codes. Prefix-free code is defined to be a code constructed so that any partial code word, beginning at the start of a code word but terminating prior to the end of that code word, is not a valid code word.

The base station shall set this field to one less than the number of partitions corresponding to each service (including signaling) included in the entry of the Partition Table identified by CATEGORY.

If PARTITION_TABLES_INCL is included and is equal to '1', then the base station shall include NUM_PARTITIONS + 1 occurrences of the following fields:

SR_ID - Service Reference ID.

The base station shall set this field to the sr_id of the service (sr_id = '000' for signaling) present in this category.

SRV_NUM_BITS - Number of bits allocated to the service.

The base station shall set this field to the number of bits allocated to the service (including signaling) identified by SR_ID.

USE_OLD_PART_MAPPING - Use the previously downloaded mapping between the channels and Partition Tables.

If PARTITION_TABLES_INFO_INCL is equal to '1', the base station shall include this field and set this field as follows; otherwise, the base station shall omit this field:

The base station shall set this field to '1' to indicate that the mobile station is to use the previously downloaded mapping between the channels and Partition Tables. The base station shall set this field to '0', if the following four fields are included in this message.

FFCH_PART_TAB_ID - Forward Fundamental Channel Partition Table ID.

If USE_OLD_PART_MAPPING is included and is equal to '0', the base station shall include this field and set this field as follows; otherwise, the base station shall omit this field:

The base station shall set this field to the Partition Table ID to be used for the Forward Fundamental Channel. The base station shall set this field to '000' to indicate that the default number of bits per service is to be used (see MuxPDU Type 1 and 2 Categories and Formats for the FCH and DCCH in [3]). The base station shall set this field to a value other than '000' if the FFCH_NBIT_TABLE_ID field is included in this message and is not set to '0000'.

RFCH_PART_TAB_ID - Reverse Fundamental Channel Partition Table ID.

If USE_OLD_PART_MAPPING is included and is equal to '0', the base station shall include this field and set this field as follows; otherwise, the base station shall omit this field:

The base station shall set this field to the Partition Table ID to be used for the Reverse Fundamental Channel. The base station shall set this field to '000' to indicate that the default number of bits per service is to be used (see MuxPDU Type 1

and 2 Categories and Formats for the FCH and DCCH in [3]). The base station shall set this field to a value other than '000' if the RFCH_NBIT_TABLE_ID is included in this message and field is not set to '0000'.

FDCCH_PART_TAB_ID - Forward Dedicated Control Channel Partition Table ID.

If USE_OLD_PART_MAPPING is included and is equal to '0', the base station shall include this field and set this field as follows; otherwise, the base station shall omit this field:

The base station shall set this field to the Partition Table ID to be used for the Forward Dedicated Control Channel. The base station shall set this field to '000' to indicate that the default number of bits per service is to be used (see MuxPDU Type 1 and 2 Categories and Formats for the FCH and DCCH in [3]). The base station shall set this field to a value other than '000' if the FDCCH_NBIT_TABLE_ID field is included in this message and is not set to '0000'.

RDCCH_PART_TAB_ID - Reverse Dedicated Control Channel Partition Table ID.

If USE_OLD_PART_MAPPING is included and is equal to '0', the base station shall include this field and set this field as follows; otherwise, the base station shall omit this field:

The base station shall set this field to the Partition Table ID to be used for the Reverse Dedicated Control Channel. The base station shall set this field to '000' to indicate that the default number of bits per service is to be used (see MuxPDU Type 1 and 2 Categories and Formats for the FCH and DCCH in [3]). The base station shall set this field to a value other than '000' if the RDCCH_NBIT_TABLE_ID field is included in this message and is not set to '0000'.

USE_ERAM - Use the Enhanced Rate Adaptation Mode indicator.

The base station shall include this field only if USE_FLEX_NUM_BITS or USE_VAR_RATE is equal to '1'. If included, the base station shall set this field to '1' if the base station is to use lower rate turbo codes for RC4 and RC5 Forward Supplemental Channel and the mobile station is to use lower rate turbo codes for RC4 Reverse Supplemental Channel to match the desired channel interleaver block size instead of pure code symbol repetition; otherwise, the base station shall set this field to '0'.

SWITCHING_PARMS_INCL - R-CQICH switching parameters included indicator.

If the GATING_RATE_INCL field is set to '0', the base station shall omit this field; otherwise, the base station shall include this field and set it as follows:

The base station shall set this field to '1' if the parameters for R-CQICH soft and softer switching are included in this message; otherwise, the base station shall set this field to '0'.

NUM_SOFT_SWITCHING_FRAMES_CHM - Number of frames for R-CQICH soft switching while in Control Hold.

If SWITCHING_PARMS_INCL is not included or included and set to '0', then the base station shall omit this field; otherwise, the base station shall include this field and set it as follows:

The base station shall set this field to the duration of the cell switching period, in units of 20 ms, minus one, during which the mobile station, while in Control Hold, is to transmit the cell switch sequence on the R-CQICH when it switches between two pilots which are in different groups.

NUM_SOFTER_SWITCHING_FRAMES_CHM - Number of frames for R-CQICH softer switching while in Control Hold.

If SWITCHING_PARMS_INCL is not included or included and set to '0', then the base station shall omit this field; otherwise, the base station shall include this field and set it as follows:

The base station shall set this field to the duration of the cell switching period, in units of 20 ms, minus one, during which the mobile station, while in Control Hold, is to transmit the cell switch sequence on the R-CQICH when it switches between two pilots which are in the same group.

RPC_INCL - Reverse Link Power Control parameter included indicator.

If the reverse power control related information is included in this message, the base station shall set this field to '1'; otherwise, the base station shall set this field to '0'.

RPC_NUM_REC - Number of records for Reverse Link Power Control.

If RPC_INCL is set to '0', the base station shall omit this field; otherwise, the base station shall set this field to one less than the number of records included in this message.

If RPC_NUM_REC is included in this message, the base station shall include RPC_NUM_REC occurrences of the following record:

RPC_ADJ_REC_TYPE - Reverse Link Power Control adjustment record type.

The base station shall set this field to the value shown in Table 3.7.3.3.2.25-3 corresponding to the type of adjustment that is to be used.

RPC_ADJ_REC_LEN - Reverse Link Power Control adjustment record length.

If RPC_ADJ_REC_TYPE is not equal to '0100', the base station shall set this field to the number of octets in the type-specific fields of this adjustment record as given in Table 3.7.3.3.2.25-3.

If RPC_ADJ_REC_TYPE is equal to '0100', the base station shall set this field to '0000'.

EXT_RPC_ADJ_REC_LEN- Reverse Link Power Control adjustment record length.

If RPC_ADJ_REC_TYPE is not equal to '0100', the base station shall omit this field; otherwise, the base station shall include this field and set it as follows.

If RPC_ADJ_REC_TYPE is equal to '0100', the base station shall set this field to the number of octets in the type-specific fields of this adjustment record as given in Table 3.7.3.3.2.25-3.

Type-specific fields - Reverse Link Power Control adjustment record type-specific fields.

The base station shall include type-specific fields based on the RPC_ADJ_REC_TYPE of this adjustment record, as specified as below.

If RPC_ADJ_REC_TYPE is equal to '0000', the base station shall set type-specific fields as specified in Table 3.7.5.20-4.

Table 3.7.5.20-4. Type Specific Fields for RECORD_TYPE = '0000'

Fields	Length (Bits)
FCH_INCL	1
FCH_CHAN_ADJ_GAIN	0 or 8
DCCH_INCL	1
DCCH_CHAN_ADJ_GAIN	0 or 8
SCH0_INCL	1
SCH0_CHAN_ADJ_GAIN	0 or 8
SCH1_INCL	1
SCH1_CHAN_ADJ_GAIN	0 or 8
REV_ACKCH_INCL	1
REV_ACKCH_CHAN_ADJ_GAIN	0 or 8
REV_CQICH_INCL	1
REV_CQICH_CHAN_ADJ_GAIN	0 or 8
RESERVED	0-7 (if needed)

FCH_INCL - FCH channel adjustment gain included indicator.

If FCH_CHAN_ADJ_GAIN is included in this message, the base station shall set this field to '1'; otherwise, the base station shall set this field to '0'.

FCH_CHAN_ADJ_GAIN - Channel adjustment gain for Reverse Fundamental Channel.

If FCH_INCL is set to ‘0’, the base station shall omit this field; otherwise, the base station shall set each field to the value of the gain adjustment that the mobile station is to make for the Reverse Fundamental Channel. The base station shall set this field to the correction factor expressed as a two’s complement value in units of 0.125 dB. The base station shall set the value in the range from –48 to 48 inclusive.

DCCH_INCL - DCCH channel adjustment gain included indicator.

If DCCH_CHAN_ADJ_GAIN is included in this message, the base station shall set this field to ‘1’; otherwise, the base station shall set this field to ‘0’.

DCCH_CHAN_ADJ_GAIN - Channel adjustment gain for the Reverse Dedicated Control Channel.

If DCCH_INCL is set to ‘0’, the base station shall omit this field; otherwise, the base station shall set each field to the value of the gain adjustment that the mobile station is to make for the Reverse Dedicated Control Channel. The base station shall set this field to the correction factor expressed as a two’s complement value in units of 0.125 dB. The base station shall set the value in the range from –48 to 48 inclusive.

SCH0_INCL - SCH0 channel adjustment gain included indicator.

If SCH0_CHAN_ADJ_GAIN is included in this message, the base station shall set this field to ‘1’; otherwise, the base station shall set this field to ‘0’.

SCH0_CHAN_ADJ_GAIN - Channel adjustment gain for Reverse Supplemental Channel 0.

If SCH0_INCL is set to ‘0’, the base station shall omit this field; otherwise, the base station shall set each field to the value of the gain adjustment that the mobile station is to make for the Reverse Supplemental Channel 0. The base station shall set this field to the correction factor expressed as a two’s complement value in units of 0.125 dB. The base station shall set the value in the range from –48 to 48 inclusive.

SCH1_INCL - SCH1 channel adjustment gain included indicator.

If SCH1_CHAN_ADJ_GAIN is included in this message, the base station shall set this field to ‘1’; otherwise, the base station shall set this field to ‘0’.

SCH1_CHAN_ADJ_GAIN - Channel adjustment gain for Reverse Supplemental Channel 1.

If SCH1_INCL is set to ‘0’, the base station shall omit this field; otherwise, the base station shall set each field to the value of the gain adjustment that the mobile station is to make for the Supplemental Channel 1. The base station shall set this field to the correction factor expressed as a two’s complement value in units of 0.125 dB. The base station shall set the value in the range from –48 to 48 inclusive.

REV_ACKCH_INCL - Reverse Acknowledgment Channel channel adjustment gain included indicator.

If REV_ACKCH_CHAN_ADJ_GAIN is included in this message, the base station shall set this field to '1'; otherwise, the base station shall set this field to '0'.

REV_ACKCH_CHAN_ADJ_GAIN - Channel adjustment gain for Reverse Acknowledgment Channel.

If REV_ACKCH_INCL is set to '0', the base station shall omit this field; otherwise, the base station shall set each field to the value of the gain adjustment that the mobile station is to make for the Reverse Acknowledgment Channel. The base station shall set this field to the correction factor expressed as a two's complement value in units of 0.125 dB. The base station shall set the value in the range from -24 to 24 inclusive.

REV_CQICH_INCL - Reverse Channel Quality Indicator Channel channel adjustment gain included indicator.

If REV_CQICH_CHAN_ADJ_GAIN is included in this message, the base station shall set this field to '1'; otherwise, the base station shall set this field to '0'.

REV_CQICH_CHAN_ADJ_GAIN - Channel adjustment gain for Reverse Channel Quality Indicator Channel.

If REV_CQICH_INCL is set to '0', the base station shall omit this field; otherwise, the base station shall set each field to the value of the gain adjustment that the mobile station is to make for the Reverse Channel Quality Indicator Channel. The base station shall set this field to the correction factor expressed as a two's complement value in units of 0.125 dB. The base station shall set the value in the range from -16 to 16 inclusive.

RESERVED - Reserved bits.

The base station shall add reserved bits as needed in order to make the length of the entire record equal to an integer number of octets. The base station shall set these bits to '0'.

If RPC_ADJ_REC_TYPE is equal to '0001', the base station shall set type-specific fields as specified in Table 3.7.5.20-5.

Table 3.7.5.20-5. Type Specific Fields for RECORD_TYPE = '0001'

Fields	Length (Bits)
RL_ATT_ADJ_GAIN_TYPE	1
RC3_RC5_20MS_INCL	1
RL_ATT_ADJ_GAIN_1500	0 or 8
RL_ATT_ADJ_GAIN_2700	0 or 8
RL_ATT_ADJ_GAIN_4800	0 or 8
RL_ATT_ADJ_GAIN_9600	0 or 8
RC4_RC6_20MS_INCL	1
RL_ATT_ADJ_GAIN_1800	0 or 8
RL_ATT_ADJ_GAIN_3600	0 or 8
RL_ATT_ADJ_GAIN_7200	0 or 8
RL_ATT_ADJ_GAIN_14400	0 or 8
5MS_INCL	1
RL_ATT_ADJ_GAIN_9600_5MS	0 or 8
RC3_RC5_40MS_INCL	1
RL_ATT_ADJ_GAIN_1350_40MS	0 or 8
RL_ATT_ADJ_GAIN_2400_40MS	0 or 8
RL_ATT_ADJ_GAIN_4800_40MS	0 or 8
RL_ATT_ADJ_GAIN_9600_40MS	0 or 8
RC4_RC6_40MS_INCL	1
RL_ATT_ADJ_GAIN_1800_40MS	0 or 8
RL_ATT_ADJ_GAIN_3600_40MS	0 or 8
RL_ATT_ADJ_GAIN_7200_40MS	0 or 8
RL_ATT_ADJ_GAIN_14400_40MS	0 or 8
RC3_RC5_80MS_INCL	1
RL_ATT_ADJ_GAIN_1200_80MS	0 or 8
RL_ATT_ADJ_GAIN_2400_80MS	0 or 8
RL_ATT_ADJ_GAIN_4800_80MS	0 or 8

(continues on next page)

Fields	Length (Bits)
RL_ATT_ADJ_GAIN_9600_80MS	0 or 8
RC4_RC6_80MS_INCL	1
RL_ATT_ADJ_GAIN_1800_80MS	0 or 8
RL_ATT_ADJ_GAIN_3600_80MS	0 or 8
RL_ATT_ADJ_GAIN_7200_80MS	0 or 8
RL_ATT_ADJ_GAIN_14400_80MS	0 or 8

RESERVED	0-7 (if needed)

RL_ATT_ADJ_GAIN_TYPE - Reverse Link Attribute Adjustment Gain value type indicator.

If the following fields are set to the nominal attribute gain adjustment values that the mobile station is to use for the transmission attributes (relative to Nominal_Attribute_Gain specified in [2]), the base station shall set this field to ‘0’. If the following fields are set to the pilot reference level adjustment values that the mobile station is to use for the transmission attributes (relative to Pilot_Reference_Level specified in [2]), the base station shall set this field to ‘1’.

RC3_RC5_20MS_INCL - Reverse Link Attribute Adjustment Gain for Radio Configuration 3 or 5 of 20 ms frame included indicator.

If Reverse Link Attribute adjustment Gain for Radio Configuration 3 or 5 of 20 ms frame is included in this message, the base station shall set this field to ‘1’; otherwise, the base station shall set this field to ‘0’.

RL_ATT_ADJ_GAIN_1500- Reverse Link Attribute Adjustment Gain for the transmission rate 1500 bits/s.

If RC3_RC5_20MS_INCL is set to ‘0’, the base station shall omit this field.

If RC3_RC5_20MS_INCL is set to ‘1’ and RL_ATT_ADJ_GAIN_TYPE is set to ‘0’, the base station shall set this field to the value of the nominal attribute gain adjustment that the mobile station is to make for the transmission attributes with transmission rate 1500 bits/s, convolutional code and 20ms frame. The base station shall set the value in the range from –48 to 48 inclusive.

If RC3_RC5_20MS_INCL is set to ‘1’ and RL_ATT_ADJ_GAIN_TYPE is set to ‘1’, the base station shall set this field to the value of the pilot reference level adjustment that the mobile station is to make for the transmission attributes with transmission rate 1500 bits/s, convolutional code and 20ms frame.

The base station shall set this field to the correction factor expressed as a two's complement value in units of 0.125 dB.

RL_ATT_ADJ_GAIN_2700- Reverse Link Attribute Adjustment Gain for the transmission rate 2700 bits/s.

If RC3_RC5_20MS_INCL is set to '0', the base station shall omit this field.

If RC3_RC5_20MS_INCL is set to '1' and RL_ATT_ADJ_GAIN_TYPE is set to '0', the base station shall set this field to the value of the nominal attribute gain adjustment that the mobile station is to make for the transmission attributes with transmission rate 2700 bits/s, convolutional code and 20ms frame. The base station shall set the value in the range from –48 to 48 inclusive.

If RC3_RC5_20MS_INCL is set to '1' and RL_ATT_ADJ_GAIN_TYPE is set to '1', the base station shall set this field to the value of the pilot reference level adjustment that the mobile station is to make for the transmission attributes with transmission rate 2700 bits/s, convolutional code and 20ms frame.

The base station shall set this field to the correction factor expressed as a two's complement value in units of 0.125 dB.

RL_ATT_ADJ_GAIN_4800- Reverse Link Attribute Gain Adjustment for the transmission rate 4800 bits/s.

If RC3_RC5_20MS_INCL is set to '0', the base station shall omit this field.

If RC3_RC5_20MS_INCL is set to '1' and RL_ATT_ADJ_GAIN_TYPE is set to '0', the base station shall set this field to the value of the nominal attribute gain adjustment that the mobile station is to make for the transmission attributes with transmission rate 4800 bits/s, convolutional code and 20ms frame. The base station shall set the value in the range from –48 to 48 inclusive.

If RC3_RC5_20MS_INCL is set to '1' and RL_ATT_ADJ_GAIN_TYPE is set to '1', the base station shall set this field to the value of the pilot reference level adjustment that the mobile station is to make for the transmission attributes with transmission rate 4800 bits/s, convolutional code and 20ms frame.

The base station shall set this field to the correction factor expressed as a two's complement value in units of 0.125 dB.

RL_ATT_ADJ_GAIN_9600- Reverse Link Attribute Gain Adjustment for the transmission rate 9600 bits/s.

If RC3_RC5_20MS_INCL is set to '0', the base station shall omit this field.

If RC3_RC5_20MS_INCL is set to '1' and RL_ATT_ADJ_GAIN_TYPE is set to '0', the base station shall set this field to the value of the nominal attribute gain adjustment that the mobile station is to make for the transmission attributes with transmission rate 9600 bits/s, convolutional code and 20ms frame. The base station shall set the value in the range from –48 to 48 inclusive.

If RC3_RC5_20MS_INCL is set to '1' and RL_ATT_ADJ_GAIN_TYPE is set to '1', the base station shall set this field to the value of the pilot reference level adjustment that the mobile station is to make for the transmission attributes with transmission rate 9600 bits/s, convolutional code and 20ms frame.

The base station shall set this field to the correction factor expressed as a two's complement value in units of 0.125 dB.

RC4_RC6_20MS_INCL - Reverse Link Attribute Adjustment Gain for Radio Configuration 4 or 6 of 20ms frame included indicator.

If Reverse Link Attribute Adjustment Gain for Radio Configuration 4 or 6 of 20ms frame is included in this message, the base station shall set this field to '1'; otherwise, the base station shall set this field to '0'.

RL_ATT_ADJ_GAIN_1800- Reverse Link Attribute Gain Adjustment for the transmission rate 1800 bits/s.

If RC4_RC6_20MS_INCL is set to '0', the base station shall omit this field.

If RC4_RC6_20MS_INCL is set to '1' and RL_ATT_ADJ_GAIN_TYPE is set to '0', the base station shall set this field to the value of the nominal attribute gain adjustment that the mobile station is to make for the transmission attributes with transmission rate 1800 bits/s, convolutional code and 20ms frame. The base station shall set the value in the range from –48 to 48 inclusive.

If RC4_RC6_20MS_INCL is set to '1' and RL_ATT_ADJ_GAIN_TYPE is set to '1', the base station shall set this field to the value of the pilot reference level adjustment that the mobile station is to make for the transmission attributes with transmission rate 1800 bits/s, convolutional code and 20ms frame.

The base station shall set this field to the correction factor expressed as a two's complement value in units of 0.125 dB.

RL_ATT_ADJ_GAIN_3600- Reverse Link Attribute Adjustment Gain for the transmission rate 3600 bits/s.

If RC4_RC6_20MS_INCL is set to '0', the base station shall omit this field.

If RC4_RC6_20MS_INCL is set to '1' and RL_ATT_ADJ_GAIN_TYPE is set to '0', the base station shall set this field to the value of the nominal attribute gain adjustment that the mobile station is to make for the transmission attributes with transmission rate 3600 bits/s, convolutional code and 20ms frame. The base station shall set the value in the range from –48 to 48 inclusive.

If RC4_RC6_20MS_INCL is set to '1' and RL_ATT_ADJ_GAIN_TYPE is set to '1', the base station shall set this field to the value of the pilot reference level adjustment that the mobile station is to make for the transmission attributes with transmission rate 3600 bits/s, convolutional code and 20ms frame.

The base station shall set this field to the correction factor expressed as a two's complement value in units of 0.125 dB.

RL_ATT_ADJ_GAIN_7200- Reverse Link Attribute Adjustment Gain for the transmission rate 7200 bits/s.

If RC4_RC6_20MS_INCL is set to '0', the base station shall omit this field.

If RC4_RC6_20MS_INCL is set to '1' and RL_ATT_ADJ_GAIN_TYPE is set to '0', the base station shall set this field to the value of the nominal attribute gain adjustment that the mobile station is to make for the transmission attributes with transmission rate 7200 bits/s, convolutional code and 20ms frame. The base station shall set the value in the range from –48 to 48 inclusive.

If RC4_RC6_20MS_INCL is set to '1' and NORM_ATT_GAIN_TYPE is set to '1', the base station shall set this field to the value of the pilot reference level adjustment that the mobile station is to make for the transmission attributes with transmission rate 7200 bits/s, convolutional code and 20ms frame.

The base station shall set this field to the correction factor expressed as a two's complement value in units of 0.125 dB.

RL_ATT_ADJ_GAIN_14400- Reverse Link Attribute Adjustment Gain for the transmission rate 14400 bits/s.

If RC4_RC6_20MS_INCL is set to '0', the base station shall omit this field.

If RC4_RC6_20MS_INCL is set to '1' and RL_ATT_ADJ_GAIN_TYPE is set to '0', the base station shall set this field to the value of the nominal gain adjustment that the mobile station is to make for the transmission attributes with transmission rate 14400 bits/s, convolutional code and 20ms frame. The base station shall set the value in the range from –48 to 48 inclusive.

If RC4_RC6_20MS_INCL is set to '1' and RL_ATT_ADJ_GAIN_TYPE is set to '1', the base station shall set this field to the value of the pilot reference level adjustment that the mobile station is to make for the transmission attributes with transmission rate 14400 bits/s, convolutional code and 20ms frame.

The base station shall set this field to the correction factor expressed as a two's complement value in units of 0.125 dB.

5MS_INCL - 5ms frame Reverse Link Attribute Adjustment Gain included indicator.

If Reverse Link Attribute Adjustment Gain for 5ms frame is included in this message, the base station shall set this field to '1'; otherwise, the base station shall set this field to '0'.

RL_ATT_ADJ_GAIN_9600_5MS - Reverse Link Attribute Adjustment Gain for the transmission rate 9600 bits/s with 5ms frame.

If 5MS_INCL is set to '0', the base station shall omit this field.

If 5MS_INCL is set to '1' and RL_ATT_ADJ_GAIN_TYPE is set to '0', the base station shall set this field to the value of the nominal attribute gain adjustment that the mobile station is to make for the transmission attributes with transmission rate 9600 bits/s, convolutional code and 5ms frame. The base station shall set the value in the range from –48 to 48 inclusive.

If 5MS_INCL is set to '1' and RL_ATT_ADJ_GAIN_TYPE is set to '1', the base station shall set this field to the value of the pilot reference level adjustment that the mobile station is to make for the transmission attributes with transmission rate 9600 bits/s, convolutional code and 5ms frame.

The base station shall set this field to the correction factor expressed as a two's complement value in units of 0.125 dB.

RC3_RC5_40MS_INCL - Reverse Link Attribute Adjustment Gain for Radio Configuration 3 or 5 of 40 ms frame included indicator.

If Reverse Link Attribute adjustment Gain for Radio Configuration 3 or 5 of 40 ms frame is included in this message, the base station shall set this field to '1'; otherwise, the base station shall set this field to '0'.

RL_ATT_ADJ_GAIN_1350_40MS - Reverse Link Attribute Adjustment Gain for the transmission rate 1350 bits/s.

If RC3_RC5_40MS_INCL is set to '0', the base station shall omit this field.

If RC3_RC5_40MS_INCL is set to '1' and RL_ATT_ADJ_GAIN_TYPE is set to '0', the base station shall set this field to the value of the nominal attribute gain adjustment that the mobile station is to make for the transmission attributes with transmission rate 1350 bits/s, convolutional code and 40ms frame. The base station shall set the value in the range from –48 to 48 inclusive.

If RC3_RC5_40MS_INCL is set to '1' and RL_ATT_ADJ_GAIN_TYPE is set to '1', the base station shall set this field to the value of the pilot reference level adjustment that the mobile station is to make for the transmission attributes with transmission rate 1350 bits/s, convolutional code and 40ms frame.

The base station shall set this field to the correction factor expressed as a two's complement value in units of 0.125 dB.

RL_ATT_ADJ_GAIN_2400_40MS - Reverse Link Attribute Adjustment Gain for the transmission rate 2400 bits/s.

If RC3_RC5_40MS_INCL is set to '0', the base station shall omit this field.

If RC3_RC5_40MS_INCL is set to '1' and RL_ATT_ADJ_GAIN_TYPE is set to '0', the base station shall set this field to the value of the nominal attribute gain adjustment that the mobile station is to make for the transmission attributes with transmission rate 2400 bits/s, convolutional code and 40ms frame. The base station shall set the value in the range from –48 to 48 inclusive.

If RC3_RC5_40MS_INCL is set to '1' and RL_ATT_ADJ_GAIN_TYPE is set to '1', the base station shall set this field to the value of the pilot reference level adjustment that the mobile station is to make for the transmission attributes with transmission rate 2400 bits/s, convolutional code and 40ms frame.

The base station shall set this field to the correction factor expressed as a two's complement value in units of 0.125 dB.

RL_ATT_ADJ_GAIN_4800_40MS - Reverse Link Attribute Gain Adjustment for the transmission rate 4800 bits/s.

If RC3_RC5_40MS_INCL is set to '0', the base station shall omit this field.

If RC3_RC5_40MS_INCL is set to '1' and RL_ATT_ADJ_GAIN_TYPE is set to '0', the base station shall set this field to the value of the nominal attribute gain adjustment that the mobile station is to make for the transmission attributes with transmission rate 4800 bits/s, convolutional code and 40ms frame. The base station shall set the value in the range from –48 to 48 inclusive.

If RC3_RC5_40MS_INCL is set to '1' and RL_ATT_ADJ_GAIN_TYPE is set to '1', the base station shall set this field to the value of the pilot reference level adjustment that the mobile station is to make for the transmission attributes with transmission rate 4800 bits/s, convolutional code and 40ms frame.

The base station shall set this field to the correction factor expressed as a two's complement value in units of 0.125 dB.

RL_ATT_ADJ_GAIN_9600_40MS - Reverse Link Attribute Gain Adjustment for the transmission rate 9600 bits/s.

If RC3_RC5_40MS_INCL is set to ‘0’, the base station shall omit this field.

If RC3_RC5_40MS_INCL is set to ‘1’ and RL_ATT_ADJ_GAIN_TYPE is set to ‘0’, the base station shall set this field to the value of the nominal attribute gain adjustment that the mobile station is to make for the transmission attributes with transmission rate 9600 bits/s, convolutional code and 40ms frame. The base station shall set the value in the range from –48 to 48 inclusive.

If RC3_RC5_40MS_INCL is set to ‘1’ and RL_ATT_ADJ_GAIN_TYPE is set to ‘1’, the base station shall set this field to the value of the pilot reference level adjustment that the mobile station is to make for the transmission attributes with transmission rate 9600 bits/s, convolutional code and 40ms frame.

The base station shall set this field to the correction factor expressed as a two’s complement value in units of 0.125 dB.

RC4_RC6_40MS_INCL - Reverse Link Attribute Adjustment Gain for Radio Configuration 4 or 6 of 40ms frame included indicator.

If Reverse Link Attribute Adjustment Gain for Radio Configuration 4 or 6 of 40ms frame is included in this message, the base station shall set this field to ‘1’; otherwise, the base station shall set this field to ‘0’.

RL_ATT_ADJ_GAIN_1800_40MS - Reverse Link Attribute Gain Adjustment for the transmission rate 1800 bits/s.

If RC4_RC6_40MS_INCL is set to ‘0’, the base station shall omit this field.

If RC4_RC6_40MS_INCL is set to ‘1’ and RL_ATT_ADJ_GAIN_TYPE is set to ‘0’, the base station shall set this field to the value of the nominal attribute gain adjustment that the mobile station is to make for the transmission attributes with transmission rate 1800 bits/s, convolutional code and 40ms frame. The base station shall set the value in the range from –48 to 48 inclusive.

If RC4_RC6_40MS_INCL is set to ‘1’ and RL_ATT_ADJ_GAIN_TYPE is set to ‘1’, the base station shall set this field to the value of the pilot reference level adjustment that the mobile station is to make for the transmission attributes with transmission rate 1800 bits/s, convolutional code and 40ms frame.

The base station shall set this field to the correction factor expressed as a two’s complement value in units of 0.125 dB.

RL_ATT_ADJ_GAIN_3600_40MS - Reverse Link Attribute Adjustment Gain for the transmission rate 3600 bits/s.

If RC4_RC6_40MS_INCL is set to ‘0’, the base station shall omit this field.

If RC4_RC6_40MS_INCL is set to '1' and RL_ATT_ADJ_GAIN_TYPE is set to '0', the base station shall set this field to the value of the nominal attribute gain adjustment that the mobile station is to make for the transmission attributes with transmission rate 3600 bits/s, convolutional code and 40ms frame. The base station shall set the value in the range from –48 to 48 inclusive.

If RC4_RC6_40MS_INCL is set to '1' and RL_ATT_ADJ_GAIN_TYPE is set to '1', the base station shall set this field to the value of the pilot reference level adjustment that the mobile station is to make for the transmission attributes with transmission rate 3600 bits/s, convolutional code and 40ms frame.

The base station shall set this field to the correction factor expressed as a two's complement value in units of 0.125 dB.

RL_ATT_ADJ_GAIN_7200_40MS - Reverse Link Attribute Adjustment Gain for the transmission rate 7200 bits/s.

If RC4_RC6_40MS_INCL is set to '0', the base station shall omit this field.

If RC4_RC6_40MS_INCL is set to '1' and RL_ATT_ADJ_GAIN_TYPE is set to '0', the base station shall set this field to the value of the nominal attribute gain adjustment that the mobile station is to make for the transmission attributes with transmission rate 7200 bits/s, convolutional code and 40ms frame. The base station shall set the value in the range from –48 to 48 inclusive.

If RC4_RC6_40MS_INCL is set to '1' and NORM_ATT_GAIN_TYPE is set to '1', the base station shall set this field to the value of the pilot reference level adjustment that the mobile station is to make for the transmission attributes with transmission rate 7200 bits/s, convolutional code and 40ms frame.

The base station shall set this field to the correction factor expressed as a two's complement value in units of 0.125 dB.

RL_ATT_ADJ_GAIN_14400_40MS - Reverse Link Attribute Adjustment Gain for the transmission rate 14400 bits/s.

If RC4_RC6_40MS_INCL is set to '0', the base station shall omit this field.

If RC4_RC6_40MS_INCL is set to '1' and RL_ATT_ADJ_GAIN_TYPE is set to '0', the base station shall set this field to the value of the nominal gain adjustment that the mobile station is to make for the transmission attributes with transmission rate 14400 bits/s, convolutional code and 40ms frame. The base station shall set the value in the range from –48 to 48 inclusive.

If RC4_RC6_40MS_INCL is set to '1' and RL_ATT_ADJ_GAIN_TYPE is set to '1', the base station shall set this field to the value of the pilot reference level adjustment that the mobile station is to make for the transmission attributes with transmission rate 14400 bits/s, convolutional code and 40ms frame.

The base station shall set this field to the correction factor expressed as a two's complement value in units of 0.125 dB.

RC3_RC5_80MS_INCL - Reverse Link Attribute Adjustment Gain for Radio Configuration 3 or 5 of 80 ms frame included indicator.

If Reverse Link Attribute adjustment Gain for Radio Configuration 3 or 5 of 80 ms frame is included in this message, the base station shall set this field to '1'; otherwise, the base station shall set this field to '0'.

RL_ATT_ADJ_GAIN_1200_80MS - Reverse Link Attribute Adjustment Gain for the transmission rate 1200 bits/s.

If RC3_RC5_80MS_INCL is set to '0', the base station shall omit this field.

If RC3_RC5_80MS_INCL is set to '1' and RL_ATT_ADJ_GAIN_TYPE is set to '0', the base station shall set this field to the value of the nominal attribute gain adjustment that the mobile station is to make for the transmission attributes with transmission rate 1200 bits/s, convolutional code and 80ms frame. The base station shall set the value in the range from –48 to 48 inclusive.

If RC3_RC5_80MS_INCL is set to '1' and RL_ATT_ADJ_GAIN_TYPE is set to '1', the base station shall set this field to the value of the pilot reference level adjustment that the mobile station is to make for the transmission attributes with transmission rate 1200 bits/s, convolutional code and 80ms frame.

The base station shall set this field to the correction factor expressed as a two's complement value in units of 0.125 dB.

RL_ATT_ADJ_GAIN_2400_80MS - Reverse Link Attribute Adjustment Gain for the transmission rate 2400 bits/s.

If RC3_RC5_80MS_INCL is set to '0', the base station shall omit this field.

If RC3_RC5_80MS_INCL is set to '1' and RL_ATT_ADJ_GAIN_TYPE is set to '0', the base station shall set this field to the value of the nominal attribute gain adjustment that the mobile station is to make for the transmission attributes with transmission rate 2400 bits/s, convolutional code and 80ms frame. The base station shall set the value in the range from –48 to 48 inclusive.

If RC3_RC5_80MS_INCL is set to '1' and RL_ATT_ADJ_GAIN_TYPE is set to '1', the base station shall set this field to the value of the pilot reference level adjustment that the mobile station is to make for the transmission attributes with transmission rate 2400 bits/s, convolutional code and 80ms frame.

The base station shall set this field to the correction factor expressed as a two's complement value in units of 0.125 dB.

RL_ATT_ADJ_GAIN_4800_80MS - Reverse Link Attribute Gain Adjustment for the transmission rate 4800 bits/s.

If RC3_RC5_80MS_INCL is set to '0', the base station shall omit this field.

If RC3_RC5_40MS_INCL is set to '1' and RL_ATT_ADJ_GAIN_TYPE is set to '0', the base station shall set this field to the value of the nominal attribute gain adjustment that the mobile station is to make for the transmission attributes with transmission rate 4800 bits/s, convolutional code and 80ms frame. The base station shall set the value in the range from –48 to 48 inclusive.

If RC3_RC5_80MS_INCL is set to '1' and RL_ATT_ADJ_GAIN_TYPE is set to '1', the base station shall set this field to the value of the pilot reference level adjustment that the mobile station is to make for the transmission attributes with transmission rate 4800 bits/s, convolutional code and 80ms frame.

The base station shall set this field to the correction factor expressed as a two's complement value in units of 0.125 dB.

RL_ATT_ADJ_GAIN_9600_80MS - Reverse Link Attribute Gain Adjustment for the transmission rate 9600 bits/s.

If RC3_RC5_80MS_INCL is set to '0', the base station shall omit this field.

If RC3_RC5_80MS_INCL is set to '1' and RL_ATT_ADJ_GAIN_TYPE is set to '0', the base station shall set this field to the value of the nominal attribute gain adjustment that the mobile station is to make for the transmission attributes with transmission rate 9600 bits/s, convolutional code and 80ms frame. The base station shall set the value in the range from –48 to 48 inclusive.

If RC3_RC5_80MS_INCL is set to '1' and RL_ATT_ADJ_GAIN_TYPE is set to '1', the base station shall set this field to the value of the pilot reference level adjustment that the mobile station is to make for the transmission attributes with transmission rate 9600 bits/s, convolutional code and 80ms frame.

The base station shall set this field to the correction factor expressed as a two's complement value in units of 0.125 dB.

RC4_RC6_80MS_INCL - Reverse Link Attribute Adjustment Gain for Radio Configuration 4 or 6 of 80ms frame included indicator.

If Reverse Link Attribute Adjustment Gain for Radio Configuration 4 or 6 of 80ms frame is included in this message, the base station shall set this field to '1'; otherwise, the base station shall set this field to '0'.

RL_ATT_ADJ_GAIN_1800_80MS - Reverse Link Attribute Gain Adjustment for the transmission rate 1800 bits/s.

If RC4_RC6_80MS_INCL is set to '0', the base station shall omit this field.

If RC4_RC6_80MS_INCL is set to '1' and RL_ATT_ADJ_GAIN_TYPE is set to '0', the base station shall set this field to the value of the nominal attribute gain adjustment that the mobile station is to make for the transmission attributes with transmission rate 1800 bits/s, convolutional code and 80ms frame. The base station shall set the value in the range from –48 to 48 inclusive.

If RC4_RC6_80MS_INCL is set to '1' and RL_ATT_ADJ_GAIN_TYPE is set to '1', the base station shall set this field to the value of the pilot reference level adjustment that the mobile station is to make for the transmission attributes with transmission rate 1800 bits/s, convolutional code and 80ms frame.

The base station shall set this field to the correction factor expressed as a two's complement value in units of 0.125 dB.

RL_ATT_ADJ_GAIN_3600_80MS - Reverse Link Attribute Adjustment Gain for the transmission rate 3600 bits/s.

If RC4_RC6_80MS_INCL is set to '0', the base station shall omit this field.

If RC4_RC6_80MS_INCL is set to '1' and RL_ATT_ADJ_GAIN_TYPE is set to '0', the base station shall set this field to the value of the nominal attribute gain adjustment that the mobile station is to make for the transmission attributes with transmission rate 3600 bits/s, convolutional code and 80ms frame. The base station shall set the value in the range from –48 to 48 inclusive.

If RC4_RC6_80MS_INCL is set to '1' and RL_ATT_ADJ_GAIN_TYPE is set to '1', the base station shall set this field to the value of the pilot reference level adjustment that the mobile station is to make for the transmission attributes with transmission rate 3600 bits/s, convolutional code and 80ms frame.

The base station shall set this field to the correction factor expressed as a two's complement value in units of 0.125 dB.

RL_ATT_ADJ_GAIN_7200_80MS - Reverse Link Attribute Adjustment Gain for the transmission rate 7200 bits/s.

If RC4_RC6_80MS_INCL is set to '0', the base station shall omit this field.

If RC4_RC6_80MS_INCL is set to '1' and RL_ATT_ADJ_GAIN_TYPE is set to '0', the base station shall set this field to the value of the nominal attribute gain adjustment that the mobile station is to make for the transmission attributes with transmission rate 7200 bits/s, convolutional code and 80ms frame. The base station shall set the value in the range from –48 to 48 inclusive.

If RC4_RC6_80MS_INCL is set to '1' and NORM_ATT_GAIN_TYPE is set to '1', the base station shall set this field to the value of the pilot reference level adjustment that the mobile station is to make for the transmission attributes with transmission rate 7200 bits/s, convolutional code and 80ms frame.

The base station shall set this field to the correction factor expressed as a two's complement value in units of 0.125 dB.

RL_ATT_ADJ_GAIN_14400_80MS - Reverse Link Attribute Adjustment Gain for the transmission rate 14400 bits/s.

If RC4_RC6_80MS_INCL is set to '0', the base station shall omit this field.

If RC4_RC6_80MS_INCL is set to '1' and RL_ATT_ADJ_GAIN_TYPE is set to '0', the base station shall set this field to the value of the nominal gain adjustment that the mobile station is to make for the transmission attributes with transmission rate 14400 bits/s, convolutional code and 80ms frame. The base station shall set the value in the range from –48 to 48 inclusive.

If RC4_RC6_40MS_INCL is set to '1' and RL_ATT_ADJ_GAIN_TYPE is set to '1', the base station shall set this field to the value of the pilot reference level adjustment that the mobile station is to make for the transmission attributes with transmission rate 14400 bits/s, convolutional code and 80ms frame.

The base station shall set this field to the correction factor expressed as a two's complement value in units of 0.125 dB.

RESERVED - Reserved bits.

The base station shall add reserved bits as needed in order to make the length of the entire record equal to an integer number of octets. The base station shall set these bits to '0'.

If RPC_ADJ_REC_TYPE is equal to '0010', the base station shall set type-specific fields as specified in Table 3.7.5.20-6.

Table 3.7.5.20-6. Type Specific Fields for RECORD_TYPE = '0010'

Fields	Length (Bits)
CODE_TYPE	1
RL_ATT_ADJ_GAIN_TYPE	1
RC3_RC5_20MS_INCL	1
RL_ATT_ADJ_GAIN_19200	0 or 8
RL_ATT_ADJ_GAIN_38400	0 or 8
RL_ATT_ADJ_GAIN_76800	0 or 8
RL_ATT_ADJ_GAIN_153600	0 or 8
RL_ATT_ADJ_GAIN_307200	0 or 8
RL_ATT_ADJ_GAIN_614400	0 or 8
RC4_RC6_20MS_INCL	1
RL_ATT_ADJ_GAIN_28800	0 or 8
RL_ATT_ADJ_GAIN_57600	0 or 8
RL_ATT_ADJ_GAIN_115200	0 or 8
RL_ATT_ADJ_GAIN_230400	0 or 8
RL_ATT_ADJ_GAIN_460800	0 or 8
RL_ATT_ADJ_GAIN_1036800	0 or 8
RC3_RC5_40MS_INCL	1
RL_ATT_ADJ_GAIN_19200_40MS	0 or 8
RL_ATT_ADJ_GAIN_38400_40MS	0 or 8
RL_ATT_ADJ_GAIN_76800_40MS	0 or 8
RL_ATT_ADJ_GAIN_153600_40MS	0 or 8
RL_ATT_ADJ_GAIN_307200_40MS	0 or 8
RC4_RC6_40MS_INCL	1
RL_ATT_ADJ_GAIN_28800_40MS	0 or 8
RL_ATT_ADJ_GAIN_57600_40MS	0 or 8
RL_ATT_ADJ_GAIN_115200_40MS	0 or 8

(continues on next page)

Fields	Length (Bits)
RL_ATT_ADJ_GAIN_230400_40MS	0 or 8
RL_ATT_ADJ_GAIN_518400_40MS	0 or 8
RC3_RC5_80MS_INCL	1
RL_ATT_ADJ_GAIN_19200_80MS	0 or 8
RL_ATT_ADJ_GAIN_38400_80MS	0 or 8
RL_ATT_ADJ_GAIN_76800_80MS	0 or 8
RL_ATT_ADJ_GAIN_153600_80MS	0 or 8
RC4_RC6_80MS_INCL	1
RL_ATT_ADJ_GAIN_28800_80MS	0 or 8
RL_ATT_ADJ_GAIN_57600_80MS	0 or 8
RL_ATT_ADJ_GAIN_115200_80MS	0 or 8
RL_ATT_ADJ_GAIN_259200_80MS	0 or 8

RESERVED	0-7 (if needed)

CODE_TYPE - Coding type indicator.

If the following corresponding gain adjustment fields apply for the convolutonal code, the base station shall set this field to ‘0’. If the following corresponding gain adjustment fields apply for the Turbo code, the base station shall set this field to ‘1’.

RL_ATT_ADJ_GAIN_TYPE - Reverse Link Attribute adjustment Gain value type indicator.

If the following corresponding gain adjustment fields are set to the value of the nominal attribute gain adjustment that the mobile station is to make for the corresponding transmission attributes (relative to Nominal_Attribute_Gain specified in [2]), the base station shall set this field to ‘0’. If the following corresponding gain adjustment fields are set to the value of the pilot reference level adjustment that the mobile station is to use for the corresponding transmission attributes (relative to Pilot_Reference_Level specified in [2]), the base station shall set this field to ‘1’.

RC3_RC5_20MS_INCL - Reverse Link Attribute Adjustment Gain for Radio Configuration 3 or 5 of 20ms frame included indicator.

If Reverse Link Attribute Adjustment Gain for Radio Configuration 3 or 5 of 20ms frame is included in this message, the base station shall set this field to ‘1’; otherwise, the base station shall set this field to ‘0’.

RL_ATT_ADJ_GAIN_19200 - Reverse Link Attribute Adjustment Gain for the transmission rate 19200 bits/s.

If RC3_RC5_20MS_INCL is set to ‘0’, the base station shall omit this field.

If RC3_RC5_20MS_INCL is set to ‘1’ and RL_ATT_ADJ_GAIN_TYPE is set to ‘0’, the base station shall set this field to the value of the nominal attribute gain adjustment that the mobile station is to make for the transmission attributes with transmission rate 19200 bits/s, and 20ms frame. The base station shall set the value in the range from –48 to 48 inclusive.

If RC3_RC5_20MS_INCL is set to ‘1’ and RL_ATT_ADJ_GAIN_TYPE is set to ‘1’, the base station shall set this field to the value of the pilot reference level adjustment that the mobile station is to make for the transmission attributes with transmission rate 19200 bits/s and 20ms frame.

The base station shall set this field to the correction factor expressed as a two’s complement value in units of 0.125 dB.

RL_ATT_ADJ_GAIN_38400 - Reverse Link Attribute Adjustment Gain for the transmission rate 38400 bits/s.

If RC3_RC5_20MS_INCL is set to ‘0’, the base station shall omit this field.

If RC3_RC5_20MS_INCL is set to ‘1’ and RL_ATT_ADJ_GAIN_TYPE is set to ‘0’, the base station shall set this field to the value of the nominal attribute gain adjustment that the mobile station is to make for the transmission attributes with transmission rate 38400 bits/s, and 20ms frame. The base station shall set the value in the range from –48 to 48 inclusive.

If RC3_RC5_20MS_INCL is set to ‘1’ and NORM_ATT_GAIN_TYPE is set to ‘1’, the base station shall set this field to the value of the pilot reference level adjustment that the mobile station is to make for the transmission attributes with transmission rate 38400 bits/s and 20ms frame.

The base station shall set this field to the correction factor expressed as a two’s complement value in units of 0.125 dB.

RL_ATT_ADJ_GAIN_76800 - Reverse Link Attribute Adjustment Gain for the transmission rate 76800 bits/s.

If RC3_RC5_20MS_INCL is set to ‘0’, the base station shall omit this field.

If RC3_RC5_20MS_INCL is set to '1' and RL_ATT_ADJ_GAIN_TYPE is set to '0', the base station shall set this field to the value of the nominal attribute gain adjustment that the mobile station is to make for the transmission attributes with transmission rate 76800 bits/s, and 20ms frame. The base station shall set the value in the range from –48 to 48 inclusive.

If RC3_RC5_20MS_INCL is set to '1' and RL_ATT_ADJ_GAIN_TYPE is set to '1', the base station shall set this field to the value of the pilot reference level adjustment that the mobile station is to make for the transmission attributes with transmission rate 76800 bits/s and 20ms frame.

The base station shall set this field to the correction factor expressed as a two's complement value in units of 0.125 dB.

RL_ATT_ADJ_GAIN_153600 - Reverse Link Attribute Adjustment Gain for the transmission rate 153600 bits/s.

If RC3_RC5_20MS_INCL is set to '0', the base station shall omit this field.

If RC3_RC5_20MS_INCL is set to '1' and NORM_ATT_GAIN_TYPE is set to '0', the base station shall set this field to the value of the nominal attribute gain adjustment that the mobile station is to make for the transmission attributes with transmission rate 153600 bits/s, and 20ms frame. The base station shall set the value in the range from –48 to 48 inclusive.

If RC3_RC5_20MS_INCL is set to '1' and NORM_ATT_GAIN_TYPE is set to '1', the base station shall set this field to the value of the pilot reference level adjustment that the mobile station is to make for the transmission attributes with transmission rate 153600 bits/s and 20ms frame.

The base station shall set this field to the correction factor expressed as a two's complement value in units of 0.125 dB.

RL_ATT_ADJ_GAIN_307200 - Reverse Link Attribute Adjustment Gain for the transmission rate 307200 bits/s.

If RC3_RC5_20MS_INCL is set to '0', the base station shall omit this field.

If RC3_RC5_20MS_INCL is set to '1' and RL_ATT_ADJ_GAIN_TYPE is set to '0', the base station shall set this field to the value of the nominal attribute gain adjustment that the mobile station is to make for the transmission attributes with transmission rate 307200 bits/s, and 20ms frame. The base station shall set the value in the range from –48 to 48 inclusive.

If RC3_RC5_20MS_INCL is set to '1' and RL_ATT_ADJ_GAIN_TYPE is set to '1', the base station shall set this field to the value of the pilot reference level adjustment that the mobile station is to make for the transmission attributes with transmission rate 307200 bits/s and 20ms frame.

The base station shall set this field to the correction factor expressed as a two's complement value in units of 0.125 dB.

RL_ATT_ADJ_GAIN_614400 - Reverse Link Attribute Adjustment Gain for the transmission rate 614400 bits/s.

If RC3_RC5_20MS_INCL is set to '0', the base station shall omit this field.

If RC3_RC5_20MS_INCL is set to '1' and RL_ATT_ADJ_GAIN_TYPE is set to '0', the base station shall set this field to the value of the nominal attribute gain adjustment that the mobile station is to make for the transmission attributes with transmission rate 614400 bits/s, and 20ms frame. The base station shall set the value in the range from –48 to 48 inclusive.

If RC3_RC5_20MS_INCL is set to '1' and RL_ATT_ADJ_GAIN_TYPE is set to '1', the base station shall set this field to the value of the pilot reference level adjustment that the mobile station is to make for the transmission attributes with transmission rate 614400 bits/s and 20ms frame.

The base station shall set this field to the correction factor expressed as a two's complement value in units of 0.125 dB.

RC4_RC6_20MS_INCL - Reverse Link Attribute Adjustment Gain for Radio Configuration 4 or 6 of 20ms frame included indicator.

If Reverse Link Attribute Adjustment Gain for Radio Configuration 4 or 6 of 20ms frame is included in this message, the base station shall set this field to '1'; otherwise, the base station shall set this field to '0'.

RL_ATT_ADJ_GAIN_28800 - Reverse Link Attribute Adjustment Gain for the transmission rate 28800 bits/s.

If RC4_RC6_20MS_INCL is set to '0', the base station shall omit this field.

If RC4_RC6_20MS_INCL is set to '1' and RL_ATT_ADJ_GAIN_TYPE is set to '0', the base station shall set this field to the value of the nominal attribute gain adjustment that the mobile station is to make for the transmission attributes with transmission rate 28800 bits/s, and 20ms frame. The base station shall set the value in the range from –48 to 48 inclusive.

If RC4_RC6_20MS_INCL is set to '1' and NORM_ATT_GAIN_TYPE is set to '1', the base station shall set this field to the value of the pilot reference level adjustment that the mobile station is to make for the transmission attributes with transmission rate 28800 bits/s and 20ms frame.

The base station shall set this field to the correction factor expressed as a two's complement value in units of 0.125 dB.

RL_ATT_ADJ_GAIN_57600 - Reverse Link Attribute Adjustment Gain for the transmission rate 57600 bits/s.

If RC4_RC6_20MS_INCL is set to '0', the base station shall omit this field.

If RC4_RC6_20MS_INCL is set to '1' and NORM_ATT_GAIN_TYPE is set to '0', the base station shall set this field to the value of the nominal attribute gain adjustment that the mobile station is to make for the transmission attributes with transmission rate 57600 bits/s, and 20ms frame. The base station shall set the value in the range from –48 to 48 inclusive.

If RC4_RC6_20MS_INCL is set to '1' and NORM_ATT_GAIN_TYPE is set to '1', the base station shall set this field to the value of the pilot reference level adjustment that the mobile station is to make for the transmission attributes with transmission rate 57600 bits/s and 20ms frame.

The base station shall set this field to the correction factor expressed as a two's complement value in units of 0.125 dB.

RL_ATT_ADJ_GAIN_115200 - Reverse Link Attribute Adjustment Gain for the transmission rate 115200 bits/s.

If RC4_RC6_20MS_INCL is set to '0', the base station shall omit this field.

If RC4_RC6_20MS_INCL is set to '1' and RL_ATT_ADJ_GAIN_TYPE is set to '0', the base station shall set this field to the value of the nominal attribute gain adjustment that the mobile station is to make for the transmission attributes with transmission rate 115200 bits/s, and 20ms frame. The base station shall set the value in the range from –48 to 48 inclusive.

If RC4_RC6_20MS_INCL is set to '1' and RL_ATT_ADJ_GAIN_TYPE is set to '1', the base station shall set this field to the value of the pilot reference level adjustment that the mobile station is to make for the transmission attributes with transmission rate 115200 bits/s and 20ms frame.

The base station shall set this field to the correction factor expressed as a two's complement value in units of 0.125 dB.

RL_ATT_ADJ_GAIN_230400 - Reverse Link Attribute Adjustment Gain for the transmission rate 230400 bits/s.

If RC4_RC6_20MS_INCL is set to ‘0’, the base station shall omit this field.

If RC4_RC6_20MS_INCL is set to ‘1’ and RL_ATT_ADJ_GAIN_TYPE is set to ‘0’, the base station shall set this field to the value of the nominal attribute gain adjustment that the mobile station is to make for the transmission attributes with transmission rate 230400 bits/s, and 20ms frame. The base station shall set the value in the range from –48 to 48 inclusive.

If RC4_RC6_20MS_INCL is set to ‘1’ and RL_ATT_ADJ_GAIN_TYPE is set to ‘1’, the base station shall set this field to the value of the pilot reference level adjustment that the mobile station is to make for the transmission attributes with transmission rate 230400 bits/s and 20ms frame.

The base station shall set this field to the correction factor expressed as a two’s complement value in units of 0.125 dB.

RL_ATT_ADJ_GAIN_460800 - Reverse Link Attribute Adjustment Gain for the transmission rate 460800 bits/s.

If RC4_RC6_20MS_INCL is set to ‘0’, the base station shall omit this field.

If RC4_RC6_20MS_INCL is set to ‘1’ and RL_ATT_ADJ_GAIN_TYPE is set to ‘0’, the base station shall set this field to the value of the nominal attribute gain adjustment that the mobile station is to make for the transmission attributes with transmission rate 460800 bits/s, and 20ms frame. The base station shall set the value in the range from –48 to 48 inclusive.

If RC4_RC6_20MS_INCL is set to ‘1’ and RL_ATT_ADJ_GAIN_TYPE is set to ‘1’, the base station shall set this field to the value of the pilot reference level adjustment that the mobile station is to make for the transmission attributes with transmission rate 460800 bits/s and 20ms frame.

The base station shall set this field to the correction factor expressed as a two’s complement value in units of 0.125 dB.

RL_ATT_ADJ_GAIN_1036800- Reverse Link Attribute Adjustment Gain for the transmission rate 1036800 bits/s.

If RC4_RC6_20MS_INCL is set to ‘0’, the base station shall omit this field.

If RC4_RC6_20MS_INCL is set to ‘1’ and RL_ATT_ADJ_GAIN_TYPE is set to ‘0’, the base station shall set this field to the value of the nominal attribute gain adjustment that the mobile station is to make for the transmission attributes with transmission rate 1036800 bits/s, and 20ms frame. The base station shall set the value in the range from –48 to 48 inclusive.

If RC4_RC6_20MS_INCL is set to '1' and RL_ATT_ADJ_GAIN_TYPE is set to '1', the base station shall set this field to the value of the pilot reference level adjustment that the mobile station is to make for the transmission attributes with transmission rate 1306800 bits/s and 20ms frame.

The base station shall set this field to the correction factor expressed as a two's complement value in units of 0.125 dB.

RC3_RC5_40MS_INCL - Reverse Link Attribute Adjustment Gain for Radio Configuration 3 or 5 of 40ms frame included indicator.

If Reverse Link Attribute Adjustment Gain for Radio Configuration 3 or 5 of 40ms frame is included in this message, the base station shall set this field to '1'; otherwise, the base station shall set this field to '0'.

RL_ATT_ADJ_GAIN_19200_40MS - Reverse Link Attribute Adjustment Gain for the transmission rate 19200 bits/s.

If RC3_RC5_40MS_INCL is set to '0', the base station shall omit this field.

If RC3_RC5_40MS_INCL is set to '1' and RL_ATT_ADJ_GAIN_TYPE is set to '0', the base station shall set this field to the value of the nominal attribute gain adjustment that the mobile station is to make for the transmission attributes with transmission rate 19200 bits/s, and 40ms frame. The base station shall set the value in the range from –48 to 48 inclusive.

If RC3_RC5_40MS_INCL is set to '1' and RL_ATT_ADJ_GAIN_TYPE is set to '1', the base station shall set this field to the value of the pilot reference level adjustment that the mobile station is to make for the transmission attributes with transmission rate 19200 bits/s and 40ms frame.

The base station shall set this field to the correction factor expressed as a two's complement value in units of 0.125 dB.

RL_ATT_ADJ_GAIN_38400_40MS - Reverse Link Attribute Adjustment Gain for the transmission rate 38400 bits/s.

If RC3_RC5_40MS_INCL is set to '0', the base station shall omit this field.

If RC3_RC5_40MS_INCL is set to '1' and RL_ATT_ADJ_GAIN_TYPE is set to '0', the base station shall set this field to the value of the nominal attribute gain adjustment that the mobile station is to make for the transmission attributes with transmission rate 38400 bits/s, and 40ms frame. The base station shall set the value in the range from –48 to 48 inclusive.

If RC3_RC5_20MS_INCL is set to '1' and NORM_ATT_GAIN_TYPE is set to '1', the base station shall set this field to the value of the pilot reference level adjustment that the mobile station is to make for the transmission attributes with transmission rate 38400 bits/s and 40ms frame.

The base station shall set this field to the correction factor expressed as a two's complement value in units of 0.125 dB.

RL_ATT_ADJ_GAIN_76800_40MS - Reverse Link Attribute Adjustment Gain for the transmission rate 76800 bits/s.

If RC3_RC5_40MS_INCL is set to '0', the base station shall omit this field.

If RC3_RC5_40MS_INCL is set to '1' and RL_ATT_ADJ_GAIN_TYPE is set to '0', the base station shall set this field to the value of the nominal attribute gain adjustment that the mobile station is to make for the transmission attributes with transmission rate 76800 bits/s, and 40ms frame. The base station shall set the value in the range from –48 to 48 inclusive.

If RC3_RC5_40MS_INCL is set to '1' and RL_ATT_ADJ_GAIN_TYPE is set to '1', the base station shall set this field to the value of the pilot reference level adjustment that the mobile station is to make for the transmission attributes with transmission rate 76800 bits/s and 40ms frame.

The base station shall set this field to the correction factor expressed as a two's complement value in units of 0.125 dB.

RL_ATT_ADJ_GAIN_153600_40MS - Reverse Link Attribute Adjustment Gain for the transmission rate 153600 bits/s.

If RC3_RC5_40MS_INCL is set to '0', the base station shall omit this field.

If RC3_RC5_40MS_INCL is set to '1' and NORM_ATT_GAIN_TYPE is set to '0', the base station shall set this field to the value of the nominal attribute gain adjustment that the mobile station is to make for the transmission attributes with transmission rate 153600 bits/s, and 40ms frame. The base station shall set the value in the range from –48 to 48 inclusive.

If RC3_RC5_40MS_INCL is set to '1' and NORM_ATT_GAIN_TYPE is set to '1', the base station shall set this field to the value of the pilot reference level adjustment that the mobile station is to make for the transmission attributes with transmission rate 153600 bits/s and 40ms frame.

The base station shall set this field to the correction factor expressed as a two's complement value in units of 0.125 dB.

RL_ATT_ADJ_GAIN_307200_40MS - Reverse Link Attribute Adjustment Gain for the transmission rate 307200 bits/s.

If RC3_RC5_40MS_INCL is set to ‘0’, the base station shall omit this field.

If RC3_RC5_40MS_INCL is set to ‘1’ and RL_ATT_ADJ_GAIN_TYPE is set to ‘0’, the base station shall set this field to the value of the nominal attribute gain adjustment that the mobile station is to make for the transmission attributes with transmission rate 307200 bits/s, and 40ms frame. The base station shall set the value in the range from –48 to 48 inclusive.

If RC3_RC5_40MS_INCL is set to ‘1’ and RL_ATT_ADJ_GAIN_TYPE is set to ‘1’, the base station shall set this field to the value of the pilot reference level adjustment that the mobile station is to make for the transmission attributes with transmission rate 307200 bits/s and 40ms frame.

The base station shall set this field to the correction factor expressed as a two’s complement value in units of 0.125 dB.

RC4_RC6_40MS_INCL - Reverse Link Attribute Adjustment Gain for Radio Configuration 4 or 6 of 40ms frame included indicator.

If Reverse Link Attribute Adjustment Gain for Radio Configuration 4 or 6 of 40ms frame is included in this message, the base station shall set this field to ‘1’; otherwise, the base station shall set this field to ‘0’.

RL_ATT_ADJ_GAIN_28800_40MS - Reverse Link Attribute Adjustment Gain for the transmission rate 28800 bits/s.

If RC4_RC6_40MS_INCL is set to ‘0’, the base station shall omit this field.

If RC4_RC6_40MS_INCL is set to ‘1’ and RL_ATT_ADJ_GAIN_TYPE is set to ‘0’, the base station shall set this field to the value of the nominal attribute gain adjustment that the mobile station is to make for the transmission attributes with transmission rate 28800 bits/s, and 40ms frame. The base station shall set the value in the range from –48 to 48 inclusive.

If RC4_RC6_40MS_INCL is set to ‘1’ and NORM_ATT_GAIN_TYPE is set to ‘1’, the base station shall set this field to the value of the pilot reference level adjustment that the mobile station is to make for the transmission attributes with transmission rate 28800 bits/s and 40ms frame.

The base station shall set this field to the correction factor expressed as a two’s complement value in units of 0.125 dB.

RL_ATT_ADJ_GAIN_57600_40MS - Reverse Link Attribute Adjustment Gain for the transmission rate 57600 bits/s.

If RC4_RC6_40MS_INCL is set to ‘0’, the base station shall omit this field.

If RC4_RC6_40MS_INCL is set to '1' and NORM_ATT_GAIN_TYPE is set to '0', the base station shall set this field to the value of the nominal attribute gain adjustment that the mobile station is to make for the transmission attributes with transmission rate 57600 bits/s, and 40ms frame. The base station shall set the value in the range from –48 to 48 inclusive.

If RC4_RC6_40MS_INCL is set to '1' and NORM_ATT_GAIN_TYPE is set to '1', the base station shall set this field to the value of the pilot reference level adjustment that the mobile station is to make for the transmission attributes with transmission rate 57600 bits/s and 40ms frame.

The base station shall set this field to the correction factor expressed as a two's complement value in units of 0.125 dB.

RL_ATT_ADJ_GAIN_115200_40MS - Reverse Link Attribute Adjustment Gain for the transmission rate 115200 bits/s.

If RC4_RC6_40MS_INCL is set to '0', the base station shall omit this field.

If RC4_RC6_40MS_INCL is set to '1' and RL_ATT_ADJ_GAIN_TYPE is set to '0', the base station shall set this field to the value of the nominal attribute gain adjustment that the mobile station is to make for the transmission attributes with transmission rate 115200 bits/s, and 40ms frame. The base station shall set the value in the range from –48 to 48 inclusive.

If RC4_RC6_40MS_INCL is set to '1' and RL_ATT_ADJ_GAIN_TYPE is set to '1', the base station shall set this field to the value of the pilot reference level adjustment that the mobile station is to make for the transmission attributes with transmission rate 115200 bits/s and 40ms frame.

The base station shall set this field to the correction factor expressed as a two's complement value in units of 0.125 dB.

RL_ATT_ADJ_GAIN_230400_40MS - Reverse Link Attribute Adjustment Gain for the transmission rate 230400 bits/s.

If RC4_RC6_40MS_INCL is set to '0', the base station shall omit this field.

If RC4_RC6_40MS_INCL is set to '1' and RL_ATT_ADJ_GAIN_TYPE is set to '0', the base station shall set this field to the value of the nominal attribute gain adjustment that the mobile station is to make for the transmission attributes with transmission rate 230400 bits/s, and 40ms frame. The base station shall set the value in the range from –48 to 48 inclusive.

If RC4_RC6_40MS_INCL is set to '1' and RL_ATT_ADJ_GAIN_TYPE is set to '1', the base station shall set this field to the value of the pilot reference level adjustment that the mobile station is to make for the transmission attributes with transmission rate 230400 bits/s and 40ms frame.

The base station shall set this field to the correction factor expressed as a two's complement value in units of 0.125 dB.

RL_ATT_ADJ_GAIN_518400_40MS - Reverse Link Attribute Adjustment Gain for the transmission rate 518400 bits/s.

If RC4_RC6_40MS_INCL is set to '0', the base station shall omit this field.

If RC4_RC6_40MS_INCL is set to '1' and RL_ATT_ADJ_GAIN_TYPE is set to '0', the base station shall set this field to the value of the nominal attribute gain adjustment that the mobile station is to make for the transmission attributes with transmission rate 518400 bits/s, and 40ms frame. The base station shall set the value in the range from –48 to 48 inclusive.

If RC4_RC6_40MS_INCL is set to '1' and RL_ATT_ADJ_GAIN_TYPE is set to '1', the base station shall set this field to the value of the pilot reference level adjustment that the mobile station is to make for the transmission attributes with transmission rate 518400 bits/s and 40ms frame.

The base station shall set this field to the correction factor expressed as a two's complement value in units of 0.125 dB.

RC3_RC5_80MS_INCL - Reverse Link Attribute Adjustment Gain for Radio Configuration 3 or 5 of 80ms frame included indicator.

If Reverse Link Attribute Adjustment Gain for Radio Configuration 3 or 5 of 80ms frame is included in this message, the base station shall set this field to '1'; otherwise, the base station shall set this field to '0'.

RL_ATT_ADJ_GAIN_19200_80MS - Reverse Link Attribute Adjustment Gain for the transmission rate 19200 bits/s.

If RC3_RC5_80MS_INCL is set to '0', the base station shall omit this field.

If RC3_RC5_80MS_INCL is set to '1' and RL_ATT_ADJ_GAIN_TYPE is set to '0', the base station shall set this field to the value of the nominal attribute gain adjustment that the mobile station is to make for the transmission attributes with transmission rate 19200 bits/s, and 80ms frame. The base station shall set the value in the range from –48 to 48 inclusive.

If RC3_RC5_80MS_INCL is set to '1' and RL_ATT_ADJ_GAIN_TYPE is set to '1', the base station shall set this field to the value of the pilot reference level adjustment that the mobile station is to make for the transmission attributes with transmission rate 19200 bits/s and 80ms frame.

The base station shall set this field to the correction factor expressed as a two's complement value in units of 0.125 dB.

RL_ATT_ADJ_GAIN_38400_80MS - Reverse Link Attribute Adjustment Gain for the transmission rate 38400 bits/s.

If RC3_RC5_80MS_INCL is set to '0', the base station shall omit this field.

If RC3_RC5_80MS_INCL is set to '1' and RL_ATT_ADJ_GAIN_TYPE is set to '0', the base station shall set this field to the value of the nominal attribute gain adjustment that the mobile station is to make for the transmission attributes with transmission rate 38400 bits/s, and 80ms frame. The base station shall set the value in the range from –48 to 48 inclusive.

If RC3_RC5_80MS_INCL is set to '1' and NORM_ATT_GAIN_TYPE is set to '1', the base station shall set this field to the value of the pilot reference level adjustment that the mobile station is to make for the transmission attributes with transmission rate 38400 bits/s and 80ms frame.

The base station shall set this field to the correction factor expressed as a two's complement value in units of 0.125 dB.

RL_ATT_ADJ_GAIN_76800_80MS - Reverse Link Attribute Adjustment Gain for the transmission rate 76800 bits/s.

If RC3_RC5_80MS_INCL is set to '0', the base station shall omit this field.

If RC3_RC5_80MS_INCL is set to '1' and RL_ATT_ADJ_GAIN_TYPE is set to '0', the base station shall set this field to the value of the nominal attribute gain adjustment that the mobile station is to make for the transmission attributes with transmission rate 76800 bits/s, and 80ms frame. The base station shall set the value in the range from –48 to 48 inclusive.

If RC3_RC5_80MS_INCL is set to '1' and RL_ATT_ADJ_GAIN_TYPE is set to '1', the base station shall set this field to the value of the pilot reference level adjustment that the mobile station is to make for the transmission attributes with transmission rate 76800 bits/s and 80ms frame.

The base station shall set this field to the correction factor expressed as a two's complement value in units of 0.125 dB.

RL_ATT_ADJ_GAIN_153600_80MS - Reverse Link Attribute Adjustment Gain for the transmission rate 153600 bits/s.

If RC3_RC5_80MS_INCL is set to ‘0’, the base station shall omit this field.

If RC3_RC5_80MS_INCL is set to ‘1’ and RL_ATT_ADJ_GAIN_TYPE is set to ‘0’, the base station shall set this field to the value of the nominal attribute gain adjustment that the mobile station is to make for the transmission attributes with transmission rate 153600 bits/s, and 80ms frame. The base station shall set the value in the range from –48 to 48 inclusive.

If RC3_RC5_80MS_INCL is set to ‘1’ and RL_ATT_ADJ_GAIN_TYPE is set to ‘1’, the base station shall set this field to the value of the pilot reference level adjustment that the mobile station is to make for the transmission attributes with transmission rate 153600 bits/s and 80ms frame.

The base station shall set this field to the correction factor expressed as a two’s complement value in units of 0.125 dB.

RC4_RC6_80MS_INCL - Reverse Link Attribute Adjustment Gain for Radio Configuration 4 or 6 of 80ms frame included indicator.

If Reverse Link Attribute Adjustment Gain for Radio Configuration 4 or 6 of 80ms frame is included in this message, the base station shall set this field to ‘1’; otherwise, the base station shall set this field to ‘0’.

RL_ATT_ADJ_GAIN_28800_80MS - Reverse Link Attribute Adjustment Gain for the transmission rate 28800 bits/s.

If RC4_RC6_80MS_INCL is set to ‘0’, the base station shall omit this field.

If RC4_RC6_80MS_INCL is set to ‘1’ and RL_ATT_ADJ_GAIN_TYPE is set to ‘0’, the base station shall set this field to the value of the nominal attribute gain adjustment that the mobile station is to make for the transmission attributes with transmission rate 28800 bits/s, and 80ms frame. The base station shall set the value in the range from –48 to 48 inclusive.

If RC4_RC6_80MS_INCL is set to ‘1’ and NORM_ATT_GAIN_TYPE is set to ‘1’, the base station shall set this field to the value of the pilot reference level adjustment that the mobile station is to make for the transmission attributes with transmission rate 28800 bits/s and 80ms frame.

The base station shall set this field to the correction factor expressed as a two’s complement value in units of 0.125 dB.

RL_ATT_ADJ_GAIN_57600_80MS - Reverse Link Attribute Adjustment Gain for the transmission rate 57600 bits/s.

If RC4_RC6_80MS_INCL is set to ‘0’, the base station shall omit this field.

If RC4_RC6_80MS_INCL is set to '1' and NORM_ATT_GAIN_TYPE is set to '0', the base station shall set this field to the value of the nominal attribute gain adjustment that the mobile station is to make for the transmission attributes with transmission rate 57600 bits/s, and 80ms frame. The base station shall set the value in the range from –48 to 48 inclusive.

If RC4_RC6_80MS_INCL is set to '1' and NORM_ATT_GAIN_TYPE is set to '1', the base station shall set this field to the value of the pilot reference level adjustment that the mobile station is to make for the transmission attributes with transmission rate 57600 bits/s and 80ms frame.

The base station shall set this field to the correction factor expressed as a two's complement value in units of 0.125 dB.

RL_ATT_ADJ_GAIN_115200_80MS - Reverse Link Attribute Adjustment Gain for the transmission rate 115200 bits/s.

If RC4_RC6_80MS_INCL is set to '0', the base station shall omit this field.

If RC4_RC6_80MS_INCL is set to '1' and RL_ATT_ADJ_GAIN_TYPE is set to '0', the base station shall set this field to the value of the nominal attribute gain adjustment that the mobile station is to make for the transmission attributes with transmission rate 115200 bits/s, and 80ms frame. The base station shall set the value in the range from –48 to 48 inclusive.

If RC4_RC6_80MS_INCL is set to '1' and RL_ATT_ADJ_GAIN_TYPE is set to '1', the base station shall set this field to the value of the pilot reference level adjustment that the mobile station is to make for the transmission attributes with transmission rate 115200 bits/s and 80ms frame.

The base station shall set this field to the correction factor expressed as a two's complement value in units of 0.125 dB.

RL_ATT_ADJ_GAIN_259200_80MS - Reverse Link Attribute Adjustment Gain for the transmission rate 259200 bits/s.

If RC4_RC6_80MS_INCL is set to '0', the base station shall omit this field.

If RC4_RC6_80MS_INCL is set to '1' and RL_ATT_ADJ_GAIN_TYPE is set to '0', the base station shall set this field to the value of the nominal attribute gain adjustment that the mobile station is to make for the transmission attributes with transmission rate 259200 bits/s, and 80ms frame. The base station shall set the value in the range from –48 to 48 inclusive.

If RC4_RC6_80MS_INCL is set to '1' and RL_ATT_ADJ_GAIN_TYPE is set to '1', the base station shall set this field to the value of the pilot reference level adjustment that the mobile station is to make for the transmission attributes with transmission rate 259200 bits/s and 80ms frame.

The base station shall set this field to the correction factor expressed as a two's complement value in units of 0.125 dB.

RESERVED - Reserved bits.

The base station shall add reserved bits as needed in order to make the length of the entire record equal to an integer number of octets. The base station shall set these bits to '0'.

If RPC_ADJ_REC_TYPE is equal to '0011', the base station shall set type-specific fields as specified in Table 3.7.5.20-7.

Table 3.7.5.20-7. Type Specific Fields for RECORD_TYPE = '0011'

Fields	Length (Bits)
RL_CQICH_ATT_ADJ_GAIN_TYPE	1
RL_CQICH_ATT_ADJ_GAIN_HIGH_INCL	1
RL_CQICH_ATT_ADJ_GAIN_HIGH	0 or 8
RL_CQICH_ATT_ADJ_GAIN_LOW_INCL	1
RL_CQICH_ATT_ADJ_GAIN_LOW	0 or 8
RESERVED	0-7 (if needed)

RL_CQICH_ATT_ADJ_GAIN_TYPE - Reverse Channel Quality Indicator Channel attribute adjustment gain value type indicator

If the following fields are set to the nominal attribute gain adjustment values that the mobile station is to use for the transmission attributes (relative to Nominal_Attribute_Gain specified in [2]), the base station shall set this field to '0'. If the following fields are set to the pilot reference level adjustment values that the mobile station is to use for the transmission attributes (relative to Pilot_Reference Level specified in [2]), the base station shall set this field to '1'.

RL_CQICH_ATT_ADJ_GAIN_HIGH_INCL - Reverse Channel Quality Indicator Channel attribute adjustment gain for the high power level included indicator.

If the attribute adjustment gain for the high power level of Reverse Channel Quality Indicator Channel transmission is included in this message, the base station shall set this field to '1'; otherwise, the base station shall set this field to '0'.

RL_CQICH_ATT_ADJ_GAIN_HIGH - Attribute adjustment gain for Reverse Channel Quality Indicator Channel for the high Channel Quality Indicator gain power level.

If RL_CQICH_ATT_ADJ_GAIN_HIGH_INCL is set to '0', the base station shall omit this field; otherwise, the base station shall set this field as follows:

If RL_CQICH_ATT_ADJ_GAIN_TYPE is set to '0', the base station shall set this field to the value of the nominal attribute gain adjustment that the mobile station is to make for the transmission attributes for the high power level of R-CQICH. The base station shall set the value in the range from –40 to 16 inclusive.

If RL_CQICH_ATT_ADJ_GAIN_TYPE is set to '1', the base station shall set this field to the value of the pilot reference level adjustment that the mobile station is to make for the transmission attributes for the high power level of R-CQICH.

The base station shall set this field to the correction factor expressed as a two's complement value in units of 0.125 dB.

RL_CQICH_ATT_ADJ_GAIN_LOW_INCL - Reverse Channel Quality Indicator Channel attribute adjustment gain for the low power level included indicator.

If the attribute adjustment gain for the low power level of Reverse Channel Quality Indicator Channel transmission is included in this message, the base station shall set this field to '1'; otherwise, the base station shall set this field to '0'.

RL_CQICH_ATT_ADJ_GAIN_LOW - Attribute adjustment gain for Reverse Channel Quality Indicator Channel for the low Channel Quality Indicator gain power level.

If RL_CQICH_ATT_ADJ_GAIN_LOW_INCL is set to '0', the base station shall omit this field; otherwise, the base station shall set this field as follows:

If RL_CQICH_ATT_ADJ_GAIN_TYPE is set to '0', the base station shall set this field to the value of the nominal attribute gain adjustment that the mobile station is to make for the transmission attributes for the low power level of R-CQICH. The base station shall set the value in the range from –16 to 16 inclusive.

If RL_CQICH_ATT_ADJ_GAIN_TYPE is set to '1', the base station shall set this field to the value of the pilot reference level adjustment that the mobile station is to make for the transmission attributes for the low power level of R-CQICH.

The base station shall set this field to the correction factor expressed as a two's complement value in units of 0.125 dB.

If RPC_ADJ_REC_TYPE is equal to '0100', the base station shall set type-specific fields as specified in Table 3.7.5.20-8.

Table 3.7.5.20-8. Type Specific Fields for RECORD_TYPE = '0100'

Fields	Length (Bits)
REV_REQCH_ADJ_INCL	1
REV_REQCH_ADJ_GAIN	0 or 8
REV_SPICH_ADJ_INCL	1
REV_SPICH_ADJ_GAIN	0 or 8
REV_SPICH_EP_SIZE	0 or 4
REV_PDCCH_ADJ_INCL	1
REV_PDCCH_ADJ_GAIN	0 or 8
REV_PDCCH_ATTRIBUTE_ADJ_INCL	1
REV_PDCCH_EP_SIZE_NUM	0 or 4
{ (REV_PDCCH_EP_SIZE_NUM +1)	
{ (2)	
REV_PDCCH_ATTRIBUTE_ADJ_GAIN	8
} (2)	
} (REV_PDCCH_EP_SIZE_NUM +1)	
REV_PDCCH_BOOST_ADJ_INCL	1
{ (2)	
REV_PDCCH_BOOST_ADJ_GAIN	0 or 8
} (2)	
REV_PDCCH_PAYLOAD_ADJ_INCL	1
REV_PDCCH_EP_SIZE_NUM_1	0 or 4
{ (REV_PDCCH_EP_SIZE_NUM_1 +1)	
REV_PDCCH_PAYLOAD_ADJ_GAIN	8
} (REV_PDCCH_EP_SIZE_NUM_1 +1)	

Fields	Length (Bits)
REV_PDCH_ADJ_INCL	1
REV_PDCH_ADJ_GAIN	0 or 8
REV_PDCH_PAYLOAD_ADJ_INCL	1
REV_PDCH_EP_SIZE_NUM	0 or 4
{ (REV_PDCH_EP_SIZE_NUM +1)	
REV_PDCH_PAYLOAD_ADJ_GAIN	8
} (REV_PDCH_EP_SIZE_NUM +1)	
REV_PDCH_BOOST_ADJ_INCL	1
{ (2)	
REV_PDCH_BOOST_ADJ_GAIN	8
} (2)	
REV_PDCH_SUBPACKET_ADJ_INCL	1
REV_PDCH_RETRX_NUM	0 or 2
{ (REV_PDCH_RETRX_NUM+1)	
REV_PDCH_SUBPACKET_ADJ_GAIN	8
} (REV_PDCH_RETRX_NUM+1)	
REV_PDCH_ATTRIBUTE_ADJ_INCL	1
REV_PDCH_EP_SIZE_NUM_1	0 or 4
REV_PDCH_RETRX_NUM_1	0 or 2
{ (REV_PDCH_EP_SIZE_NUM_1 +1)	
{ (REV_PDCH_RETRX_NUM_1+1)	
{ (2)	
REV_PDCH_ATTRIBUTE_ADJ_GAIN	8
} (2)	
} (REV_PDCH_RETRX_NUM_1+1)	
} (REV_PDCH_EP_SIZE_NUM_1 +1)	
RESERVED	0-7 (if needed)

REV_REQCH_ADJ_INCL - Reverse Request Channel Adjustment included field.

If the attribute adjustment gains for the Reverse Request Channel are included in this message, the base station shall set this field to ‘1’; otherwise, the base station shall set this field to ‘0’.

REV_REQCH_ADJ_GAIN - Reverse Request Channel Adjustment Gain.

If REV_REQCH_ADJ_INCL is set to ‘0’, the base station shall omit this field; otherwise, the base station shall include this field, and set it as follows.

TThe base station shall set this field to the value of the nominal attribute gain adjustment that the mobile station is to make for the transmission attributes for the power level of R-REQCH.

The base station shall set the value in the range from –24 to 40 inclusive. The base station shall set this field to the correction factor expressed as a two’s complement value in units of 0.125 dB.

REV_SPICH_ADJ_INCL - Reverse Secondary Pilot Channel Adjustment included field.

If the attribute adjustment gains for the Reverse Secondary Pilot Channel are included in this message, the base station shall set this field to ‘1’; otherwise, the base station shall set this field to ‘0’.

REV_SPICH_ADJ_GAIN - Reverse Secondary Pilot Channel Adjustment Gain.

If REV_SPICH_ADJ_INCL is set to ‘0’, the base station shall omit this field; otherwise, the base station shall include this field, and set it as follows.

TThe base station shall set this field to the value of the nominal attribute gain adjustment that the mobile station is to make for the transmission attributes for the power level of R-SPICH.

The base station shall set the value in the range from –16 to 48 inclusive. The base station shall set this field to the correction factor expressed as a two’s complement value in units of 0.125 dB.

REV_SPICH_EP_SIZE-Minimum Encoder Packet Size for which the Reverse Secondary Pilot Channel is used.

If REV_SPICH_ADJ_INCL is set to ‘0’, the base station shall omit this field; otherwise, the base station shall include this field, and set it as follows.

The base station shall set this field to the minimum encoder packet size for which the Reverse Secondary Pilot Channel is used (see [2] and [3]).

This field shall take the values 0 to 10 corresponding to the encoder packet sizes 192, 408, 792, 1560, 3096, 4632, 6168, 9240, 12312, 15384, 18456 bits.

REV_PDCCH_ADJ_INCL - Reverse Packet Data Control Channel Adjustment included field.

If the attribute adjustment gains for the Reverse Packet Data Control Channel are included in this message, the base station shall set this field to ‘1’; otherwise, the base station shall set this field to ‘0’.

REV_PDCCH_ADJ_GAIN - Reverse Packet Data Control Channel Adjustment Gain.

If REV_PDCCH_ADJ_INCL is set to '0', the base station shall omit this field; otherwise, the base station shall include this field, and set it as follows.

The base station shall set this field to the value of the nominal attribute gain adjustment that the mobile station is to make for the transmission attributes for the power level of R-PDCCH.

The base station shall set the value in the range from –32 to 32 inclusive. The base station shall set this field to the correction factor expressed as a two's complement value in units of 0.125 dB.

REV_PDCCH_ATTRIBUTE_ADJ_INCL - Reverse Packet Data Control Channel Attrribute Adjustment included field.

If the attribute adjustment gains for the Reverse Packet Data Control Channel are included per encoder packet size and per boost mode in this message, the base station shall set this field to '1'; otherwise, the base station shall set this field to '0'.

REV_PDCCH_EP_SIZE_NUM - Number of occurrences of Reverse Packet Data Control Channel Attribute Adjustment Gains.

If REV_PDCCH_ATTRIBUTE_ADJ_INCL is set to '0', the base station shall omit this field; otherwise, the base station shall include this field, and set it as follows.

The base station shall set this field to one less than half the number of occurrences of the field included hereafter. The records are listed per encoder packet size, in the following ascending order: 192, 408, 792, 1560, 3096, 4632, 6168, 9240, 12312, 15384, 18456 bits.

If REV_PDCCH_ATTRIBUTE_ADJ_INCL is set to '1', the base station shall include REV_PDCCH_EP_SIZE_NUM+1 occurrences of the following record:

The base station shall include 2 occurrences of the following field. The first occurrence of this field is for the non-boosted mode, while the second is for the boosted mode.

REV_PDCCH_ATTRIBUTE_ADJ_GAIN - Reverse Packet Data Control Channel Attribute Adjustment Gain.

The base station shall set this field to the value of the nominal attribute gain adjustment that the mobile station is to make for the transmission attributes for the power level of R-PDCCH, for the i-th encoder packet size, and for the non-boosted and boosted modes.

The base station shall set the value in the range from –32 to 32 inclusive. The base station shall set this field to the correction factor expressed as a two's complement value in units of 0.125 dB.

REV_PDCCH_BOOST_ADJ_INCL - Reverse Packet Data Control Channel Boost

Adjustment included field.

If the attribute adjustment gains for the Reverse Packet Data Control Channel per boosted mode are included in this message, the base station shall set this field to '1'; otherwise, the base station shall set this field to '0'.

If REV_PDCCH_BOOST_ADJ_INCL is set to '1', the base station shall include two occurrences of the following record:

REV_PDCCH_BOOST_ADJ_GAIN - Reverse Packet Data Control Channel Boost Adjustment Gains.

The base station shall set this field to the value of the nominal attribute gain adjustment that the mobile station is to make for the transmission attributes for the power level of R-PDCCH, for the appropriate mode.

The base station shall set the value in the range from –32 to 32 inclusive.

The first occurrence of this field is for the non-boosted mode, while the second is for the boosted mode. The base station shall set this field to the correction factor expressed as a two's complement value in units of 0.125 dB.

REV_PDCCH_PAYLOAD_ADJ_INCL - Reverse Packet Data Control Channel Payload Attrribute Adjustment included field.

If the attribute adjustment gains for the Reverse Packet Data Control Channel are included per encoder packet size in this message, the base station shall set this field to '1'; otherwise, the base station shall set this field to '0'.

REV_PDCCH_EP_SIZE_NUM_1 - Number of occurrences of Reverse Packet Data Control Channel Payload Attribute Adjustment Gain records.

If REV_PDCCH_PAYLOAD_ADJ_INCL is set to '0', the base station shall omit this field; otherwise, the base station shall include this field, and set it as follows.

The base station shall set this field to one less than the number of occurrences of the field included hereafter. The fields are listed per encoder packet size, in the following ascending order: 192, 408, 792, 1560, 3096, 4632, 6168, 9240, 12312, 15384, 18456 bits.

If REV_PDCCH_PAYLOAD_ADJ_INCL is set to '1', the base station shall include (REV_PDCCH_EP_SIZE_NUM_1+1)x2 occurrences of the following record:

REV_PDCCH_PAYLOAD_ADJ_GAIN - Reverse Packet Data Control Channel Payload Attribute Adjustment Gain.

The base station shall set this field to the value of the nominal attribute gain adjustment that the mobile station is to make for the transmission attributes for the power level of R-PDCCH, for the i-th encoder packet size, and for the non-boosted and boosted modes. In each set for the i-th encoder packet, the first occurrence of this field is for the non-boosted mode, while the second is for the boosted mode.

The base station shall set the value in the range from –32 to 32 inclusive. The base station shall set this field to the correction factor expressed as a two's complement value in units of 0.125 dB.

REV_PDCH_ADJ_INCL - Reverse Packet Data Channel Adjustment included field.

If the attribute adjustment gains for the Reverse Packet Data Channelare included in this message, the base station shall set this field to '1'; otherwise, the base station shall set this field to '0'.

REV_PDCH_ADJ_GAIN - Reverse Packet Data Channel Adjustment Gain.

If REV_PDCH_ADJ_INCL is set to '0', the base station shall omit this field; otherwise, the base station shall include this field, and set it as follows.

The base station shall set this field to the value of the nominal attribute gain adjustment that the mobile station is to make for the transmission attributes for the power level of R-PDCH.

The base station shall set the value in the range from –40 to 56 inclusive. The base station shall set this field to the correction factor expressed as a two's complement value in units of 0.125 dB.

REV_PDCH_PAYLOAD_ADJ_INCL - Reverse Packet Data Channel Adjustment included field.

If the attribute adjustment gains for the Reverse Packet Data Channel are included per encoder packet size in this message, the base station shall set this field to '1'; otherwise, the base station shall set this field to '0'.

REV_PDCH_EP_SIZE_NUM - Number of occurrences of Reverse Packet Data Channel Payload Adjustment Gains.

If REV_PDCH_PAYLOAD_ADJ_INCL is set to '0', the base station shall omit this field; otherwise, the base station shall include this field, and set it as follows.

The base station shall set this field to one less than the number of occurrences of the following field. The fields are listed per encoder packet size, in the following ascending order: 192, 408, 792, 1560, 3096, 4632, 6168, 9240, 12312, 15384, 18456 bits.

If REV_PDCH_PAYLOAD_ADJ_INCL is set to '1', the base station shall include REV_PDCH_EP_SIZE_NUM+1 occurrences of the following record:

REV_PDCH_PAYLOAD_ADJ_GAIN - Reverse Packet Data Channel Payload Adjustment Gain.

The base station shall set this field to the value of the nominal attribute gain adjustment that the mobile station is to make for the transmission attributes for the power level of R-PDCH, for the i-th encoder packet size.

The base station shall set the value in the range from –40 to 56 inclusive. The base station shall set this field to the correction factor expressed as a two's complement value in units of 0.125 dB.

REV_PDCH_BOOST_ADJ_INCL - Reverse Packet Data Channel Adjustment included field.

If the attribute adjustment gains for the Reverse Packet Data Channel are included per boosted mode in this message, the base station shall set this field to '1'; otherwise, the base station shall set this field to '0'.

If REV_PDCH_BOOST_ADJ_INCL is set to '1', the base station shall include two occurrences of the following record. The first occurrence of this field is for the non-boosted mode, while the second is for the boosted mode.

REV_PDCH_BOOST_ADJ_GAIN - Reverse Packet Data Channel Boost-dependent Adjustment Gain.

The base station shall set this field to the value of the nominal attribute gain adjustment that the mobile station is to make for the transmission attributes for the power level of R-PDCH.

The base station shall set the value in the range from –40 to 56 inclusive. The first occurrence of this field is for the non-boosted mode, while the second is for the boosted mode. The base station shall set this field to the correction factor expressed as a two's complement value in units of 0.125 dB.

REV_PDCH_SUBPACKET_ADJ_INCL - Reverse Packet Data Channel Subpacket Adjustment included field.

If the attribute adjustment gains for the Reverse Packet Data Channel are included per subpacket transmission round in this message, the base station shall set this field to '1'; otherwise, the base station shall set this field to '0'.

REV_PDCH_RETRX_NUM - Number of occurrences of the Reverse Packet Data Channel Subpacket Adjustment Gains.

If REV_PDCH_SUBPACKET_ADJ_INCL is set to '0', the base station shall omit this field; otherwise, the base station shall include this field, and set it as follows.

The base station shall set this field to one less than the number of occurrences of the following field.

If REV_PDCH_SUBPACKET_ADJ_INCL is set to '1', the base station shall include (REV_PDCH_RETRX_NUM+1) occurrences of the following record:

REV_PDCH_SUBPACKET_ADJ_GAIN - Reverse Packet Data Channel Subpacket Adjustment Gain.

The base station shall set this field to the value of the nominal attribute gain adjustment that the mobile station is to make for the transmission attributes for the power level of R-PDCH on the i-th transmission round.

The base station shall set the value in the range from –40 to 56 inclusive. The base station shall set this field to the correction factor expressed as a two's complement value in units of 0.125 dB.

REV_PDCH_ATTRIBUTE_ADJ_INCL - Reverse Packet Data Channel Attribute Adjustment included field.

If the attribute adjustment gains for the Reverse Packet Data Channel are included per encoder packet size and per subpacket transmission round in this message, the base station shall set this field to '1'; otherwise, the base station shall set this field to '0'.

REV_PDCH_EP_SIZE_NUM_1 - Number of occurrences of the Reverse Packet Data Channel Attribute Adjustment Gains record.

If REV_PDCH_ATTRIBUTE_ADJ_INCL is set to '0', the base station shall omit this field; otherwise, the base station shall include this field, and set it as follows.

The base station shall set this field to one less than the number of occurrences of the following subrecord. The subrecords are listed per encoder packet size, in the following ascending order: 192, 408, 792, 1560, 3096, 4632, 6168, 9240, 12312, 15384, 18456 bits.

If REV_PDCH_ATTRIBUTE_ADJ_INCL is set to '1', the base station shall include (REV_PDCH_EP_SIZE_NUM_1+1) occurrences of the following subrecord:

REV_PDCH_RETRX_NUM_1 - Number of occurrences of the Reverse Packet Data Channel Subpacket Adjustment Gains.

The base station shall set this field to one less than the number of occurrences of the following field.

The base station shall include (REV_PDCH_RETRX_NUM_1+1) occurrences of the following record:

The base station shall include 2 occurrences of the following field. The first occurrence of this field is for the non-boosted mode, while the second is for the boosted mode.

REV_PDCH_ATTRIBUTE_ADJ_GAIN - Reverse Packet Data Channel Attribute Adjustment Gain.

The base station shall set this field to the value of the nominal attribute gain adjustment that the mobile station is to make for the transmission attributes for the power level of R-PDCH, for the i-th encoder packet size on a j-th transmission round, using the non-boosted or boosted mode.

The base station shall set the value in the range from –40 to 56 inclusive. The base station shall set this field to the correction factor expressed as a two's complement value in units of 0.125 dB.

RESERVED - Reserved bits.

The base station shall add reserved bits as needed in order to make the length of the entire record equal to an integer number of octets. The base station shall set these bits to '0'.

BCMC_LPM_INCL - BCMC Logical to Physical Mapping included indicator.

The base station shall set this field to '1' if BCMC Logical to Physical Mapping is included in this message; otherwise, the base station shall set this field to '0'.

BCMC_LPM_IND - BCMC Logical to Physical Mapping indicator.

If the BCMC_LPM_INCL field is set to '0', the base station shall omit this field; otherwise, the base station shall include this field and set it as follows:

The base station shall set this field to '01' or '10' as shown in Table 3.7.5.20-2 corresponding to the Logical to Physical Mapping indicator.

NUM_BCMC_PROGRAMS - Number of BCMC Programs

If the BCMC_LPM_IND field is not included or is included and is not set to '01', the base station shall omit this field; otherwise, the base station shall include this field and set it as follows:

The base station shall set this field to the number of BCMC programs included in this LPM record minus 1.

The base station shall include NUM_BCMC_PROGRAMS+1 occurrences of the following variable length record:

BCMC_PROGRAM_ID_LEN - Length of BCMC_PROGRAM_ID field

The base station shall set this field to one less than the length, in bits, of the BCMC_PROGRAM_ID of this program.

BCMC_PROGRAM_ID - BCMC program Identifier

The length of this field shall be one more than the value of BCMC_PROGRAM_ID_LEN bits.

The base station shall set this field to the identifier of the BCMC program to which this Logical to Physical Mapping entry applies.

BCMC_FLOW_DISCRIMINATOR_LEN - Length of BCMC_FLOW_DISCRIMINATOR field

The base station shall set this field to the length, in bits, of the BCMC_FLOW_DISCRIMINATOR of this program.

NUM_FLOW_DISCRIMINATOR - Number of flow discriminators

The length of this field shall be determined by the value of the BCMC_FLOW_DISCRIMINATOR_LEN as follows: if BCMC_FLOW_DISCRIMINATOR_LEN is set to '000', this field is omitted; otherwise, the length of this field shall be BCMC_FLOW_DISCRIMINATOR_LEN bits.

The base station shall set this field to the number of flow discriminators included for this program.

If NUM_FLOW_DISCRIMINATOR field is included, the base station shall include NUM_FLOW_DISCRIMINATOR+1 occurrences of the following variable length record; otherwise, the base station shall include 1 occurrence of the following variable length record:

BCMC_FLOW_DISCRIMINATOR – BCMC Flow discriminator.

The length of this field shall be determined by the value of the BCMC_FLOW_DISCRIMINATOR_LEN as follows: if BCMC_FLOW_DISCRIMINATOR_LEN is set to '000', this field is omitted; otherwise, the length of this field shall be BCMC_FLOW_DISCRIMINATOR_LEN bits.

The base station shall set this field to the BCMC flow discriminator to which this Logical to Physical Mapping entry applies.

PHYSICAL_RESOURCE - Physical resource identifier.

The base station shall set this field to the physical resource identifier '0000', '0001', '0010', '0011' as shown in Table 3.7.5.20-4 to which the logical BCMC traffic channel corresponding to BCMC_FLOW_ID specified in this BCMC Logical to Physical Mapping entry is to be mapped.

FORWARD_FLAG - Forward mapping indicator.

The base station shall set this field to '1' if the logical to physical channel mapping specified in this record applies to forward logical channels; otherwise, the base station shall set this field to '0'.

REVERSE_FLAG - Reverse mapping indicator.

The base station shall set this field to '1' if the logical to physical channel mapping specified in this record applies to reverse logical channels; otherwise, the base station shall set this field to '0'.

BSR_ID_INCL - BSR_ID included indicator.

The base station shall set this field to '1' if BSR_ID field is included in this message; otherwise, the base station shall set this field to '0' and include FOR_TRAFFIC, REV_TRAFFIC fields in this message.

BSR_ID - BCMC Service Reference Identifier

If the BSR_ID_INCL field is set to '0', the base station shall omit this field; otherwise, the base station shall include this field and set it as follows:

The base station shall set this field to the BCMC Service Reference identifier corresponding to this BCMC flow to which this Logical to Physical Mapping entry applies.

The base station shall not set this field to a value of 0 .

FOR_TRAFFIC - Forward Traffic Channel traffic type.

If the BSR_ID_INCL field is set to '1', the base station shall omit this field; otherwise, the base station shall include this field and set it as follows:

The base station shall set this field to the FOR_TRAFFIC code shown in Table 3.7.5.20-5 corresponding to the Forward Traffic Channel traffic type to be used with the BCMC flow to which this Logical to Physical Mapping entry applies.

Table 3.7.5.20-5. FOR_TRAFFIC Codes

FOR_TRAFFIC (binary)	Description
0000	The BCMC flow does not use Forward Traffic Channel traffic.
0001	The BCMC flow uses primary traffic on the Forward Traffic Channel.
0010	The BCMC flow uses secondary traffic on the Forward Traffic Channel.
0011	Reserved.
0100	The BCMC flow uses the Forward Traffic Channel, but does not classify the traffic as primary, secondary, or signaling traffic.
All other FOR_TRAFFIC codes are reserved.	

REV_TRAFFIC - Reverse Traffic Channel traffic type.

If the BSR_ID_INCL field is set to '1', the base station shall omit this field; otherwise, the base station shall include this field and set it as follows:

The base station shall set this field to the REV_TRAFFIC code shown in Table 3.7.5.20-6 corresponding to the Reverse Traffic Channel traffic type to be used with the BCMC flow to which this Logical to Physical Mapping entry applies.

Table 3.7.5.20-6. REV_TRAFFIC Codes

REV_TRAFFIC (binary)	Description
0000	The BCMC flow does not use Reverse Traffic Channel traffic.
0001	The BCMC flow uses primary traffic on the Reverse Traffic Channel.
0010	The BCMC flow uses secondary traffic on the Reverse Traffic Channel.
0011	Reserved.
0100	The BCMC flow uses the Reverse Traffic Channel, but does not classify the traffic as primary, secondary, or signaling traffic.
All other REV_TRAFFIC codes are reserved.	

REV_PDCH_PARMS_INCL - Reverse PDCH Parameters Included indicator.

The base station shall set this field to '1' if the reverse Packet Data Channel parameters are included; otherwise, the base station shall set this field to '0'.

REV_PDCH_PARMS_1_INCL - Reverse Packet Data Channel parameters subset included indicator.

If REV_PDCH_PARMS_INCL is omitted, or if it is included and set to '0', the base station shall omit this field; otherwise, the base station shall include this field, and set it as follows.

The base station shall set this field to '1' if the following R-PDCH parameters are included in this message; otherwise, the base station shall set this field to '0'.

REV_PDCH_MAX_AUTO_TPR - Reverse Packet Data Channel maximum traffic to pilot ratio for autonomous transmission.

If REV_PDCH_PARMS_1_INCL is omitted, or if it is included and set to '0', the base station shall omit this field; otherwise, the base station shall include this field and set it as follows.

The base station shall set this field to the maximum traffic to pilot ratio for autonomous transmission on the Reverse Packet Data Channel (see [2] and [3]).

The base station shall set this field to a value in the range 0 to 18 dB inclusive in units of 0.125 dB.

REV_PDCH_NUM_ARQ_ROUNDS_NORMAL - Maximum number of allowed ARQ rounds on the Reverse PDCH in the non-boosted mode.

If REV_PDCH_PARMS_1_INCL is set to '0', the base station shall omit this field; otherwise, the base station shall include this field and set it as follows.

The base station shall set this field to one less the maximum number of allowed ARQ rounds on the Reverse PDCH in the non-boosted mode. The base station shall set this field to 0, 1, or 2 corresponding to 1, 2, or 3 rounds respectively (See [3]).

REV_PDCH_OPER_PARMS_INCL - Reverse Packet Data Channel operational parameters included indicator.

If REV_PDCH_PARMS_INCL is set to '0', the base station shall omit this field; otherwise, the base station shall include this field and set it as follows.

The base station shall set this field to '1' if the following R-PDCH operational parameters are included in this message; otherwise, the base station shall set this field to '0'.

REV_PDCH_MAX_SIZE_ALLOWED_ENCODER_PACKET - Maximum Allowed Reverse PDCH encoder packet size.

If REV_PDCH_OPER_PARMS_INCL is omitted, or if it is included and set to '0', the base station shall omit this field; otherwise, the base station shall include this field and set it as follows.

The base station shall set this field to the maximum size encoder packet that the mobile station is allowed to use. (see [2] and [3]).

The base station shall set this field to a value in the range 0 to 10 inclusive, corresponding to the encoder packet sizes 192, 408, 792, 1560, 3096, 4632, 6168, 9240, 12312, 15384, and 18456 bits respectively.

REV_PDCH_DEFAULT_PERSISTENCE - Reverse Packet Data Channel default initial persistence.

If REV_PDCH_OPER_PARMS_INCL is omitted, or if it is included and set to '0', the base station shall omit this field; otherwise, the base station shall include this field and set it as follows:

The base station shall set this field to '1' if the mobile station is to be persistent at the call setup; otherwise, the base station shall set this field to '0' (See [3]).

REV_PDCH_RESET_PERSISTENCE - Reverse Packet Data Channel reset persistence indicator.

If REV_PDCH_OPER_PARMS_INCL is omitted, or if it is included and set to ‘0’, the base station shall omit this field; otherwise, the base station shall include this field and set it as follows:

The base station shall set this field to ‘1’ if, at the end of a persistent grant, the mobile station shall reset its persistent indicator to persistent; otherwise, the base station shall set this field to ‘0’ if the mobile station shall reset its persistent indicator to non-persistent (See [3]).

REV_PDCH_GRANT_PRECEDENCE - Reverse Packet Data Channel Grant Precedence Indicator.

If REV_PDCH_OPER_PARMS_INCL is omitted, or if it is included and set to ‘0’, the base station shall omit this field; otherwise, the base station shall include this field and set it as follows:

The base station shall set this field to ‘1’ if unicast Forward Grant Channel messages have precedence over Rate Control commands; otherwise, the base station shall set this field to ‘0’ to indicate that Rate Control down commands from non-serving sectors have precedence over Forward Grant Channel messages (see [3]).

REV_PDCH_MSIB_SUPPORTED - Reverse Packet Data Channel MSIB usage indicator.

If REV_PDCH_OPER_PARMS_INCL is omitted, or if it is included and set to ‘0’, the base station shall omit this field; otherwise, the base station shall include this field and set it as follows:

The base station shall set this field to ‘1’ if the mobile station is to use the MSIB bit on the Reverse Packet Data Control Channel; otherwise, the base station shall set this field to ‘0’(See [3]).

REV_PDCH_ALWAYS_ACK_FINAL_ROUND - Reverse Packet Data Channel Final Round Always Acknowledged

If REV_PDCH_OPER_PARMS_INCL is omitted, or if it is included and set to ‘0’, the base station shall omit this field; otherwise, the base station shall include this field and set it as follows:

The base station shall set this field to '1' if all of the following conditions are true:

- The Forward Acknowledgment Channel is assigned to the mobile station,
- The base station does not send an acknowledgment on the assigned Forward Acknowledgment Channel whenever a Reverse Packet Data Channel transmission is not successfully decoded on the last

ARQ round, and

- The base station sends an acknowledgment on the assigned Forward Acknowledgment Channel to the mobile station whenever a Reverse Packet Data Channel transmission is successfully decoded on the last ARQ round,

Otherwise, the base station shall set this field to '0'.

REV_PDCH_SOFT_HANDOFF_RESET_IND - Reverse Packet Data Channel soft handoff reset indicator.

If REV_PDCH_OPER_PARMS_INCL is omitted, or if it is included and set to ‘0’, the base station shall omit this field; otherwise, the base station shall include this field and set it as follows:

The base station shall set this field to ‘1’ if the mobile station is to initialize RPDCHCF when soft selection occurs in the FPDCHCF; otherwise, the base station shall set this field to ‘0’ (see [3]).

REV_PDCH_BOOST_PARMS_INCL - Reverse Packet Data Channel boosted mode parameters included indicator.

If REV_PDCH_PARMS_INCL is set to ‘0’, the base station shall omit this field; otherwise, the base station shall include this field and set it as follows.

The base station shall set this field to ‘1’ if the Reverse Packet Data Channel boosted mode parameters are included; otherwise, the base station shall set this field to ‘0’.

REV_PDCH_NUM_ARQ_ROUNDS_BOOST - Maximum number of allowed ARQ rounds on the Reverse PDCH in the boosted mode.

If REV_PDCH_BOOST_PARMS_INCL is omitted, or if it is included and set to ‘0’, the base station shall omit this field; otherwise, the base station shall include this field and set it as follows.

The base station shall set this field to one less the maximum number of allowed ARQ rounds on the Reverse PDCH in the boosted mode. The base station shall set this field to 0, 1, or 2 corresponding to 1, 2, or 3 rounds respectively (See [3]).

REV_PDCH_BOOST_OVERSHOOT - Reverse Packet Data Channel Boost Overshoot.

If REV_PDCH_BOOST_PARMS_INCL is omitted, or if it is included and set to ‘0’, the base station shall omit this field; otherwise, the base station shall include this field and set it as follows.

The base station shall set this field to the boosted QoS parameter that defines the overshoot allowed by boosted QoS on the Reverse Packet Data Channel (see [3]).

The base station shall set this field to a value in the range 0 to 3.875 dB inclusive in units of 0.125 dB.

REV_REQCH_ENABLED - Reverse Request Channel Enabled.

If REV_PDCH_PARMS_INCL is set to '0', the base station shall omit this field; otherwise, the base station shall include this field and set it as follows.

The base station shall set this field to '1' if the mobile station is to enable the Reverse Request Channel; otherwise, the base station shall set this field to '0'.

REV_REQCH_PARMS_INCL - Reverse Request Channel Parameters Included Indicator.

If REV_REQCH_ENABLED is omitted, or if it is included and is set to '0', the base station shall omit this field; otherwise, the base station shall include this field and set it as follows.

The base station shall set this field to '1' if the Reverse Request Channel Parameters are included hereafter; otherwise, the base station shall set this field to '0'.

REV_REQCH_QUICK_REPEAT_ALLOWED - Reverse Request Channel Quick Repeat Allowed indicator.

If REV_REQCH_PARMS_INCL is omitted, or if it is included and set to '0', the base station shall omit this field; otherwise, the base station shall include this field and set it as follows.

The base station shall set this field to '1' if quick repeats are allowed on the Reverse Request Channel; otherwise, the base station shall set this field to '0' (see [3]).

REV_REQCH_POWER_REPORTS_PARMS_INCL - Reverse Request Channel Power Report Parameters Included indicator.

If REV_REQCH_PARMS_INCL is omitted, or if it is included and set to '0', the base station shall omit this field; otherwise, the base station shall include this field and set it as follows.

The base station shall set this field to '1' if the parameters needed for power status reports are included hereafter; otherwise, the base station shall set this field to '0'.

REV_REQCH_POWER_HEADROOM_INCREASE - Reverse Request Channel Power headroom increase delta to trigger power report.

If REV_REQCH_POWER_REPORTS_PARMS_INCL is omitted, or if it is included and set to '0', the base station shall omit this field; otherwise, the base station shall include this field and set it as follows.

The base station shall set this field to the power headroom increase delta that triggers a power report (see [3]).

The base station shall set this field to a value in the range 0 to 18 dB inclusive in units of 1 dB, or to 31 which means plus infinity.

REV_REQCH_POWER_HEADROOM_DECREASE - Reverse Request Channel Power headroom decrease delta to trigger power report.

If REV_REQCH_POWER_REPORTS_PARMS_INCL is omitted, or if it is included and set to ‘0’, the base station shall omit this field; otherwise, the base station shall include this field and set it as follows.

The base station shall set this field to the power headroom decrease delta that triggers a power report (see [3]).

The base station shall set this field to a value in the range 0 to 18 dB inclusive in units of 1 dB, or to 31 which means plus infinity.

REV_REQCH_HEADROOM_DURATION - Reverse Request Channel minimum power headroom update trigger interval.

If REV_REQCH_POWER_REPORTS_PARMS_INCL is omitted, or if it is included and set to ‘0’, the base station shall omit this field; otherwise, the base station shall include this field and set it as follows.

The base station shall set this field to the minimum power headroom update trigger interval (see [3]).

The base station shall set this field to a value in the range 0 to 5.10 seconds inclusive in units of 20 ms.

REV_REQCH_MAX_POWER_UPDATE_DURATION - Reverse Request Channel maximum power headroom update trigger interval.

If REV_REQCH_POWER_REPORTS_PARMS_INCL is omitted, or if it is included and set to ‘0’, the base station shall omit this field; otherwise, the base station shall include this field and set it as follows.

The base station shall set this field to the maximum power headroom update trigger interval (see [3]).

The base station shall set this field to a value in the range 0.02 to 5.10 seconds inclusive in units of 20 ms, or to 0 which means plus infinity.

REV_PDCH_CRC_PARMS_INCL - Reverse Packet Data Channel Common Rate Control Parameters Included Indicator.

If REV_PDCH_PARMS_INCL is set to ‘0’, the base station shall omit this field; otherwise, the base station shall include this field and set it as follows.

The base station shall set this field to ‘1’ if Reverse Packet Data Channel Common Rate Control Parameters are included hereafter; otherwise, the base station shall set this field to ‘0’.

REV_PDCH_INIT_TARGET_TPR - Reverse Packet Data Channel initial target traffic to pilot ratio.

If REV_PDCH_CRC_PARMS_INCL is omitted, or if it is included and set to ‘0’, the base station shall omit this field; otherwise, the base station shall include this field and set it as follows.

The base station shall set this field to the initial target traffic to pilot ratio on the Reverse Packet Data Channel (see [3]).

The base station shall set this field to a value in the range 0 to 18 dB inclusive in units of 0.125 dB.

REV_PDCH_MAX_TARGET_TPR - Reverse Packet Data Channel maximum target traffic to pilot ratio.

If REV_PDCH_CRC_PARMS_INCL is omitted, or if it is included and set to '0', the base station shall omit this field; otherwise, the base station shall include this field and set it as follows.

The base station shall set this field to the maximum target traffic to pilot ratio on the Reverse Packet Data Channel (see [3]).

The base station shall set this field to a value in the range 0 to 18 dB inclusive in units of 0.125 dB.

REV_PDCH_QUICK_START_THRESH - Reverse Packet Data Channel quick start threshold.

If REV_PDCH_CRC_PARMS_INCL is omitted, or if it is included and set to '0', the base station shall omit this field; otherwise, the base station shall include this field and set it as follows.

The base station shall set this field to the quick start threshold on the Reverse Packet Data Channel (see [3]).

The base station shall set this field to a value in the range 0 to 9 dB inclusive in units of0.125 dB.

REV_PDCH_EP_MAP_LEN - Length of the Reverse PDCH Encoder Packet size map.

If REV_PDCH_CRC_PARMS_INCL is omitted, or if it is included and set to '0', the base station shall omit this field; otherwise, the base station shall include this field and set it as follows.

The base station shall set this field to '0' (the only Encoder Packet size map length supported is 11 bits).

REV_PDCH_EP_MAP - Number of Reverse PDCH Encoder Packet sizes.

If REV_PDCH_CRC_PARMS_INCL is omitted, or if it is included and set to '0', the base station shall omit this field; otherwise, the base station shall include this field and set it as follows.

The base station shall set the i-th bit to '1' for each encoder packet size for which a subrecord is included hereafter. The first 11 bits correspond to the following encoder packet sizes: 192, 408, 792, 1560, 3096, 4632, 6168, 9240, 12312, 15384, 18456 bits.

If REV_PDCH_CRC_PARMS_INCL is omitted, or if it is included and set to '0', the base station shall omit the following subrecord; otherwise, the base station shall include the following subrecord for each bit set to '1' in REV_PDCH_EP_MAP:

REV_PDCH_STEP_UP - Reverse Packet Data Channel Step "up" for rate control.

The base station shall set this field to the step “up” value of the rate control on the Reverse Packet Data Channel for the i-th encoder packet size signaled in REV_PDCH_EP_MAP (see [3]).

The base station shall set this field to a value in the range 0 to 7.96875 dB inclusive in units of 0.03125 dB.

REV_PDCH_STEP_DOWN - Reverse Packet Data Channel Step “down” for rate control.

The base station shall set this field to the step “down” value of rate control on the Reverse Packet Data Channel for the i-th encoder packet size signaled in REV_PDCH_EP_MAP (see [3]).

The base station shall set this field to a value in the range 0 to 7.96875 dB inclusive in units of 0.03125 dB.

REV_PDCH_SR_ID_MAP - Number of Reverse PDCH Encoder Packet sizes.

If REV_PDCH_PARMS_INCL is set to ‘0’, the base station shall omit this field; otherwise, the base station shall include this field and set it as follows.

The base station shall set the i-th bit to ‘1’ for each SR_ID associated with the Reverse Packet Data Channel. The LSB corresponds to SR_ID 0. The MSB corresponds to SR_ID 6.

The base station shall include the following subrecord for each bit set to ‘1’ in REV_PDCH_SR_ID_MAP:

REV_PDCH_BOOST_ALLOWED - Reverse PDCH TPR Boost Allowed indicator.

If REV_PDCH_PARMS_INCL is omitted or is included and is set to ‘0’, then the base station shall omit this field; otherwise, the base station shall include this field and set it as follows:

The base station shall set this field to ‘1’ if TPR (traffic to pilot ratio) power boost on the Reverse PDCH is allowed; otherwise, the base station shall set this field to ‘0’.

REV_PDCH_AUTO_ALLOWED - Reverse PDCH Autonomous Transmission Allowed indicator.

If REV_PDCH_PARMS_INCL is set to ‘0’, the base station shall omit this field; otherwise, the base station shall include this field and set it as follows.

The base station shall set this field to ‘1’ if autonomous transmission on the Reverse PDCH is allowed; otherwise, the base station shall set this field to ‘0’.

If REV_REQCH_PARMS_INCL, is not included or is included and is set to ‘0’, the base station shall omit the following fields; otherwise, the base station shall include the following subrecord as described hereafter;

- The base station shall include an occurrence of the following subrecord for each bit set to ‘1’ in REV_PDCH_SR_ID_MAP,

- The base station shall include an additional subrecord for the aggregate traffic across all SR_ID's, and,
- The base station shall set REV_REQCH_USE_POWER_REPORTS, REV_REQCH_USE_BUFFER_REPORTS, or REV_REQCH_USE_WATERMARKS to '1' in at least one of these subrecords.

REV_REQCH_MIN_DURATION - Reverse Request Channel Minimum Duration.

The base station shall set this field to the minimum duration between REQCH messages for this sr_id(see [3]).

The base station shall set this field to a value in the range 0 to 5.10 seconds inclusive in units of 20 ms.

REV_REQCH_USE_POWER_REPORTS - Reverse Request Channel Use of Power Status Reports indicator.

If REV_REQCH_POWER_REPORTS_PARMS_INCL is omitted, or if it is included and set to '0', the base station shall omit this field; otherwise, the base station shall include this field and set it as follows.

The base station shall set this field to '1' if power status reports are allowed; otherwise, the base station shall set this field to '0'.

REV_REQCH_USE_BUFFER_REPORTS - Reverse Request Channel Use of Buffer Status Reports indicator.

The base station shall set this field to '1' if buffer status reports are allowed; otherwise, the base station shall set this field to '0'.

REV_REQCH_USE_WATERMARKS - Reverse Request Channel Use of Watermark Reports indicator.

The base station shall set this field to '1' if watermark reports are allowed; otherwise, the base station shall set this field to '0'.

REV_REQCH_USE_DEFAULT_TAB - Reverse Packet Data Channel use default buffer size table indicator.

If REV_REQCH_USE_POWER_REPORTS is included and set to '1', or if REV_REQCH_USE_BUFFER_REPORTS is set to '1', or if REV_REQCH_USE_WATERMARKS is set to '1', the base station shall include this field and set it according to Table 3.7.5.20.7; otherwise, the base station shall omit this field.

Table 3.7.5.20.7. Encoding of REV_REQCH_USE_DEFAULT_TAB

REV_REQCH_USE_DEFAULT_TAB	Descriptions
'000'	Use the REV_REQCH_BUF_QUANT_PARM_1 field and REV_REQCH_BUF_QUANT_PARM_2 field to generate a buffer size table

‘001’	Use the default buffer size table as shown in Table Table 3.7.5.20.8
‘010’	Use the default buffer size table as shown in Table Table 3.7.5.20.9
‘011’ – ‘111’	Reserved

Table 3.7.5.20.8. Default Buffer Size Table (REV_REQCH_USE_DEFAULT_TAB = ‘001’)

Row	Buffer Size (in units of 96 bytes)
1	1
2	2
3	4
4	6
5	8
6	12
7	16
8	24
9	32
10	64
11	80
12	96
13	128

Table 3.7.5.20.9. Default Buffer Size Table (REV_REQCH_USE_DEFAULT_TAB = ‘010’)

Row	Buffer Size (in units of 512 bytes)
1	1
2	2
3	4
4	6
5	8
6	12

7	16
8	24
9	32
10	64
11	80
12	96
13	128

REV_REQCH_BUF_QUANT_PARM_1- Reverse Request Channel First Buffer Quantization Parameter.

If REV_REQCH_USE_DEFAULT_TAB is omitted, or if it is included and not set to '000', the base station shall omit this field; otherwise, the base station shall include this field and set it as follows.

The base station shall set this field to the first Reverse Packet Data Channel buffer size quantization parameter.

The base station shall not set this field to '0000000' if REV_REQCH_BUF_QUANT_PARM_2 is equal to '00000000' (see [3]).

REV_REQCH_BUF_QUANT_PARM_2- Reverse Request Channel Second Buffer Quantization Parameter.

If REV_REQCH_USE_DEFAULT_TAB is omitted, or if it is included and not set to '000', the base station shall omit this field; otherwise, the base station shall include this field and set it as follows.

The base station shall set this field to the second Reverse Packet Data Channel buffer size quantization parameter.

The base station shall not set this field to '0000000' if REV_REQCH_BUF_QUANT_PARM_1 is equal to '00000000' (see [3]).

REV_REQCH_HIGH_WATERMARK_1- Reverse Request Channel First High Watermark Parameter.

If REV_REQCH_USE_WATERMARKS is equal to '0', the base station shall omit this field; otherwise, the base station shall include this field and set it to the first high watermark parameter (for high priority reports) for this sr_id:

REV_REQCH_HIGH_WATERMARK_2 - Reverse Request Channel Second High Watermark Parameter.

If REV_REQCH_USE_WATERMARKS is equal to '0', the base station shall omit this field; otherwise, the base station shall include this field and set it to the second high watermark parameter (for high priority report) for this sr_id.

REV_REQCH_LOW_WATERMARK_1 - Reverse Request Channel First Low Watermark Parameter .

If REV_REQCH_USE_WATERMARKS is equal to ‘0’, the base station shall omit this field; otherwise, the base station shall include this field and set it to the first low watermark parameter (for high priority reports) for this sr_id.

REV_REQCH_LOW_WATERMARK_2 - Reverse Request Channel Second Low WatermarkParameter.

If REV_REQCH_USE_WATERMARKS is equal to ‘0’, the base station shall omit this field; otherwise, the base station shall include this field and set it to the second low watermark prameter (for high priority reports) for this sr_id.

REV_REQCH_CEILING_1 - Reverse Request Channel Ceiling first parameter.

If REV_REQCH_USE_WATERMARKS is equal to ‘0’, the base station shall omit this field; otherwise, the base station shall include this field and set it to the first high ceiling level parameter for this sr_id .

REV_REQCH_CEILING_2 - Reverse Request Channel Ceiling second parameter.

If REV_REQCH_USE_WATERMARKS is equal to ‘0’, the base station shall omit this field; otherwise, the base station shall include this field and set it to the second high ceiling level parameter for this sr_id.

REV_REQCH_FLOOR_1 - Reverse Request Channel Floor first parameter.

If REV_REQCH_USE_WATERMARKS is equal to ‘0’,the base station shall omit this field; otherwise, the base station shall include this field and set it to the first low floor level parameters for this sr_id.

REV_REQCH_FLOOR_2 - Reverse Request Channel Floor second parameter.

If REV_REQCH_USE_WATERMARKS is equal to ‘0’, the base station shall omit this field; otherwise, the base station shall include this field and set it to the second low floor level parameter for this sr_id.

RESERVED - Reserved bits.

The base station shall add reserved bits as needed in order to make the length of the entire record equal to an integer number of octets. The base station shall set these bits to ‘0’.

3.7.5.21 Multiple Character Extended Display

If P_REV_IN_USE is equal to or greater than nine, the base station shall not transmit this information record to the mobile station.

This information record allows the network to supply supplementary service multiple character display information that may be displayed by the mobile station.

Type-Specific Field	**Length (bits)**
MC_EXT_DISPLAY_IND	1
DISPLAY_TYPE	7
One or more occurrences of the following record:	
{	
DISPLAY_TAG	8
NUM_RECORD	8
NUM_RECORD occurrences of the following record	
{ (NUM_RECORD)	
DISPLAY_ENCODING	8
NUM_FIELDS	8
NUM_FIELDS occurrences of the following field:	
{ (NUM_FIELDS)	
CHARi	Variable
} (NUM_FIELDS)	
} (NUM_RECORDS)	
}	
RESERVED	0 - 7 (as needed)

MC_EXT_DISPLAY_IND - The indicator of Multiple Character Extended Display information record.

The base station shall set this field to '1'.

DISPLAY_TYPE - The type of display.

The base station shall set this field to the DISPLAY_TYPE value shown in Table 3.7.5.16-1 corresponding to the type of display, as defined in [8] Annex D.

DISPLAY_TAG - The indicator of the display information.

There are three types of display tags: mandatory control tags (Blank and Skip), display text tags, and optional control tags, see [8] Annex D.

The base station shall set this field to the DISPLAY_TAG value shown in Table 3.7.5.16-2 corresponding to the type of information contained in the following CHARi field, as defined in [8] Annex D.

NUM_RECORD - The number of records displaying.

The base station shall set this field to the number of records of display text.

If the DISPLAY_TAG field is equal to '10000000' or '10000001', the base station shall set this field to '00000000'.

The base station shall include NUM_RECORD occurrences of the following record.

DISPLAY_ENCODING - Display encoding.

The three most significant bits of this field shall be set to '000' and the five least significant bit of this field shall be set to a value as specified in [30] to indicate the display encoding type used.

Support of an encoding method does not imply that the entire encodable character set must be supported. In general, once the supported character set is determined, various subsets of the character set can be supported. If a message is comprised entirely of characters from a supported subset of a character set, it can be displayed. If a message contains an unsupported character of a character set, it can be discarded.

NUM_FIELDS - Number of occurrences of the CHARi field.

The base station shall set this field to the number of characters included in this record.

CHARi - Character.

The base station shall include NUM_FIELDS occurrences of this field, one for each character to be displayed.

RESERVED - Reserved bits.

The base station shall add reserved bits as needed in order to make the length of the entire record equal to an integer number of octets. The base station shall set these bits to '0'.

3.7.5.22 Call Waiting Indicator

This information record allows the base station to inform the mobile station that a call waiting call is available. This indicator may be used to suppress the generation of the local dial tone in mobile stations that provide locally generated dial tone.

Type-Specific Field	Length (bits)
CALL_WAITING_INDICATOR	1
RESERVED	7

CALL_WAITING_INDICATOR - Call waiting indicator.

The base station shall set this field to a '1' to indicate to the mobile station that a call is waiting. The base station shall set this field to a '0' if the call waiting call is not answered by the mobile station and the call waiting call goes away.

RESERVED - Reserved bits.

The base station shall set this field to '0000000'.

3.7.5.23 Enhanced Multiple Character Extended Display

This information record allows the network to supply supplementary service multiple character display information that may be displayed by the mobile station.

Type-Specific Field	**Length (bits)**
DISPLAY_TYPE	7
NUM_DISPLAYS	8
NUM_DISPLAYS+1 occurrences of the following variable length record:	
{ (NUM_DISPLAYS)+1	
DISPLAY_TAG	8
NUM_RECORD	8
NUM_RECORD occurrences of the following record	
{ (NUM_RECORD)	
RECORD_LENGTH	8
DISPLAY_ENCODING	8
NUM_FIELDS	8
NUM_FIELDS occurrences of the following field:	
{ (NUM_FIELDS)	
CHARi	Variable
} (NUM_FIELDS)	
RESERVED	0 - 7 (as needed)
} (NUM_RECORD)	
} (NUM_DISPLAYS)+1	
RESERVED_1	0 - 7 (as needed)

DISPLAY_TYPE - The type of display.

The base station shall set this field to the DISPLAY_TYPE value shown in Table 3.7.5.16-1 corresponding to the type of display, as defined in [8] Annex D.

NUM_DISPLAYS - The number of occurrences of display text included.

The base station shall set this field to one less then the number of occurrences of display text included.

The base station shall include NUM_DISPLAYS + 1 occurrences of the following variable-field record:

DISPLAY_TAG - The indicator of the display information.

There are three types of display tags: mandatory control tags (Blank and Skip), display text tags, and optional control tags, see [8] Annex D.

The base station shall set this field to the DISPLAY_TAG value shown in Table 3.7.5.16-2 corresponding to the type of information contained in the following CHARi field, as defined in [8] Annex D.

NUM_RECORD - The number of records displaying.

The base station shall set this field to the number of records of display text.

If the DISPLAY_TAG field is equal to '10000000' or '10000001', the base station shall set this field to '00000000'.

The base station shall include NUM_RECORD occurrences of the following record.

RECORD_LENGTH - Display text record length.

The base station shall set this field to the number of octets included in this display text record, of specified encoding, including this field.

DISPLAY_ENCODING - Display encoding.

The three most significant bits of this field shall be set to '000' and the five least significant bit of this field shall be set to a value as specified in [30] to indicate the display encoding type used.

Support of an encoding method does not imply that the entire encodable character set must be supported. In general, once the supported character set is determined, various subsets of the character set can be supported. If a message is comprised entirely of characters from a supported subset of a character set, it can be displayed. If a message contains an unsupported character of a character set, it can be discarded.

NUM_FIELDS - Number of occurrences of the CHARi field.

The base station shall set this field to the number of characters included in this record.

CHARi - Character.

The base station shall include NUM_FIELDS occurrences of this field, one for each character to be displayed.

RESERVED - Reserved bits.

The base station shall add reserved bits as needed in order to make the length of the entire record, of specified encoding, equal to an integer number of octets. The base station shall set these bits to '0'.

RESERVED_1 - Reserved bits for octet alignment.

The mobile station shall add the minimum number of bits necessary to make the record length in bits an integral multiple of 8. The mobile station shall set these bits to ‘0’.

3.7.6 Information Elements

3.7.6.1 Pilot Record Type Specific Fields

If PILOT_REC_TYPE is equal to '000', the Pilot Record Type Specific fields include the following fields:

Field	Length (bits)
TD_POWER_LEVEL	2
TD_MODE	2
RESERVED	4

TD_POWER_LEVEL - TD transmit power level.

The base station or mobile station shall set this field to the TD transmit power level relative to that of the Forward Pilot Channel, as specified in Table 3.7.6.1-1.

Table 3.7.6.1-1. TD Transmit Power Level

TD_POWER_LEVEL	Transmit Power Level
00	9 dB below the Forward Pilot Channel transmit power
01	6 dB below the Forward Pilot Channel transmit power
10	3 dB below the Forward Pilot Channel transmit power
11	Same as the Forward Pilot Channel transmit power

TD_MODE - Transmit Diversity mode.

The base station or mobile station shall set this field to the Transmit Diversity mode, as specified in Table 3.7.6.1-2.

Table 3.7.6.1-2. TD Mode

TD_MODE	Descriptions
00	OTD (Orthogonal Transmit Diversity) mode
01	STS (Space Time Spreading) mode
10-11	Reserved

RESERVED - Reserved bits.

The base station or mobile station shall set this field to '000000'.

If PILOT_REC_TYPE is equal to '001', the base station or mobile station shall include the following fields:

Field	Length (bits)
QOF	2
WALSH_LENGTH	3
AUX_PILOT_WALSH	WALSH_LENGTH+6
RESERVED	0 to 7 (as needed)

QOF - Quasi-orthogonal function index.

The base station or mobile station shall set this field to the index of the Quasi-orthogonal function (see [2]).

WALSH_LENGTH - Length of the Walsh Code.

The base station or mobile station shall set this field to the WALSH_LENGTH value shown in Table 3.7.6.1-3 corresponding to the length of the Walsh code for the pilot that is used as the Auxiliary pilot.

Table 3.7.6.1-3. Walsh Code Length

WALSH_LENGTH (binary)	Length of the Walsh Code
'000'	64
'001'	128
'010'	256
'011'	512
'100' – '111'	Reserved

AUX_PILOT_WALSH - Walsh Code for the Auxiliary Pilot.

The base station or mobile station shall set this field to the Walsh code corresponding to the Auxiliary pilot.

RESERVED - Reserved bits.

The base station or mobile station shall set all the bits of this field to '0' to make the entire record octet-aligned.

If PILOT_REC_TYPE is equal to '010', the base station or mobile station shall include the following fields:

Field	Length (bits)
QOF	2
WALSH_LENGTH	3
AUX_WALSH	WALSH_LENGTH+6
AUX_TD_POWER_LEVEL	2
TD_MODE	2
RESERVED	0 to 7 (as needed)

QOF - Quasi-orthogonal function index for the Auxiliary Transmit Diversity Pilot.

The base station or mobile station shall set this field to the index of the Quasi-orthogonal function (see [2]).

WALSH_LENGTH - Length of the Walsh code.

The base station or mobile station shall set this field to the WALSH_LENGTH value shown in 3.7.6.1-3 corresponding to the length of the Walsh code for the pilots that are used as Auxiliary pilot in the transmit diversity mode.

AUX_WALSH - Walsh Code for the Auxiliary Pilot.

The base station or mobile station shall set this field to the Walsh code corresponding to the Auxiliary Pilot.

AUX_TD_POWER_LEVEL - Auxiliary Transmit Diversity Pilot Power Level.

The base station or mobile station shall set this field to the Auxiliary Transmit Diversity Pilot transmit power level relative to that of the Auxiliary Pilot as specified in Table 3.7.6.1-4.

Table 3.7.6.1-4. Auxiliary Transmit Diversity Pilot Transmit Power Level

AUX_TD_POWER_LEVEL	Transmit Power Level
00	9 dB below the Auxiliary Pilot Channel transmit power
01	6 dB below the Auxiliary Pilot Channel transmit power
10	3 dB below the Auxiliary Pilot Channel transmit power
11	Same as the Auxiliary Pilot Channel transmit power

TD_MODE - Transmit Diversity mode.

The base station or mobile station shall set this field to the Transmit Diversity mode, as specified in Table 3.7.6.1-2.

RESERVED - Reserved bits.

The base station or mobile station shall set all the bits of this field to '0' to make the entire record octet-aligned.

If PILOT_REC_TYPE is equal to '011', the base station or mobile station shall include the following fields:

Field	Length (bits)
SR3_PRIMARY_PILOT	2
SR3_PILOT_POWER1	3
SR3_PILOT_POWER2	3

SR3_PRIMARY_PILOT – Primary SR3 pilot.

The base station or mobile station shall set this field to the value shown in Table 3.7.6.1-5 corresponding to the position of the primary SR3 pilot.

Table 3.7.6.1-5. The Position of the Primary SR3 Pilot

SR3_PRIMARY_PILOT (Binary)	Position
00	The primary pilot is on the lowest SR3 frequency
01	The primary pilot is on the center SR3 frequency
10	The primary pilot is on the highest SR3 frequency
11	Reserved

SR3_PILOT_POWER1 – The primary SR3 pilot power level relative to that of the pilot on the lower frequency of the two remaining SR3 frequencies.

The base station or mobile station shall set this field to the value shown in Table 3.7.6.1-6 corresponding to the power level of the primary pilot with respect to the pilot on the lower frequency of the two remaining SR3 frequencies.

Table 3.7.6.1-6. Pilot Transmission Power

SR3_PILOT_POWER1, SR3_PILOT_POWER2 (Binary)	Relative Transmission Power
000	0dB
001	1dB
010	2dB
011	3dB
100	4dB
101	5dB
110	6dB
111	7dB

SR3_PILOT_POWER2 – The primary SR3 pilot power level relative to that of the pilot on the higher frequency of the two remaining SR3 frequencies.

The base station or mobile station shall set this field to the value shown in Table 3.7.6.1-6 corresponding to the power level of the primary pilot with respect to the pilot on the higher frequency of the two remaining SR3 frequencies.

If PILOT_REC_TYPE is equal to '100', the base station or mobile station shall include the following fields:

Field	**Length (bits)**
SR3_PRIMARY_PILOT	2
SR3_PILOT_POWER1	3
SR3_PILOT_POWER2	3
QOF	2
WALSH_LENGTH	3
AUX_PILOT_WALSH	WALSH_LENGTH+6
ADD_INFO_INCL1	1
QOF1	0 or 2
WALSH_LENGTH1	0 or 3
AUX_PILOT_WALSH1	0 or WALSH_LENGTH1+6
ADD_INFO_INCL2	1
QOF2	0 or 2
WALSH_LENGTH2	0 or 3
AUX_PILOT_WALSH2	0 or WALSH_LENGTH2+6
RESERVED	0 – 7 (as needed)

SR3_PRIMARY_PILOT – Primary SR3 pilot.

The base station or mobile station shall set this field to the value shown in Table 3.7.6.1-5 corresponding to the position of the primary SR3 pilot.

SR3_PILOT_POWER1 – The primary SR3 pilot power level relative to that of the pilot on the lower frequency of the two remaining SR3 frequencies.

The base station or mobile station shall set this field to the value shown in Table 3.7.6.1-6 corresponding to the power level of the primary pilot with respect to the pilot on the lower frequency of the two remaining SR3 frequencies.

SR3_PILOT_POWER2 – The primary SR3 pilot power level relative to that of the pilot on the higher frequency of the two remaining SR3 frequencies.

The base station or mobile station shall set this field to the value shown in Table 3.7.6.1-6 corresponding to the power level of the primary pilot with respect to the pilot on the higher frequency of the two remaining SR3 frequencies.

QOF – Quasi-orthogonal function index.

The base station or mobile station shall set this field to the index of the Quasi-orthogonal function (see [2]) on the frequency of the primary pilot.

WALSH_LENGTH – Length of the Walsh Code.

The base station or mobile station shall set this field to the WALSH_LENGTH value shown in Table 3.7.6.1-3 corresponding to the length of the Walsh code for the pilot that is used as the Auxiliary pilot on the frequency of the primary pilot.

AUX_PILOT_WALSH – Walsh Code for the Auxiliary Pilot.

The base station or mobile station shall set this field to the Walsh code corresponding to the Auxiliary pilot on the frequency of the primary pilot.

ADD_INFO_INCL1 – Additional information included for the pilot on the lower frequency of the two remaining SR3 frequencies.

If the additional information for the pilot on the lower frequencies of the two remaining SR3 frequencies is the same as pilot on the primary frequency, the base station or mobile station shall set this field to ‘0’; otherwise, the base station or mobile station shall set this field to ‘1’.

QOF1 – Quasi-orthogonal function index for the pilot on the lower frequency of the two remaining SR3 frequencies.

If ADD_INFO_INCL1 is set to ‘0’, the base station or mobile station shall omit this field; otherwise, the base station or mobile station shall set this field as follows:

The base station or mobile station shall set this field to the index of the Quasi-orthogonal function (see [2]) on the lower frequency of the two remaining SR3 frequencies.

WALSH_LENGTH1 - Length of the Walsh Code for the pilot on the lower frequency of the two remaining SR3 frequencies.

If ADD_INFO_INCL1 is set to ‘0’, the base station or mobile station shall omit this field; otherwise, the base station or mobile station shall set this field as follows:

The base station or mobile station shall set this field to the WALSH_LENGTH value shown in Table 3.7.6.1-3 corresponding to the length of the Walsh code for the pilot that is used as the Auxiliary pilot on the lower frequency of the two remaining SR3 frequencies.

AUX_PILOT_WALSH1 - Walsh Code for the Auxiliary Pilot on the lower frequency of the two remaining SR3 frequencies.

If ADD_INFO_INCL1 is set to ‘0’, the base station or mobile station shall omit this field; otherwise, the base station or mobile station shall set this field as follows:

The base station or mobile station shall set this field to the Walsh code corresponding to the Auxiliary pilot on the lower frequency of the two remaining SR3 frequencies.

ADD_INFO_INCL2 - Additional information included for the pilot on the higher frequency of the two remaining SR3 frequencies.

If the additional information for the pilot on the higher frequencies of the two remaining SR3 frequencies is the same as pilot on the primary frequency, the base station or mobile station shall set this field to ‘0’; otherwise, the base station or mobile station shall set this field to ‘1’.

QOF2 - Quasi-orthogonal function index for the pilot on the higher frequency of the two remaining SR3 frequencies.

If ADD_INFO_INCL2 is set to ‘0’, the base station or mobile station shall omit this field; otherwise, the base station or mobile station shall set this field as follows:

The base station or mobile station shall set this field to the index of the Quasi-orthogonal function (see [2]) on the higher frequency of the two remaining SR3 frequencies.

WALSH_LENGTH2 - Length of the Walsh Code for the pilot on the higher frequency of the two remaining SR3 frequencies.

If ADD_INFO_INCL2 is set to ‘0’, the base station or mobile station shall omit this field; otherwise, the base station or mobile station shall set this field as follows:

The base station or mobile station shall set this field to the WALSH_LENGTH value shown in Table 3.7.6.1-3 corresponding to the length of the Walsh code for the pilot that is used as the Auxiliary pilot on the higher frequency of the two remaining SR3 frequencies.

AUX_PILOT_WALSH2 - Walsh Code for the Auxiliary Pilot on the higher frequency of the two remaining SR3 frequencies.

If ADD_INFO_INCL2 is set to ‘0’, the base station or mobile station shall omit this field; otherwise, the base station or mobile station shall set this field as follows:

The base station or mobile station shall set this field to the Walsh code corresponding to the Auxiliary pilot on the higher frequency of the two remaining SR3 frequencies.

RESERVED - Reserved bits.

The base station or mobile station shall set all the bits of this field to ‘0’ to make the entire record octet-aligned.

This page intentionally left blank.

ANNEX A RESERVED

This page intentionally left blank.

ANNEX B CDMA CALL FLOW EXAMPLES

This is an informative annex which contains examples of call flow. The diagrams follow these conventions:

- All messages are received without error
- Receipt of messages is not shown except in the handoff examples
- Acknowledgments are not shown
- Optional authentication procedures are not shown
- Optional private long code transitions are not shown

For the call flow diagrams B-22 through B-31, the following conventions hold:

- The following message acronyms are defined:

  ERRM: Extended Release Response Message

  ERRMM: Extended Release Response Mini Message

  RRM: Resource Request Message

  RRMM: Resource Request Mini Message

  RRRM: Resource Release Request Message

  RRRMM: Resource Release Request Mini Message

  SreqM: Service Request Message

  SCRM: Supplemental Channel Request Message

  SCRMM: Supplemental Channel Request Mini Message

  ERM: Extended Release Message

  ERMM: Extended Release Mini Message

  RAM: Resource Allocation Message

  RAMM: Resource Allocation Mini Message

  SCM: Service Connect Message

  GHDM: General Handoff Direction Message

  UHDM: Universal Handoff Direction Message

  ESCAM: Extended Supplemental Channel Assignment Message

  FSCAMM: Forward Supplemental Channel Assignment Mini Message

  RSCAMM: Reverse Supplemental Channel Assignment Mini Message

HCM: (Extended) Handoff Complete Message

Mobile Station				Base Station
• Detects user-initiated call. • Sends *Origination Message*.	>	Access Channel	>	• Sets up Traffic Channel. • Begins sending null Traffic Channel data.
• Sets up Traffic Channel. • Receives N_{5m} consecutive valid frames.	<	Paging Channel	<	• Sends *Channel Assignment Message*.
• Begins sending the Traffic Channel preamble.				• Acquires the Reverse Traffic Channel.
• Begins transmitting null Traffic Channel data.	<	Forward Traffic Channel	<	• Sends *Base Station Acknowledgment Order*.
• Begins processing primary traffic in accordance with Service Option 1.	<	Forward Traffic Channel	<	• Sends *Service Option Response Order*.
Optional • Sends *Origination Continuation Message*.	>	Reverse Traffic Channel	>	Optional
Optional • Applies ring back in audio path.	<	Forward Traffic Channel	<	Optional • Sends *Alert With Information Message* (ring back tone).
Optional • Removes ring back from audio path. *(User conversation)*	<	Forward Traffic Channel	<	Optional • Sends *Alert With Information Message* (tones off). *(User conversation)*

Figure B-1A. Simple Call Flow, Mobile Station Origination Example Using Service Option Negotiation with Service Option 1

Mobile Station				Base Station
• Detects user-initiated call. • Sends *Origination Message*.	>	Access Channel	>	• Sets up Traffic Channel. • Begins sending null Traffic Channel data.
• Sets up Traffic Channel.	<	Paging Channel	<	• Sends *Channel Assignment Message*.
• Receives N_{5m} consecutive valid frames. • Begins sending the Traffic Channel preamble.				• Acquires the Reverse Traffic Channel.
• Begins transmitting null Traffic Channel data.	<	Forward Traffic Channel	<	• Sends *Base Station Acknowledgment Order*.
• Begins processing primary traffic in accordance with Service Option 1.	<	Forward Traffic Channel	<	• Sends *Service Connect Message*.
• Sends *Service Connect Completion Message*.	>	Reverse Traffic Channel	>	
Optional • Sends *Origination Continuation Message*.	>	Reverse Traffic Channel	>	Optional
Optional • Applies ring back in audio path.	<	Forward Traffic Channel	<	Optional • Sends *Alert With Information Message* (ring back tone).
Optional • Removes ring back from audio path. *(User conversation)*	<	Forward Traffic Channel	<	Optional • Sends *Alert With Information Message* (tones off). *(User conversation)*

Figure B-1B. Simple Call Flow, Mobile Station Origination Example Using Service Negotiation with Service Option 1

Mobile Station				Base Station
	<	Paging Channel	<	• Sends *General Page Message.*
• Sends *Page Response Message.*	>	Access Channel	>	• Sets up Traffic Channel. • Begins sending null Traffic Channel data.
• Sets up Traffic Channel.	<	Paging Channel	<	• Sends *Channel Assignment Message.*
• Receives N_{5m} consecutive valid frames.				
• Begins sending the Traffic Channel preamble.				• Acquires the Reverse Traffic Channel.
• Begins transmitting null Traffic Channel data.	<	Forward Traffic Channel	<	• Sends *Base Station Acknowledgment Order.*
• Begins processing primary traffic in accordance with Service Option 1.	<	Forward Traffic Channel	<	• Sends *Service Option Response Order.*
• Starts ringing.	<	Forward Traffic Channel	<	• Sends *Alert With Information Message* (ring).
• User answers call.				
• Stops ringing.				
• Sends *Connect Order.*	>	Reverse Traffic Channel	>	
• Begins sending primary traffic packets from the Service Option 1 application.				
(User conversation)				*(User conversation)*

Figure B-2A. Simple Call Flow, Mobile Station Termination Example Using Service Option Negotiation with Service Option 1

Mobile Station				Base Station
	<	Paging Channel	<	• Sends *General Page Message.*
• Sends *Page Response Message.*	>	Access Channel	>	• Sets up Traffic Channel. • Begins sending null Traffic Channel data.
• Sets up Traffic Channel. • Receives N_{5m} consecutive valid frames.	<	Paging Channel	<	• Sends *Channel Assignment Message.*
• Begins sending the Traffic Channel preamble.				• Acquires the Reverse Traffic Channel.
• Begins transmitting null Traffic Channel data.	<	Forward Traffic Channel	<	• Sends *Base Station Acknowledgment Order.*
• Begins processing primary traffic in accordance with Service Option 1.	<	Forward Traffic Channel	<	• Sends *Service Connect Message.*
• Sends *Service Connect Completion Message.*	>	Reverse Traffic Channel	>	
• Starts ringing. • User answers call. • Stops ringing.	<	Forward Traffic Channel	<	• Sends *Alert With Information Message* (ring).
• Sends *Connect Order.* • Begins sending primary traffic packets from the Service Option 1 application.	>	Reverse Traffic Channel	>	
(User conversation)				*(User conversation)*

Figure B-2B. Simple Call Flow, Mobile Station Termination Example Using Service Negotiation with Service Option 1

Mobile Station			Base Station
• Detects user-initiated disconnect. • Sends *Release Order*. • Enters the *System Determination Substate* of the *Mobile Station Initialization State*.	> Reverse Traffic Channel >		
	< Forward Traffic Channel <		• Sends *Release Order*.

Figure B-3. Simple Call Flow, Mobile Station Initiated Call Disconnect Example

Mobile Station			Base Station
			• Detects call disconnect. • Sends *Release Order*.
	< Forward Traffic Channel <		
• Sends *Release Order*. • Enters the *System Determination Substate* of the *Mobile Station Initialization State*.	> Reverse Traffic Channel >		

Figure B-4. Simple Call Flow, Base Station Initiated Call Disconnect Example

Mobile Station				Base Station
(User conversation) • Detects request for third party to be added to conversation. • Sends *Flash With Information Message* (dialed digits).	>	Reverse Traffic Channel	>	*(User conversation)* • MSC mutes speech.
Optional • Applies ring back in audio path.	<	Forward Traffic Channel	<	Optional • Sends *Alert With Information Message* (ring back tone). *(Called party answers)*
Optional • Removes ring back tone from audio path.	<	Forward Traffic Channel	<	Optional • Sends *Alert With Information Message* (tones off). • MSC unmutes speech from added party.
(Two-way conversation with added party; original party held) • Detects user request to establish three-way conversation. • Sends *Flash With Information Message.* *(Three-way conversation)*	>	Reverse Traffic Channel	>	*(Two-way conversation with added party; original party held)* • MSC reconnects original party. *(Three-way conversation)*

Figure B-5. Simple Call Flow, Three-Party Calling Example

Mobile Station				Base Station
(User conversation with first party)				*(User conversation with first party)* • Detects incoming call.
Optional • Applies call waiting tone in audio path.	<	Forward Traffic Channel	<	Optional • Sends *Alert or Flash With Information Message* (call waiting tone).
• Detects user request to change parties. • Sends *Flash With Information Message.*	>	Reverse Traffic Channel	>	• MSC mutes speech path to first party, connects second party.
(User conversation with second party; first party held) • Detects user request to change parties. • Sends *Flash With Information Message.*	>	Reverse Traffic Channel	>	*(User conversation with second party; first party held)* • MSC mutes speech path to second party, connects first party.
(User conversation with first party; second party held)				*(User conversation with first party; second party held)*

Figure B-6. Simple Call Flow, Call-Waiting Example

Figure B-7 illustrates call processing operations during a soft handoff from base station A to base station B. Figure B-8 illustrates call processing operations during a sequential soft handoff in which the mobile station is transferred from a pair of base stations A and B through a pair of base stations B and C to base station C.

Mobile Station				Base Station
(User conversation using A)				*(User conversation using A)*
• Pilot B strength exceeds T_ADD.				
• Sends *Pilot Strength Measurement Message.*	>	Reverse Traffic Channel	>	• A receives *Pilot Strength Measurement Message.* • B begins transmitting traffic on the Forward Traffic Channel and acquires the Reverse Traffic Channel.
• Receives *Extended Handoff Direction Message.*	<	Forward Traffic Channel	<	• A sends *Extended Handoff Direction Message* to use A and B.
• Acquires B; begins using Active Set {A,B}.				
• Sends *Handoff Completion Message.*	>	Reverse Traffic Channel	>	• A and B receive *Handoff Completion Message.*
• Handoff drop timer of pilot A expires.				
• Sends *Pilot Strength Measurement Message.*	>	Reverse Traffic Channel	>	• A and B receive *Pilot Strength Measurement Message.*
• Receives *Extended Handoff Direction Message.*	<	Forward Traffic Channel	<	• A and B send *Extended Handoff Direction Message* to use B only.
• Stops diversity combining; begins using Active Set {B}.				
• Sends *Handoff Completion Message.*	>	Reverse Traffic Channel	>	• A and B receive *Handoff Completion Message.* • A stops transmitting on the Forward Traffic Channel and receiving on the Reverse Traffic Channel.
(User conversation using B)				*(User conversation using B)*

Figure B-7. Call Processing During Soft Handoff

Mobile Station				Base Station
(User conversation using A and B)				*(User conversation using A and B)*
• Handoff drop timer of pilot A expires and pilot C strength exceeds T_ADD.				
• Sends *Pilot Strength Measurement Message.*	>	Reverse Traffic Channel	>	• A and B receive *Pilot Strength Measurement Message,* determine that new Active Set should contain B and C. • C begins transmitting traffic on the Forward Traffic Channel and acquires the Reverse Traffic Channel.
• Receives *Extended Handoff Direction Message.*	<	Forward Traffic Channel	<	• A and B send *Extended Handoff Direction Message* to use B and C.
• Stops diversity combining A and B; starts diversity combining B and C.				
• Sends *Handoff Completion Message.*	>	Reverse Traffic Channel	>	• A, B, and C receive *Handoff Completion Message.* • A stops transmitting on the Forward Traffic Channel and receiving on the Reverse Traffic Channel.
• Handoff drop timer of pilot B expires.				
• Sends *Pilot Strength Measurement Message.*	>	Reverse Traffic Channel	>	• B and C receive *Pilot Strength Measurement Message.*
(Continued on next page)				*(Continued on next page)*

Figure B-8. Call Processing During Sequential Soft Handoff (Part 1 of 2)

Mobile Station		Base Station
(Continued from previous page)		*(Continued from previous page)*
• Receives *Extended Handoff Direction Message*.	< Forward Traffic Channel <	• B and C send *Extended Handoff Direction Message* to use C only.
• Stops diversity combining; begins using Active Set {C}.		
• Sends *Handoff Completion Message*.	> Reverse Traffic Channel >	• B and C receive *Handoff Completion Message*. • B stops transmitting on the Forward Traffic Channel and receiving on the Reverse Traffic Channel.
(User conversation using C)		*(User conversation using C)*

Figure B-8. Call Processing During Sequential Soft Handoff (Part 2 of 2)

Mobile Station				Base Station
• User initiates priority call.				
• Sends *Origination Message*.	>	Access Channel	>	• Determines that no Traffic Channels are available and that call is a priority call.
• Indicates to user that priority call has been queued as a PACA call, and indicates queue position. Uses non-slotted mode operation while waiting for channel assignment.	<	Paging Channel	<	• Sends *PACA Message* to inform user that priority call has been queued as a PACA call, and to indicate queue position.
• Indicates updated queue position to user.	<	Paging Channel	<	• Sends *PACA Message* periodically to update PACA call queue position.
	<	Paging Channel	<	• Sends *PACA Message* to instruct mobile station to re-originate PACA call.
• Sends *Origination Message* again.	>	Access Channel	>	• Sets up Traffic Channel.
• Indicates to user that PACA call is proceeding, sets up Traffic Channel. • Receives N_{5m} consecutive valid frames.	<	Paging Channel	<	• Sends *Channel Assignment Message*.
• Begins sending Traffic Channel preamble.				• Acquires the Reverse Traffic Channel.
• Begins transmitting null Traffic Channel data.	<	Forward Traffic Channel	<	• Sends *Base Station Acknowledgment Order*.
• Begins processing primary traffic in accordance with Service Option 1.	<	Forward Traffic Channel	<	• Sends *Service Connect Message*.
• Sends *Service Connect Completion Message*.	>	Reverse Traffic Channel	>	
(Continued on next page)				*(Continued on next page)*

Figure B-9. PACA Call Processing (Part 1 of 2)

Mobile Station				Base Station
(Continued from previous page)				*(Continued from previous page)*
Optional • Sends *Origination Continuation Message*.	>	Reverse Traffic Channel	>	Optional
• Alerts user with distinct PACA alert. • User answers call. • Stops alerting.	<	Forward Traffic Channel	<	• Sends *Alert With Information Message* (distinct PACA alert).
• Sends *Connect Order*.	>	Reverse Traffic Channel	>	• Dials out PACA call.
Optional • Applies ring back in audio path.	<	Forward Traffic Channel	<	Optional • Sends *Alert With Information Message* (ring back tone).
Optional • Removes ring back from audio path.	<	Forward Traffic Channel	<	Optional • Sends *Alert With Information Message* (tones off).
(User conversation)				*(User conversation)*

Figure B-9. PACA Call Processing (Part 2 of 2)

Figure B-10 illustrates call processing operations for failure recovery for hard handoff on the same frequency. Figure B-11 illustrates call flow for failure recovery for inter-frequency handoff when the mobile station does not search the Candidate Frequency. Figures B-12 and B-13 show the call flow for mobile-assisted inter-frequency handoff (handoff preceded by searching of the Candidate Frequency Search Set by the mobile station), where the search is started by using the *Candidate Frequency Search Control Message*. Figures B-14 and B-15 illustrate call flow for inter-frequency handoff when failure recovery also includes searching the Candidate Frequency Search Set. In the periodic search examples (Figures B-13 and B-15), it is assumed that the mobile station performs a search of the Candidate Frequency Search Set in a single visit to the Candidate Frequency. Figures B-16 and B-17 illustrate the interaction of inter-frequency handoff operations with an ongoing periodic search of the Candidate Frequency Search Set.

Mobile Station				Base Station
(Serving Frequency = F1)				*(Serving Frequency = F1)* *(Decides to hand off mobile station to new Active Set)* *(Starts transmitting on Forward Traffic Channel corresponding to target Active Set)*
• Receives *General Handoff Direction Message.* Saves current configuration. Discontinues use of serving Active Set.	<	Forward Traffic Channel	<	• Sends *General Handoff Direction Message* (target Active Set disjoint from serving Active Set; RETURN_IF_HO_FAIL = '1'; Target Frequency = F1). *(Maintains Forward and Reverse Traffic Channels corresponding to serving Active Set)*
• Attempts to hand off to target Active Set. *(Handoff attempt fails)* • Restores old configuration. Resumes use of serving Active Set.				
• Sends *Candidate Frequency Search Report Message* reporting pilots in target Active Set.	>	Reverse Traffic Channel	>	• Receives *Candidate Frequency Search Report Message.* *(Discontinues use of target Active Set)*
(Continues communication using serving Active Set)				*(Continues communication using serving Active Set)*

Figure B-10. Call Flow for Same Frequency Hard Handoff Failure Recovery

Mobile Station				Base Station
(Serving Frequency = F1) *(Candidate Frequency Search Set is empty)*				*(Serving Frequency = F1)* *(Decides to hand off mobile station to Active Set on F2)* *(Starts transmitting on Forward Traffic Channel on F2)*
• Receives *General Handoff Direction Message.* Saves current configuration. Discontinues use of serving Active Set.	<	Forward Traffic Channel on F1	<	• Sends *General Handoff Direction Message* (target Active Set; RETURN_IF_HO_FAIL = '1'; Target Frequency = F2). *(Maintains Forward and Reverse Traffic Channels on F1)*
• Tunes to F2. Attempts to hand off to target Active Set. *(Handoff attempt fails)* • Re-tunes to F1. Restores old configuration. Resumes use of serving Active Set.				
• Sends *Candidate Frequency Search Report Message* reporting pilots in target Active Set. *(Continues communication on F1)*	>	Reverse Traffic Channel on F1	>	• Receives *Candidate Frequency Search Report Message.* *(Discontinues use of Active Set on F2)* *(Continues communication on F1)*

Figure B-11. Call Flow for Inter-Frequency Hard Handoff Failure Recovery without Search

Mobile Station				Base Station
(Serving Frequency = F1)				*(Serving Frequency = F1)*
• Receives *Candidate Frequency Search Request Message.*	<	Forward Traffic Channel on F1	<	• Sends *Candidate Frequency Search Request Message* (non-empty Search Set; Candidate Frequency = F2).
• Computes search time for Candidate Frequency Search Set.				
Sends *Candidate Frequency Search Response Message.*	>	Reverse Traffic Channel on F1	>	• Receives *Candidate Frequency Search Response Message.*
				(Decides to initiate single search)
• Receives *Candidate Frequency Search Control Message.*	<	Forward Traffic Channel on F1	<	• Sends *Candidate Frequency Search Control Message* (perform single search; Candidate Frequency = F2).
• Saves current configuration. Discontinues use of serving Active Set.				
• Tunes to F2.				
• Searches pilots in Candidate Frequency Search Set.				
• Re-tunes to F1. Restores old configuration. Resumes use of serving Active Set.				
• Sends *Candidate Frequency Search Report Message* reporting pilots in Candidate Frequency Search Set above CF_T_ADD.	>	Reverse Traffic Channel on F1	>	• Receives *Candidate Frequency Search Report Message.*
(Continues communication on F1)				*(Continues communication on F1)*
(Continued on next page)				*(Continued on next page)*

Figure B-12. Call Flow for Inter-Frequency Handoff (Single Search Using Candidate Frequency Search Control Message) (Part 1 of 2)

Mobile Station				Base Station
(Continued from previous page)				*(Continued from previous page)*
				(Decides to hand off mobile station to Active Set on F2)
				(Starts transmitting on Forward Traffic Channel on F2)
• Receives *General Handoff Direction Message.* Saves current configuration. Discontinues use of serving Active Set.	<	Forward Traffic Channel on F1	<	• Sends *General Handoff Direction Message* (RETURN_IF_HO_FAIL = '1'; Target Frequency = F2).
				(Maintains Forward and Reverse Traffic Channels on F1)
• Tunes to F2. Attempts to hand off to target Active Set.				
(Handoff attempt succeeds)				
(Starts transmitting on Reverse Traffic Channel on F2)				*(Starts receiving on Reverse Traffic Channel on F2)*
• Sends *Handoff Completion Message.*	>	Reverse Traffic Channel on F2	>	• Receives *Handoff Completion Message.*
				(Discontinues use of Active Set on F1)
(Continues communication on F2)				*(Continues communication on F2)*

Figure B-12. Call Flow for Inter-Frequency Handoff (Single Search Using Candidate Frequency Search Control Message) (Part 2 of 2)

Mobile Station				Base Station
(Serving Frequency = F1)				*(Serving Frequency = F1)*
• Receives *Candidate Frequency Search Request Message.*	<	Forward Traffic Channel on F1	<	• Sends *Candidate Frequency Search Request Message* (non-empty Search Set; Candidate Frequency = F2).
• Computes search time for Candidate Frequency Search Set.				
Sends *Candidate Frequency Search Response Message.*	>	Reverse Traffic Channel on F1	>	• Receives *Candidate Frequency Search Response Message.*
				(Decides to initiate periodic search)
• Receives *Candidate Frequency Search Control Message.* Initializes and enables periodic search timer.	<	Forward Traffic Channel on F1	<	• Sends *Candidate Frequency Search Control Message* (start periodic search; Candidate Frequency = F2).
(Periodic search timer running)				
• Performs a search of Candidate Frequency Search Set by executing the following actions before periodic search timer expires: – Saves current configuration. Discontinues use of serving Active Set. – Tunes to F2. – Searches pilots in Candidate Frequency Search Set.				
(Continued on next page)				*(Continued on next page)*

Figure B-13. Call Flow for Inter-Frequency Handoff (Periodic Search Using Candidate Frequency Search Control Message) (Part 1 of 3)

Mobile Station		Base Station
(Continued from previous page)		*(Continued from previous page)*
– Re-tunes to F1. Restores old configuration. Resumes use of serving Active Set.		
– Sends *Candidate Frequency Search Report Message* reporting pilots in Candidate Frequency Search Set above CF_T_ADD.	> Reverse Traffic Channel on F1 >	• Receives *Candidate Frequency Search Report Message.*
(Continues communication on F1)		*(Continues communication on F1)*
(Periodic search timer expires) • Initializes and enables periodic search timer.		
(Continues periodic search on F2 by repeating the search described above, once every search period)		
		(Decides to hand off mobile station to Active Set on F2) *(Starts transmitting on Forward Traffic Channel on F2)*
(Continued on next page)		*(Continued on next page)*

Figure B-13. Call Flow for Inter-Frequency Handoff (Periodic Search Using Candidate Frequency Search Control Message) (Part 2 of 3)

Mobile Station				Base Station
(Continued from previous page)				*(Continued from previous page)*
• Receives *General Handoff Direction Message.* Disables periodic search timer. Saves current configuration. Discontinues use of serving Active Set. • Tunes to F2. Attempts to hand off to target Active Set. *(Handoff attempt succeeds)*	<	Forward Traffic Channel on F1	<	• Sends *General Handoff Direction Message* (RETURN_IF_HO_FAIL = '1'; Target Frequency = F2). *(Maintains Forward and Reverse Traffic Channels on F1)*
(Starts transmitting on Reverse Traffic Channel on F2)				*(Starts receiving on Reverse Traffic Channel on F2)*
• Sends *Handoff Completion Message.*	>	Reverse Traffic Channel on F2	>	• Receives *Handoff Completion Message.* *(Discontinues use of Active Set on F1)*
(Continues communication on F2)				*(Continues communication on F2)*

Figure B-13. Call Flow for Inter-Frequency Handoff (Periodic Search Using Candidate Frequency Search Control Message) (Part 3 of 3)

Mobile Station				Base Station
(Serving Frequency = F1)				*(Serving Frequency = F1)*
• Receives *Candidate Frequency Search Request Message.*	<	Forward Traffic Channel on F1	<	• Sends *Candidate Frequency Search Request Message* (non-empty Search Set; Candidate Frequency = F2).
• Computes search time for Candidate Frequency Search Set.				
Sends *Candidate Frequency Search Response Message.*	>	Reverse Traffic Channel on F1	>	• Receives *Candidate Frequency Search Response Message.*
				(Decides to hand off mobile station to Active Set on F2)
				(Starts transmitting on Forward Traffic Channel on F2)
• Receives *General Handoff Direction Message.* Saves current configuration. Discontinues use of serving Active Set.	<	Forward Traffic Channel on F1	<	• Sends *General Handoff Direction Message* (target Active Set; RETURN_IF_HO_FAIL = ‘1’; PERIODIC_SEARCH = ‘0’; Target Frequency = F2).
				(Maintains Forward and Reverse Traffic Channels on F1)
• Tunes to F2. Attempts to hand off to target Active Set.				
(Handoff attempt fails)				
• Searches pilots in Candidate Frequency Search Set.				
(Continued on next page)				*(Continued on next page)*

Figure B-14. Call Flow for Inter-Frequency Handoff (Single Search Using General Handoff Direction Message) (Part 1 of 3)

Mobile Station				Base Station
(Continued from previous page)				*(Continued from previous page)*
• Re-tunes to F1. Restores old configuration. Resumes use of serving Active Set.				
• Sends *Candidate Frequency Search Report Message* reporting pilots in target Active Set and pilots in Candidate Frequency Search Set above CF_T_ADD.	>	Reverse Traffic Channel on F1	>	• Receives *Candidate Frequency Search Report Message.* *(Discontinues use of Active Set on F2)*
(Continues communication on F1)				*(Continues communication on F1)* *(Decides to hand off mobile station to new Active Set on F2)* *(Starts transmitting on Forward Traffic Channel on F2)*
• Saves current configuration. Discontinues use of serving Active Set.	<	Forward Traffic Channel on F1	<	• Sends *General Handoff Direction Message* (new target Active Set; RETURN_IF_HO_FAIL = '1'; Target Frequency = F2). *(Maintains Forward and Reverse Traffic Channels on F1)*
• Tunes to F2. Attempts to hand off to target Active Set. *(Handoff attempt succeeds)*				
(Continued on next page)				*(Continued on next page)*

Figure B-14. Call Flow for Inter-Frequency Handoff (Single Search Using General Handoff Direction Message) (Part 2 of 3)

Mobile Station				Base Station
(Continued from previous page)				*(Continued from previous page)*
(Starts transmitting on Reverse Traffic Channel on F2)				*(Starts receiving on Reverse Traffic Channel on F2)*
• Sends *Handoff Completion Message.*	>	Reverse Traffic Channel on F2	>	• Receives *Handoff Completion Message.*
				(Discontinues use of Active Set on F1)
(Continues communication on F2)				*(Continues communication on F2)*

Figure B-14. Call Flow for Inter-Frequency Handoff (Single Search Using General Handoff Direction Message) (Part 3 of 3)

Mobile Station				Base Station
(Serving Frequency = F1)				*(Serving Frequency = F1)*
• Receives *Candidate Frequency Search Request Message.*	<	Forward Traffic Channel on F1	<	• Sends *Candidate Frequency Search Request Message* (non-empty Search Set; Candidate Frequency = F2).
• Computes search time for Candidate Frequency Search Set.				
Sends *Candidate Frequency Search Response Message.*	>	Reverse Traffic Channel on F1	>	• Receives *Candidate Frequency Search Response Message.* *(Decides to hand off mobile station to Active Set on F2)* *(Starts transmitting on Forward Traffic Channel on F2)*
• Receives *General Handoff Direction Message.* Saves current configuration. Discontinues use of serving Active Set.	<	Forward Traffic Channel on F1	<	• Sends *General Handoff Direction Message* (target Active Set; RETURN_IF_HO_FAIL = '1'; PERIODIC_SEARCH = '1'; Target Frequency = F2). *(Maintains Forward and Reverse Traffic Channels on F1)*
• Tunes to F2. Attempts to hand off to target Active Set.				
(Handoff attempt fails)				
• Searches pilots in Candidate Frequency Search Set.				
• Re-tunes to F1. Restores old configuration. Resumes use of serving Active Set.				
(Continued on next page)				*(Continued on next page)*

Figure B-15. Call Flow for Inter-Frequency Handoff (Periodic Search Using General Handoff Direction Message) (Part 1 of 4)

Mobile Station		Base Station
(Continued from previous page)		*(Continued from previous page)*
• Sends *Candidate Frequency Search Report Message* reporting pilots in target Active Set and pilots in Candidate Frequency Search Set above CF_T_ADD. • Initializes and enables periodic search timer.	> Reverse Traffic Channel on F1 >	• *Receives Candidate Frequency Search Report Message.* *(Discontinues use of Active Set on F2)*
(Continues communication on F1) *(Periodic search timer running)*		*(Continues communication on F1)*
• Performs a search of Candidate Frequency Search Set by executing the following actions before periodic search timer expires: – Saves current configuration. Discontinues use of serving Active Set. – Tunes to F2. – Searches pilots in Candidate Frequency Search Set. – Re-tunes to F1. Restores old configuration. Resumes use of serving Active Set.		
(Continued on next page)		*(Continued on next page)*

Figure B-15. Call Flow for Inter-Frequency Handoff (Periodic Search Using General Handoff Direction Message) (Part 2 of 4)

Mobile Station		Base Station
(Continued from previous page)		*(Continued from previous page)*
– Sends *Candidate Frequency Search Report Message* reporting pilots in Candidate Frequency Search Set above CF_T_ADD.	> Reverse Traffic Channel on F1 >	• Receives *Candidate Frequency Search Report Message.*
(Continues communication on F1)		*(Continues communication on F1)*
(Periodic search timer expires) • Initializes and enables periodic search timer.		
(Continues periodic search on F2 by repeating the search described above, once every search period)		
		(Decides to hand off mobile station to new Active Set on F2) *(Starts transmitting on Forward Traffic Channel on F2)*
• Receives *General Handoff Direction Message.* Disables periodic search timer. Saves current configuration. Discontinues use of serving Active Set. • Tunes to F2. Attempts to hand off to target Active Set.	< Forward Traffic Channel on F1 <	• Sends *General Handoff Direction Message* (new target Active Set; RETURN_IF_HO_FAIL = '1'; Target Frequency = F2). *(Maintains Forward and Reverse Traffic Channels on F1)*
(Continued on next page)		*(Continued on next page)*

Figure B-15. Call Flow for Inter-Frequency Handoff (Periodic Search Using General Handoff Direction Message) (Part 3 of 4)

Mobile Station				Base Station
(Continued from previous page)				*(Continued from previous page)*
(Handoff attempt succeeds)				
(Starts transmitting on Reverse Traffic Channel on F2)				*(Starts receiving on Reverse Traffic Channel on F2)*
• Sends *Handoff Completion Message.*	>	Reverse Traffic Channel on F2	>	• *Receives Handoff Completion Message.*
				(Discontinues use of Active Set on F1)
(Continues communication on F2)				*(Continues communication on F2)*

Figure B-15. Call Flow for Inter-Frequency Handoff (Periodic Search Using General Handoff Direction Message) (Part 4 of 4)

Mobile Station				Base Station
(Serving Frequency = F1)				*(Serving Frequency = F1)*
• Receives *Candidate Frequency Search Request Message.*	<	Forward Traffic Channel on F1	<	• Sends *Candidate Frequency Search Request Message* (non-empty Search Set; Candidate Frequency = F2).
• Computes search time for Candidate Frequency Search Set.				
Sends *Candidate Frequency Search Response Message.*	>	Reverse Traffic Channel on F1	>	• Receives *Candidate Frequency Search Response Message.*
				(Decides to initiate periodic search)
• Receives *Candidate Frequency Search Control Message.* Initializes and enables periodic search timer.	<	Forward Traffic Channel on F1	<	• Sends *Candidate Frequency Search Control Message* (start periodic search; Candidate Frequency = F2).
.				
.				
(Performs periodic search on F2)				
.				*(Decides to hand off mobile station to Active Set on F3)*
.				*(Starts transmitting on Forward Traffic Channel on F3)*
(Continued on next page)				*(Continued on next page)*

Figure B-16. Call Flow for Periodic Search on F2 from F1, Failed Handoff Attempt to F3, Continued Periodic Search of F2 from F1 (Part 1 of 3)

Mobile Station		Base Station
(Continued from previous page)		*(Continued from previous page)*
• Receives *General Handoff Direction Message*. Disables periodic search timer. Saves current configuration. Discontinues use of serving Active Set.	< Forward Traffic Channel on F1 <	• Sends *General Handoff Direction Message* (target Active Set; RETURN_IF_HO_FAIL = '1'; PERIODIC_SEARCH = '1'; Target Frequency = F3). *(Maintains Forward and Reverse Traffic Channels on F1)*
• Tunes to F3. Attempts to hand off to target Active Set.		
(Handoff attempt fails) • Re-tunes to F1. Restores old configuration. Resumes use of serving Active Set. Initializes and enables periodic search timer.		
(Continued on next page)		*(Continued on next page)*

Figure B-16. Call Flow for Periodic Search on F2 from F1, Failed Handoff Attempt to F3, Continued Periodic Search of F2 from F1 (Part 2 of 3)

Mobile Station				Base Station
(Continued from previous page)				*(Continued from previous page)*
• Sends *Candidate Frequency Search Report Message* reporting pilots in target Active Set.	>	Reverse Traffic Channel on F1	>	• Receives *Candidate Frequency Search Report Message.* *(Discontinues use of Active Set on F3)*
(Continues communication on F1) . . *(Performs periodic search on F2)* . . *(Continues communication on F1)*				*(Continues communication on F1)*

Figure B-16. Call Flow for Periodic Search on F2 from F1, Failed Handoff Attempt to F3, Continued Periodic Search of F2 from F1 (Part 3 of 3)

Mobile Station				Base Station
(Serving Frequency = F1)				*(Serving Frequency = F1)*
• Receives *Candidate Frequency Search Request Message.*	<	Forward Traffic Channel on F1	<	• Sends *Candidate Frequency Search Request Message* (non-empty Search Set; Candidate Frequency = F2).
• Computes search time for Candidate Frequency Search Set.				
Sends *Candidate Frequency Search Response Message.*	>	Reverse Traffic Channel on F1	>	• Receives *Candidate Frequency Search Response Message.*
				(Decides to initiate periodic search)
• Receives *Candidate Frequency Search Control Message.* Initializes and enables periodic search timer.	<	Forward Traffic Channel on F1	<	• Sends *Candidate Frequency Search Control Message* (start periodic search; Candidate Frequency = F2).
. .				
(Performs periodic search on F2)				
. . .				*(Decides to hand off mobile station to Active Set on F3)*
				(Starts transmitting on Forward Traffic Channel on F3)
• Receives *General Handoff Direction Message.* Disables periodic search timer. Saves current configuration. Discontinues use of serving Active Set.	<	Forward Traffic Channel on F1	<	• Sends *General Handoff Direction Message* (target Active Set; RETURN_IF_HO_FAIL = '1'; PERIODIC_SEARCH = '1'; Target Frequency = F3).
				(Maintains Forward and Reverse Traffic Channels on F1)
(Continued on next page)				*(Continued on next page)*

Figure B-17. Call Flow for Periodic Search on F2 from F1, Successful Handoff to F3, Continued Periodic Search on F2 from F3 (Part 1 of 2)

Mobile Station				Base Station
(Continued from previous page)				*(Continued from previous page)*
• Tunes to F3. Attempts to hand off to target Active Set.				
(Handoff attempt succeeds)				
(Starts transmitting on Reverse Traffic Channel on F3)				*(Starts receiving on Reverse Traffic Channel on F3)*
• Sends *Handoff Completion Message.* Initializes and enables periodic search timer.	>	Reverse Traffic Channel on F3	>	• Receives *Handoff Completion Message.* *(Discontinues use of Active Set on F1)*
(Continues communication on F3)				*(Continues communication on F3)*
.				
.				
(Performs periodic search on F2)				
.				
.				
(Continues communication on F3)				

Figure B-17. Call Flow for Periodic Search on F2 from F1, Successful Handoff to F3, Continued Periodic Search on F2 from F3 (Part 2 of 2)

Mobile Station				Base Station
• Packet arrives.				
• Sends *Origination Message* with “High Speed Packet Service Option.”	>	Access Channel	>	• Sets up Traffic Channel.
				• Begins sending null Traffic Channel data.
• Sets up Traffic Channel.	<	Paging Channel	<	• Sends *Channel Assignment Message* (GRANTED_MODE = ‘01’).
• Receives N_{5m} consecutive valid frames.				
• Begins sending the Traffic Channel preamble.				• Acquires the Reverse Traffic Channel.
• Begins transmitting null Traffic Channel data.	<	Forward Traffic Channel	<	• Sends *Base Station Acknowledgment Order.*
• Sends *Service Request Message* (FOR_MUX_OPTION and REV_MUX_OPTION indicates max number of Supplemental Code Channels).	>	Reverse Traffic Channel	>	
• Begins processing primary traffic in accordance with Service Option n.	<	Forward Traffic Channel	<	• Sends *Service Connect Message*.
• Sends *Service Connect Completion Message.*	>	Reverse Traffic Channel	>	
• Sends packet.	>	Reverse Fundamental Channel	>	
	<	Forward Fundamental Channel	<	• Sends packet.
(Continued on next page)				*(Continued on next page)*

Figure B-18. Simple Call Flow Mobile Station Origination Example with Transmission on Forward Supplemental Code Channels (Part 1 of 2)

Mobile Station		Base Station
(Continued from previous page)		*(Continued from previous page)*
		• Base station decides that it requires to change the number of Supplemental Channels (e.g., it has a "large" packet to send).
	< Forward Fundamental Channel <	• Send *Supplemental Channel Assignment Message.*
	< Forward Fundamental and Supplemental Code Channels <	• Begin transmitting on the Supplemental Code Channels for the duration specified in *Supplemental Channel Assignment Message.*
(User traffic)		*(User traffic)*

Figure B-18. Simple Call Flow Mobile Station Origination Example with Transmission on Forward Supplemental Code Channels (Part 2 of 2)

Mobile Station				Base Station
• Packet arrives.				
• Sends *Origination Message* with “High Speed Packet Service Option.”	>	Access Channel	>	• Sets up Traffic Channel.
				• Begins sending null Traffic Channel data.
• Sets up Traffic Channel.	<	Paging Channel	<	• Sends *Channel Assignment Message* (GRANTED_MODE = ‘01’).
• Receives N_{5m} consecutive valid frames.				
• Begins sending the Traffic Channel preamble.				• Acquires the Reverse Traffic Channel.
• Begins transmitting null Traffic Channel data.	<	Forward Traffic Channel	<	• Sends *Base Station Acknowledgment Order.*
• Sends *Service Request Message* (FOR_MUX_OPTION and REV_MUX_OPTION indicates max number of Supplemental Code Channels).	>	Reverse Traffic Channel	>	
• Begins processing primary traffic in accordance with Service Option n.	<	Forward Traffic Channel	<	• Sends *Service Connect Message.*
• Sends *Service Connect Completion Message.*	>	Reverse Traffic Channel	>	
• Sends packet.	>	Reverse Fundamental Channel	>	
	<	Forward Fundamental Channel	<	• Sends packet.
(Continued on next page)				*(Continued on next page)*

Figure B-19. Simple Call Flow Mobile Station Origination Example with Transmission on Reverse Supplemental Code Channels (Part 1 of 2)

Mobile Station				Base Station
(Continued from previous page)				*(Continued from previous page)*
• Mobile station has a “large” packet to send.				
• Continue transmitting on the Fundamental Channel.	>	Reverse Fundamental Channel	>	
• Sends *Supplemental Channel Request Message*.	>	Reverse Fundamental Channel	>	
	<	Forward Fundamental Channel	<	• Send *Supplemental Channel Assignment Message*.
• Begins transmitting on the Reverse Supplemental Code Channels.	>	Reverse Fundamental & Supplemental Code Channels	>	
(User traffic)				*(User traffic)*

Figure B-19. Simple Call Flow Mobile Station Origination Example with Transmission on Reverse Supplemental Code Channels (Part 2 of 2)

Mobile Station				Base Station
				• Packet arrives.
	<	Paging Channel	<	• Sends *General Page Message* with "High Speed Packet Service Option."
• Sends *Page Response Message.*	>	Access Channel	>	• Sets up Traffic Channel
				• Begins sending null Traffic Channel data.
• Sets up Traffic Channel.	<	Paging Channel	<	• Sends *Extended Channel Assignment Message* (GRANTED_MODE = '00').
• Receives N_{5m} consecutive valid frames.				
• Begins sending the Traffic Channel preamble.				• Acquires the Reverse Fundamental Channel.
• Begins transmitting null Traffic Channel data.	<	Forward Fundamental Channel	<	• Sends *Base Station Acknowledgment Order.*
• Processes *Service Request Message.*	<	Forward Fundamental Channel		• Sends *Service Request Message* (FOR_MUX_OPTION and REV_MUX_OPTION indicates the maximum number of Supplemental Forward and Reverse Code Channels).
(Continued on next page)				*(Continued on next page)*

Figure B-20. Simple Call Flow, Mobile Station Termination Example with Transmission on Forward Supplemental Code Channel(s) (Part 1 of 3)

Mobile Station		Base Station
(Continued from previous page)		*(Continued from previous page)*
• Sends *Service Response Message* to accept Service Option with FOR_MUX_OPTION and REV_MUX_OPTION to indicate the maximum number of Supplemental Forward and Reverse Code Channels supported by the mobile station.	> Reverse Fundamental Channel >	
• Begins processing primary traffic in accordance with Service Option and multiplex option.	< Forward Fundamental Channel <	• Sends *Service Connect Message*.
• Sends *Service Connect Completion Message*.	> Reverse Fundamental Channel >	
• Sends packet, if any, on the Fundamental Channel.	> Reverse Fundamental Channel >	
	< Forward Fundamental Channel <	• Sends packet, if any, on the Fundamental Channel.
(Continued on next page)		*(Continued on next page)*

Figure B-20. Simple Call Flow, Mobile Station Termination Example with Transmission on Forward Supplemental Code Channel(s) (Part 2 of 3)

Mobile Station				Base Station
(Continued from previous page)				*(Continued from previous page)*
				• Base station decides that it requires to use Supplemental Channels to send a “large” packet.
	<	Forward Fundamental Channel	<	• Sends *Supplemental Channel Assignment Message.*
• Begins processing packet data received from Forward Fundamental and Supplemental Code Channel(s).	<	Forward Fundamental & Supplemental Code Channels	<	• Begins transmitting on the Supplemental Code Channel(s) for the duration specified in *Supplemental Channel Assignment Message.*
(User traffic)				*(User traffic)*

Figure B-20. Simple Call Flow, Mobile Station Termination Example with Transmission on Forward Supplemental Code Channel(s) (Part 3 of 3)

Mobile Station		Base Station
		• Packet arrives
	< Paging Channel <	• Sends *General Page Message* with "High Speed Packet Service Option."
• Sends *Page Response Message.*	> Access Channel >	• Sets up Traffic Channel. • Begins sending null Traffic Channel data.
• Sets up Traffic Channel.	< Paging Channel <	• Sends *Extended Channel Assignment Message* (GRANTED_MODE = '00').
• Receives N_{5m} consecutive valid frames. • Begins sending the Traffic Channel preamble.		• Acquires the Reverse Fundamental Channel.
• Begins transmitting null Traffic Channel data.	< Forward Fundamental Channel <	• Sends *Base Station Acknowledgment Order.*
• Processes *Service Request Message.*	< Forward Fundamental Channel <	• Sends *Service Request Message* (FOR_MUX_OPTION and REV_MUX_OPTION proposes the maximum number of Supplemental Forward and Reverse Code Channels to be used).
(Continued on next page)		*(Continued on next page)*

Figure B-21. Simple Call Flow, Mobile Station Termination Example with Transmission on Reverse Supplemental Code Channel(s) (Part 1 of 3)

Mobile Station				Base Station
(Continued from previous page)				*(Continued from previous page)*
• Sends *Service Response Message* to accept Service Option, with FOR_MUX_OPTION and REV_MUX_OPTION to indicate the maximum number of Supplemental Code Channels supported by the mobile station.	>	Reverse Fundamental Channel	>	
• Begins processing primary traffic in accordance with the service configuration.	<	Forward Fundamental Channel	<	• Sends *Service Connect Message* to connect corresponding SO, with FOR_MUX_OPTION and REV_MUX_OPTION to specify the maximum number of Supplemental Code Channel(s) mutually supported.
• Sends *Service Connect Completion Message.*	>	Reverse Fundamental Channel	>	
• Sends packet data.	>	Reverse Fundamental Channel	>	
	<	Forward Fundamental Channel	<	• Sends packet data.
• Mobile station has a “large” packet to send, so begins transmitting packet.	>	Reverse Fundamental Channel	>	
(Continued on next page)				*(Continued on next page)*

Figure B-21. Simple Call Flow, Mobile Station Termination Example with Transmission on Reverse Supplemental Code Channel(s) (Part 2 of 3)

Mobile Station		Base Station
(Continued from previous page)		*(Continued from previous page)*
• Sends *Supplemental Channel Request Message*, and continues transmitting on the Reverse Fundamental Channel.	> Reverse Fundamental Channel >	
	< Forward Fundamental Channel <	• Send *Supplemental Channel Assignment Message.*
• Begins transmitting on the Reverse Supplemental Code Channel(s), in addition to continuing on the Reverse Fundamental Channel.	> Reverse Fundamental and Supplemental Code Channels >	
(User traffic)		*(User traffic)*

Figure B-21. Simple Call Flow, Mobile Station Termination Example with Transmission on Reverse Supplemental Code Channel(s) (Part 3 of 3)

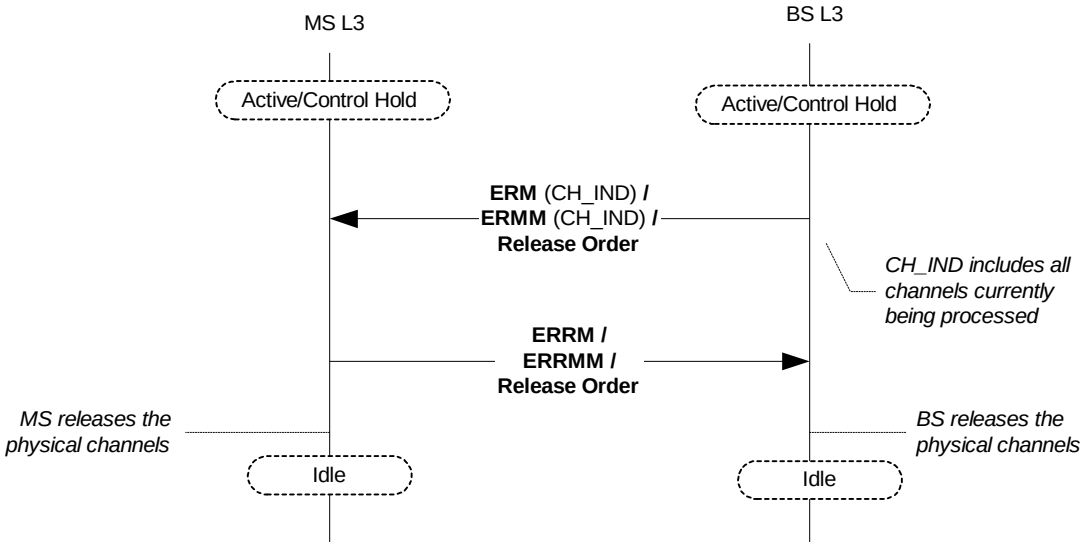

Figure B-22. Active/Control Hold to Idle State Transition; Release all services (BS Initiated)

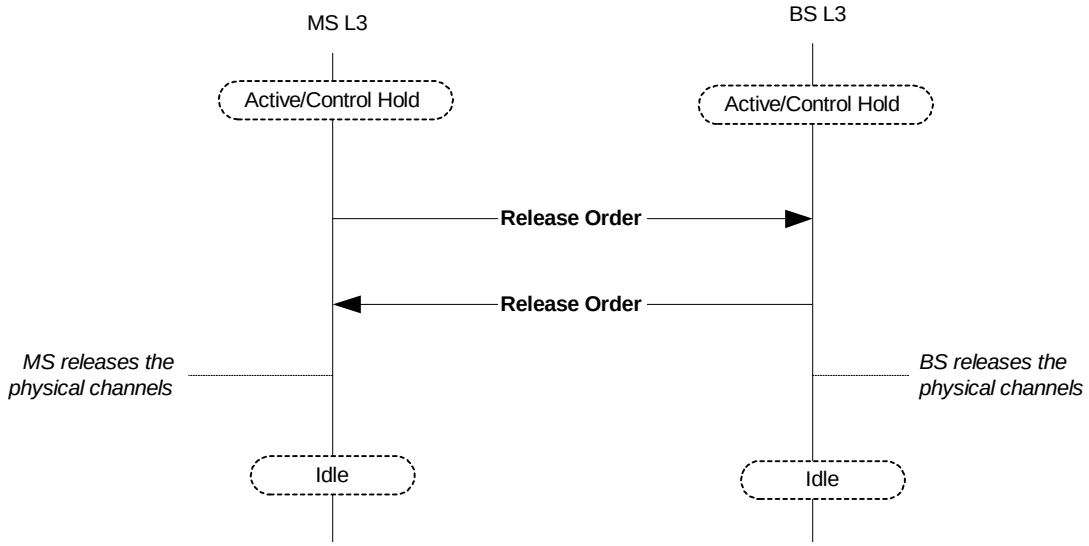

Figure B-23. Active/Control Hold to Idle State Transition; Release all services (MS Initiated)

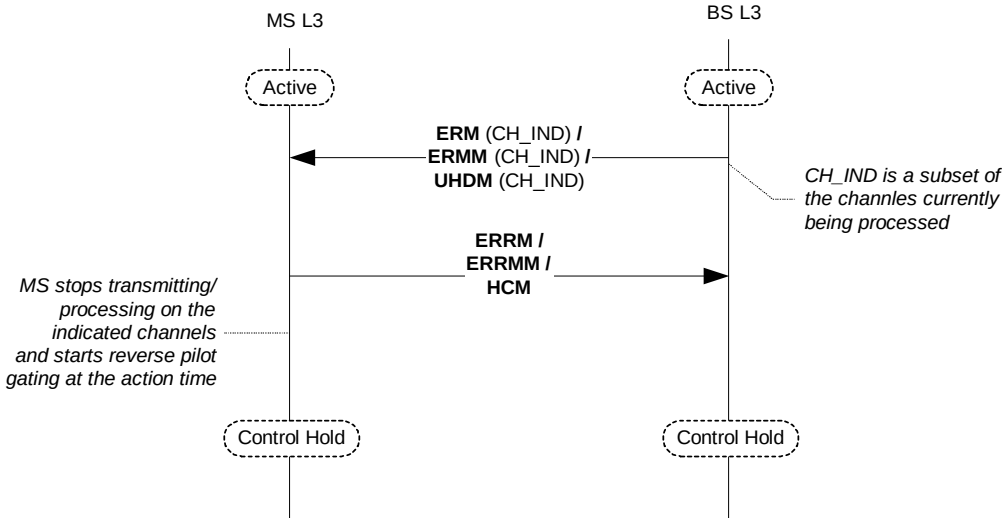

Figure B-24. Active to Control Hold State Transition (BS Initiated)

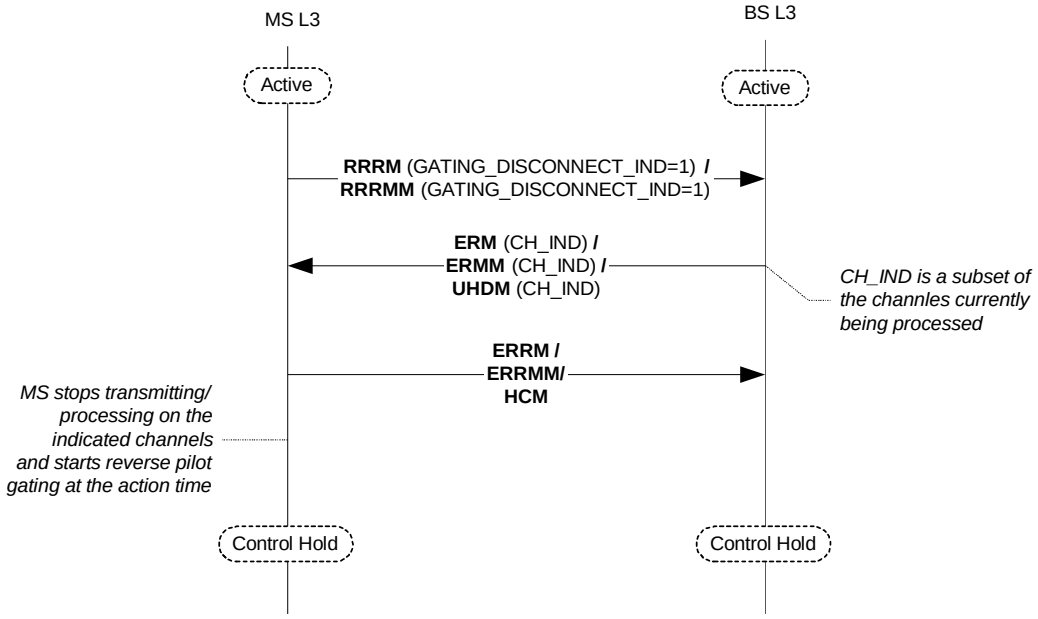

Figure B-25. Active to Control Hold State Transition (MS Initiated)

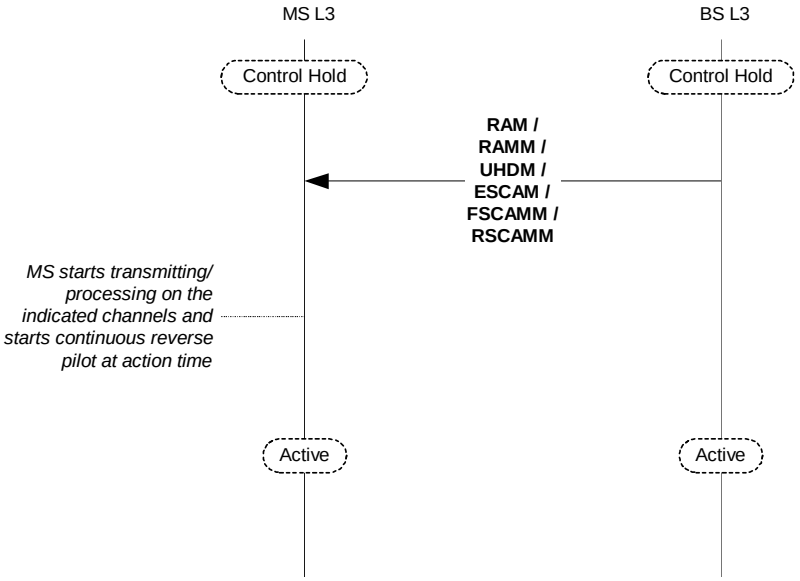

Figure B-26. Control Hold to Active Transition (BS Initiated)

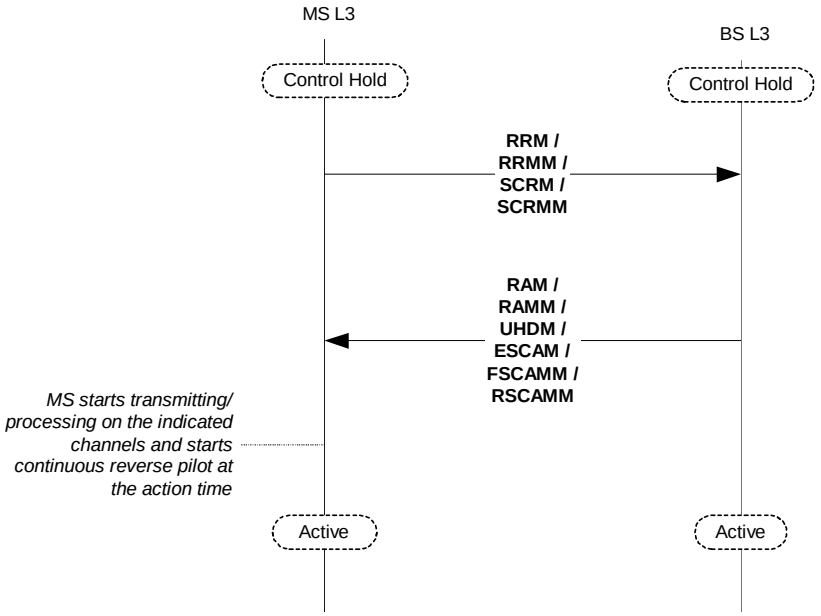

Figure B-27. Control Hold to Active Transition (MS Initiated)

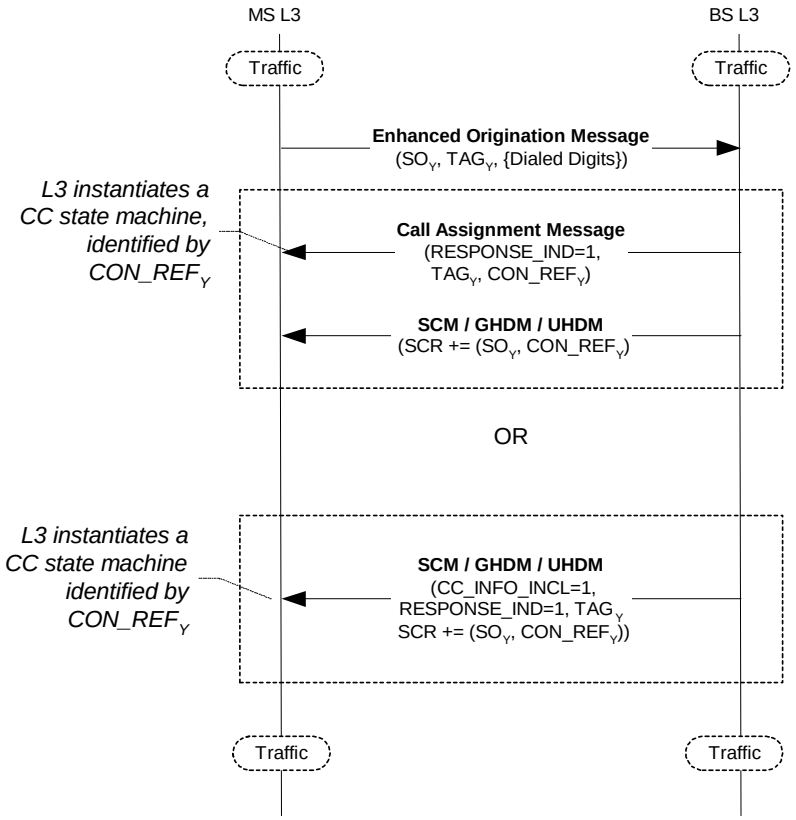

Figure B-28. Connecting an Additional Service (MS Initiated)

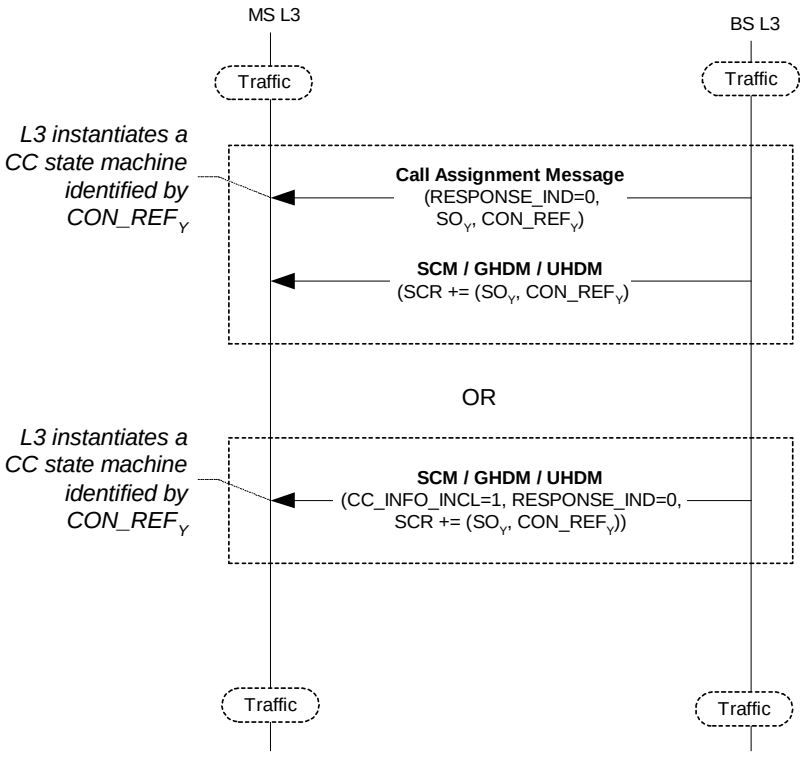

Figure B-29. Connecting an Additional Service (BS Initiated)

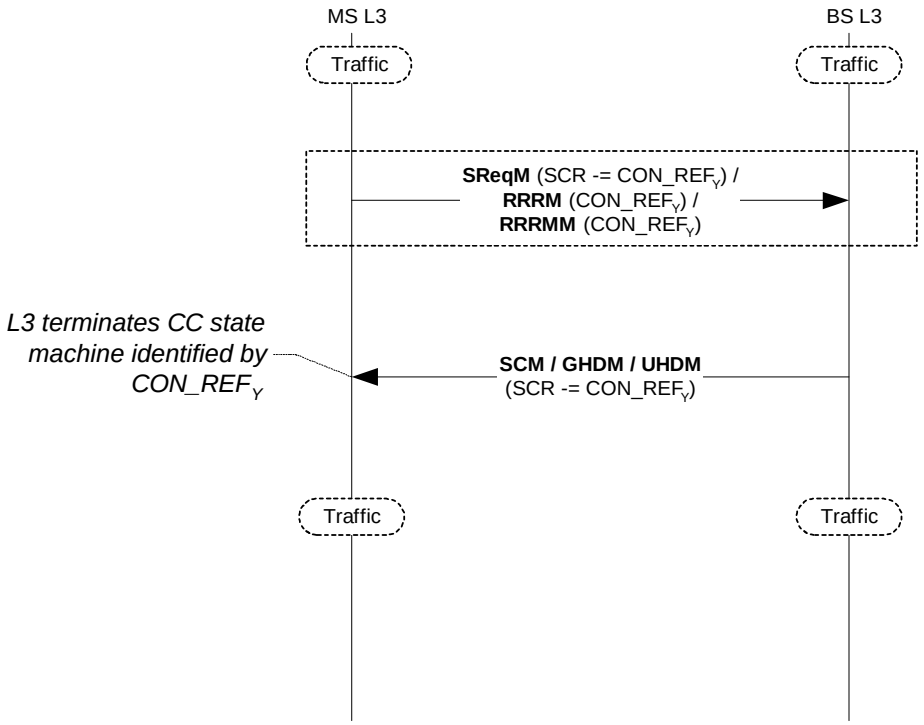

Figure B-30. Releasing a Service that is not the last one connected (MS Initiated)

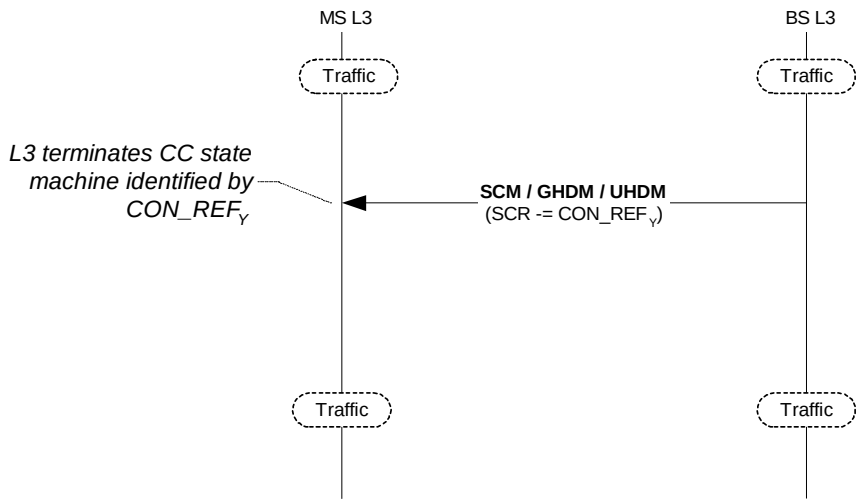

Figure B-31. Releasing a Service that is not the last one connected (BS Initiated)

ANNEX C ADDITONAL CDMA CALL FLOW EXAMPLES

C-1 Regular Call Setup

C-1.1 Call setup with F-PDCH and no F-Fundicated

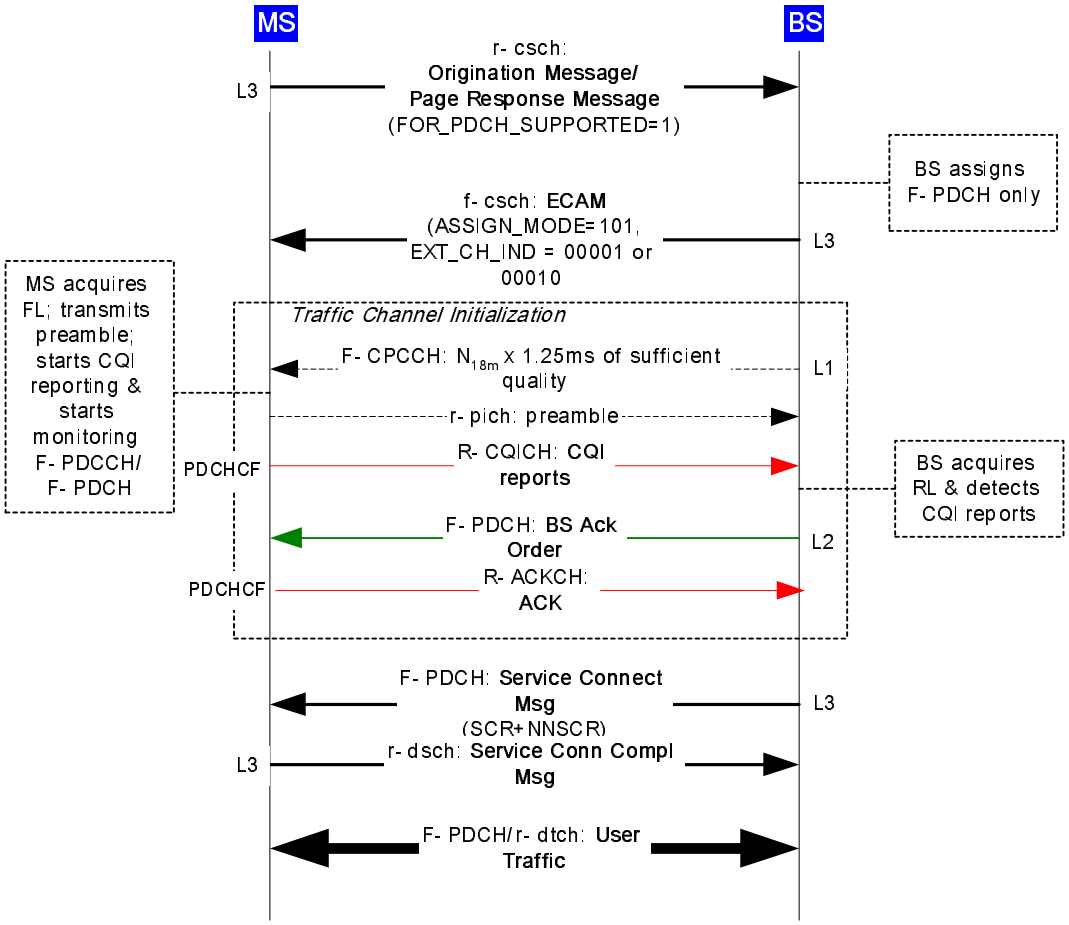

Figure C-1. 1 Call setup with F-PDCH and no F-Fundicated

C-1.2 Call setup with F-PDCH and F-Fundicated

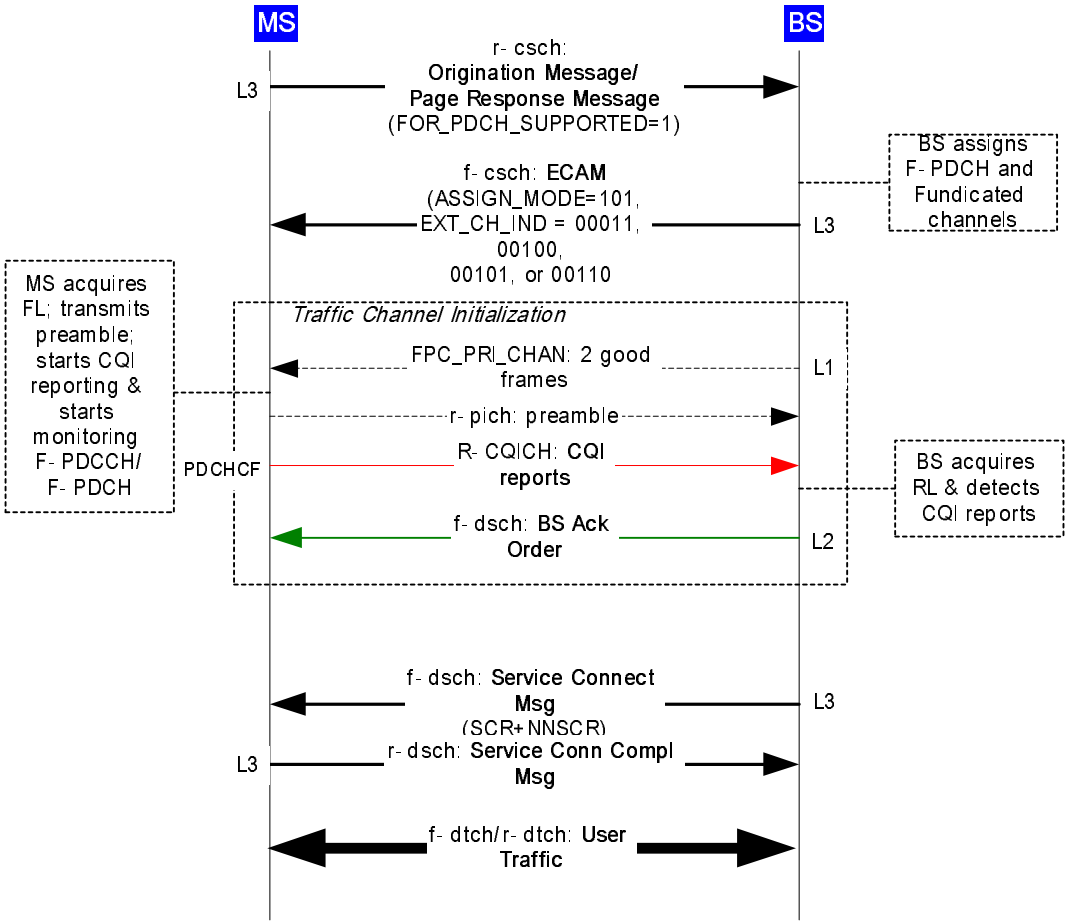

Figure C-1. 2 Call setup with F-PDCH and F-Fundicated

C-1.3 Call setup with F/R-PDCH

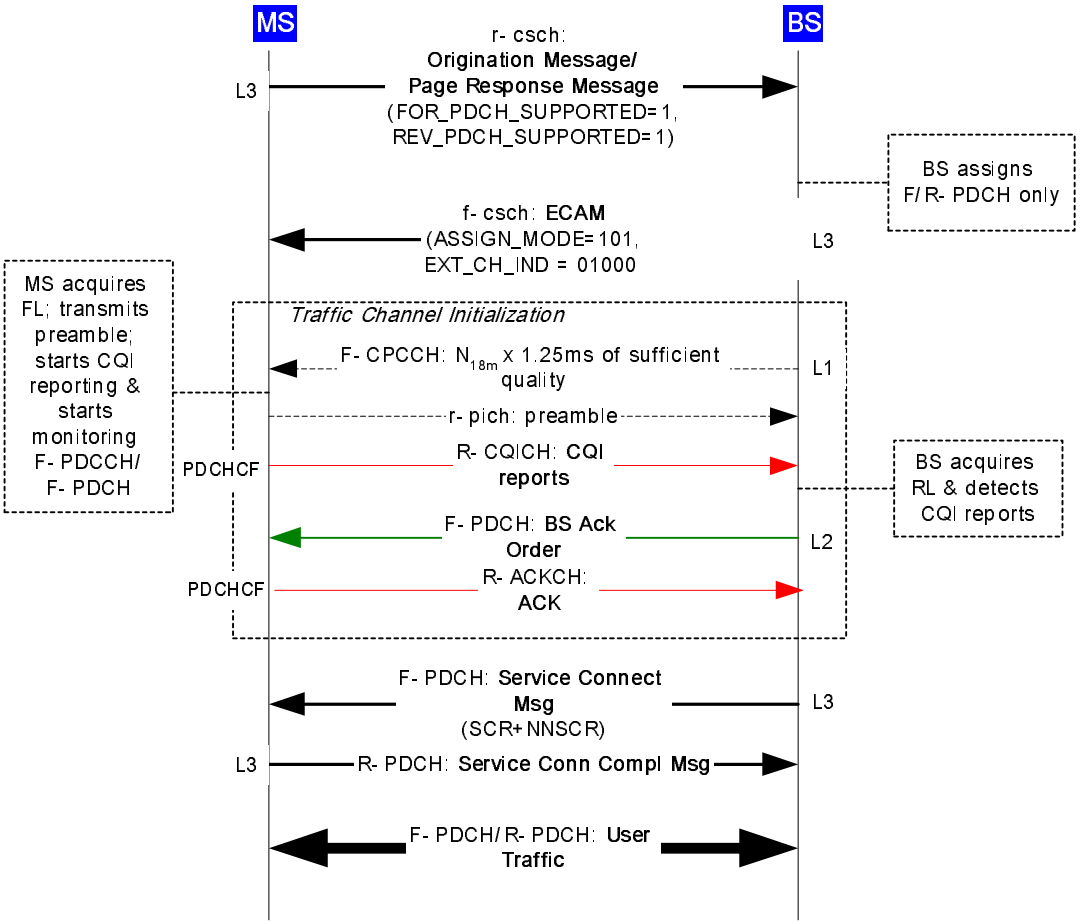

Figure C-1. 3 Call setup with F/R-PDCH

C-2 Fast Call Setup Enhancements

C-2.1 Direct Channel Assignment - Normal setup

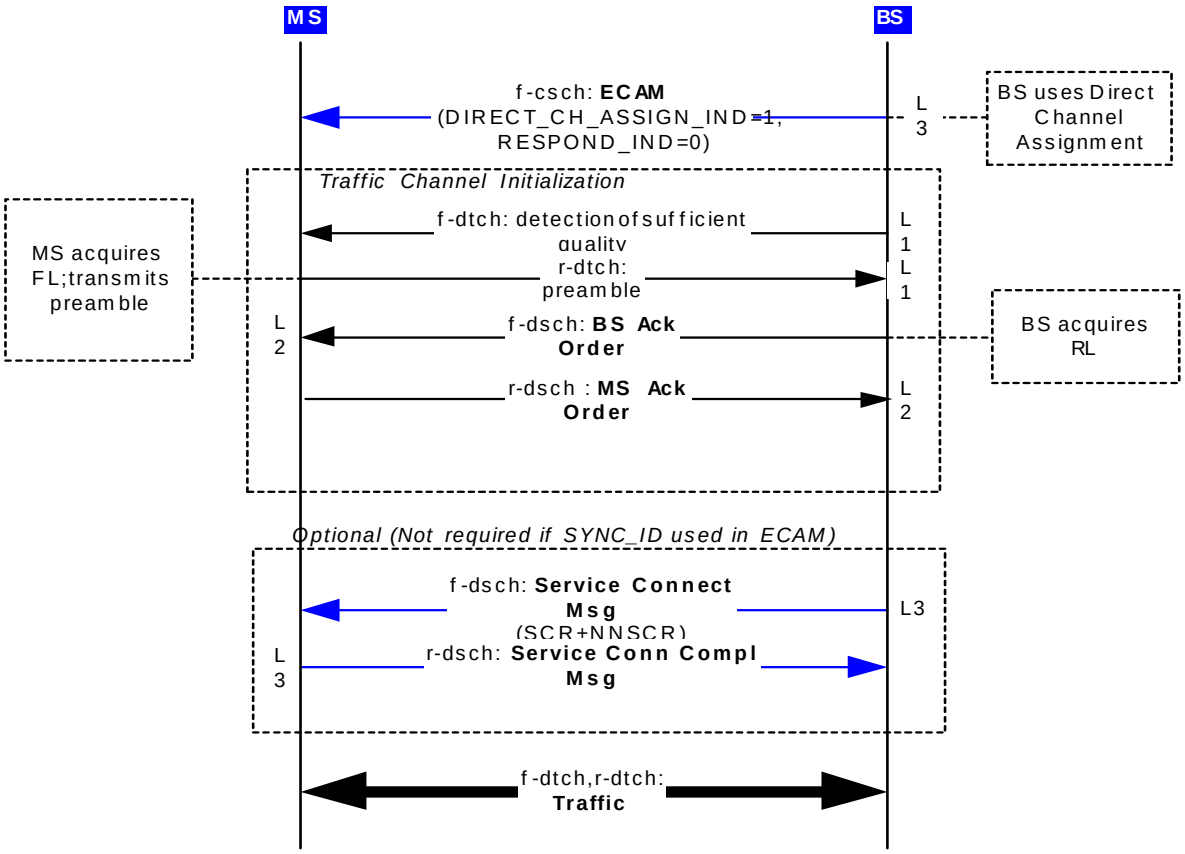

Figure C-2. 1 Direct Channel Assignment - Normal setup

C-2.2 Direct Channel Assignment - With unassured page response

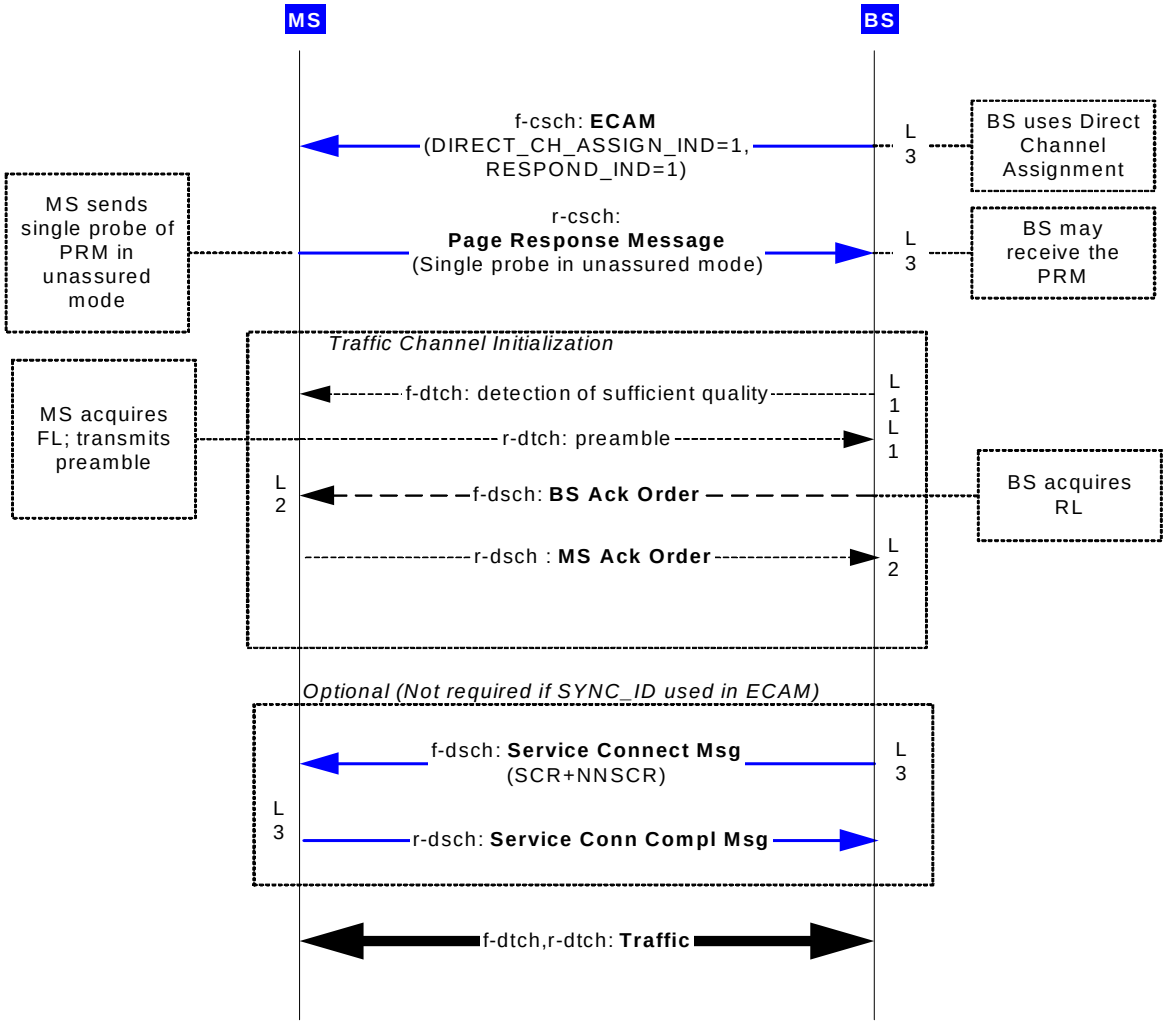

Figure C-2. 2 Direct Channel Assignment - With unassured page response

C-2.3 Direct Channel Assignment - With failure recovery

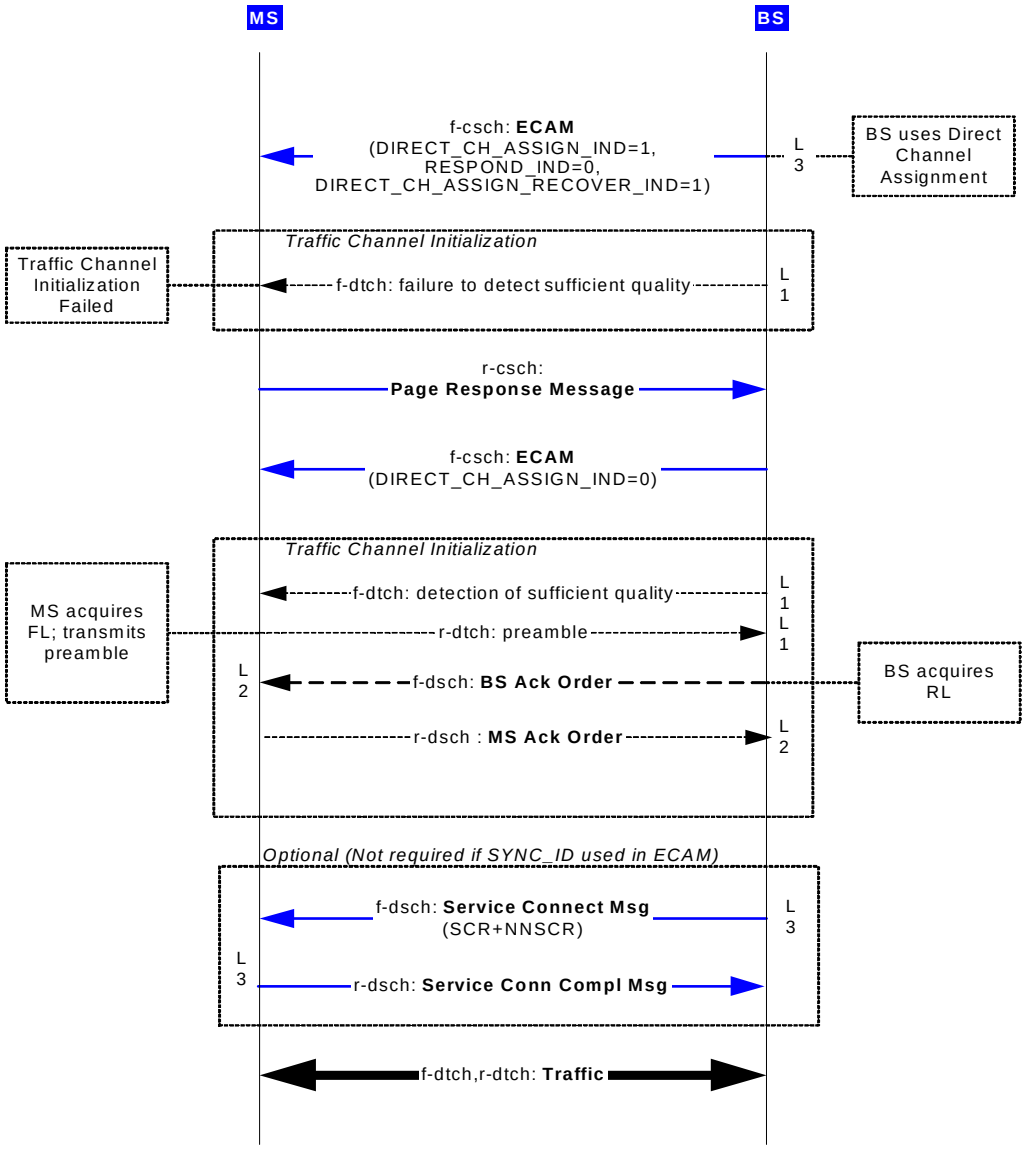

Figure C-2. 3 Direct Channel Assignment - With failure recovery

C-2.4 Radio Environment Reporting Mode Example

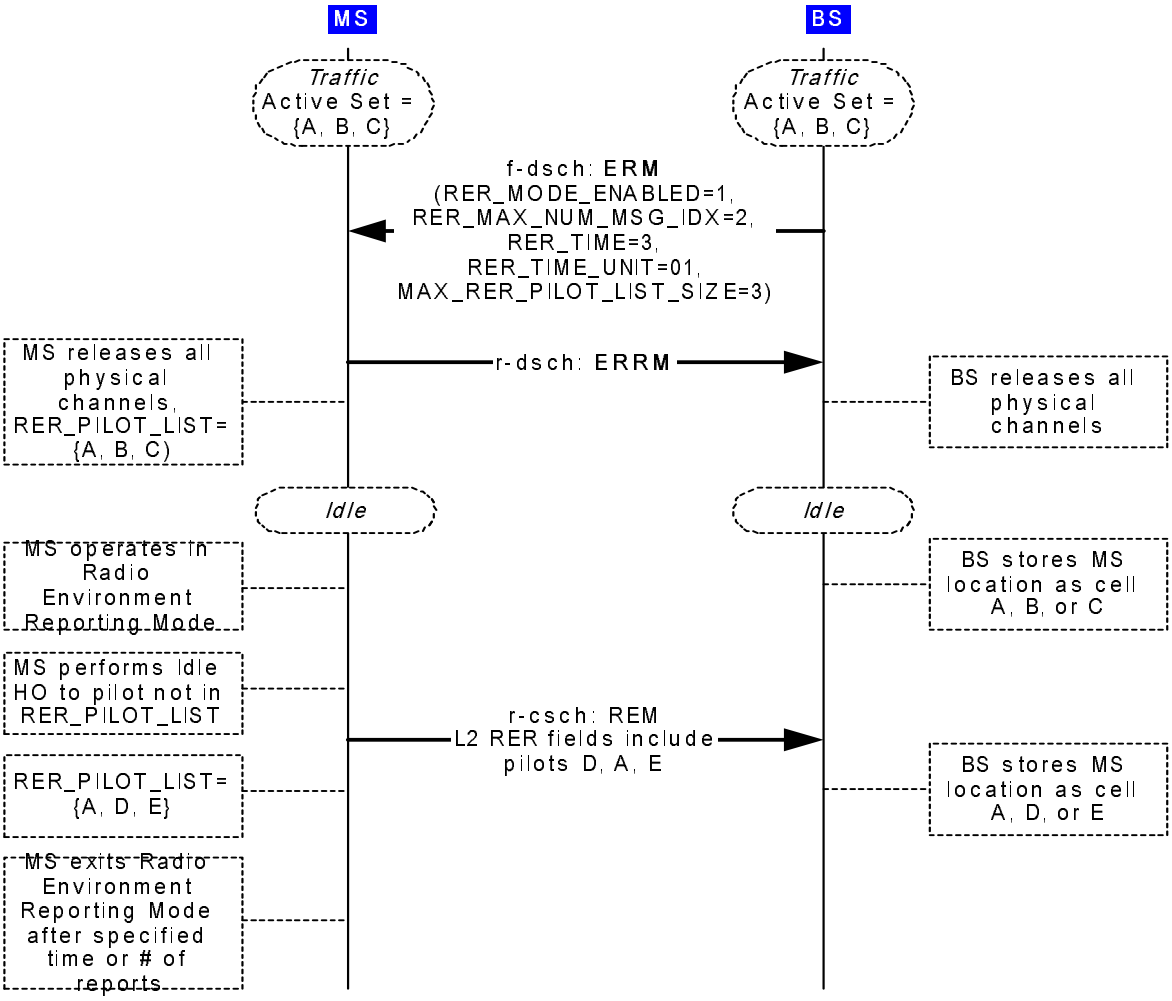

Figure C-2. 4 Radio Environment Reporting Mode Example

C-2.5 Tracking zone reporting example

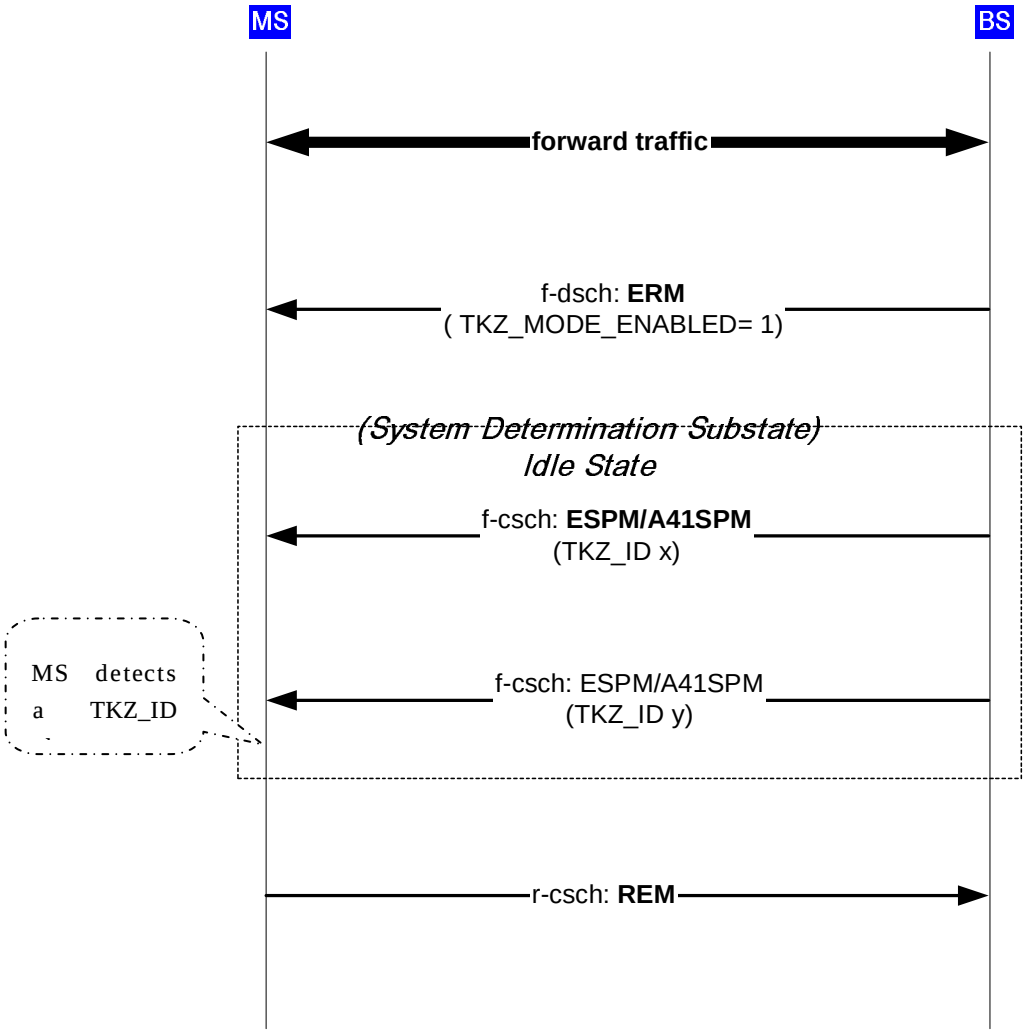

Figure C-2. 5 Tracking zone reporting example

C-2.6 Call setup with bypass two good frames

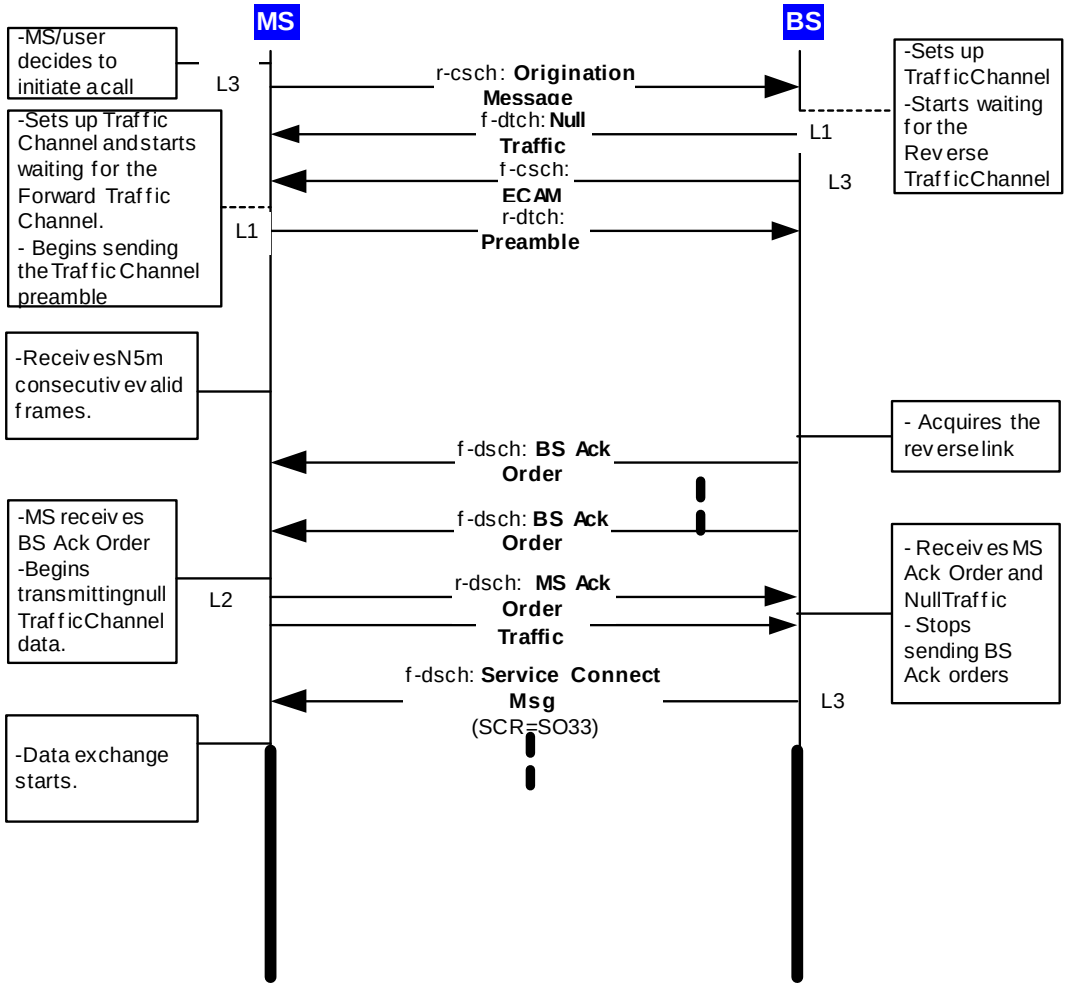

Figure C-2. 6 Call setup with bypass two good frames

C-2.7 Call setup with fixed duration preamble transmission

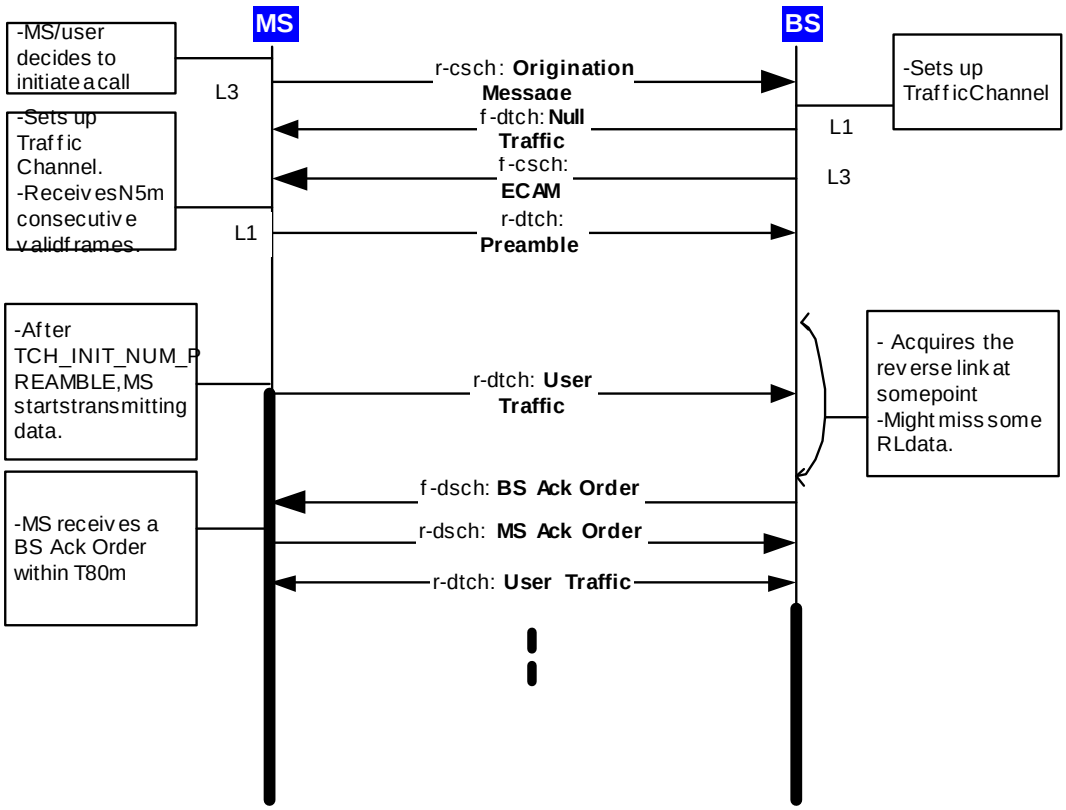

Figure C-2. 7 Call setup with fixed duration preamble transmission

C-2.8 Call setup with bypass two good frames + fixed duration preamble transmission

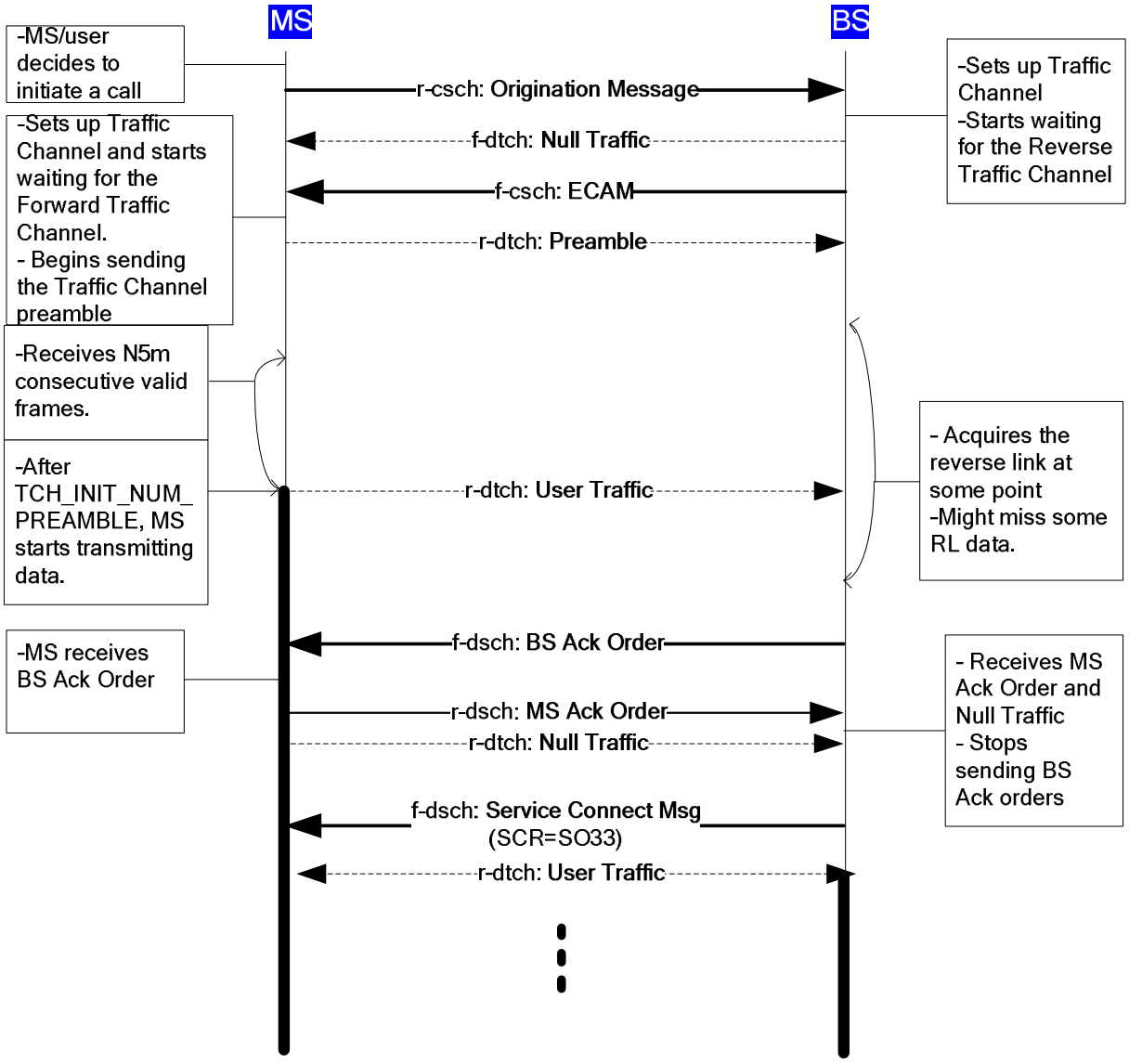

Figure C-2. 8 Call setup with bypass two good frames + fixed duration preamble transmission

C-2.9 Reduced Slot Cycle Mode - MS initiated release; MS request

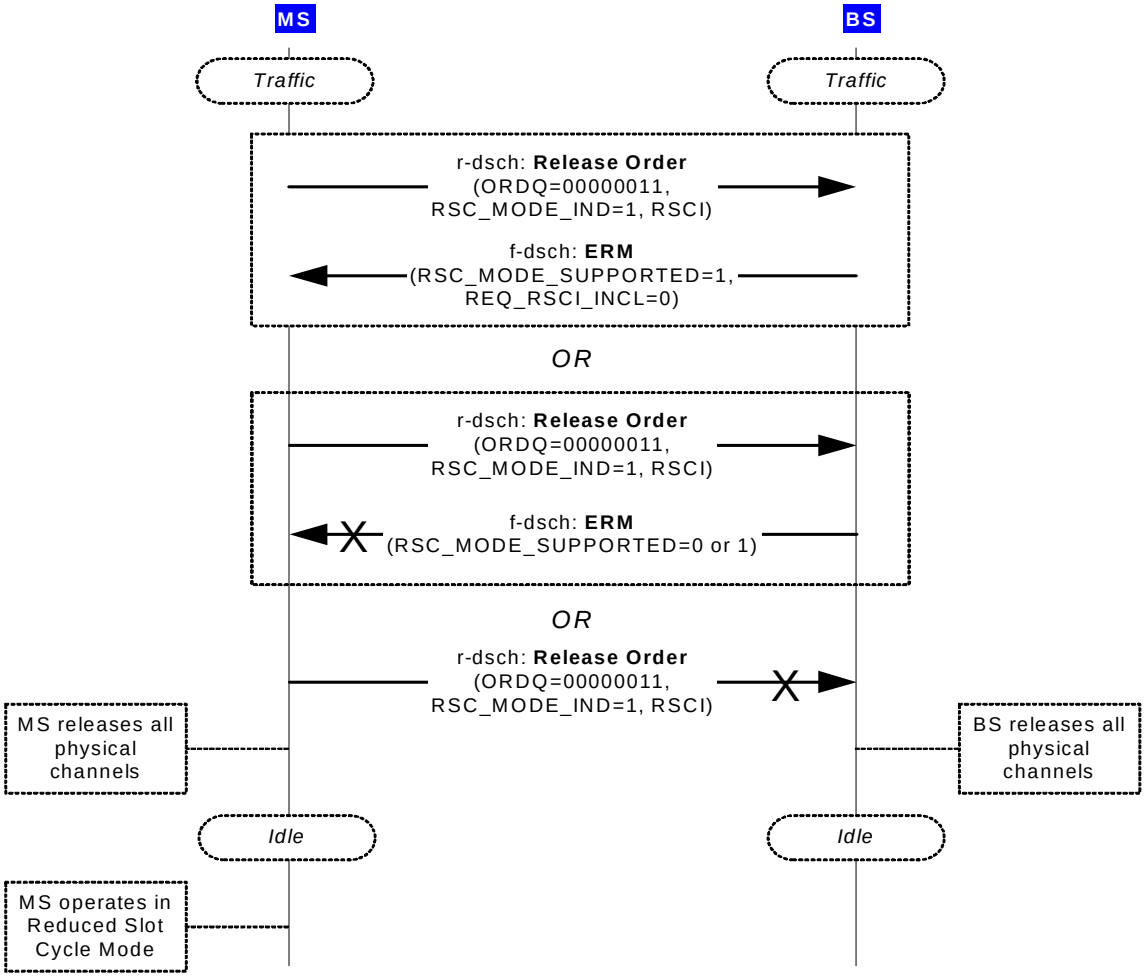

Figure C-2. 9 Reduced Slot Cycle Mode - MS initiated release; MS request

C-2.10 Reduced Slot Cycle Mode - MS initiated release; BS request

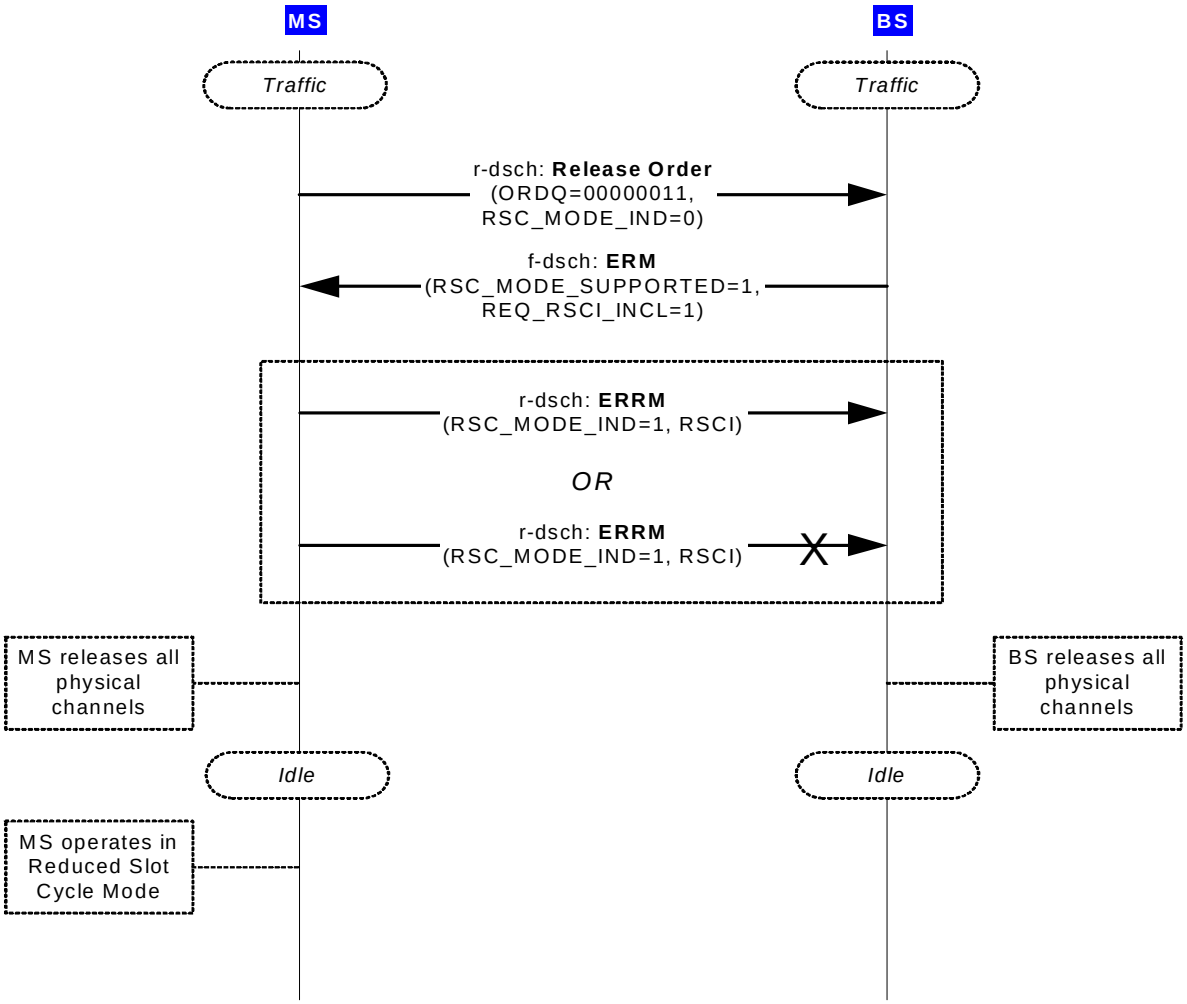

Figure C-2. 10 Reduced Slot Cycle Mode (MS Initiated Release; BS Request)

C-2.11 Reduced Slot Cycle Mode - BS initiated release; BS request

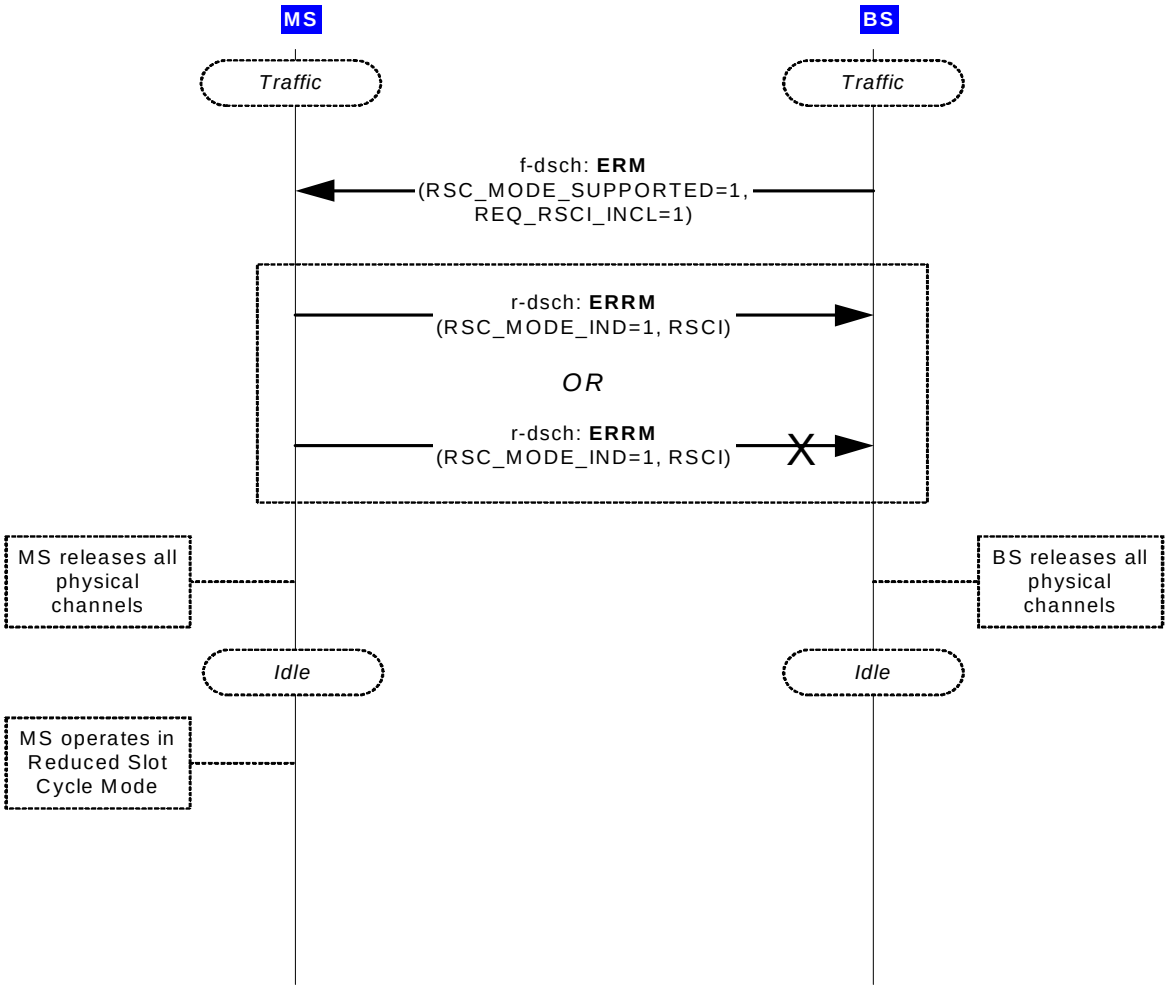

Figure C-2. 11 Reduced Slot Cycle Mode - BS initiated release; BS request

C-2.12 Reduced Slot Cycle Mode - BS initiated release; MS request

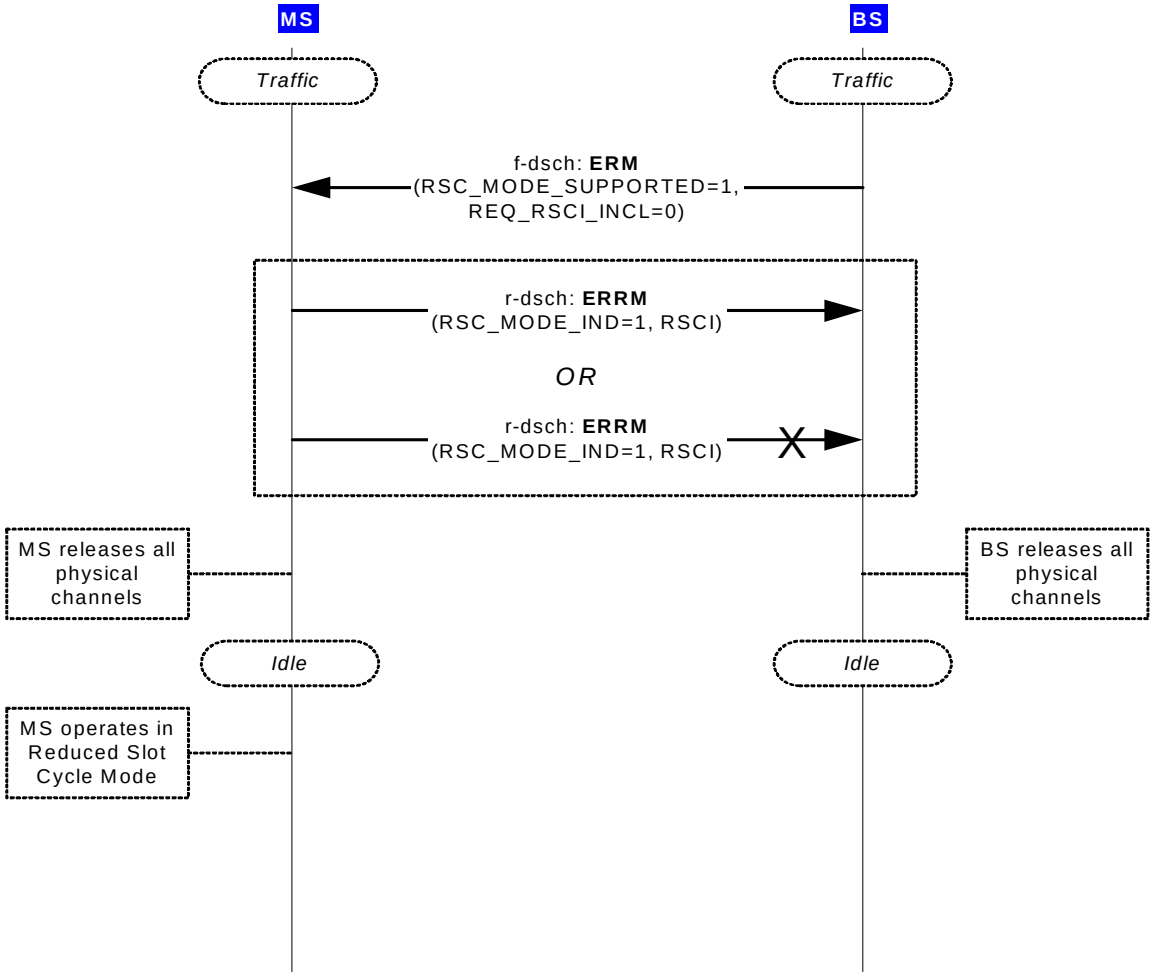

Figure C-2. 12 Reduced Slot Cycle Mode - BS initiated release; MS request

C-2.13 Reduced Slot Cycle Mode - MS initiated in Idle State

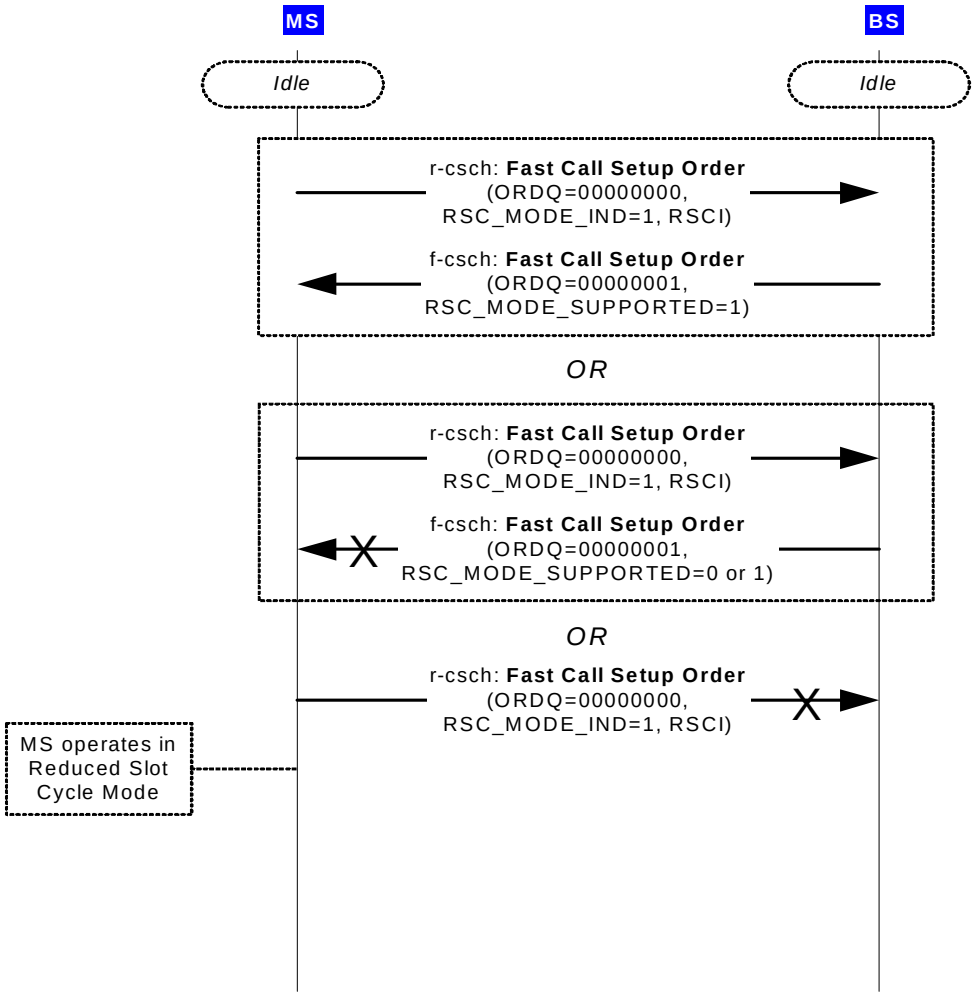

Figure C-2. 13 Reduced Slot Cycle Mode - MS initiated in Idle State

C-2.14 Reduced Slot Cycle Mode - BS initiated in Idle State

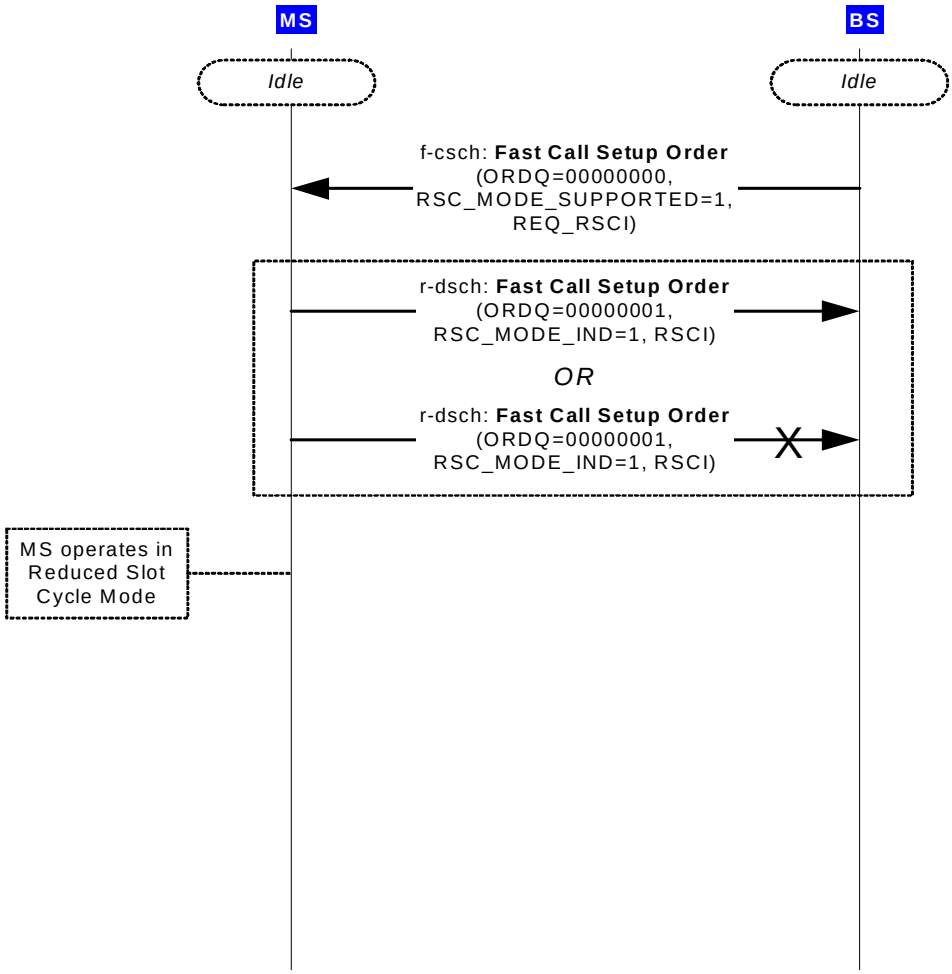

Figure C-2. 14 Reduced Slot Cycle Mode - BS initiated in Idle State

C-2.15 Direct to Idle transition example

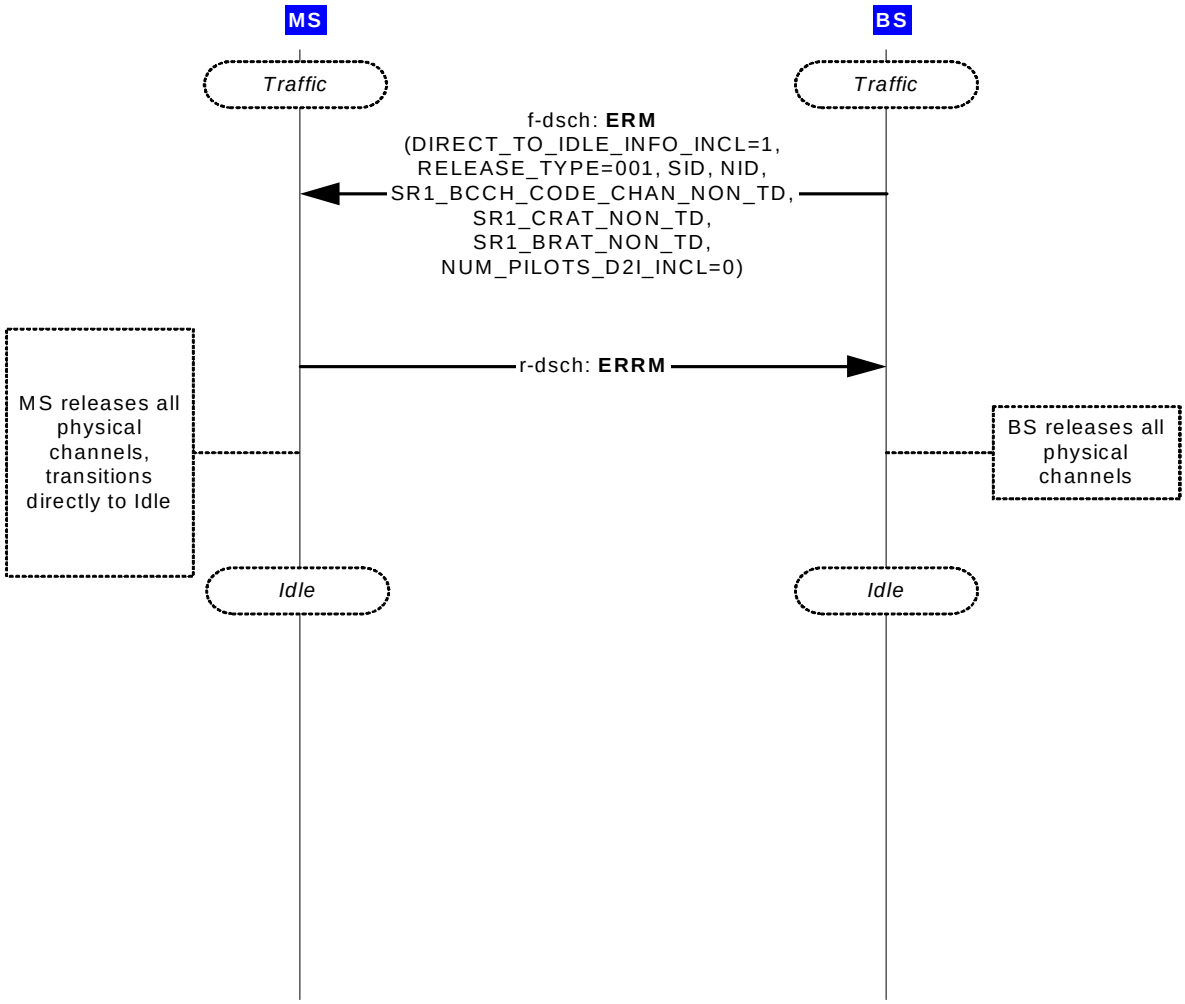

Figure C-2. 15 Direct to Idle Transition Example (BS Initiated Release to BCCH)

C-3 SYNC_ID enhancements

C-3.1 SYNC_ID in Origination/Page Response/Reconnect Message and BS grants it via ECAM or SCM

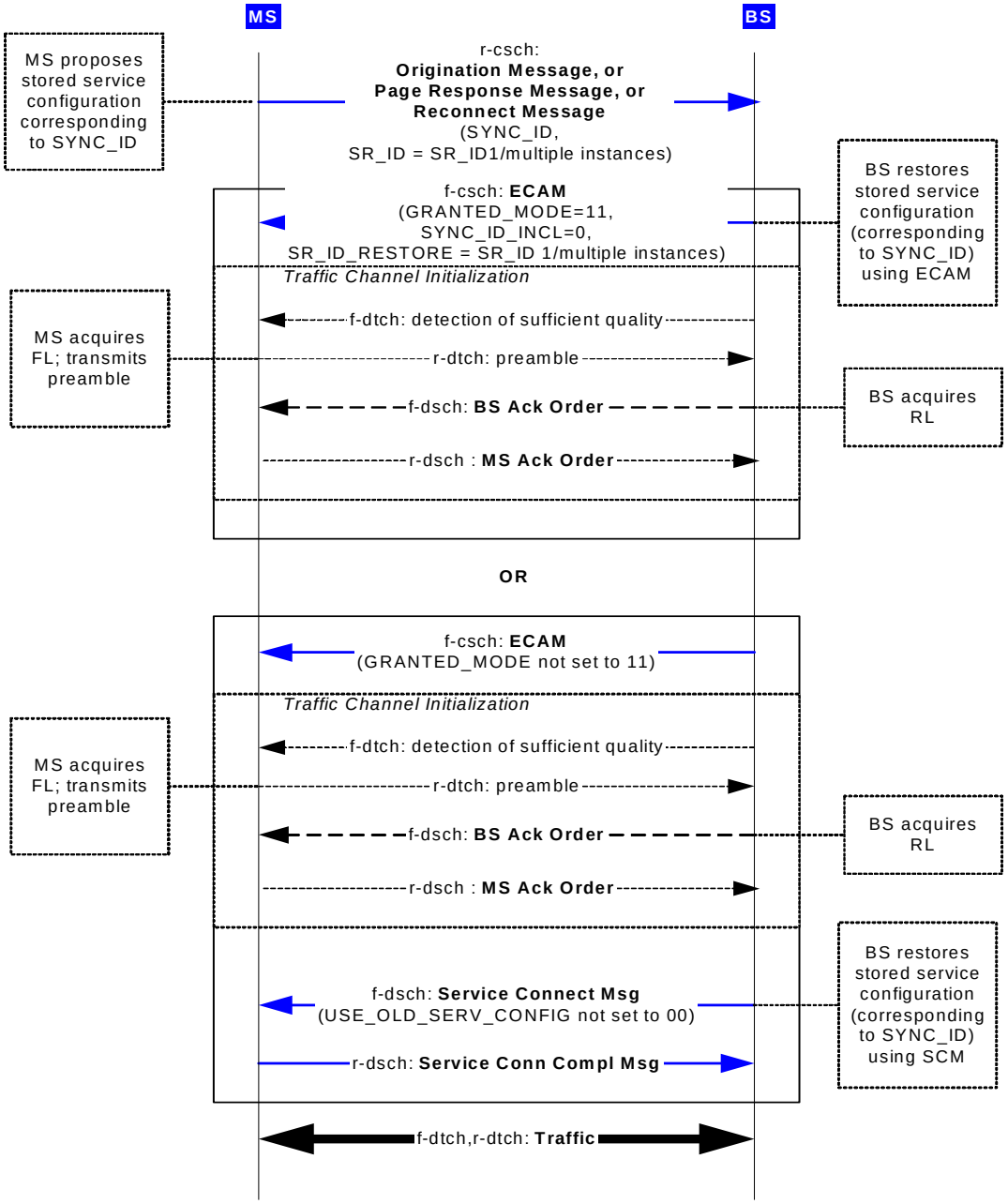

Figure C-3. 1 SYNC_ID in Origination/Page Response/Reconnect Message and BS grants it via ECAM or SCM

C-3.2 SYNC_ID in Origination/Page Response/Reconnect Message and BS assigns a different one in ECAM or SCM

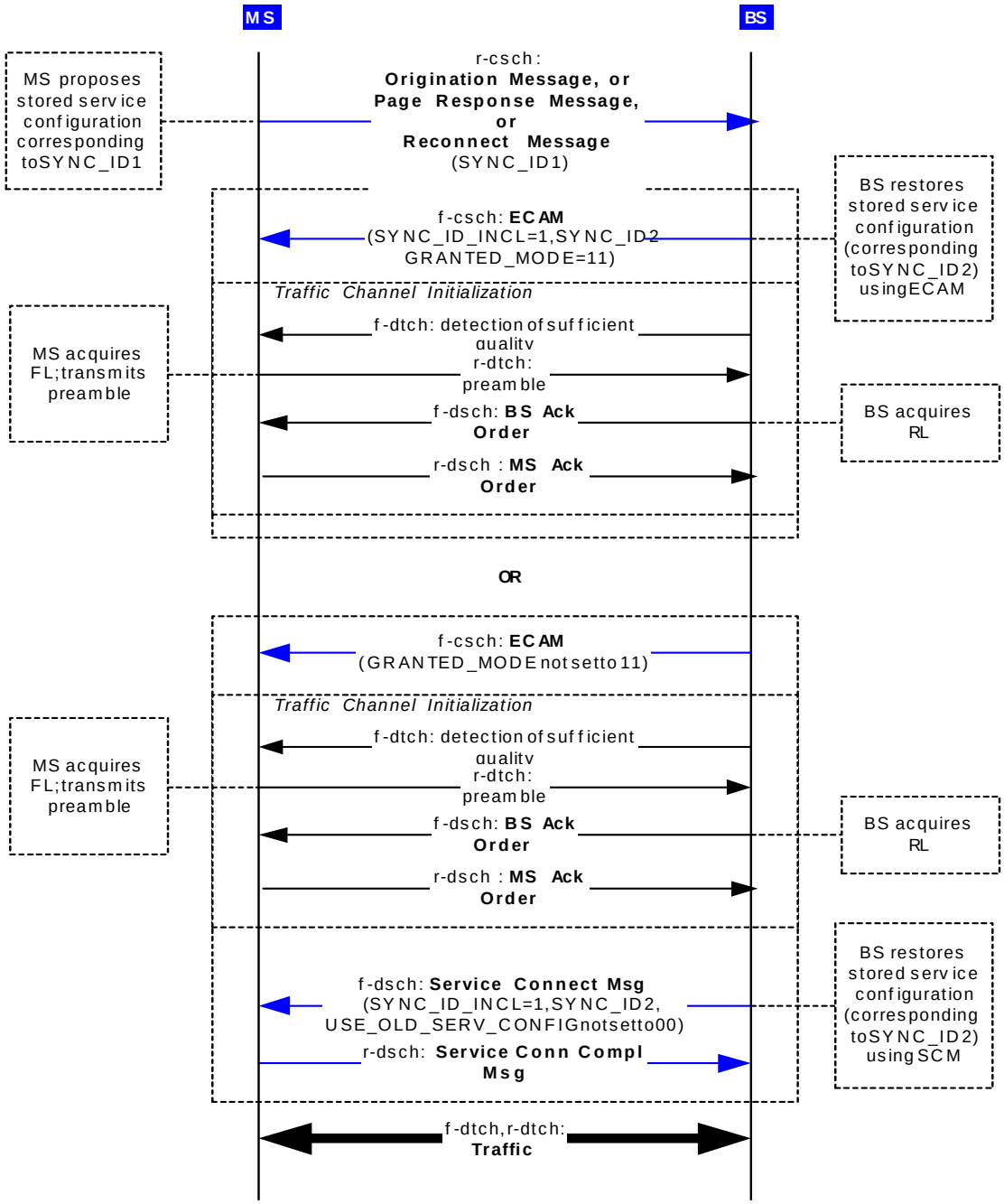

Figure C-3. 2 SYNC_ID in Origination/Page Response/Reconnect Message and BS assigns a different one in ECAM or SCM

C-3.3 Incremental restoration of stored service option connections with SYNC_ID (ORM + EOM example)

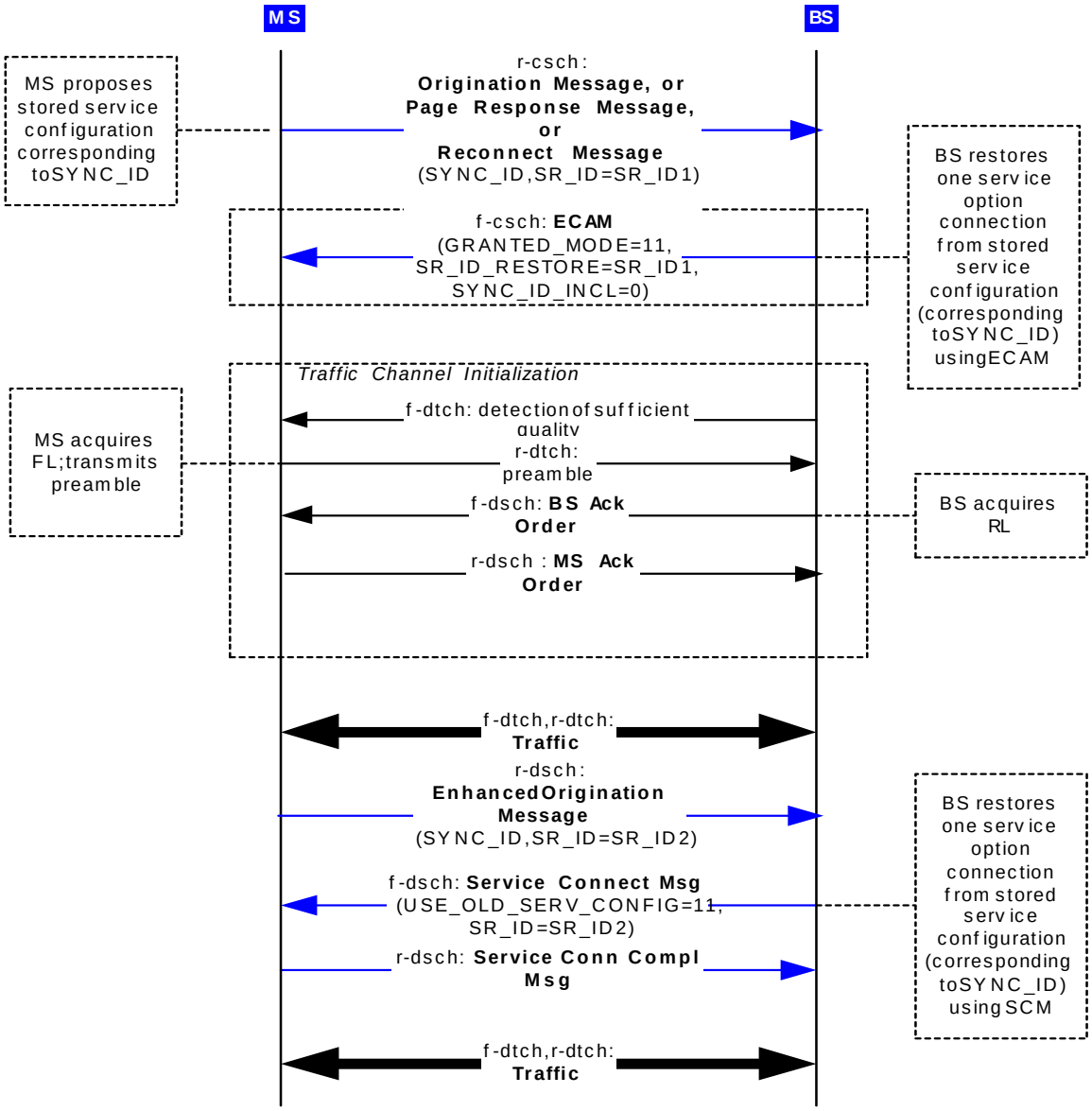

Figure C-3. 3 Incremental restoration of stored service option connections with SYNC_ID (ORM + EOM example)

C-3.4 Initiate M of N service option connections from SYNC_ID

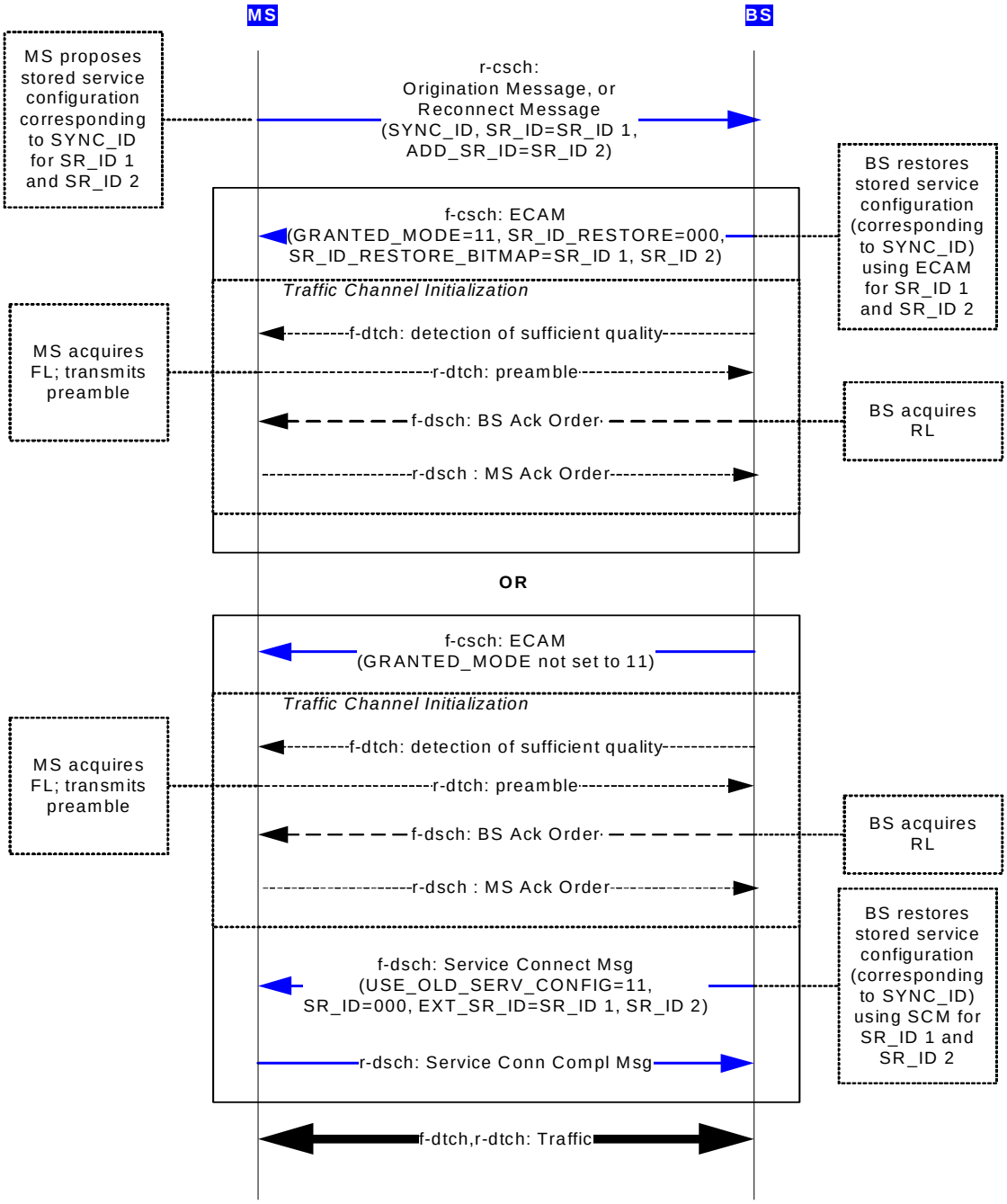

Figure C-3. 4 Initiate M of N service option connections from SYNC_ID

C-4 DV Control Hold

C-4.1 BS initiated transition from DV Control Hold Mode (F-PDCH without F-DCCH)

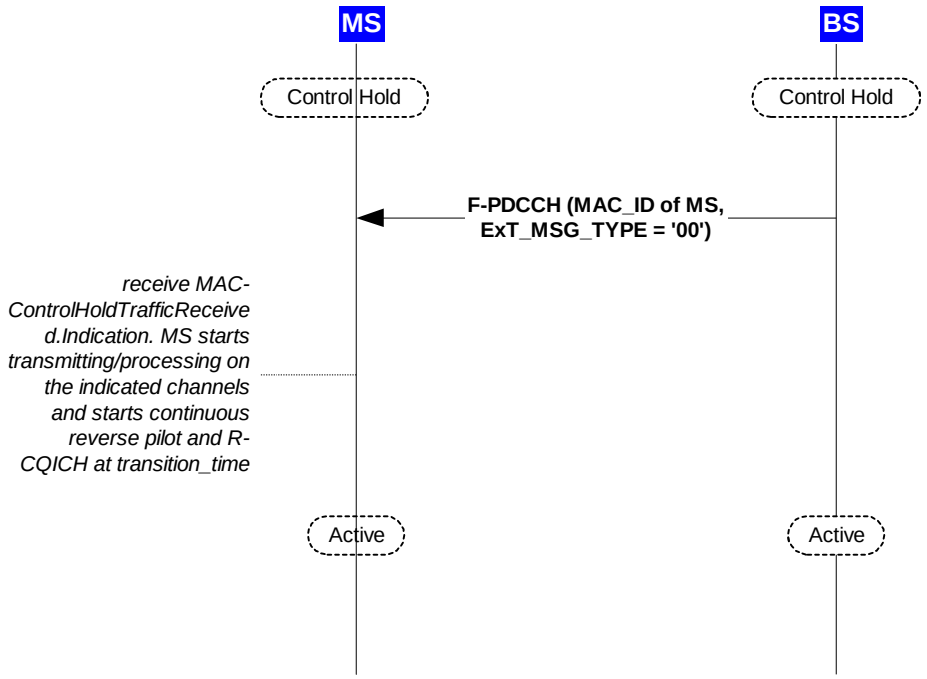

Figure C-4. 1 BS initiated transition from DV Control Hold Mode (F-PDCH without F-DCCH)

C-4.2 BS initiated transition from DV Control Hold Mode (F-PDCH with F-DCCH)

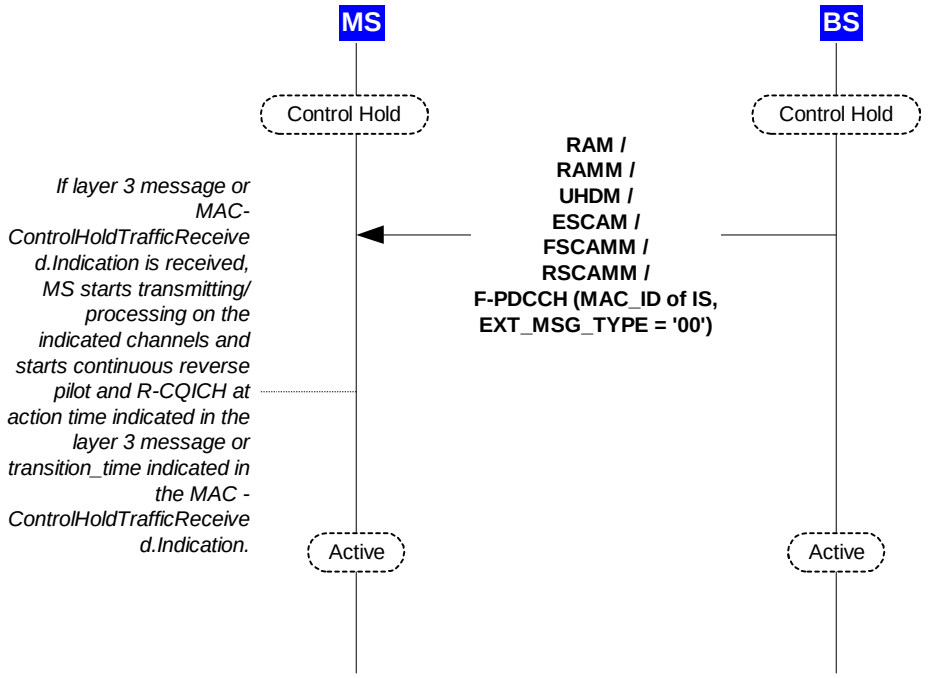

Figure C-4. 2 BS initiated transition from DV Control Hold Mode (F-PDCH with F-DCCH)

C-5 Multiple Services Support

C-5.1 Initiate multiple calls in Origination Message

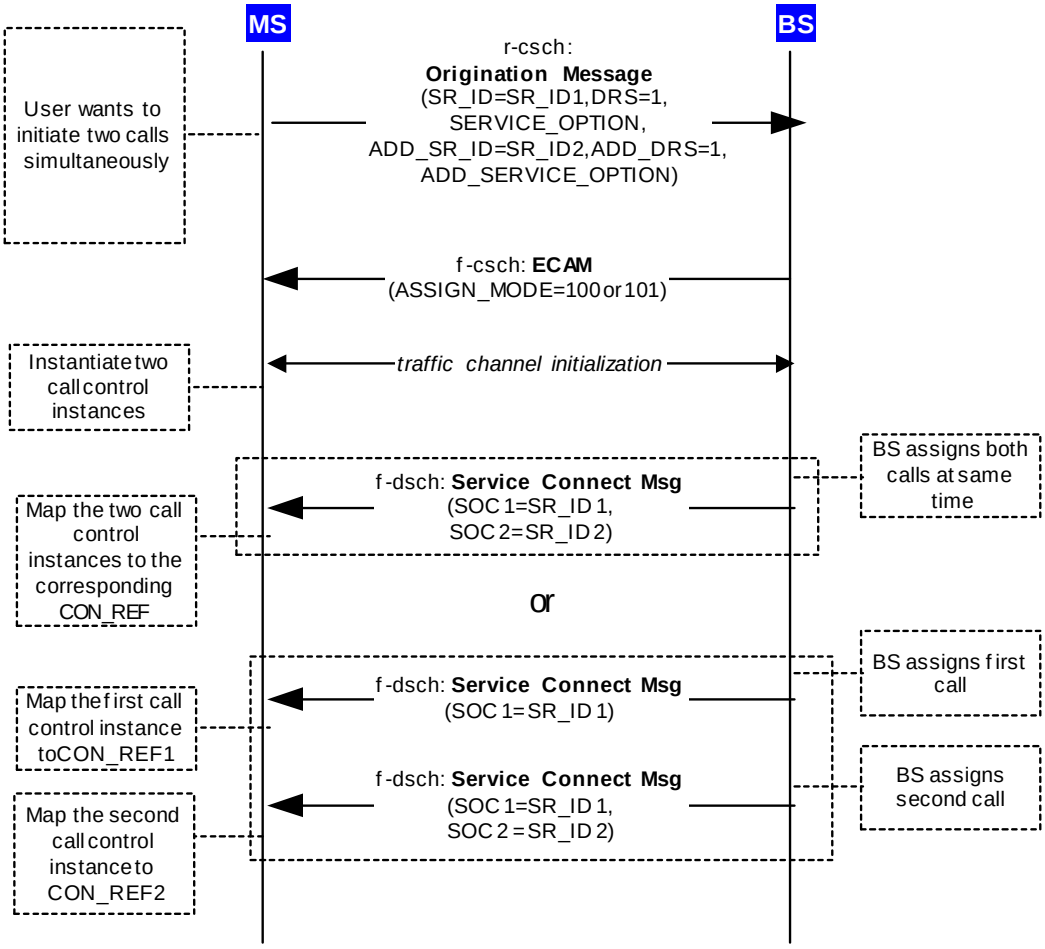

Figure C-5. 1 Initiate multiple calls in Origination Message

C-5.2 Request release of multiple calls via RRRM

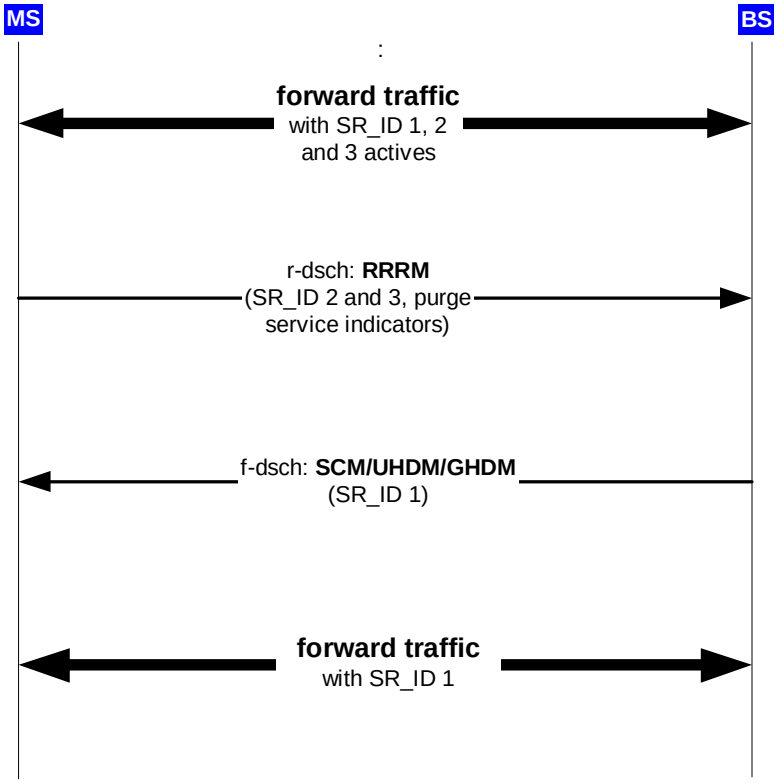

Figure C-5. 2 Request release of multiple calls via RRRM

C-6 BCMC

C-6.1 Initiating BCMC monitoring in idle state that results in Registration Message

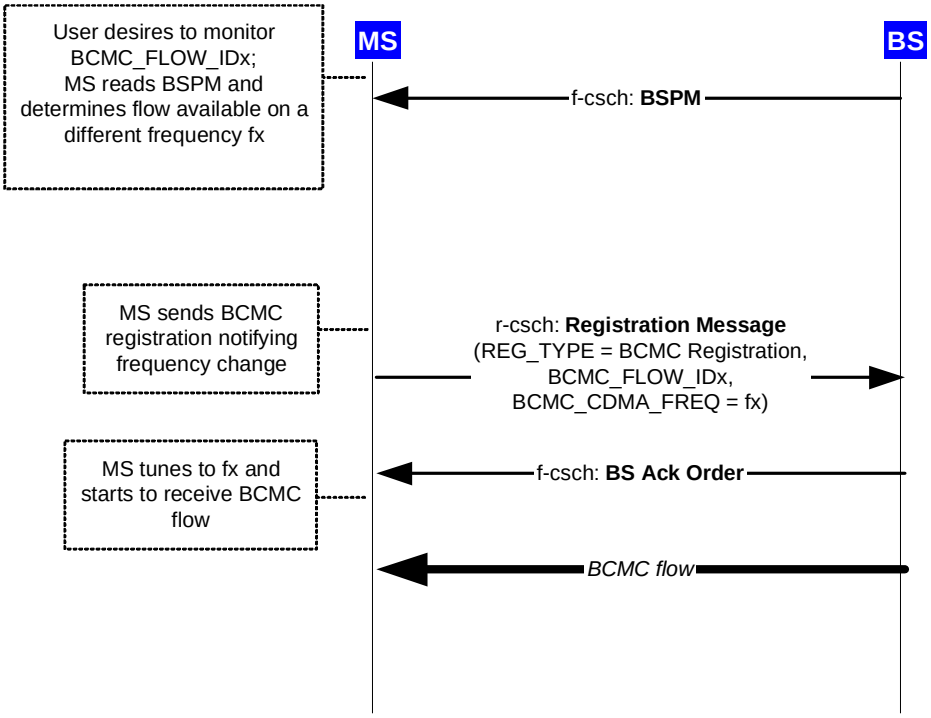

Figure C-6. 1 Initiating BCMC monitoring in idle state that results in Registration Message

C-6.2 Initiating BCMC monitoring in idle state that results in Origination Message and directed to Idle State BCMC

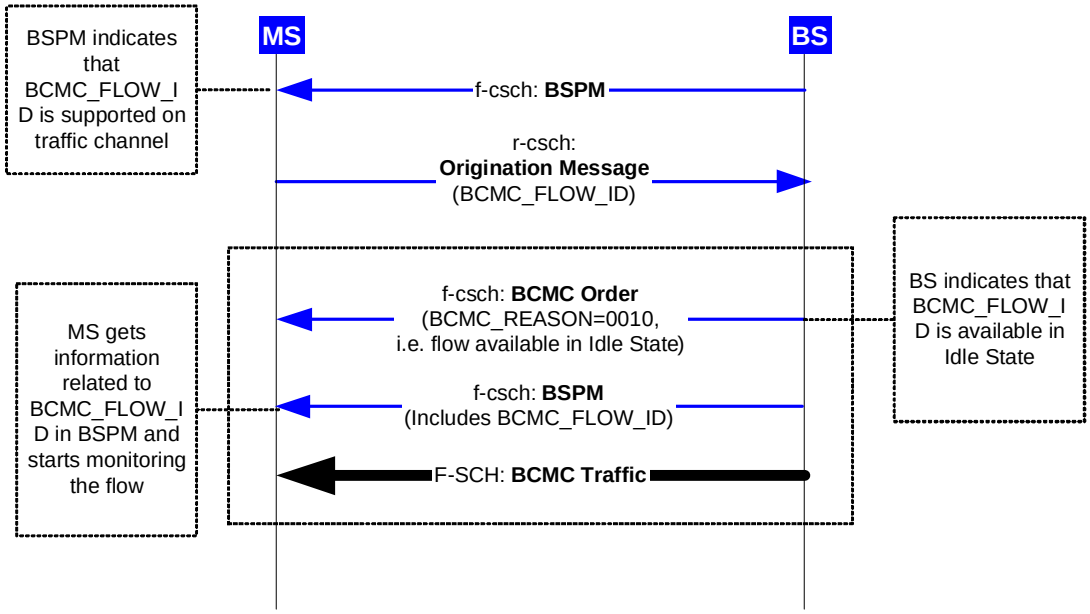

Figure C-6. 2 Initiating BCMC monitoring in idle state that results in Origination Message and directed to Idle State BCMC

C-6.3 Initiating BCMC monitoring in idle state that results in Origination Message and assigned to Traffic State BCMC

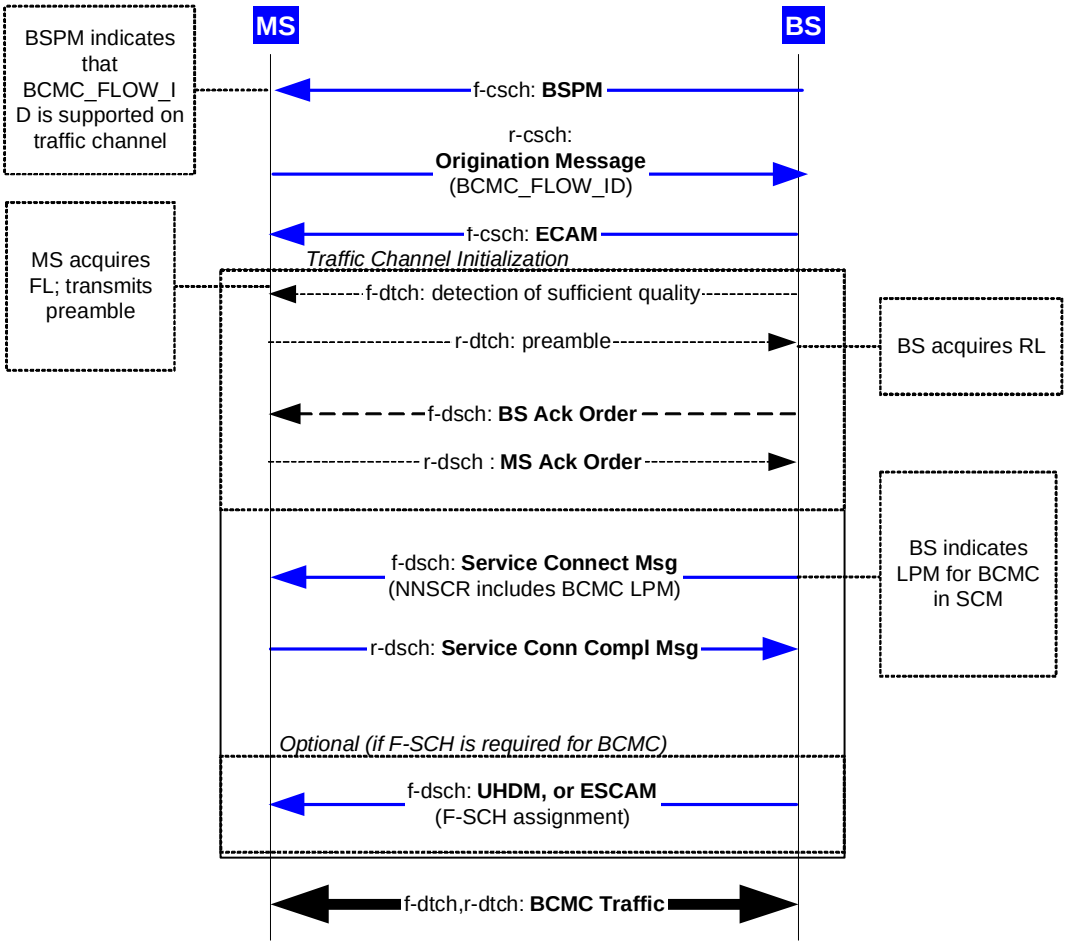

Figure C-6. 3 Initiating BCMC monitoring in idle state that results in Origination Message and assigned to Traffic State BCMC

C-6.4 Dynamic BCMC in idle state

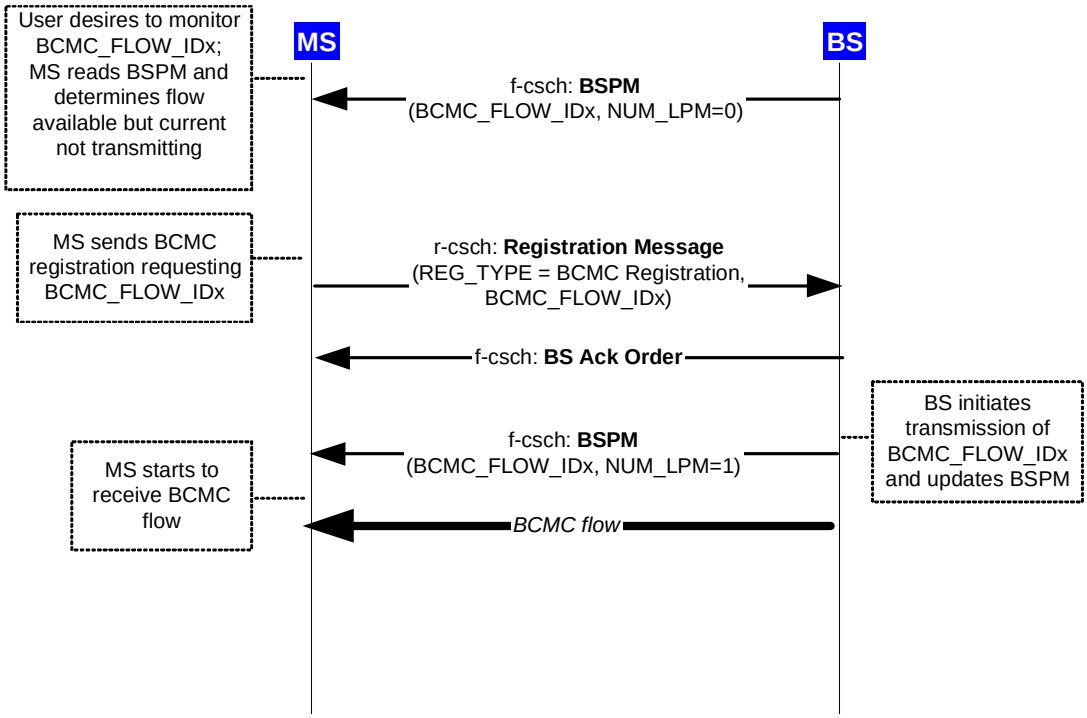

Figure C-6. 4 Dynamic BCMC in idle state

C-6.5 Initiating BCMC in traffic state

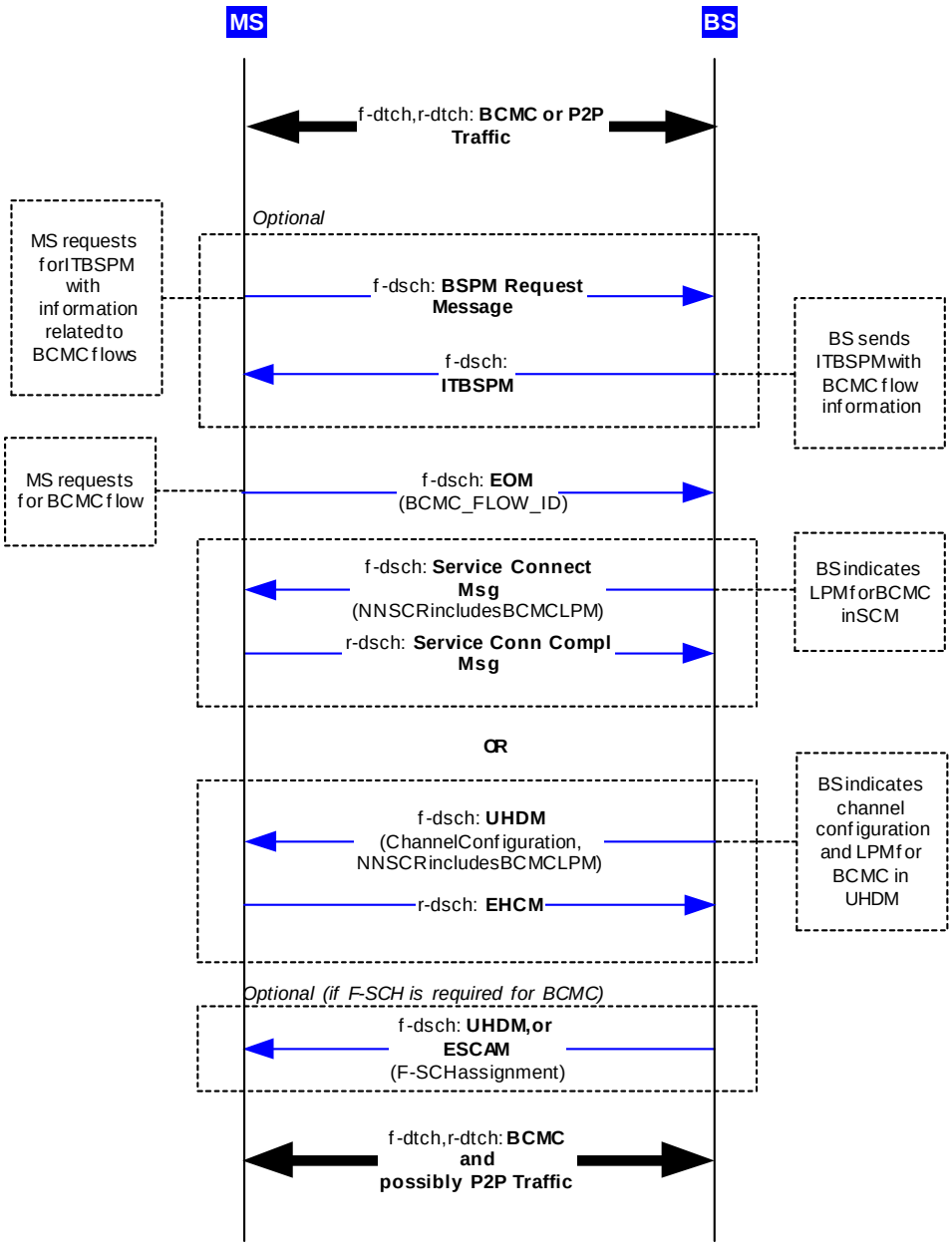

Figure C-6. 5 Initiating BCMC in traffic state

C-6.6 Traffic State BCMC to Idle State BCMC transition

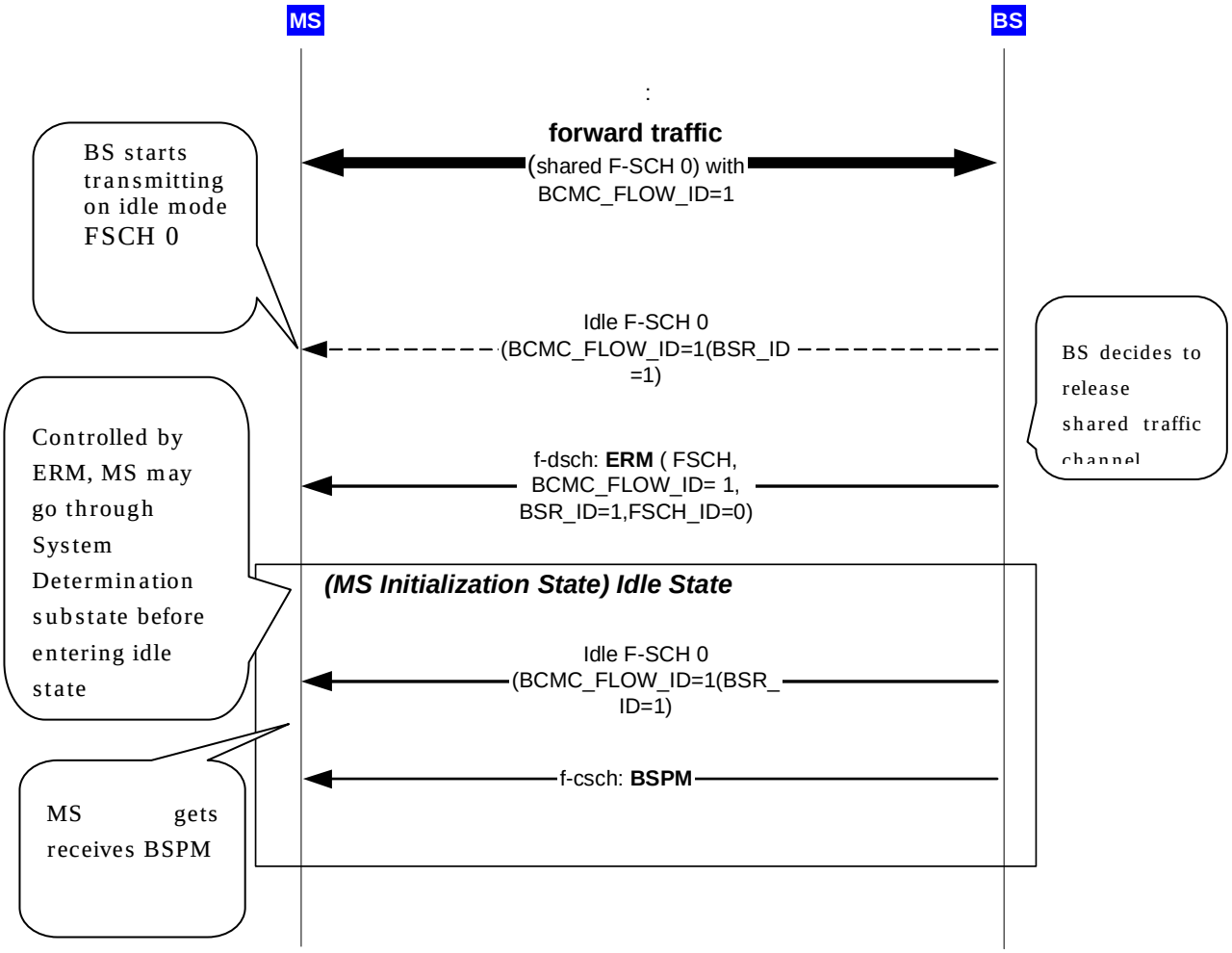

Figure C-6. 6 Traffic State BCMC to Idle State BCMC transition

C-6.7 Concurrent BCMC flows monitoring

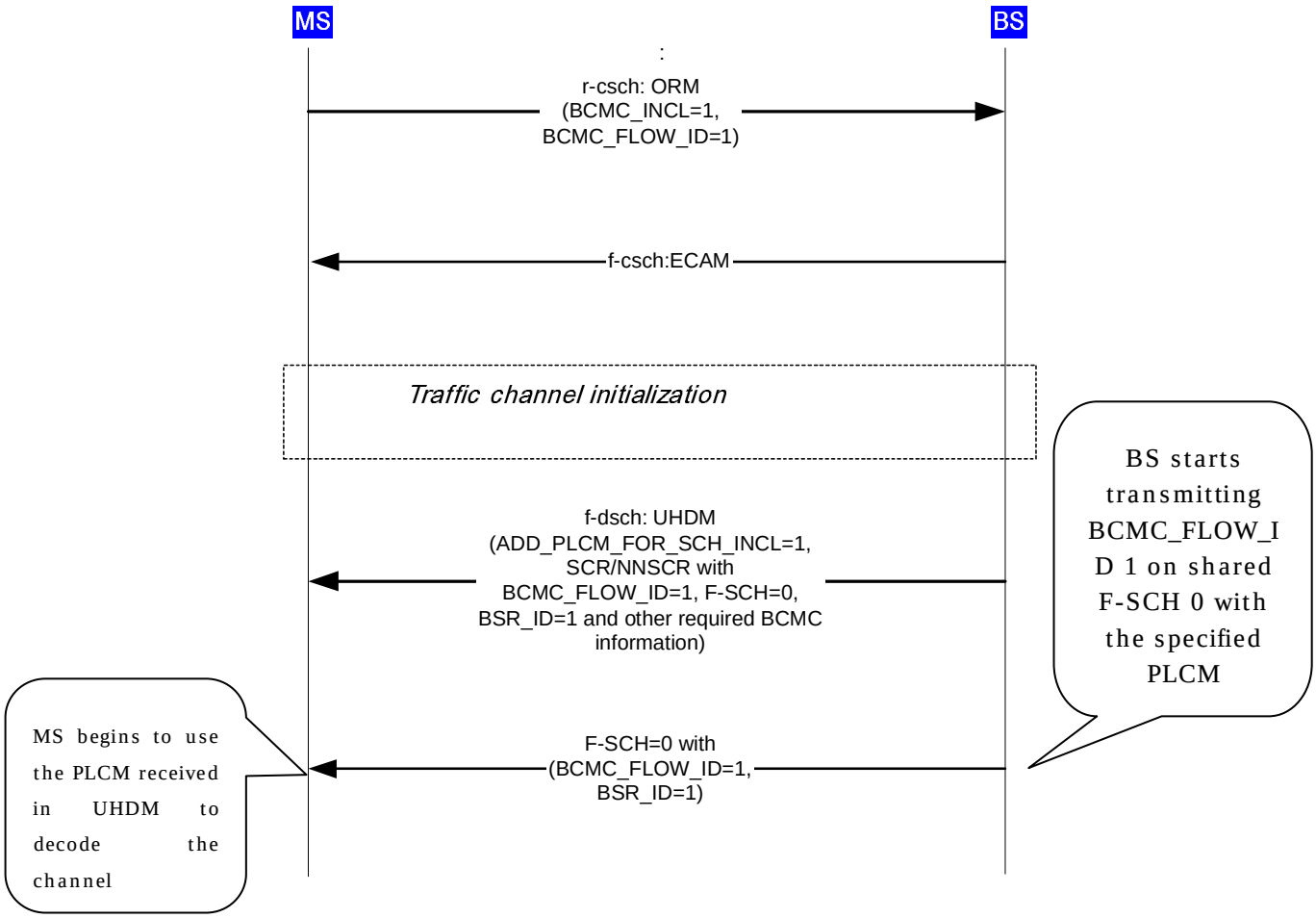

Figure C-6. 7 Concurrent BCMC flows monitoring

C-6.8 Concurrent BCMC and Point-to-Point call

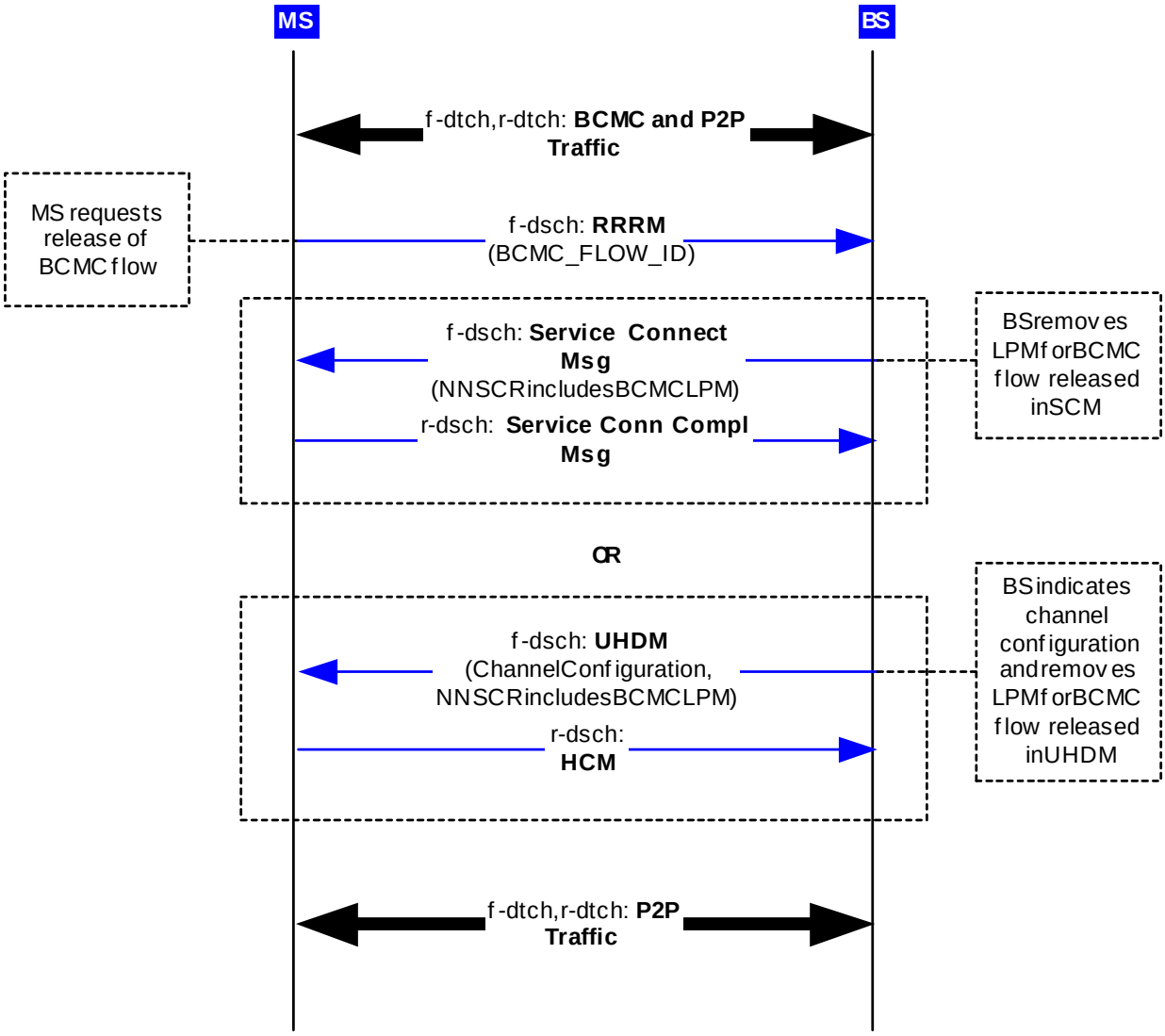

Figure C-6. 8 Concurrent BCMC and Point-to-Point call

ANNEX D CDMA CONSTANTS

Annex D is a normative annex which contains tables that give specific values for the constant identifiers. These identifiers take the forms such as T_{20m} and N_{5m}. The subscripted numbers vary to identify the particular constant. Typically the subscripted letter "m" refers to the mobile station and the subscripted letter "b" refers to the base station. The following tables provide values for identifiers given in the text:

Table D-1. Time Limits

Table D-2. Other Constants

Table D-1. Time Limits (Part 1 of 5)

Time Limit	Description	Value	References
T_{5m}	Limit of the Forward Traffic Channel fade timer	5 s	2.6.4.1.8
T_{20m}	Maximum time to remain in the *Pilot Channel Acquisition Substate* of the *Mobile Station Initialization State*	15 s	2.6.1.2
T_{21m}	Maximum time to receive a valid Sync Channel message	1 s	2.6.1.3
T_{30m}	Maximum time to receive a valid Paging Channel or Forward Common Control Channel/Broadcast Control Channel message	3 s	2.6.2.1.1.1
T_{31m}	Maximum time for which configuration parameters are considered valid	600 s	2.6.2.2
T_{32m}	Maximum time to enter the *Update Overhead Information Substate* of the *System Access State* to respond to an *SSD Update Message*, *Base Station Challenge Confirmation Order*, *Authentication Challenge Message*, and *Authentication Request Message*	5 s	2.6.2.4 2.6.4

Table D-1. Time Limits (Part 2 of 5)

Time Limit	Description	Value	References
T_{33m}	Maximum time to enter the *Update Overhead Information Substate* of the *System Access State* (except in response to authentication messages)	0.3 s	2.6.2 2.6.5.5.2.3
T_{34m}	Maximum time to enter the *Update Overhead Information Substate* or the *Mobile Station Idle State* after receiving a *Channel Assignment Message* with $ASSIGN\_MODE_r$ equal to '001' or '101' or *Extended Channel Assignment Message* with $ASSIGN\_MODE_r$ equal to '001'	3 s	2.6.3.3
T_{40m}	Maximum time to receive a valid Paging Channel or Forward Common Control Channel/Broadcast Control Channel message before aborting an access attempt (see T_{72m})	3 s	2.6.3.1.8
T_{41m}	Maximum time to obtain updated overhead messages arriving on the Paging Channel or Broadcast Control Channel	4 s	2.6.3.2
T_{42m}	Maximum time to receive a delayed Layer 3 response following the receipt of an acknowledgment for an access probe in the *System Access State*. The maximum time to receive a Layer 3 response to an *Enhanced Origination Message* on the *Mobile Station Control on the Traffic Channel State*. The maximum time to receive connection reference after call control instance is instantiated.	12 s	2.6.3.1.1.2 2.6.3.3 2.6.3.5 2.6.4

T_{50m}	When a F-CPCCH is not assigned: • Maximum time to obtain ($N_{5m} \times 20$) ms of sufficient signal quality on the physical channel corresponding to $FPC\_PRI\_CHAN_S$ when in the *Traffic Channel Initialization Substate* of the *Mobile Station Control on the Traffic Channel State* When a F-CPCCH is assigned: • Maximum time to obtain ($N_{18m} \times 1.25$) ms of sufficient signal quality on the Forward Common Power Control Subchannel assigned to this mobile station when in the *Traffic Channel Initialization Substate* of the *Mobile Station Control on the Traffic Channel State*	1 s	2.6.4.2
T_{51m}	Maximum time for the mobile station to receive a *forward dedicated channel acquired* indication from Layer 2 (see [4]) after the transmitter was last enabled.	2 s	2.6.4.2
T_{52m}	Maximum time to receive a message in the *Waiting for Order Substate* of the Call Control processing that transits Call Control instance to a different substate or state	5 s	2.6.10.1.1

Table D-1. Time Limits (Part 3 of 5)

Time Limit	Description	Value	References
T_{53m}	Maximum time to receive a message in the *Waiting for Mobile Station Answer Substate* of Call Control processing that transits the Call Control instance to a different substate or state	65 s	2.6.10.1.2
T_{54m}	Maximum time for the Call Control instance to send an *Origination Continuation Message* upon entering the *Conversation Substate*	0.2 s	2.6.10.2
T_{55m}	Maximum time to receive a message in the *Release Substate* of the *Mobile Station Control on the Traffic Channel State* that transits the mobile station to a different substate or state	2 s	2.6.4.4
T_{56m}	Default maximum time to respond to a received message or order on the Forward Traffic Channel	0.2 s	2.6.4 2.6.6
T_{57m}	Limit of the power-up registration timer	20 s	2.6.5.1.1 2.6.5.5.1.3
T_{58m}	Maximum time for the mobile station to respond to a service option request	5 s	2.6.4.1.2.2
T_{59m}	Maximum time for the mobile station to respond to a *Service Request Message* or a *Service Response Message*	5 s	2.6.4.1.2.2
T_{60m}	Maximum time to execute a hard handoff without return on failure involving a new frequency assignment using the same base station	0.06 s	2.6.6.2.8.1
T_{61m}	Maximum time to execute a hard handoff without return on failure involving a new frequency assignment using a different base station	0.08 s	2.6.6.2.8.1

Table D-1. Time Limits (Part 4 of 5)

Time Limit	Description	Value	References
T_{62m}	Maximum time to execute a hard handoff without return on failure involving the same frequency assignment	0.02 s	2.6.6.2.8.1
T_{63m}	Reserved (Previously: Maximum time to execute a CDMA-to-Analog handoff)		
T_{64m}	Maximum time to wait for a *Base Station Challenge Confirmation Order*	10 s	2.3.12.1.5
T_{65m}	Maximum time for the mobile station to wait for a *Service Connect Message* while the *Waiting for Service Connect Message Subfunction* is active	5 s	2.6.4.1.2.2.4
T_{66m}	Maximum time for the mobile station to delete the TMSI after TMSI expiration time has exceeded the System Time	200 s	2.6.2
T_{68m}	Maximum time for the mobile station to wait for a *Service Request Message, Service Response Message*, or *Service Connect Message* while the *Waiting for Service Request Message Subfunction* or *Waiting for Service Response Message Subfunction* is active	5 s	2.6.4.1.2.2.2 2.6.4.1.2.2.3
T_{69m}	Fixed portion of the full-TMSI timer	24 s	2.6.3.1.6
T_{70m}	Maximum time between the mobile station's obtaining a measurement and sending a *Candidate Frequency Search Report Message* which contains that measurement	0.8 s	2.6.6.2.8.3 2.6.6.2.10
T_{71m}	Maximum time for the mobile station to send a *Candidate Frequency Search Report Message* after completing a search	0.04 s	2.6.6.2.8.3
T_{72m}	Maximum time to receive a valid Paging Channel or Forward Common Control Channel/Broadcast Control Channel message before aborting an access attempt, when there exists at least one access handoff candidate pilot for the access attempt (see also T_{40m})	1 s	2.6.3.1.8
T_{73m}	Maximum time for the mobile station to send a *Handoff Completion Message* after the action time of a received handoff message directing the mobile station to perform a hard handoff without return on failure	0.3s	2.6.6.2.5.2
T_{74m}	Default value of the slotted timer	0.0s	2.6.4.2

Table D-1. Time Limits (Part 5 of 5)

Time Limit	Description	Value	References
T_{75m}	Default value of the key set-up timer	10 s	2.3.12.5
T_{78m}	Maximum time for the mobile station to receive a Physical Layer PDCH SDU destined for this mobile station when in the *Traffic Channel State*	30 s	2.6.4.1.8.2
T_{79m}	Maximum time the mobile station is allowed to keep the transmitter on while attempting to obtain sufficient signal quality on the forward link when in the *Traffic Channel Initialization Substate* of the *Mobile Station Control on the Traffic Channel State* and *when early* reverse link *transmission is allowed*. When a F-CPCCH is not assigned: Maximum time the mobile station is allowed to keep the transmitter on while attempting to obtain ($N_{5m} \times 20$) ms of sufficient signal quality on the physical channel corresponding to $FPC\_PRI\_CHAN_S$ when in the *Traffic Channel Initialization Substate* of the *Mobile Station Control on the Traffic Channel State*. When a F-CPCCH is assigned: Maximum time the mobile station is allowed to keep the transmitter on while attempting to obtain ($N_{18m} \times 1.25$) ms of sufficient signal quality on the Forward Common Power Control Subchannel assigned to this mobile station when in the *Traffic Channel Initialization Substate* of the *Mobile Station Control on the Traffic Channel State.*	0.1s	2.6.4.2
T_{80m}	Maximum time the mobile station is allowed to remain in the *Traffic Channel Substate* of the *Mobile Station Control on the Traffic Channel State* while waiting for the *Base Station Acknowledgment Order.*	0.1s	3.6.4.2
T_{81m}	Default maximum time the mobile station's transmitter can be disabled before the MAC Layer is to perform Forward Packet Data Channel initialization.	0.1s	2.6.3.3 2.6.3.5

T_{1b}	Maximum period between subsequent transmissions of an overhead message on the Paging Channel by the base station	1.28 s	3.6.2.2
T_{2b}	Maximum time for the base station to send a *Release Order* after receiving a *Release Order*	0.8 s	3.6.4
T_{3b}	Minimum time the base station continues to transmit on a code channel after sending or receiving a *Release Order*	0.3 s	3.6.4.5
T_{4b}	Maximum time for the base station to respond to a service option request	5 s	3.6.4.1.2.2.1
T_{5b}	Minimum time a base station should wait before assigning a Forward Common Power Control Channel subchannel to another mobile station when the mobile station previously assigned this subchannel did not respond to the Layer 3 message sent to release the call.	10 s	3.6.4.4

Table D-2. Other Constants (Part 1 of 2)

Con-stant	Description	Value	References
N_{2m}	The duration, of insufficient signal quality (e.g. bad frames), in units of 20ms, received on the Forward Traffic Channel before a mobile station must disable its transmitter	12	2.6.4.1.8.1
N_{3m}	The duration, of sufficient signal quality (e.g. good frames), in units of 20ms, received on the Forward Traffic Channel before a mobile station is allowed to re-enable its transmitter after disabling its transmitter	2	2.6.4.1.8.1
N_{4m}	Reserved		
N_{5m}	The duration, of sufficient signal quality (e.g. good frames), in units of 20ms, received on the Forward Traffic Channel before a mobile station is allowed to enable its transmitter after entering the *Traffic Channel Initialization Substate* of the *Mobile Station Control on the Traffic Channel State*	2	2.6.4.2
N_{6m}	Supported Traffic Channel Active Set size	6	2.6.6.2.6.1 3.6.6.2.2.2 3.6.6.2.2.10
N_{7m}	Supported Traffic Channel Candidate Set size	10	2.6.6.2.6.2
N_{8m}	Minimum supported Neighbor Set size	40	2.6.2.1.4.1 2.6.2.2.3 2.6.6.2.6.3 3.6.6.2.1.2 3.6.6.2.1.3
N_{9m}	Minimum supported zone list size	7	2.6.5.1.5
N_{10m}	SID/NID list size	4	2.6.5

Table D-2. Other Constants (Part 2 of 2)

N_{11m}	The duration, of sufficient signal quality (e.g. good frames), in units of 20ms, received on the Forward Traffic Channel before a mobile station re-enables its transmitter after disabling its transmitter during a CDMA-to-CDMA Hard Handoff	1	2.6.6.2.8
N_{12m}	Number of frames over which the mobile station maintains a running average of the total received power	10	2.6.6.2.8.3
N_{13m}	Maximum number of pilots reported in an Access Channel message	6	2.6.3.1.7 2.7.1.3.1.3
N_{16m}	The duration of insufficient signal quality, in units of 1.25ms, received on the Forward Common Power Control Subchannels assigned to this mobile station, before a mobile station must disable its transmitter.	384 (if F-CPCCH rate is 800 bps) 576 (if F-CPCCH rate is 400 bps) 768 (if F-CPCCH rate is 200 bps)	2.6.4.1.8.2
N_{17m}	The duration of sufficient signal quality, in units of 1.25 ms, received on the Forward Common Power Control Subchannels assigned to this mobile station, before a mobile station is allowed to re-enable its transmitter after disabling its transmitter	64 (if F-CPCCH rate is 800 bps) 128 (if F-CPCCH rate is 400 bps) 160 (if F-CPCCH rate is 200 bps)	2.6.4.1.8.2
N_{18m}	The duration of sufficient signal quality, in units of 1.25 ms, received on the Forward Common Power Control Subchannels assigned to this mobile station, before a mobile station is allowed to enable its transmitter after entering the *Traffic Channel Initialization Substate* of the *Mobile Station Control on the Traffic Channel State*	32 (if F-CPCCH rate is 800 bps) 64 (if F-CPCCH rate is 400 bps) 64 (if F-CPCCH rate is 200 bps)	2.6.4.2
N_{19m}	The duration, of sufficient signal quality, in units of 1.25 ms, received on the Forward Common Power Control Subchannels assigned to this mobile station, before a mobile station re-enables its transmitter after disabling its transmitter during a CDMA-to-CDMA Hard Handoff	16 (if F-CPCCH rate is 800 bps) 32 (if F-CPCCH rate is 400 bps) 32 (if F-CPCCH rate is 200 bps)	2.6.6.2.8

This page intentionally left blank.

ANNEX E CDMA RETRIEVABLE AND SETTABLE PARAMETERS

This is a normative annex which describes the parameters that can be retrieved and set in the mobile station using the *Retrieve Parameters Message*, the *Parameters Response Message*, and the *Set Parameters Message*.

PARAMETER_ID values from 0 through 32767 are reserved for definition by this standard and shall not be defined by mobile station manufacturers. PARAMETER_ID values from 32768 through 65535 may be defined by mobile station manufacturers.

1

Table E-1. Retrievable and Settable Parameters					
Parameter Identifier	**Value of PARA-METER_ID (decimal)**	**Length (bits) (PARA-METER_LEN is Length - 1)**	**Support Required? (Y or N)**	**Settable Parameter? (Y or N)**	**Reference**
MUX1_REV_FCH_1	1	24	Y	Y	[3]
MUX1_REV_FCH_2	2	24	Y	Y	[3]
MUX1_REV_FCH_3	3	24	Y	Y	[3]
MUX1_REV_FCH_4	4	24	Y	Y	[3]
MUX1_REV_FCH_5	5	24	Y	Y	[3]
MUX1_REV_FCH_6	6	24	Y	Y	[3]
MUX1_REV_FCH_7	7	24	Y	Y	[3]
MUX1_REV_FCH_8	8	24	Y	Y	[3]
MUX1_REV_FCH_9	9	24	Y	Y	[3]
MUX1_REV_FCH_10	10	N/A	N/A	N/A	[3]
MUX1_REV_FCH_11	11	24	N	Y	[3]
MUX1_REV_FCH_12	12	24	N	Y	[3]
MUX1_REV_FCH_13	13	24	N	Y	[3]
MUX1_REV_FCH_14	14	24	N	Y	[3]
MUX1_FOR_FCH_1	15	24	Y	Y	[3]
MUX1_FOR_FCH_2	16	24	Y	Y	[3]
MUX1_FOR_FCH_3	17	24	Y	Y	[3]
MUX1_FOR_FCH_4	18	24	Y	Y	[3]
MUX1_FOR_FCH_5	19	24	Y	Y	[3]
MUX1_FOR_FCH_6	20	24	Y	Y	[3]
MUX1_FOR_FCH_7	21	24	Y	Y	[3]
MUX1_FOR_FCH_8	22	24	Y	Y	[3]

2

1

Table E-1. Retrievable and Settable Parameters					
Parameter Identifier	**Value of PARA-METER_ID (decimal)**	**Length (bits) (PARA-METER_LEN is Length - 1)**	**Support Required? (Y or N)**	**Settable Parameter? (Y or N)**	**Reference**
MUX1_FOR_FCH_9	23	24	Y	Y	[3]
MUX1_FOR_FCH_10	24	24	Y	Y	[3]
MUX1_FOR_FCH_11	25	24	N	Y	[3]
MUX1_FOR_FCH_12	26	24	N	Y	[3]
MUX1_FOR_FCH_13	27	24	N	Y	[3]
MUX1_FOR_FCH_14	28	24	N	Y	[3]
PAG_1	29	24	Y	Y	[4]
PAG_2	30	24	Y	Y	[4]
PAG_3	31	16	Y	Y	[4]
PAG_4	32	24	Y	Y	[4]
PAG_5	33	24	Y	Y	[4]
PAG_6	34	16	Y	Y	2.4
PAG_7	35	16	Y	Y	2.4
ACC_1	36	16	Y	Y	[4]
ACC_2	37	16	Y	Y	[4]
ACC_3	38	16	Y	Y	[4]
ACC_4	39	16	Y	Y	[4]
ACC_5	40	16	Y	Y	[4]
ACC_6	41	16	Y	Y	[4]
ACC_7	42	16	Y	Y	[4]
ACC_8	43	16	Y	Y	[4]
LAYER2_RTC1	44	16	Y	Y	[4]
LAYER2_RTC2	45	16	Y	Y	[4]
LAYER2_RTC3	46	16	Y	Y	[4]
LAYER2_RTC4	47	16	Y	Y	[4]
LAYER2_RTC5	48	16	Y	Y	[4]
OTHER_SYS_TIME	49	36	Y	N	2.4

2

1

Table E-1. Retrievable and Settable Parameters					
Parameter Identifier	**Value of PARA-METER_ID (decimal)**	**Length (bits) (PARA-METER_LEN is Length - 1)**	**Support Required? (Y or N)**	**Settable Parameter? (Y or N)**	**Reference**
MUX2_REV_FCH_1	50	24	Y	Y	[3]
MUX2_REV_FCH_2	51	24	Y	Y	[3]
MUX2_REV_FCH_3	52	24	Y	Y	[3]
MUX2_REV_FCH_4	53	24	Y	Y	[3]
MUX2_REV_FCH_5	54	24	Y	Y	[3]
MUX2_REV_FCH_6	55	24	Y	Y	[3]
MUX2_REV_FCH_7	56	24	Y	Y	[3]
MUX2_REV_FCH_8	57	24	Y	Y	[3]
MUX2_REV_FCH_9	58	24	Y	Y	[3]
MUX2_REV_FCH_10	59	24	Y	Y	[3]
MUX2_REV_FCH_11	60	24	Y	Y	[3]
MUX2_REV_FCH_12	61	24	Y	Y	[3]
MUX2_REV_FCH_13	62	24	Y	Y	[3]
MUX2_REV_FCH_14	63	24	Y	Y	[3]
MUX2_REV_FCH_15	64	24	Y	Y	[3]
MUX2_REV_FCH_16	65	24	Y	Y	[3]
MUX2_REV_FCH_17	66	24	Y	Y	[3]
MUX2_REV_FCH_18	67	24	Y	Y	[3]
MUX2_REV_FCH_19	68	24	Y	Y	[3]
MUX2_REV_FCH_20	69	24	Y	Y	[3]
MUX2_REV_FCH_21	70	24	Y	Y	[3]
MUX2_REV_FCH_22	71	24	Y	Y	[3]
MUX2_REV_FCH_23	72	24	Y	Y	[3]
MUX2_REV_FCH_24	73	24	Y	Y	[3]
MUX2_REV_FCH_25	74	24	Y	Y	[3]
MUX2_REV_FCH_26	75	N/A	N/A	N/A	[3]

2

Table E-1. Retrievable and Settable Parameters					
Parameter Identifier	**Value of PARA-METER_ID (decimal)**	**Length (bits) (PARA-METER_LEN is Length - 1)**	**Support Required? (Y or N)**	**Settable Parameter? (Y or N)**	**Reference**
MUX2_FOR_FCH_1	76	24	Y	Y	[3]
MUX2_FOR_FCH_2	77	24	Y	Y	[3]
MUX2_FOR_FCH_3	78	24	Y	Y	[3]
MUX2_FOR_FCH_4	79	24	Y	Y	[3]
MUX2_FOR_FCH_5	80	24	Y	Y	[3]
MUX2_FOR_FCH_6	81	24	Y	Y	[3]
MUX2_FOR_FCH_7	82	24	Y	Y	[3]
MUX2_FOR_FCH_8	83	24	Y	Y	[3]
MUX2_FOR_FCH_9	84	24	Y	Y	[3]
MUX2_FOR_FCH_10	85	24	Y	Y	[3]
MUX2_FOR_FCH_11	86	24	Y	Y	[3]
MUX2_FOR_FCH_12	87	24	Y	Y	[3]
MUX2_FOR_FCH_13	88	24	Y	Y	[3]
MUX2_FOR_FCH_14	89	24	Y	Y	[3]
MUX2_FOR_FCH_15	90	24	Y	Y	[3]
MUX2_FOR_FCH_16	91	24	Y	Y	[3]
MUX2_FOR_FCH_17	92	24	Y	Y	[3]
MUX2_FOR_FCH_18	93	24	Y	Y	[3]
MUX2_FOR_FCH_19	94	24	Y	Y	[3]
MUX2_FOR_FCH_20	95	24	Y	Y	[3]
MUX2_FOR_FCH_21	96	24	Y	Y	[3]
MUX2_FOR_FCH_22	97	24	Y	Y	[3]
MUX2_FOR_FCH_23	98	24	Y	Y	[3]
MUX2_FOR_FCH_24	99	24	Y	Y	[3]
MUX2_FOR_FCH_25	100	24	Y	Y	[3]
MUX2_FOR_FCH_26	101	24	Y	Y	[3]

Table E-1. Retrievable and Settable Parameters					
Parameter Identifier	**Value of PARA-METER_ID (decimal)**	**Length (bits) (PARA-METER_LEN is Length - 1)**	**Support Required? (Y or N)**	**Settable Parameter? (Y or N)**	**Reference**
SCCH1_REV_S	102	24	Y	Y	[3]
SCCH1_REV_P	103	24	Y	Y	[3]
SCCH2_REV_S	104	24	Y	Y	[3]
SCCH2_REV_P	105	24	Y	Y	[3]
SCCH3_REV_S	106	24	Y	Y	[3]
SCCH3_REV_P	107	24	Y	Y	[3]
SCCH4_REV_S	108	24	Y	Y	[3]
SCCH4_REV_P	109	24	Y	Y	[3]
SCCH5_REV_S	110	24	Y	Y	[3]
SCCH5_REV_P	111	24	Y	Y	[3]
SCCH6_REV_S	112	24	Y	Y	[3]
SCCH6_REV_P	113	24	Y	Y	[3]
SCCH7_REV_S	114	24	Y	Y	[3]
SCCH7_REV_P	115	24	Y	Y	[3]
SCCH1_FOR_S	116	24	Y	Y	[3]
SCCH1_FOR_P	117	24	Y	Y	[3]
SCCH2_FOR_S	118	24	Y	Y	[3]
SCCH2_FOR_P	119	24	Y	Y	[3]
SCCH3_FOR_S	120	24	Y	Y	[3]
SCCH3_FOR_P	121	24	Y	Y	[3]
SCCH4_FOR_S	122	24	Y	Y	[3]
SCCH4_FOR_P	123	24	Y	Y	[3]
SCCH5_FOR_S	124	24	Y	Y	[3]
SCCH5_FOR_P	125	24	Y	Y	[3]
SCCH6_FOR_S	126	24	Y	Y	[3]
SCCH6_FOR_P	127	24	Y	Y	[3]
SCCH7_FOR_S	128	24	Y	Y	[3]
SCCH7_FOR_P	129	24	Y	Y	[3]

1

Table E-1. Retrievable and Settable Parameters					
Parameter Identifier	**Value of PARA-METER_ID (decimal)**	**Length (bits) (PARA-METER_LEN is Length - 1)**	**Support Required? (Y or N)**	**Settable Parameter? (Y or N)**	**Reference**
MM_RTC1	130	16	Y	Y	[4]
MM_RTC2	131	16	Y	Y	[4]
MM_RTC3	132	16	Y	Y	[4]
MM_RTC4	133	16	Y	Y	[4]
MM_RTC5	134	16	Y	Y	[4]
MUX1_REV_FCH_15	135	N/A	N/A	N/A	[3]
MUX1_REV_FCH_5_ms	136	24	N	Y	[3]
MUX1_FOR_FCH_15	137	N/A	N/A	N/A	[3]
MUX1_FOR_FCH_5_ms	138	24	N	Y	[3]
MUX2_REV_FCH_27	139	N/A	N/A	N/A	[3]
MUX2_REV_FCH_5_ms	140	24	N	Y	[3]
MUX2_FOR_FCH_27	141	N/A	N/A	N/A	[3]
MUX2_FOR_FCH_5_ms	142	24	N	Y	[3]
MUX1_REV_DCCH_1	143	24	Y	Y	[3]
MUX1_REV_DCCH_2	144	24	Y	Y	[3]
MUX1_REV_DCCH_3	145	24	Y	Y	[3]
MUX1_REV_DCCH_4	146	24	Y	Y	[3]
MUX1_REV_DCCH_5	147	24	Y	Y	[3]
MUX1_REV_DCCH_6	148	N/A	N/A	N/A	[3]
MUX1_REV_DCCH_7	149	N/A	N/A	N/A	[3]
MUX1_REV_DCCH_8	150	N/A	N/A	N/A	[3]
MUX1_REV_DCCH_9	151	N/A	N/A	N/A	[3]
MUX1_REV_DCCH_10	152	N/A	N/A	N/A	[3]
MUX1_REV_DCCH_11	153	24	N	Y	[3]
MUX1_REV_DCCH_12	154	24	N	Y	[3]
MUX1_REV_DCCH_13	155	24	N	Y	[3]
MUX1_REV_DCCH_14	156	24	N	Y	[3]

2

Table E-1. Retrievable and Settable Parameters					
Parameter Identifier	**Value of PARA-METER_ID (decimal)**	**Length (bits) (PARA-METER_LEN is Length - 1)**	**Support Required? (Y or N)**	**Settable Parameter? (Y or N)**	**Reference**
MUX1_REV_DCCH_15	157	24	Y	Y	[3]
MUX1_REV_DCCH_5_ms	158	24	N	Y	[3]
MUX1_FOR_DCCH_1	159	24	Y	Y	[3]
MUX1_FOR_DCCH_2	160	24	Y	Y	[3]
MUX1_FOR_DCCH_3	161	24	Y	Y	[3]
MUX1_FOR_DCCH_4	162	24	Y	Y	[3]
MUX1_FOR_DCCH_5	163	24	Y	Y	[3]
MUX1_FOR_DCCH_6	164	N/A	N/A	N/A	[3]
MUX1_FOR_DCCH_7	165	N/A	N/A	N/A	[3]
MUX1_FOR_DCCH_8	166	N/A	N/A	N/A	[3]
MUX1_FOR_DCCH_9	167	N/A	N/A	N/A	[3]
MUX1_FOR_DCCH_10	168	24	Y	Y	[3]
MUX1_FOR_DCCH_11	169	24	N	Y	[3]
MUX1_FOR_DCCH_12	170	24	N	Y	[3]
MUX1_FOR_DCCH_13	171	24	N	Y	[3]
MUX1_FOR_DCCH_14	172	24	N	Y	[3]
MUX1_FOR_DCCH_15	173	24	Y	Y	[3]
MUX1_FOR_DCCH_5_ms	174	24	N	Y	[3]
MUX2_REV_DCCH_1	175	24	Y	Y	[3]
MUX2_REV_DCCH_2	176	24	Y	Y	[3]
MUX2_REV_DCCH_3	177	24	Y	Y	[3]
MUX2_REV_DCCH_4	178	24	Y	Y	[3]
MUX2_REV_DCCH_5	179	24	Y	Y	[3]
MUX2_REV_DCCH_6	180	24	Y	Y	[3]
MUX2_REV_DCCH_7	181	24	Y	Y	[3]
MUX2_REV_DCCH_8	182	24	Y	Y	[3]
MUX2_REV_DCCH_9	183	24	Y	Y	[3]

Table E-1. Retrievable and Settable Parameters					
Parameter Identifier	**Value of PARA-METER_ID (decimal)**	**Length (bits) (PARA-METER_LEN is Length - 1)**	**Support Required? (Y or N)**	**Settable Parameter? (Y or N)**	**Reference**
MUX2_REV_DCCH_10	184	24	Y	Y	[3]
MUX2_REV_DCCH_11	185	N/A	N/A	N/A	[3]
MUX2_REV_DCCH_12	186	N/A	N/A	N/A	[3]
MUX2_REV_DCCH_13	187	N/A	N/A	N/A	[3]
MUX2_REV_DCCH_14	188	N/A	N/A	N/A	[3]
MUX2_REV_DCCH_15	189	N/A	N/A	N/A	[3]
MUX2_REV_DCCH_16	190	N/A	N/A	N/A	[3]
MUX2_REV_DCCH_17	191	N/A	N/A	N/A	[3]
MUX2_REV_DCCH_18	192	N/A	N/A	N/A	[3]
MUX2_REV_DCCH_19	193	N/A	N/A	N/A	[3]
MUX2_REV_DCCH_20	194	N/A	N/A	N/A	[3]
MUX2_REV_DCCH_21	195	N/A	N/A	N/A	[3]
MUX2_REV_DCCH_22	196	N/A	N/A	N/A	[3]
MUX2_REV_DCCH_23	197	N/A	N/A	N/A	[3]
MUX2_REV_DCCH_24	198	N/A	N/A	N/A	[3]
MUX2_REV_DCCH_25	199	N/A	N/A	N/A	[3]
MUX2_REV_DCCH_26	200	N/A	N/A	N/A	[3]
MUX2_REV_DCCH_27	201	24	Y	Y	[3]
MUX2_REV_DCCH_5_ms	202	24	N	Y	[3]
MUX2_FOR_DCCH_1	203	24	Y	Y	[3]
MUX2_FOR_DCCH_2	204	24	Y	Y	[3]
MUX2_FOR_DCCH_3	205	24	Y	Y	[3]
MUX2_FOR_DCCH_4	206	24	Y	Y	[3]
MUX2_FOR_DCCH_5	207	24	Y	Y	[3]
MUX2_FOR_DCCH_6	208	24	Y	Y	[3]
MUX2_FOR_DCCH_7	209	24	Y	Y	[3]
MUX2_FOR_DCCH_8	210	24	Y	Y	[3]
MUX2_FOR_DCCH_9	211	24	Y	Y	[3]

1

Table E-1. Retrievable and Settable Parameters					
Parameter Identifier	**Value of PARA-METER_ID (decimal)**	**Length (bits) (PARA-METER_LEN is Length - 1)**	**Support Required? (Y or N)**	**Settable Parameter? (Y or N)**	**Reference**
MUX2_FOR_DCCH_10	212	24	Y	Y	[3]
MUX2_FOR_DCCH_11	213	N/A	N/A	N/A	[3]
MUX2_FOR_DCCH_12	214	N/A	N/A	N/A	[3]
MUX2_FOR_DCCH_13	215	N/A	N/A	N/A	[3]
MUX2_FOR_DCCH_14	216	N/A	N/A	N/A	[3]
MUX2_FOR_DCCH_15	217	N/A	N/A	N/A	[3]
MUX2_FOR_DCCH_16	218	N/A	N/A	N/A	[3]
MUX2_FOR_DCCH_17	219	N/A	N/A	N/A	[3]
MUX2_FOR_DCCH_18	220	N/A	N/A	N/A	[3]
MUX2_FOR_DCCH_19	221	N/A	N/A	N/A	[3]
MUX2_FOR_DCCH_20	222	N/A	N/A	N/A	[3]
MUX2_FOR_DCCH_21	223	N/A	N/A	N/A	[3]
MUX2_FOR_DCCH_22	224	N/A	N/A	N/A	[3]
MUX2_FOR_DCCH_23	225	N/A	N/A	N/A	[3]
MUX2_FOR_DCCH_24	226	N/A	N/A	N/A	[3]
MUX2_FOR_DCCH_25	227	N/A	N/A	N/A	[3]
MUX2_FOR_DCCH_26	228	24	Y	Y	[3]
MUX2_FOR_DCCH_27	229	24	Y	Y	[3]
MUX2_FOR_DCCH_5_ms	230	24	N	Y	[3]
SCH0_REV_1X	231	24	Y	Y	[3]
SCH0_REV_2X	232	24	Y	Y	[3]
SCH0_REV_4X	233	24	Y	Y	[3]
SCH0_REV_8X	234	24	Y	Y	[3]
SCH0_REV_16X	235	24	Y	Y	[3]
SCH0_REV_LTU	236	24	Y	Y	[3]
SCH0_REV_LTUOK	237	N/A	N/A	N/A	[3]
SCH1_REV_1X	238	24	Y	Y	[3]
SCH1_REV_2X	239	24	Y	Y	[3]

2

Table E-1. Retrievable and Settable Parameters					
Parameter Identifier	**Value of PARA-METER_ID (decimal)**	**Length (bits) (PARA-METER_LEN is Length - 1)**	**Support Required? (Y or N)**	**Settable Parameter? (Y or N)**	**Reference**
SCH1_REV_4X	240	24	Y	Y	[3]
SCH1_REV_8X	241	24	Y	Y	[3]
SCH1_REV_16X	242	24	Y	Y	[3]
SCH1_REV_LTU	243	24	Y	Y	[3]
SCH1_REV_LTUOK	244	N/A	N/A	N/A	[3]
SCH0_FOR_1X	245	24	Y	Y	[3]
SCH0_FOR_2X	246	24	Y	Y	[3]
SCH0_FOR_4X	247	24	Y	Y	[3]
SCH0_FOR_8X	248	24	Y	Y	[3]
SCH0_FOR_16X	249	24	Y	Y	[3]
SCH0_FOR_LTU	250	24	Y	Y	[3]
SCH0_FOR_LTUOK	251	24	Y	Y	[3]
SCH1_FOR_1X	252	24	Y	Y	[3]
SCH1_FOR_2X	253	24	Y	Y	[3]
SCH1_FOR_4X	254	24	Y	Y	[3]
SCH1_FOR_8X	255	24	Y	Y	[3]
SCH1_FOR_16X	256	24	Y	Y	[3]
SCH1_FOR_LTU	257	24	Y	Y	[3]
SCH1_FOR_LTUOK	258	24	Y	Y	[3]
BCCH_1	259	24	Y	Y	[4]
BCCH_2	260	24	Y	Y	[4]
BCCH_3	261	24	Y	Y	[4]
BCCH_4	262	24	Y	Y	[4]
BCCH_5	263	16	Y	Y	2.4
FCCCH_1	264	24	Y	Y	[4]
FCCCH_2	265	24	Y	Y	[4]
FCCCH_3	266	16	Y	Y	[4]
FCCCH_4	267	16	Y	Y	2.4

Table E-1. Retrievable and Settable Parameters					
Parameter Identifier	**Value of PARA-METER_ID (decimal)**	**Length (bits) (PARA-METER_LEN is Length - 1)**	**Support Required? (Y or N)**	**Settable Parameter? (Y or N)**	**Reference**
MUX_FLEX_RFCH_1	268	24	N	Y	[3]
MUX_FLEX_RFCH_2	269	24	N	Y	[3]
MUX_FLEX_RFCH_3	270	24	N	Y	[3]
MUX_FLEX_RFCH_4	271	24	N	Y	[3]
MUX_FLEX_RFCH_5	272	24	N	Y	[3]
MUX_FLEX_RFCH_6	273	24	N	Y	[3]
MUX_FLEX_RFCH_7	274	24	N	Y	[3]
MUX_FLEX_RFCH_8	275	24	N	Y	[3]
MUX_FLEX_RFCH_9	276	24	N	Y	[3]
MUX_FLEX_RFCH_10	277	24	N	Y	[3]
MUX_FLEX_RFCH_11	278	24	N	Y	[3]
MUX_FLEX_RFCH_12	279	24	N	Y	[3]
MUX_FLEX_RFCH_13	280	24	N	Y	[3]
MUX_FLEX_RFCH_14	281	24	N	Y	[3]
MUX_FLEX_RFCH_15	282	24	N	Y	[3]
MUX_FLEX_RFCH_16	283	24	N	Y	[3]
MUX_FLEX_RFCH_17	284	24	N	Y	[3]
MUX_FLEX_RFCH_18	285	24	N	Y	[3]
MUX_FLEX_RFCH_19	286	24	N	Y	[3]
MUX_FLEX_RFCH_20	287	24	N	Y	[3]
MUX_FLEX_RFCH_21	288	24	N	Y	[3]
MUX_FLEX_RFCH_22	289	24	N	Y	[3]
MUX_FLEX_RFCH_23	290	24	N	Y	[3]
MUX_FLEX_RFCH_24	291	24	N	Y	[3]
MUX_FLEX_RFCH_25	292	24	N	Y	[3]
MUX_FLEX_RFCH_26	293	24	N	Y	[3]
MUX_FLEX_RFCH_27	294	24	N	Y	[3]

Table E-1. Retrievable and Settable Parameters					
Parameter Identifier	**Value of PARA-METER_ID (decimal)**	**Length (bits) (PARA-METER_LEN is Length - 1)**	**Support Required? (Y or N)**	**Settable Parameter? (Y or N)**	**Reference**
MUX_FLEX_RFCH_28	295	24	N	Y	[3]
MUX_FLEX_RFCH_29	296	24	N	Y	[3]
MUX_FLEX_RFCH_30	297	24	N	Y	[3]
MUX_FLEX_RFCH_31	298	24	N	Y	[3]
MUX_FLEX_RFCH_32	299	24	N	Y	[3]
MUX_FLEX_RDCCH_1	300	24	N	Y	[3]
MUX_FLEX_RDCCH_2	301	24	N	Y	[3]
MUX_FLEX_RDCCH_3	302	24	N	Y	[3]
MUX_FLEX_RDCCH_4	303	24	N	Y	[3]
MUX_FLEX_RDCCH_5	304	24	N	Y	[3]
MUX_FLEX_RDCCH_6	305	24	N	Y	[3]
MUX_FLEX_RDCCH_7	306	24	N	Y	[3]
MUX_FLEX_RDCCH_8	307	24	N	Y	[3]
MUX_FLEX_RDCCH_9	308	24	N	Y	[3]
MUX_FLEX_RDCCH_10	309	24	N	Y	[3]
MUX_FLEX_RDCCH_11	310	24	N	Y	[3]
MUX_FLEX_RDCCH_12	311	24	N	Y	[3]
MUX_FLEX_RDCCH_13	312	24	N	Y	[3]
MUX_FLEX_RDCCH_14	313	24	N	Y	[3]
MUX_FLEX_RDCCH_15	314	24	N	Y	[3]
MUX_FLEX_RDCCH_16	315	24	N	Y	[3]
MUX_FLEX_RDCCH_17	316	24	N	Y	[3]
MUX_FLEX_RDCCH_18	317	24	N	Y	[3]
MUX_FLEX_RDCCH_19	318	24	N	Y	[3]
MUX_FLEX_RDCCH_20	319	24	N	Y	[3]
MUX_FLEX_RDCCH_21	320	24	N	Y	[3]

Table E-1. Retrievable and Settable Parameters					
Parameter Identifier	**Value of PARA-METER_ID (decimal)**	**Length (bits) (PARA-METER_LEN is Length - 1)**	**Support Required? (Y or N)**	**Settable Parameter? (Y or N)**	**Reference**
MUX_FLEX_RDCCH_22	321	24	N	Y	[3]
MUX_FLEX_RDCCH_23	322	24	N	Y	[3]
MUX_FLEX_RDCCH_24	323	24	N	Y	[3]
MUX_FLEX_RDCCH_25	324	24	N	Y	[3]
MUX_FLEX_RDCCH_26	325	24	N	Y	[3]
MUX_FLEX_RDCCH_27	326	24	N	Y	[3]
MUX_FLEX_RDCCH_28	327	24	N	Y	[3]
MUX_FLEX_RDCCH_29	328	24	N	Y	[3]
MUX_FLEX_RDCCH_30	329	24	N	Y	[3]
MUX_FLEX_RDCCH_31	330	24	N	Y	[3]
MUX_FLEX_RDCCH_32	331	24	N	Y	[3]
RSCH0_1	332	24	N	Y	[3]
RSCH0_2	333	24	N	Y	[3]
RSCH0_3	334	24	N	Y	[3]
RSCH0_4	335	24	N	Y	[3]
RSCH0_5	336	24	N	Y	[3]
RSCH0_6	337	24	N	Y	[3]
RSCH0_7	338	24	N	Y	[3]
RSCH0_8	339	24	N	Y	[3]
RSCH0_9	340	24	N	Y	[3]
RSCH0_10	341	24	N	Y	[3]
RSCH0_11	342	24	N	Y	[3]
RSCH0_12	343	24	N	Y	[3]
RSCH0_13	344	24	N	Y	[3]
RSCH0_14	345	24	N	Y	[3]
RSCH0_15	346	24	N	Y	[3]
RSCH0_16	347	24	N	Y	[3]
RSCH0_LTU	348	24	N	Y	[3]

Table E-1. Retrievable and Settable Parameters					
Parameter Identifier	**Value of PARA-METER_ID (decimal)**	**Length (bits) (PARA-METER_LEN is Length - 1)**	**Support Required? (Y or N)**	**Settable Parameter? (Y or N)**	**Reference**
RSCH1_1	349	24	N	Y	[3]
RSCH1_2	350	24	N	Y	[3]
RSCH1_3	351	24	N	Y	[3]
RSCH1_4	352	24	N	Y	[3]
RSCH1_5	353	24	N	Y	[3]
RSCH1_6	354	24	N	Y	[3]
RSCH1_7	355	24	N	Y	[3]
RSCH1_8	356	24	N	Y	[3]
RSCH1_9	357	24	N	Y	[3]
RSCH1_10	358	24	N	Y	[3]
RSCH1_11	359	24	N	Y	[3]
RSCH1_12	360	24	N	Y	[3]
RSCH1_13	361	24	N	Y	[3]
RSCH1_14	362	24	N	Y	[3]
RSCH1_15	363	24	N	Y	[3]
RSCH1_16	364	24	N	Y	[3]
RSCH1_LTU	365	24	N	Y	[3]

Table E-1. Retrievable and Settable Parameters					
Parameter Identifier	**Value of PARA-METER_ID (decimal)**	**Length (bits) (PARA-METER_LEN is Length - 1)**	**Support Required? (Y or N)**	**Settable Parameter? (Y or N)**	**Reference**
MUX_FLEX_FFCH_1	366	24	N	Y	[3]
MUX_FLEX_FFCH_2	367	24	N	Y	[3]
MUX_FLEX_FFCH_3	368	24	N	Y	[3]
MUX_FLEX_FFCH_4	369	24	N	Y	[3]
MUX_FLEX_FFCH_5	370	24	N	Y	[3]
MUX_FLEX_FFCH_6	371	24	N	Y	[3]
MUX_FLEX_FFCH_7	372	24	N	Y	[3]
MUX_FLEX_FFCH_8	373	24	N	Y	[3]
MUX_FLEX_FFCH_9	374	24	N	Y	[3]
MUX_FLEX_FFCH_10	375	24	N	Y	[3]
MUX_FLEX_FFCH_11	376	24	N	Y	[3]
MUX_FLEX_FFCH_12	377	24	N	Y	[3]
MUX_FLEX_FFCH_13	378	24	N	Y	[3]
MUX_FLEX_FFCH_14	379	24	N	Y	[3]
MUX_FLEX_FFCH_15	380	24	N	Y	[3]
MUX_FLEX_FFCH_16	381	24	N	Y	[3]
MUX_FLEX_FFCH_17	382	24	N	Y	[3]
MUX_FLEX_FFCH_18	383	24	N	Y	[3]
MUX_FLEX_FFCH_19	384	24	N	Y	[3]
MUX_FLEX_FFCH_20	385	24	N	Y	[3]
MUX_FLEX_FFCH_21	386	24	N	Y	[3]
MUX_FLEX_FFCH_22	387	24	N	Y	[3]
MUX_FLEX_FFCH_23	388	24	N	Y	[3]
MUX_FLEX_FFCH_24	389	24	N	Y	[3]
MUX_FLEX_FFCH_25	390	24	N	Y	[3]
MUX_FLEX_FFCH_26	391	24	N	Y	[3]

Table E-1. Retrievable and Settable Parameters					
Parameter Identifier	**Value of PARA-METER_ID (decimal)**	**Length (bits) (PARA-METER_LEN is Length - 1)**	**Support Required? (Y or N)**	**Settable Parameter? (Y or N)**	**Reference**
MUX_FLEX_FFCH_27	392	24	N	Y	[3]
MUX_FLEX_FFCH_28	393	24	N	Y	[3]
MUX_FLEX_FFCH_29	394	24	N	Y	[3]
MUX_FLEX_FFCH_30	395	24	N	Y	[3]
MUX_FLEX_FFCH_31	396	24	N	Y	[3]
MUX_FLEX_FFCH_32	397	24	N	Y	[3]
MUX_FLEX_FDCCH_1	398	24	N	Y	[3]
MUX_FLEX_FDCCH_2	399	24	N	Y	[3]
MUX_FLEX_FDCCH_3	400	24	N	Y	[3]
MUX_FLEX_FDCCH_4	401	24	N	Y	[3]
MUX_FLEX_FDCCH_5	402	24	N	Y	[3]
MUX_FLEX_FDCCH_6	403	24	N	Y	[3]
MUX_FLEX_FDCCH_7	404	24	N	Y	[3]
MUX_FLEX_FDCCH_8	405	24	N	Y	[3]
MUX_FLEX_FDCCH_9	406	24	N	Y	[3]
MUX_FLEX_FDCCH_10	407	24	N	Y	[3]
MUX_FLEX_FDCCH_11	408	24	N	Y	[3]
MUX_FLEX_FDCCH_12	409	24	N	Y	[3]
MUX_FLEX_FDCCH_13	410	24	N	Y	[3]
MUX_FLEX_FDCCH_14	411	24	N	Y	[3]
MUX_FLEX_FDCCH_15	412	24	N	Y	[3]
MUX_FLEX_FDCCH_16	413	24	N	Y	[3]
MUX_FLEX_FDCCH_17	414	24	N	Y	[3]
MUX_FLEX_FDCCH_18	415	24	N	Y	[3]
MUX_FLEX_FDCCH_19	416	24	N	Y	[3]
MUX_FLEX_FDCCH_20	417	24	N	Y	[3]

Table E-1. Retrievable and Settable Parameters					
Parameter Identifier	**Value of PARA-METER_ID (decimal)**	**Length (bits) (PARA-METER_LEN is Length - 1)**	**Support Required? (Y or N)**	**Settable Parameter? (Y or N)**	**Reference**
MUX_FLEX_FDCCH_21	418	24	N	Y	[3]
MUX_FLEX_FDCCH_22	419	24	N	Y	[3]
MUX_FLEX_FDCCH_23	420	24	N	Y	[3]
MUX_FLEX_FDCCH_24	421	24	N	Y	[3]
MUX_FLEX_FDCCH_25	422	24	N	Y	[3]
MUX_FLEX_FDCCH_26	423	24	N	Y	[3]
MUX_FLEX_FDCCH_27	424	24	N	Y	[3]
MUX_FLEX_FDCCH_28	425	24	N	Y	[3]
MUX_FLEX_FDCCH_29	426	24	N	Y	[3]
MUX_FLEX_FDCCH_30	427	24	N	Y	[3]
MUX_FLEX_FDCCH_31	428	24	N	Y	[3]
MUX_FLEX_FDCCH_32	429	24	N	Y	[3]
FSCH0_1	430	24	N	Y	[3]
FSCH0_2	431	24	N	Y	[3]
FSCH0_3	432	24	N	Y	[3]
FSCH0_4	433	24	N	Y	[3]
FSCH0_5	434	24	N	Y	[3]
FSCH0_6	435	24	N	Y	[3]
FSCH0_7	436	24	N	Y	[3]
FSCH0_8	437	24	N	Y	[3]
FSCH0_9	438	24	N	Y	[3]
FSCH0_10	439	24	N	Y	[3]
FSCH0_11	440	24	N	Y	[3]
FSCH0_12	441	24	N	Y	[3]
FSCH0_13	442	24	N	Y	[3]
FSCH0_14	443	24	N	Y	[3]

1

Table E-1. Retrievable and Settable Parameters					
Parameter Identifier	**Value of PARA-METER_ID (decimal)**	**Length (bits) (PARA-METER_LEN is Length - 1)**	**Support Required? (Y or N)**	**Settable Parameter? (Y or N)**	**Reference**
FSCH0_15	444	24	N	Y	[3]
FSCH0_16	445	24	N	Y	[3]
FSCH0_LTU	446	24	N	Y	[3]
FSCH0_LTUOK	447	24	N	Y	[3]
FSCH1_1	448	24	N	Y	[3]
FSCH1_2	449	24	N	Y	[3]
FSCH1_3	450	24	N	Y	[3]
FSCH1_4	451	24	N	Y	[3]
FSCH1_5	452	24	N	Y	[3]
FSCH1_6	453	24	N	Y	[3]
FSCH1_7	454	24	N	Y	[3]
FSCH1_8	455	24	N	Y	[3]
FSCH1_9	456	24	N	Y	[3]
FSCH1_10	457	24	N	Y	[3]
FSCH1_11	458	24	N	Y	[3]
FSCH1_12	459	24	N	Y	[3]
FSCH1_13	460	24	N	Y	[3]
FSCH1_14	461	24	N	Y	[3]
FSCH1_15	462	24	N	Y	[3]
FSCH1_16	463	24	N	Y	[3]
FSCH1_LTU	464	24	N	Y	[3]
FSCH1_LTUOK	465	24	N	Y	[3]
MUX_FLEX_RFCH_5_ms	466	24	N	Y	[3]
MUX_FLEX_FFCH_5_ms	467	24	N	Y	[3]
MUX_FLEX-_RDCCH_5_ms	468	24	N	Y	[3]
MUX_FLEX-_FDCCH_5_ms	469	24	N	Y	[3]

2

Table E-1. Retrievable and Settable Parameters					
Parameter Identifier	**Value of PARA-METER_ID (decimal)**	**Length (bits) (PARA-METER_LEN is Length - 1)**	**Support Required? (Y or N)**	**Settable Parameter? (Y or N)**	**Reference**
EACH_BA_1	470	16	Y	Y	[4]
EACH_BA_2	471	16	Y	Y	[4]
EACH_BA_3	472	16	Y	Y	[4]
EACH_BA_4	473	16	Y	Y	[4]
EACH_BA_5	474	16	Y	Y	[4]
EACH_BA_6	475	16	Y	Y	[4]
EACH_BA_7	476	16	Y	Y	[4]
EACH_BA_8	477	16	Y	Y	[4]
EACH_RA_3	478	16	Y	Y	[4]
EACH_RA_4	479	16	Y	Y	[4]
EACH_RA_5	480	16	Y	Y	[4]
EACH_RA_6	481	16	Y	Y	[4]
EACH_RA_7	482	16	Y	Y	[4]
EACH_RA_8	483	16	Y	Y	[4]
RCCCH_1	484	16	Y	Y	[4]
RCCCH_2	485	16	Y	Y	[4]
RCCCH_3	486	16	Y	Y	[4]
RCCCH_4	487	16	Y	Y	[4]
RCCCH_5	488	16	Y	Y	[4]
RCCCH_6	489	16	Y	Y	[4]
RCCCH_7	490	16	Y	Y	[4]
RCCCH_8	491	16	Y	Y	[4]
RCCCH_9	492	16	Y	Y	[4]
BCCH_6	493	24	Y	Y	[3]
BCCH_7	494	24	Y	Y	[3]
BCCH_8	495	24	Y	Y	[3]
BCCH_9	496	24	Y	Y	[3]
CACH_1	497	24	Y	Y	[3]
CACH_2	498	24	Y	Y	[3]

1

Table E-1. Retrievable and Settable Parameters					
Parameter Identifier	**Value of PARA-METER_ID (decimal)**	**Length (bits) (PARA-METER_LEN is Length - 1)**	**Support Required? (Y or N)**	**Settable Parameter? (Y or N)**	**Reference**
FCCCH_5	499	24	Y	Y	[3]
FCCCH_6	500	24	Y	Y	[3]
FCCCH_7	501	24	Y	Y	[3]
FCCCH_8	502	24	Y	Y	[3]
FCCCH_9	503	24	Y	Y	[3]
FCCCH_10	504	24	Y	Y	[3]
FCCCH_11	505	24	Y	Y	[3]
MUX1_FOR_FCH_17	506	24	Y	Y	[3]
MUX2_FOR_FCH_29	507	24	Y	Y	[3]
FPDCH0_ACK_0.5X	508	24	Y	Y	[3]
FPDCH0_ACK_1X	509	24	Y	Y	[3]
FPDCH0_ACK_2X	510	24	Y	Y	[3]
FPDCH0_ACK_4X	511	24	Y	Y	[3]
FPDCH0_ACK_6X	512	24	Y	Y	[3]
FPDCH0_ACK_8X	513	24	Y	Y	[3]
FPDCH0_ACK_10X	514	24	Y	Y	[3]
FPDCH1_ACK_0.5X	515	24	Y	Y	[3]
FPDCH1_ACK_1X	516	24	Y	Y	[3]
FPDCH1_ACK_2X	517	24	Y	Y	[3]
FPDCH1_ACK_4X	518	24	Y	Y	[3]
FPDCH1_ACK_6X	519	24	Y	Y	[3]
FPDCH1_ACK_8X	520	24	Y	Y	[3]
FPDCH1_ACK_10X	521	24	Y	Y	[3]
FPDCH0_NAK_0.5X	522	24	Y	Y	[3]
FPDCH0_NAK_1X	523	24	Y	Y	[3]
FPDCH0_NAK_2X	524	24	Y	Y	[3]
FPDCH0_NAK_4X	525	24	Y	Y	[3]

2

Table E-1. Retrievable and Settable Parameters					
Parameter Identifier	**Value of PARA-METER_ID (decimal)**	**Length (bits) (PARA-METER_LEN is Length - 1)**	**Support Required? (Y or N)**	**Settable Parameter? (Y or N)**	**Reference**
FPDCH0_NAK_6X	526	24	Y	Y	[3]
FPDCH0_NAK_8X	527	24	Y	Y	[3]
FPDCH0_NAK_10X	528	24	Y	Y	[3]
FPDCH1_NAK_0.5X	529	24	Y	Y	[3]
FPDCH1_NAK_1X	530	24	Y	Y	[3]
FPDCH1_NAK_2X	531	24	Y	Y	[3]
FPDCH1_NAK_4X	532	24	Y	Y	[3]
FPDCH1_NAK_6X	533	24	Y	Y	[3]
FPDCH1_NAK_8X	534	24	Y	Y	[3]
FPDCH1_NAK_10X	535	24	Y	Y	[3]
FPDCCH0_TOTAL_ACKS	536	24	Y	Y	[3]
FPDCCH0_TOTAL_NAKS	537	24	Y	Y	[3]
FPDCCH1_TOTAL_ACKS	538	24	Y	Y	[3]
FPDCCH1_TOTAL_NAKS	539	24	Y	Y	[3]
FPDCCH0_CNTL_MSG _ACKS	540	24	Y	Y	[3]
FPDCCH1_CNTL_MSG _ACKS	541	24	Y	Y	[3]
FSCH_ID_0_BSR_ID_0	542	N/A	N/A	N/A	[3]
FSCH_ID_0_BSR_ID_1	543	24	Y	Y	[3]
FSCH_ID_0_BSR_ID_2	544	24	Y	Y	[3]
FSCH_ID_0_BSR_ID_3	545	24	Y	Y	[3]
FSCH_ID_0_BSR_ID_4	546	24	Y	Y	[3]
FSCH_ID_0_BSR_ID_5	547	24	Y	Y	[3]
FSCH_ID_0_BSR_ID_6	548	24	Y	Y	[3]
FSCH_ID_0_BSR_ID_7	549	N/A	N/A	N/A	[3]
FSCH_ID_1_BSR_ID_0	550	N/A	N/A	N/A	[3]
FSCH_ID_1_BSR_ID_1	551	24	Y	Y	[3]

Table E-1. Retrievable and Settable Parameters					
Parameter Identifier	**Value of PARA-METER_ID (decimal)**	**Length (bits) (PARA-METER_LEN is Length - 1)**	**Support Required? (Y or N)**	**Settable Parameter? (Y or N)**	**Reference**
FSCH_ID_1_BSR_ID_2	552	24	Y	Y	[3]
FSCH_ID_1_BSR_ID_3	553	24	Y	Y	[3]
FSCH_ID_1_BSR_ID_4	554	24	Y	Y	[3]
FSCH_ID_1_BSR_ID_5	555	24	Y	Y	[3]
FSCH_ID_1_BSR_ID_6	556	24	Y	Y	[3]
FSCH_ID_1_BSR_ID_7	557	N/A	N/A	N/A	[3]
FSCH_ID_2_BSR_ID_0	558	N/A	N/A	N/A	[3]
FSCH_ID_2_BSR_ID_1	559	24	Y	Y	[3]
FSCH_ID_2_BSR_ID_2	560	24	Y	Y	[3]
FSCH_ID_2_BSR_ID_3	561	24	Y	Y	[3]
FSCH_ID_2_BSR_ID_4	562	24	Y	Y	[3]
FSCH_ID_2_BSR_ID_5	563	24	Y	Y	[3]
FSCH_ID_2_BSR_ID_6	564	24	Y	Y	[3]
FSCH_ID_2_BSR_ID_7	565	N/A	N/A	N/A	[3]
FSCH_ID_3_BSR_ID_0	566	N/A	N/A	N/A	[3]
FSCH_ID_3_BSR_ID_1	567	24	Y	Y	[3]
FSCH_ID_3_BSR_ID_2	568	24	Y	Y	[3]
FSCH_ID_3_BSR_ID_3	569	24	Y	Y	[3]
FSCH_ID_3_BSR_ID_4	570	24	Y	Y	[3]
FSCH_ID_3_BSR_ID_5	571	24	Y	Y	[3]
FSCH_ID_3_BSR_ID_6	572	24	Y	Y	[3]
FSCH_ID_3_BSR_ID_7	573	N/A	N/A	N/A	[3]
FSCH_ID_4_BSR_ID_0	574	N/A	N/A	N/A	[3]
FSCH_ID_4_BSR_ID_1	575	24	Y	Y	[3]
FSCH_ID_4_BSR_ID_2	576	24	Y	Y	[3]
FSCH_ID_4_BSR_ID_3	577	24	Y	Y	[3]
FSCH_ID_4_BSR_ID_4	578	24	Y	Y	[3]
FSCH_ID_4_BSR_ID_5	579	24	Y	Y	[3]

Table E-1. Retrievable and Settable Parameters					
Parameter Identifier	**Value of PARA-METER_ID (decimal)**	**Length (bits) (PARA-METER_LEN is Length - 1)**	**Support Required? (Y or N)**	**Settable Parameter? (Y or N)**	**Reference**
FSCH_ID_4_BSR_ID_6	580	24	Y	Y	[3]
FSCH_ID_4_BSR_ID_7	581	N/A	N/A	N/A	[3]
FSCH_ID_5_BSR_ID_0	582	N/A	N/A	N/A	[3]
FSCH_ID_5_BSR_ID_1	583	24	Y	Y	[3]
FSCH_ID_5_BSR_ID_2	584	24	Y	Y	[3]
FSCH_ID_5_BSR_ID_3	585	24	Y	Y	[3]
FSCH_ID_5_BSR_ID_4	586	24	Y	Y	[3]
FSCH_ID_5_BSR_ID_5	587	24	Y	Y	[3]
FSCH_ID_5_BSR_ID_6	588	24	Y	Y	[3]
FSCH_ID_5_BSR_ID_7	589	N/A	N/A	N/A	[3]
FSCH_ID_6_BSR_ID_0	590	N/A	N/A	N/A	[3]
FSCH_ID_6_BSR_ID_1	591	24	Y	Y	[3]
FSCH_ID_6_BSR_ID_2	592	24	Y	Y	[3]
FSCH_ID_6_BSR_ID_3	593	24	Y	Y	[3]
FSCH_ID_6_BSR_ID_4	594	24	Y	Y	[3]
FSCH_ID_6_BSR_ID_5	595	24	Y	Y	[3]
FSCH_ID_6_BSR_ID_6	596	24	Y	Y	[3]
FSCH_ID_6_BSR_ID_7	597	N/A	N/A	N/A	[3]
FSCH_ID_7_BSR_ID_0	598	N/A	N/A	N/A	[3]
FSCH_ID_7_BSR_ID_1	599	24	Y	Y	[3]
FSCH_ID_7_BSR_ID_2	600	24	Y	Y	[3]
FSCH_ID_7_BSR_ID_3	601	24	Y	Y	[3]
FSCH_ID_7_BSR_ID_4	602	24	Y	Y	[3]
FSCH_ID_7_BSR_ID_5	603	24	Y	Y	[3]
FSCH_ID_7_BSR_ID_6	604	24	Y	Y	[3]
FSCH_ID_7_BSR_ID_7	605	N/A	N/A	N/A	[3]

Table E-1. Retrievable and Settable Parameters					
Parameter Identifier	**Value of PARA-METER_ID (decimal)**	**Length (bits) (PARA-METER_LEN is Length - 1)**	**Support Required ? (Y or N)**	**Settable Parameter ? (Y or N)**	**Reference**
RPDCH_174_0	606	24	Y	Y	[3]
RPDCH_174_1	607	24	Y	Y	[3]
RPDCH_174_2	608	24	Y	Y	[3]
RPDCH_174_NAK	609	24	Y	Y	[3]
RPDCH_1X_0	610	24	Y	Y	[3]
RPDCH_1X_1	611	24	Y	Y	[3]
RPDCH_1X_2	612	24	Y	Y	[3]
RPDCH_1X_NAK	613	24	Y	Y	[3]
RPDCH_2X_0	614	24	Y	Y	[3]
RPDCH_2X_1	615	24	Y	Y	[3]
RPDCH_2X_2	616	24	Y	Y	[3]
RPDCH_2X_NAK	617	24	Y	Y	[3]
RPDCH_4X_0	618	24	Y	Y	[3]
RPDCH_4X_1	619	24	Y	Y	[3]
RPDCH_4X_2	620	24	Y	Y	[3]
RPDCH_4X_NAK	621	24	Y	Y	[3]
RPDCH_8X_0	622	24	Y	Y	[3]
RPDCH_8X_1	623	24	Y	Y	[3]
RPDCH_8X_2	624	24	Y	Y	[3]
RPDCH_8X_NAK	625	24	Y	Y	[3]
RPDCH_12X_0	626	24	Y	Y	[3]
RPDCH_12X_1	627	24	Y	Y	[3]
RPDCH_12X_2	628	24	Y	Y	[3]
RPDCH_12X_NAK	629	24	Y	Y	[3]
RPDCH_16X_0	630	24	Y	Y	[3]
RPDCH_16X_1	631	24	Y	Y	[3]
RPDCH_16X_2	632	24	Y	Y	[3]
RPDCH_16X_NAK	633	24	Y	Y	[3]
RPDCH_24X_0	634	24	Y	Y	[3]
RPDCH_24X_1	635	24	Y	Y	[3]
RPDCH_24X_2	636	24	Y	Y	[3]
RPDCH_24X_NAK	637	24	Y	Y	[3]

Table E-1. Retrievable and Settable Parameters					
Parameter Identifier	**Value of PARA-METER_ID (decimal)**	**Length (bits) (PARA-METER_LEN is Length - 1)**	**Support Required ? (Y or N)**	**Settable Parameter ? (Y or N)**	**Reference**
RPDCH_32X_0	638	24	Y	Y	[3]
RPDCH_32X_1	639	24	Y	Y	[3]
RPDCH_32X_2	640	24	Y	Y	[3]
RPDCH_32X_NAK	641	24	Y	Y	[3]
RPDCH_40X_0	642	24	Y	Y	[3]
RPDCH_40X_1	643	24	Y	Y	[3]
RPDCH_40X_2	644	24	Y	Y	[3]
RPDCH_40X_NAK	645	24	Y	Y	[3]
RPDCH_48X_0	646	24	Y	Y	[3]
RPDCH_48X_1	647	24	Y	Y	[3]
RPDCH_48X_2	648	24	Y	Y	[3]
RPDCH_48X_NAK	649	24	Y	Y	[3]
RPDCH_TOTAL_174	650	24	Y	Y	[3]
RPDCH_TOTAL_1X	651	24	Y	Y	[3]
RPDCH_TOTAL_2X	652	24	Y	Y	[3]
RPDCH_TOTAL_4X	653	24	Y	Y	[3]
RPDCH_TOTAL_8X	654	24	Y	Y	[3]
RPDCH_TOTAL_12X	655	24	Y	Y	[3]
RPDCH_TOTAL_16X	656	24	Y	Y	[3]
RPDCH_TOTAL_24X	657	24	Y	Y	[3]
RPDCH_TOTAL_32X	658	24	Y	Y	[3]
RPDCH_TOTAL_40X	659	24	Y	Y	[3]
RPDCH_TOTAL_48X	660	24	Y	Y	[3]
PCG_0_FOR_FCH_1	661	24	Y	Y	[3]
PCG_0_FOR_FCH_2	662	24	Y	Y	[3]
PCG_0_FOR_FCH_3	663	24	Y	Y	[3]
PCG_0_FOR_FCH_4	664	24	Y	Y	[3]
PCG_1_FOR_FCH_1	665	24	Y	Y	[3]
PCG_1_FOR_FCH_2	666	24	Y	Y	[3]

Table E-1. Retrievable and Settable Parameters					
Parameter Identifier	**Value of PARA-METER_ID (decimal)**	**Length (bits) (PARA-METER_LEN is Length - 1)**	**Support Required ? (Y or N)**	**Settable Parameter ? (Y or N)**	**Reference**
PCG_1_FOR_FCH_3	667	24	Y	Y	[3]
PCG_1_FOR_FCH_4	668	24	Y	Y	[3]
PCG_2_FOR_FCH_1	669	24	Y	Y	[3]
PCG_2_FOR_FCH_2	670	24	Y	Y	[3]
PCG_2_FOR_FCH_3	671	24	Y	Y	[3]
PCG_2_FOR_FCH_4	672	24	Y	Y	[3]
PCG_3_FOR_FCH_1	673	24	Y	Y	[3]
PCG_3_FOR_FCH_2	674	24	Y	Y	[3]
PCG_3_FOR_FCH_3	675	24	Y	Y	[3]
PCG_3_FOR_FCH_4	676	24	Y	Y	[3]
PCG_4_FOR_FCH_1	677	24	Y	Y	[3]
PCG_4_FOR_FCH_2	678	24	Y	Y	[3]
PCG_4_FOR_FCH_3	679	24	Y	Y	[3]
PCG_4_FOR_FCH_4	680	24	Y	Y	[3]
PCG_5_FOR_FCH_1	681	24	Y	Y	[3]
PCG_5_FOR_FCH_2	682	24	Y	Y	[3]
PCG_5_FOR_FCH_3	683	24	Y	Y	[3]
PCG_5_FOR_FCH_4	684	24	Y	Y	[3]
PCG_6_FOR_FCH_1	685	24	Y	Y	[3]
PCG_6_FOR_FCH_2	686	24	Y	Y	[3]
PCG_6_FOR_FCH_3	687	24	Y	Y	[3]
PCG_6_FOR_FCH_4	688	24	Y	Y	[3]
PCG_7_FOR_FCH_1	689	24	Y	Y	[3]
PCG_7_FOR_FCH_2	690	24	Y	Y	[3]
PCG_7_FOR_FCH_3	691	24	Y	Y	[3]
PCG_7_FOR_FCH_4	692	24	Y	Y	[3]
PCG_8_FOR_FCH_1	693	24	Y	Y	[3]
PCG_8_FOR_FCH_2	694	24	Y	Y	[3]
PCG_8_FOR_FCH_3	695	24	Y	Y	[3]

Table E-1. Retrievable and Settable Parameters					
Parameter Identifier	**Value of PARA-METER_ID (decimal)**	**Length (bits) (PARA-METER_LEN is Length - 1)**	**Support Required ? (Y or N)**	**Settable Parameter ? (Y or N)**	**Reference**
PCG_8_FOR_FCH_4	696	24	Y	Y	[3]
PCG_9_FOR_FCH_1	697	24	Y	Y	[3]
PCG_9_FOR_FCH_2	698	24	Y	Y	[3]
PCG_9_FOR_FCH_3	699	24	Y	Y	[3]
PCG_9_FOR_FCH_4	700	24	Y	Y	[3]
PCG_10_FOR_FCH_1	701	24	Y	Y	[3]
PCG_10_FOR_FCH_2	702	24	Y	Y	[3]
PCG_10_FOR_FCH_3	703	24	Y	Y	[3]
PCG_10_FOR_FCH_4	704	24	Y	Y	[3]
PCG_11_FOR_FCH_1	705	24	Y	Y	[3]
PCG_11_FOR_FCH_2	706	24	Y	Y	[3]
PCG_11_FOR_FCH_3	707	24	Y	Y	[3]
PCG_11_FOR_FCH_4	708	24	Y	Y	[3]
PCG_12_FOR_FCH_1	709	24	Y	Y	[3]
PCG_12_FOR_FCH_2	710	24	Y	Y	[3]
PCG_12_FOR_FCH_3	711	24	Y	Y	[3]
PCG_12_FOR_FCH_4	712	24	Y	Y	[3]
PCG_13_FOR_FCH_1	713	24	Y	Y	[3]
PCG_13_FOR_FCH_2	714	24	Y	Y	[3]
PCG_13_FOR_FCH_3	715	24	Y	Y	[3]
PCG_13_FOR_FCH_4	716	24	Y	Y	[3]
PCG_14_FOR_FCH_1	717	24	Y	Y	[3]
PCG_14_FOR_FCH_2	718	24	Y	Y	[3]
PCG_14_FOR_FCH_3	719	24	Y	Y	[3]
PCG_14_FOR_FCH_4	720	24	Y	Y	[3]
PCG_15_FOR_FCH_1	721	24	Y	Y	[3]
PCG_15_FOR_FCH_2	722	24	Y	Y	[3]
PCG_15_FOR_FCH_3	723	24	Y	Y	[3]
PCG_15_FOR_FCH_4	724	24	Y	Y	[3]

Table E-1. Retrievable and Settable Parameters					
Parameter Identifier	**Value of PARA-METER_ID (decimal)**	**Length (bits) (PARA-METER_LEN is Length - 1)**	**Support Required ? (Y or N)**	**Settable Parameter ? (Y or N)**	**Reference**
PCG_0_FOR_SCH_1	725	24	Y	Y	[3]
PCG_0_FOR_SCH_2	726	24	Y	Y	[3]
PCG_0_FOR_SCH_3	727	24	Y	Y	[3]
PCG_0_FOR_SCH_4	728	24	Y	Y	[3]
PCG_0_FOR_SCH_5	729	24	Y	Y	[3]
PCG_1_FOR_SCH_1	730	24	Y	Y	[3]
PCG_1_FOR_SCH_2	731	24	Y	Y	[3]
PCG_1_FOR_SCH_3	732	24	Y	Y	[3]
PCG_1_FOR_SCH_4	733	24	Y	Y	[3]
PCG_1_FOR_SCH_5	734	24	Y	Y	[3]
PCG_2_FOR_SCH_1	735	24	Y	Y	[3]
PCG_2_FOR_SCH_2	736	24	Y	Y	[3]
PCG_2_FOR_SCH_3	737	24	Y	Y	[3]
PCG_2_FOR_SCH_4	738	24	Y	Y	[3]
PCG_2_FOR_SCH_5	739	24	Y	Y	[3]
PCG_3_FOR_SCH_1	740	24	Y	Y	[3]
PCG_3_FOR_SCH_2	741	24	Y	Y	[3]
PCG_3_FOR_SCH_3	742	24	Y	Y	[3]
PCG_3_FOR_SCH_4	743	24	Y	Y	[3]
PCG_3_FOR_SCH_5	744	24	Y	Y	[3]
PCG_4_FOR_SCH_1	745	24	Y	Y	[3]
PCG_4_FOR_SCH_2	746	24	Y	Y	[3]
PCG_4_FOR_SCH_3	747	24	Y	Y	[3]
PCG_4_FOR_SCH_4	748	24	Y	Y	[3]
PCG_4_FOR_SCH_5	749	24	Y	Y	[3]
PCG_5_FOR_SCH_1	750	24	Y	Y	[3]
PCG_5_FOR_SCH_2	751	24	Y	Y	[3]
PCG_5_FOR_SCH_3	752	24	Y	Y	[3]
PCG_5_FOR_SCH_4	753	24	Y	Y	[3]

Table E-1. Retrievable and Settable Parameters					
Parameter Identifier	**Value of PARA-METER_ID (decimal)**	**Length (bits) (PARA-METER_LEN is Length - 1)**	**Support Required ? (Y or N)**	**Settable Parameter ? (Y or N)**	**Reference**
PCG_5_FOR_SCH_5	754	24	Y	Y	[3]
PCG_6_FOR_SCH_1	755	24	Y	Y	[3]
PCG_6_FOR_SCH_2	756	24	Y	Y	[3]
PCG_6_FOR_SCH_3	757	24	Y	Y	[3]
PCG_6_FOR_SCH_4	758	24	Y	Y	[3]
PCG_6_FOR_SCH_5	759	24	Y	Y	[3]
PCG_7_FOR_SCH_1	760	24	Y	Y	[3]
PCG_7_FOR_SCH_2	761	24	Y	Y	[3]
PCG_7_FOR_SCH_3	762	24	Y	Y	[3]
PCG_7_FOR_SCH_4	763	24	Y	Y	[3]
PCG_7_FOR_SCH_5	763	24	Y	Y	[3]
PCG_8_FOR_SCH_1	764	24	Y	Y	[3]
PCG_8_FOR_SCH_2	765	24	Y	Y	[3]
PCG_8_FOR_SCH_3	766	24	Y	Y	[3]
PCG_8_FOR_SCH_4	767	24	Y	Y	[3]
PCG_8_FOR_SCH_5	768	24	Y	Y	[3]
PCG_9_FOR_SCH_1	769	24	Y	Y	[3]
PCG_9_FOR_SCH_2	770	24	Y	Y	[3]
PCG_9_FOR_SCH_3	772	24	Y	Y	[3]
PCG_9_FOR_SCH_4	773	24	Y	Y	[3]
PCG_9_FOR_SCH_5	774	24	Y	Y	[3]
PCG_10_FOR_SCH_1	775	24	Y	Y	[3]
PCG_10_FOR_SCH_2	776	24	Y	Y	[3]
PCG_10_FOR_SCH_3	777	24	Y	Y	[3]
PCG_10_FOR_SCH_4	778	24	Y	Y	[3]
PCG_10_FOR_SCH_5	779	24	Y	Y	[3]
PCG_11_FOR_SCH_1	780	24	Y	Y	[3]
PCG_11_FOR_SCH_2	781	24	Y	Y	[3]
PCG_11_FOR_SCH_3	782	24	Y	Y	[3]

Table E-1. Retrievable and Settable Parameters					
Parameter Identifier	**Value of PARA-METER_ID (decimal)**	**Length (bits) (PARA-METER_LEN is Length - 1)**	**Support Required ? (Y or N)**	**Settable Parameter ? (Y or N)**	**Reference**
PCG_11_FOR_SCH_4	783	24	Y	Y	[3]
PCG_11_FOR_SCH_5	784	24	Y	Y	[3]
PCG_12_FOR_SCH_1	785	24	Y	Y	[3]
PCG_12_FOR_SCH_2	786	24	Y	Y	[3]
PCG_12_FOR_SCH_3	787	24	Y	Y	[3]
PCG_12_FOR_SCH_4	788	24	Y	Y	[3]
PCG_12_FOR_SCH_5	789	24	Y	Y	[3]
PCG_13_FOR_SCH_1	790	24	Y	Y	[3]
PCG_13_FOR_SCH_2	791	24	Y	Y	[3]
PCG_13_FOR_SCH_3	792	24	Y	Y	[3]
PCG_13_FOR_SCH_4	793	24	Y	Y	[3]
PCG_13_FOR_SCH_5	794	24	Y	Y	[3]
PCG_14_FOR_SCH_1	795	24	Y	Y	[3]
PCG_14_FOR_SCH_2	796	24	Y	Y	[3]
PCG_14_FOR_SCH_3	797	24	Y	Y	[3]
PCG_14_FOR_SCH_4	798	24	Y	Y	[3]
PCG_14_FOR_SCH_5	799	24	Y	Y	[3]
PCG_15_FOR_SCH_1	800	24	Y	Y	[3]
PCG_15_FOR_SCH_2	801	24	Y	Y	[3]
PCG_15_FOR_SCH_3	802	24	Y	Y	[3]
PCG_15_FOR_SCH_4	803	24	Y	Y	[3]
PCG_15_FOR_SCH_5	804	24	Y	Y	[3]

This page intentionally left blank.

ANNEX F MOBILE STATION DATABASE

F.1 Introduction

This is an informative annex which lists the numeric indicators that are described by this document and stored in the mobile station's permanent or semi-permanent memory. Some of these indicators are required; other indicators are optional and are so noted.

The indicators are organized in this annex according to two categories:

- Mobile station indicators — These indicators are global to the mobile station and independent of the mobile station's NAMs.
- NAM indicators — These indicators specify parameters associated with the mobile station's NAM.

The description of each indicator below includes the indicator's name, the number of bits it contains, and the section in this document where it is defined. Permanent indicators are denoted by the "p" subscript; semi-permanent indicators are denoted by the "s-p" subscript.

F.2 Mobile Station Indicators

Mobile station indicators are organized into permanent mobile station indicators and semi-permanent mobile station indicators.

F.2.1 Permanent Mobile Station Indicators

Permanent mobile station indicators specify physical station configuration and attributes, independent of NAM. The indicators are listed in Table F.2.1-1.

Table F.2.1-1. Permanent Mobile Station Indicators

Indicator	Number of Bits	Where Defined	Notes
ESN_p	32	2.3.2.1	See 2.3.14 for special ESN storage and protection requirements. Includes $MOB\_MFG\_CODE_p$.
$MEID_p$	56	2.3.2.2	
$ACCOLC_p$	4	2.3.5	
SCM_p	8	2.3.3	
$SLOT\_CYCLE\_INDEX_p$	4	2.3.11	This is a signed integer that can take the values between -4 and +7 inclusive.
$MOB\_FIRM\_REV_p$	16	2.3.14	
MOB_MODEL_p	8	2.3.14	
$MOB\_MFG\_CODE_p$	8	2.3.14	
For each band class supported:			
$MOB\_P\_REV_p$	8	2.3.14	

F.2.2 Semi-permanent Mobile Station Indicators

Semi-permanent mobile station indicators are retained when the mobile station power is turned off. These indicators are associated with mobile station registration and lock. They are independent of the NAM in use. CDMA indicators are listed in Table F.2.2-1.

Table F.2.2-1. CDMA Semi-permanent Mobile Station Indicators

Indicator	Number of Bits	Where Defined	Notes
$ZONE\_LIST_{s\text{-}p}$		2.3.4	
$REG\_ZONE_{s\text{-}p}$	12	2.3.4	
$SID_{s\text{-}p}$	15	2.3.4	
$NID_{s\text{-}p}$	16	2.3.4	
$SID\_NID\_LIST_{s\text{-}p}$		2.3.4	
$SID_{s\text{-}p}$	15	2.3.4	
$NID_{s\text{-}p}$	16	2.3.4	
$BASE\_LAT\_REG_{s\text{-}p}$	22	2.3.4	
$BASE\_LONG\_REG_{s\text{-}p}$	23	2.3.4	
$REG\_DIST\_REG_{s\text{-}p}$	11	2.3.4	
$LCKRSN\_P_{s\text{-}p}$	4	2.3.13	
$MAINTRSN_{s\text{-}p}$	4	2.3.13	

F.3 NAM Indicators

Each mobile station contains one or more NAMs. Table F.3-1 lists the permanent and semi-permanent values associated with each NAM.

Table F.3-1. NAM Indicators (Part 1 of 2)

Indicator	Number of Bits	Where Defined	Notes
A_KEY	64	2.3.12.1.5	
SSD_A_{s-p}	64	2.3.12.1.1	Shared Secret Data A
SSD_B_{s-p}	64	2.3.12.1.1	Shared Secret Data B
$COUNT_{s-p}$	6	2.3.12.1.3	Call History Parameter
$IMSI\_M\_CLASS_p$	1	2.3.1	
$IMSI\_T\_CLASS_p$	1	2.3.1	
$IMSI\_M\_S_p$	34	2.3.1.1	Includes $IMSI\_M\_S1_p$ and $IMSI\_M\_S2_p$.
$IMSI\_T\_S_p$	34	2.3.1.1	Includes $IMSI\_T\_S1_p$ and $IMSI\_T\_S2_p$.
$IMSI\_M\_ADDR\_NUM_p$	3	2.3.1	Applies to IMSI_M.
$IMSI\_T\_ADDR\_NUM_p$	3	2.3.1	Applies to IMSI_T.
$IMSI\_M\_11\_12_p$	7	2.3.1.2	
$IMSI\_T\_11\_12_p$	7	2.3.1.1	
MCC_M_p	10	2.3.1.1	
MCC_T_p	10	2.3.1.1	
MDN_p	See Notes	2.3.1.4	An MDN consists of up to 15 digits based on manufacturer specific coding.
$ASSIGNING\_TMSI\_ZONE\_LEN_{s-p}$	4	23.15.2	
$ASSIGNING\_TMSI\_-ZONE_{s-p}$	64	2.3.15.2	
$TMSI\_CODE_{s-p}$	32	2.3.15.2	
$TMSI\_EXP\_TIME_{s-p}$	24	2.3.15.2	

Table F.3-1. NAM Indicators (Part 2 of 2)

Indicator	Number of Bits	Where Defined	Notes
SID_p	15	2.3.8	
NID_p	16	2.3.8	
$MOB\_TERM\_HOME_p$	1	2.3.8	
$MOB\_TERM\_FOR\_SID_p$	1	2.3.8	
$MOB\_TERM\_FOR\_NID_p$	1	2.3.8	
$IMSI\_10\_M_p$	4	2.3.1.1	
$IMSI\_10\_T_p$	4	2.3.1.1	

This page intentionally left blank

ANNEX G CDMA EXTENDED ENCRYPTION CALL FLOW EXAMPLES

This is an informative annex, which contains examples of extended encryption call flow. The diagrams follow these conventions:

- All messages are received without error
- Acknowledgments are not shown

For all the call flow diagrams, the following conventions hold:

- The following message acronyms are defined:

  RGM: Registration Message

  ORM: Origination Message

  CAM: Channel Assignment Message

  ECAM: Extended Channel Assignment Message

  SMCM: Security Mode Command Message

- The following short forms are defined:

  enc.k1: encrypt the message with key k1

  csch_enc_req: C_SIG_ENCRYPT_REQ

  dsch_enc_req: D_SIG_ENCRYPT_REQs

  csch_enc: C_SIG_ENCRYPT_MODE

  dsch_enc: D_SIG_ENCRYPT_MODE

  A <- B: assign value B to variable A

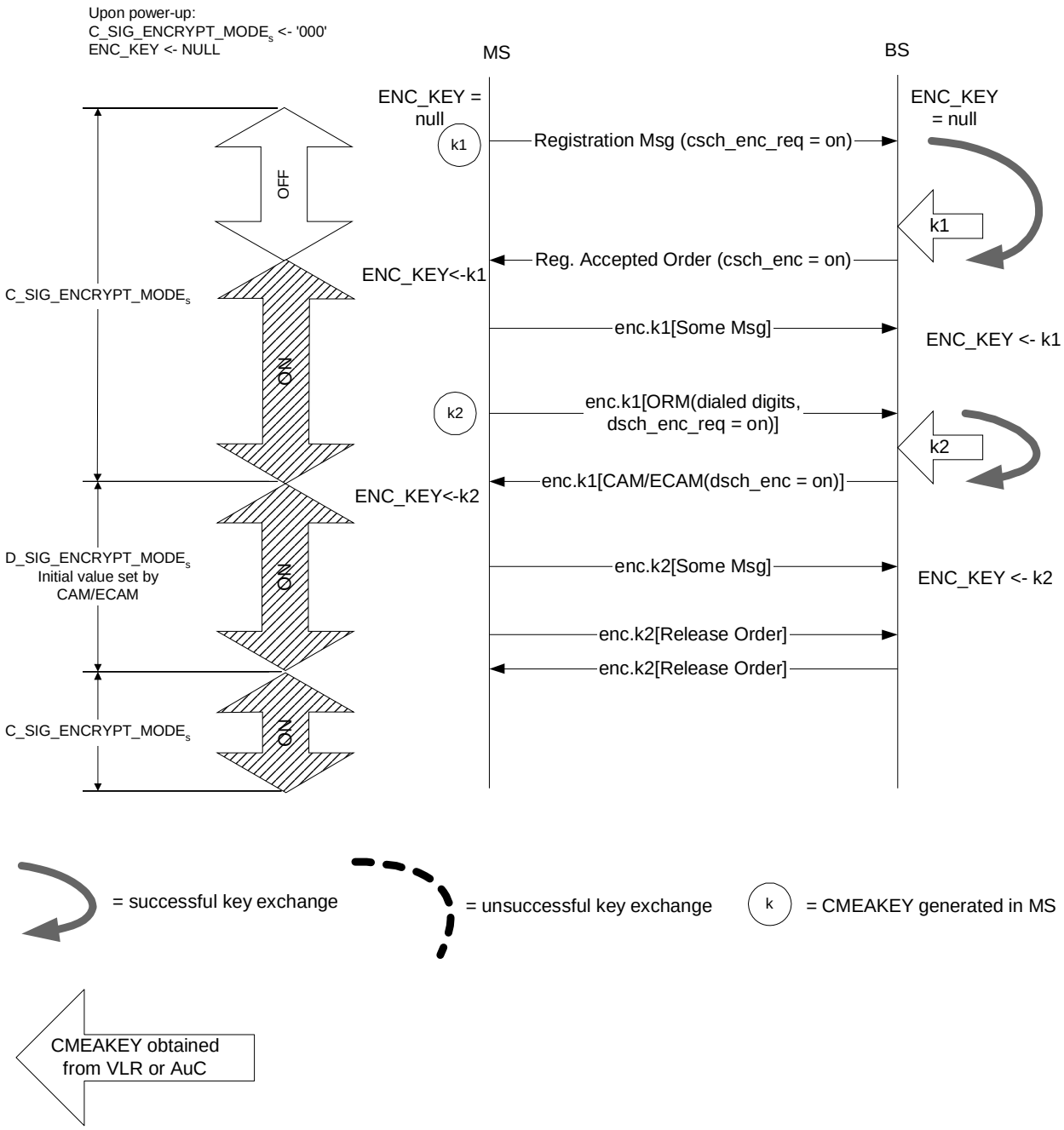

Figure G-1. Power-Up Registration, Origination, and Call Release (BS waits for the new CMEAKEY before sending CAM/ECAM)

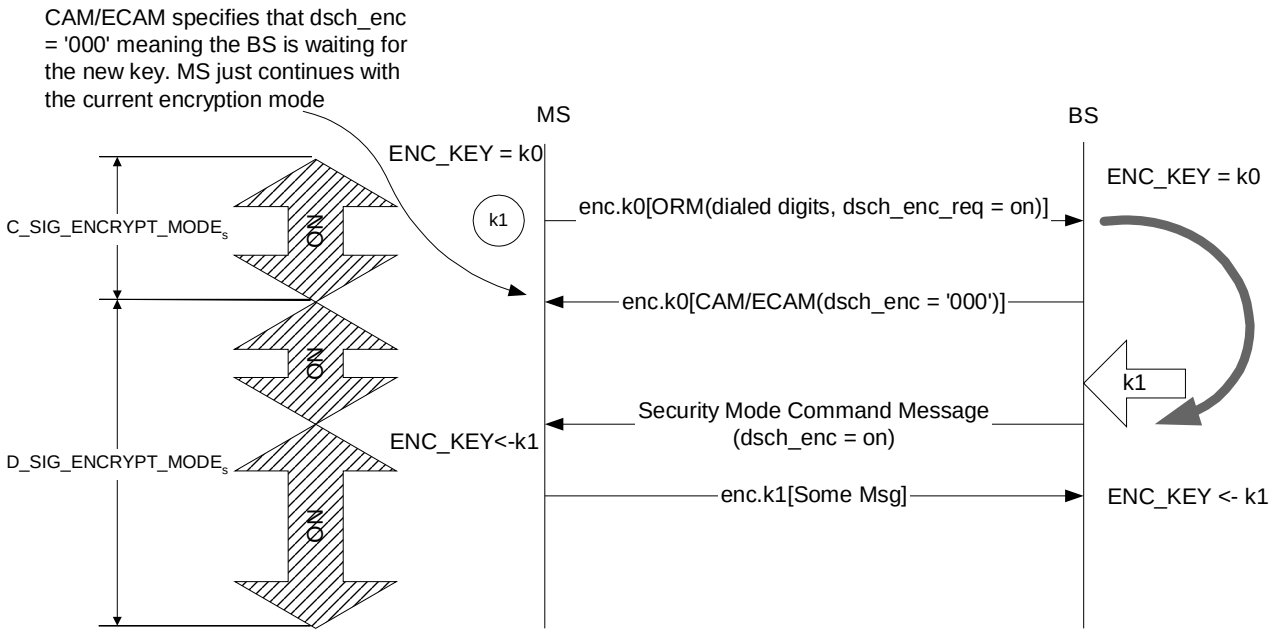

Figure G-2. Quick Channel Assignment (BS does not wait for the new key before sending CAM/ECAM)

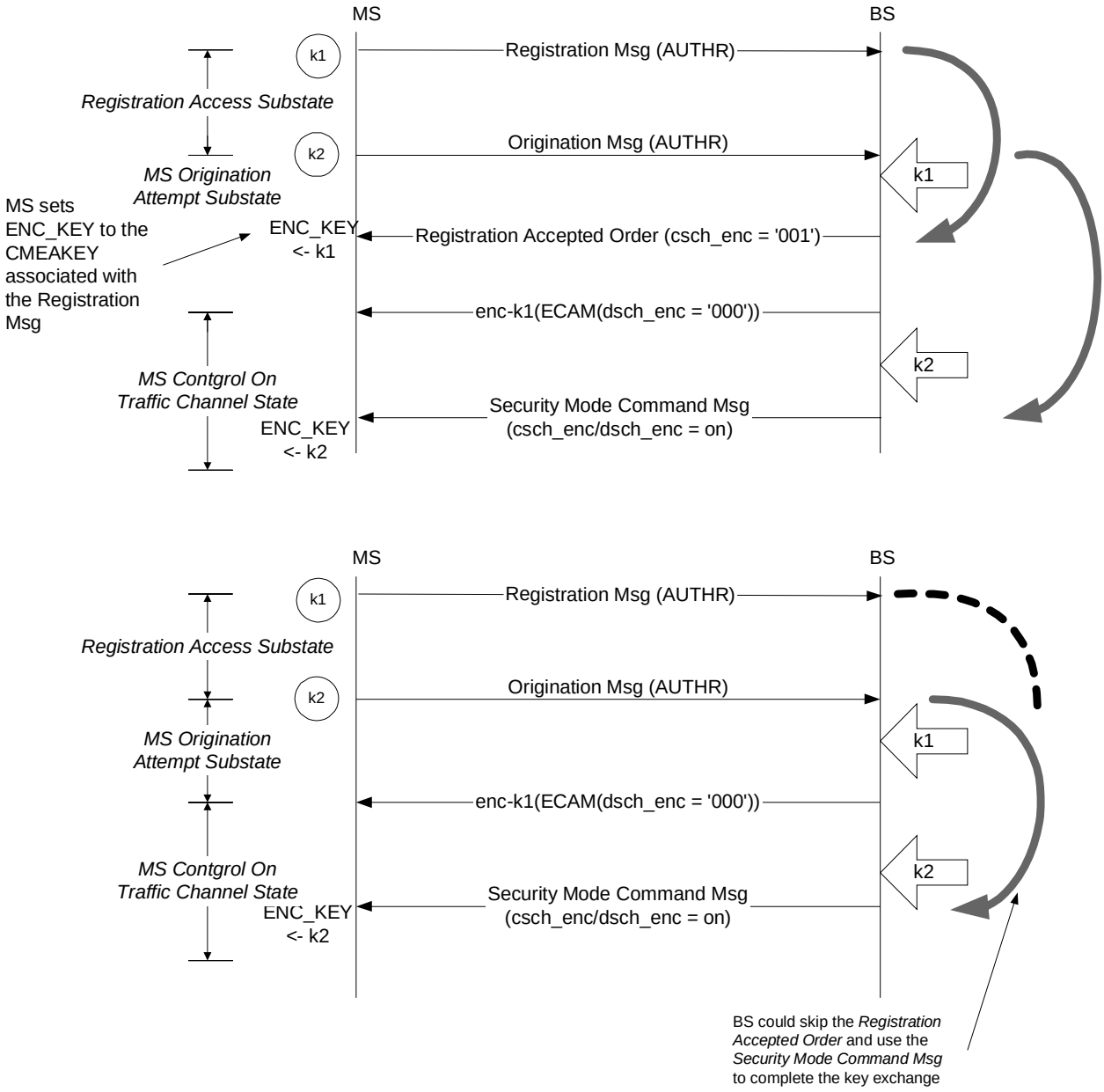

Figure G-3. MS Initiates Call Origination During the Registration Access Substate

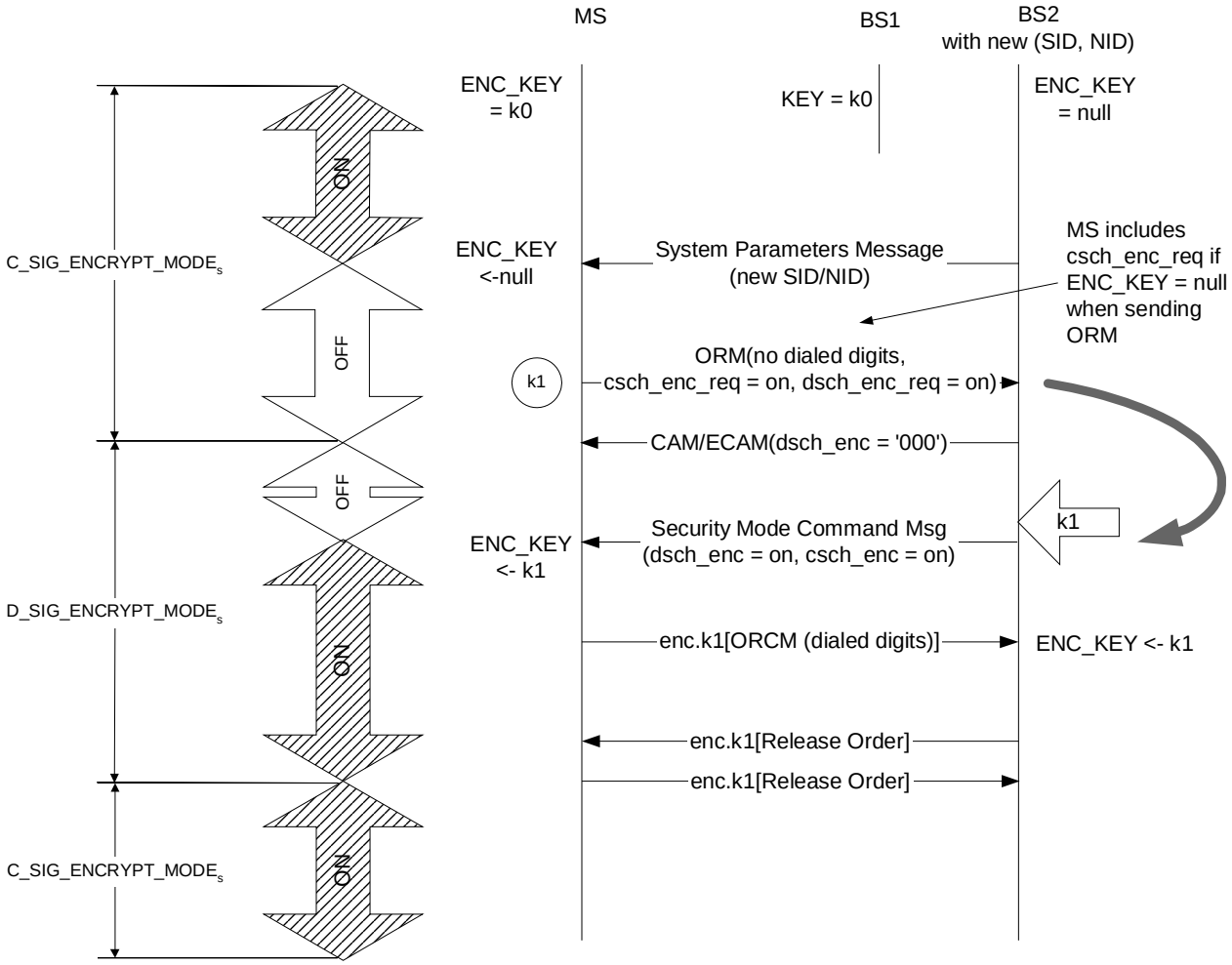

Figure G-4. Implicit Registration (MS crosses a SID/NID boundary during MS Idle State. MS originates before registering)

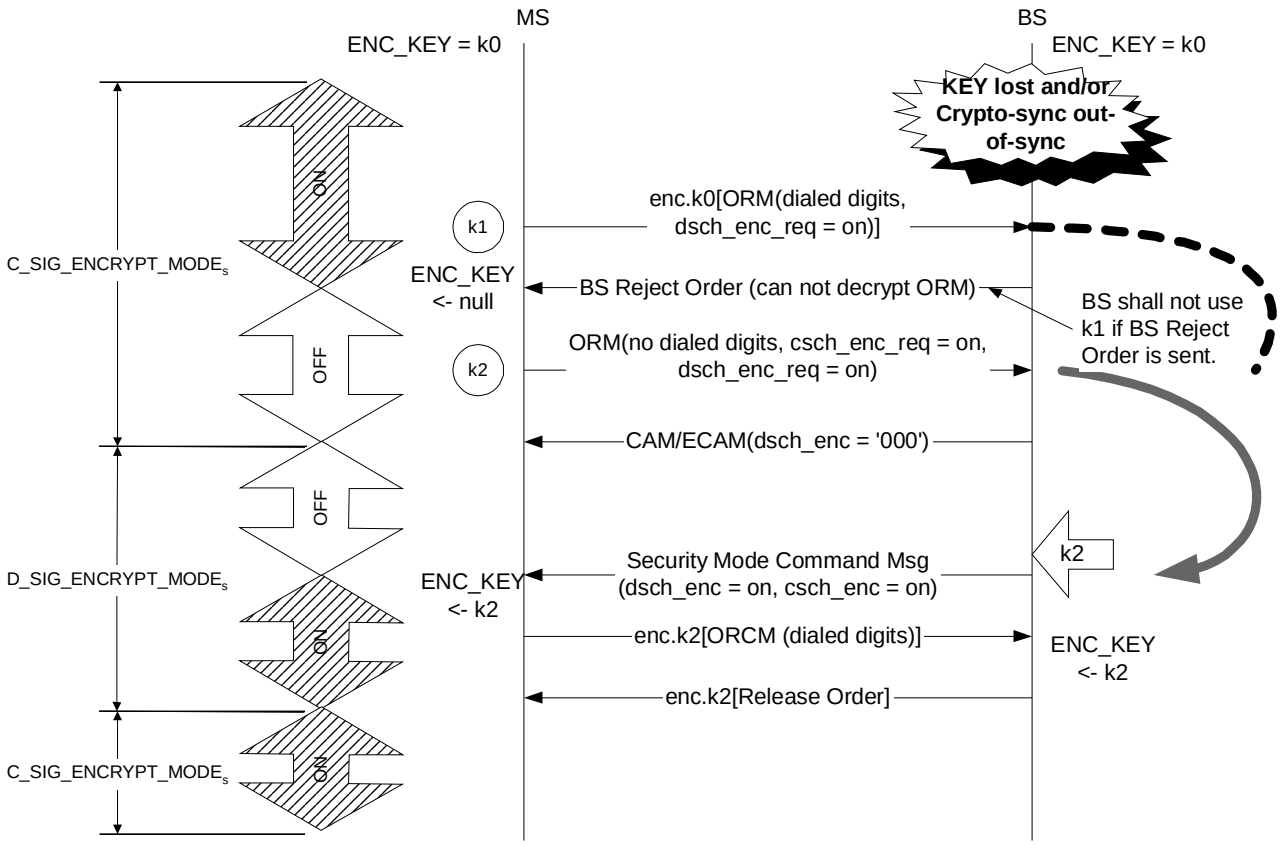

Figure G-5. BS Lost the Stored Key (A rare out-of-sync case)

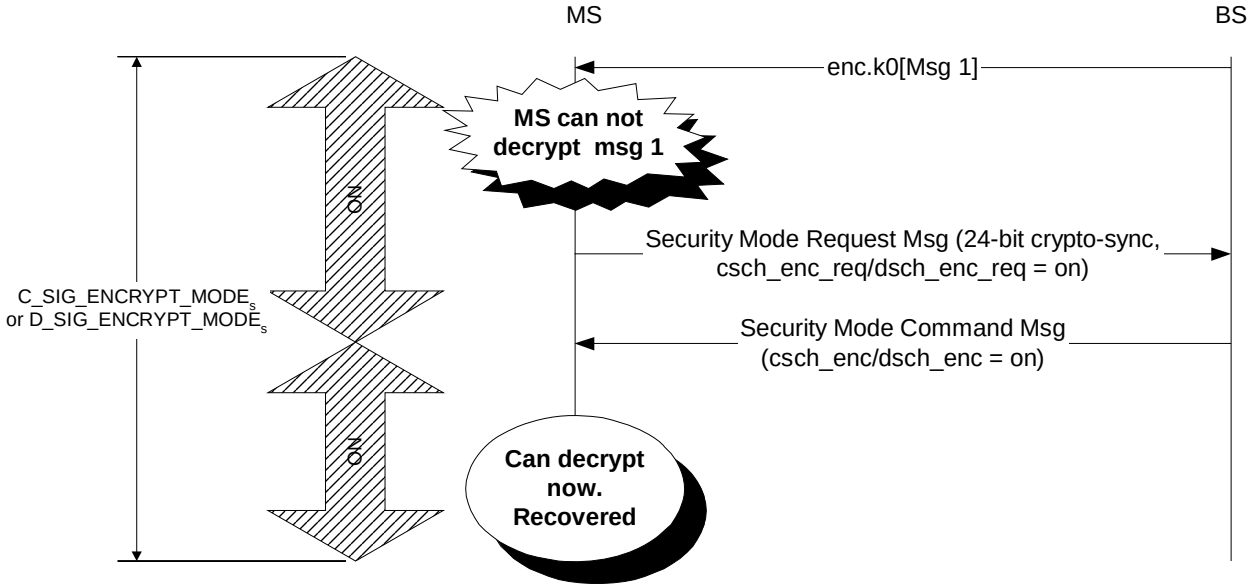

Figure G-6. MS Fails to Decrypt Messages (MS recovers by re-synchronizing the crypt-sync)

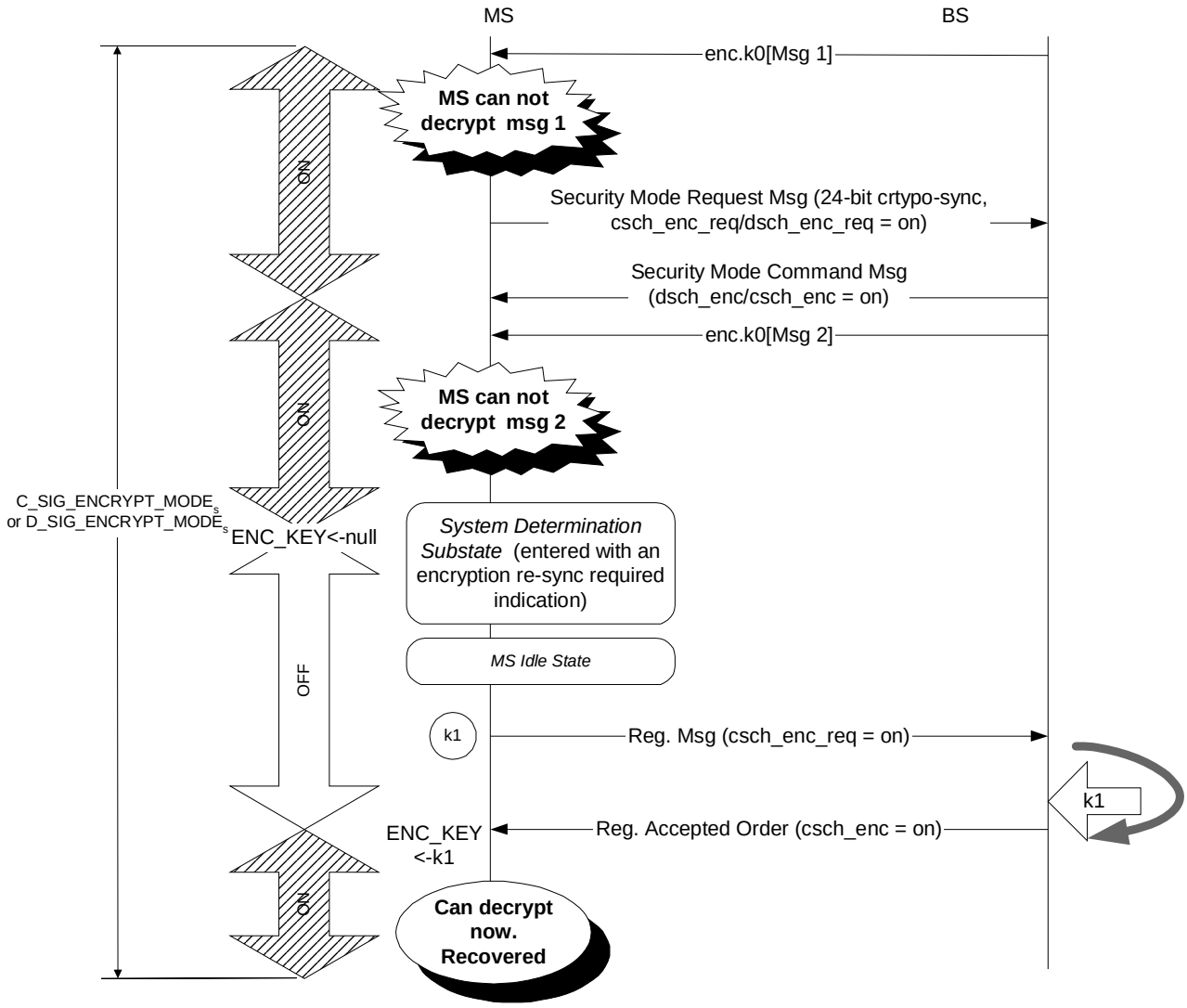

Figure G-7. MS Fails to Decrypt Messages (MS recovers by re-registering after failing to re-synchronize the crypto-sync)

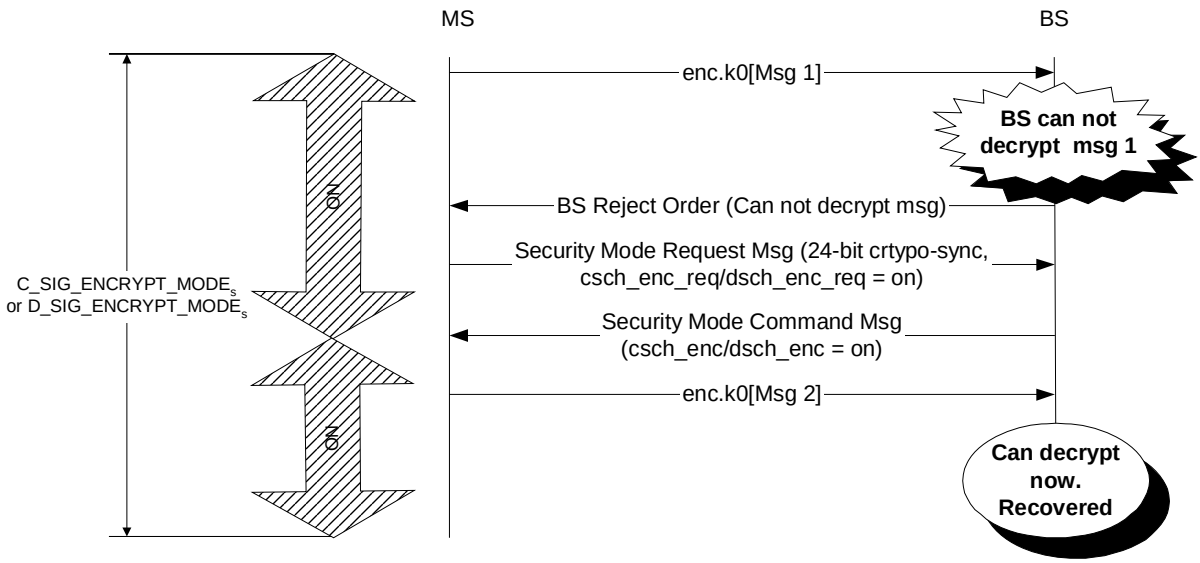

Figure G-8. BS Fails to Decrypt Messages (BS recovers by re-synchronizing the crypt-sync)

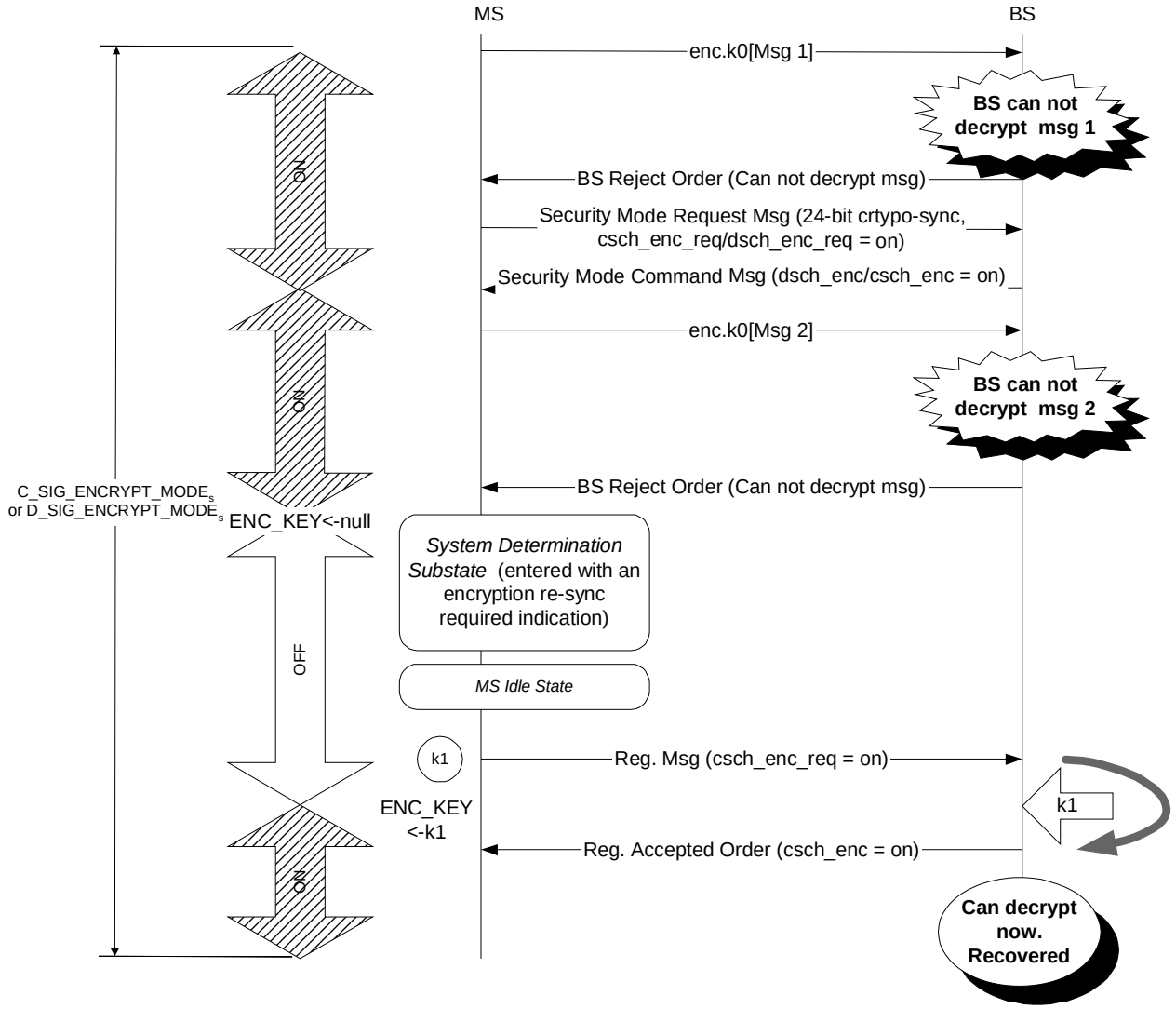

Figure G-9. BS Fails to Decrypt Messages (BS recovers by forcing the MS to re-register after failing to re-synchronize the crypto-sync)